INTERMEDIATE AREA TRANSMISSION REVIEW

OF THE

MARITIMES AREA (NOVA SCOTIA)

2013 STUDY YEAR

Approved by NPCC Reliability Coordinating Committee
2009 06 03

Studies and Analyses Conducted by: Nova Scotia Power, Inc.
Review Conducted by: NPCC Task Force on System Studies

November 12, 2008

Table of Contents

EXECUTIVE SUMMARY ..... **iii**

1. INTRODUCTION **1**

2. CHANGES IN FACILITIES AND SYSTEM CONDITIONS **2**

2.1. LOAD FORECAST 2
2.2. GENERATION RESOURCES 2
2.3. TRANSMISSION FACILITIES 3
2.3.1. In-Province Transmission *3*
2.3.2. Interconnections *3*
2.3.3. Newly-Classified Bulk Power System Elements *4*

3. STUDY PARAMETERS **5**

3.1. WINTER PEAK 2013/2014 5
3.2. SUMMER PEAK 2013 6
3.3. LIGHT LOAD 2013 7

4. STEADY-STATE ANALYSIS **9**

4.1. WINTER PEAK 2013 9
4.2. SUMMER PEAK 2013 10
4.3. LIGHT LOAD 2013 11

5. STABILITY ANALYSIS **13**

5.1. NEWLY IDENTIFIED BPS ELEMENTS 16
5.2. DOUBLE-CIRCUIT FAULT L7008 – L7009 17
5.3. DOUBLE-CIRCUIT FAULT L8004 L7005 STRAIT OF CANSO CROSSING 17
5.4. BREAKER FAILURE AT ONSLOW 345KV – LOSE L8003 + L8002 17

6. EXTREME SYSTEM CONDITION ANALYSIS **19**

7. SPECIAL SENSITIVITY STUDIES **20**

7.1. NUTTBY MOUNTAIN AT FULL LOAD IN SUMMER – RESTRICTIONS ON L5040 20
7.2. TUFT'S COVE PLANT AT FULL LOAD IN SUMMER – OVERLOAD L5003 20
7.3. REPLACEMENT OF TRENTON UNIT 5 GENERATOR AND EXCITATION SYSTEM 20
7.4. EXTENSION OF EAST – WEST TRANSMISSION LIMITS 21

8. SPECIAL PROTECTION SYSTEMS **23**

9. DYNAMIC CONTROL SYSTEM ANALYSIS **24**

10. EXTREME CONTINGENCY ANALYSIS **25**

10.1. LOSS OF THE ENTIRE CAPABILITY OF A GENERATING STATION 25
10.2. LOSS OF ALL LINES EMANATING FROM A SUBSTATION / ON A COMMON RIGHT OF WAY 25
10.3. THREE-PHASE FAULT WITH A STUCK BREAKER AT ONSLOW 345KV 25
10.4. THREE-PHASE FAULT WITH A STUCK BREAKER AT ONSLOW 345KV 25
10.5. THREE-PHASE FAULT WITH A STUCK BREAKER AT HOPEWELL 345KV 26
10.6. INTER-AREA OSCILLATION ORIGINATING OUTSIDE THE REGION 26
10.7. FAILURE OF A TYPE I SPS TO OPERATE WHEN REQUIRED 26

11. ELEMENT OUT OF SERVICE (N-1) RE-DISPATCH TESTING **27**

11.1. LOSS OF L8004 27
11.2. LOSS OF BRUSHY HILL SVC ON PEAK 29

12. WIND MODEL ISSUES 31

12.1. ACCIONA AW1500 31
12.2. ENERCON E82 31
12.3. VESTAS V90 32
12.4. PERFORMANCE DURING UNDERFREQUENCY EVENTS 32
12.5. DYNAMIC PERFORMANCE WITH HIGH WIND PENETRATION 32

13. SHORT CIRCUIT ANALYSIS 34

14. IMPACT ASSESSMENT AND OVERALL SUMMARY 35

TABLES

APPENDICES

Executive Summary

The last Comprehensive Area Transmission Review (CATR) of the Maritimes Bulk Power Transmission system was completed and subsequently approved by NPCC Inc. in March 2006 based on the test year 2011. Subsequent to that CATR, an Interim Review was conducted in 2007. This Intermediate Area Transmission Review (IATR) examines changes in installed and planned facilities and forecast load in Nova Scotia since the 2006 CATR and their effect on the reliability of the Bulk Power System in the test year 2013/2014. The Maritimes Area IATR is conducted jointly between NSPI and NB Power Transmission, who has produced a review of that portion of the Maritimes Area under the control of the New Brunswick System Operator (New Brunswick, Prince Edward Island, and Northern Maine) under separate cover.

Planned generation additions since the 2006 CATR include six wind generation facilities totaling 238 MW and a 50 MW steam turbine unit at Tuft's Cove. The NS load in the year 2013 is forecasted to be 2257 MW, which is lower than the load forecasted for the year 2011 (2504 MW) in the CATR. This forecast is largely due to Demand Side Management plan.

There are no plans for significant new transmission up to the year 2013; however the application of the new A-10 Criteria in 2007 resulted in the re-classification of 9 existing buses as Bulk Power Elements. Therefore, this IATR includes many new contingencies not previously presented in an NPCC Area Review. An implementation plan for the newly identified BPS elements has been approved by NPCC up to 2012. It is recognized that some of these elements may not meet A-2 criteria until their protection systems are upgraded to meet A-5 criteria by 2012.

This IATR presents the results of steady-state thermal and voltage as well as stability analysis in accordance with the requirements of the A-2 Criteria for various load levels and stressed interface dispatch conditions for the test year 2013. Although this review identified issues with the non-bulk part of the NS system, the 2013 Bulk Power System was found to be in compliance with NPCC A-2 criteria provided system upgrades associated with the newly-identified BPS elements are upgraded in accordance with the approved BPS Implementation Plan.

Extreme contingency analysis was conducted under the system condition requirements of C-18. No contingency resulted in significant adverse impact outside the local area.

A new non-BPS Special Protection System will be required to manage thermal overloads on the western 69kV system associated with a new 30 MW wind generation facility at Digby. The arming level of the Type I SPS #119 will be reduced to cover potential thermal overload on L7004 and L6511 if the new wind generation facilities are operating at full load at the time of a permanent loss of both circuits on the double-circuit tower Canso strait crossing (L8004 plus L7005).

There are no new Dynamic Control Systems planned for Nova Scotia. All existing Dynamic Control Systems have only local area impact, and are not expected to change for the test year.

A Fault Current Assessments for all new generation proposed for 2013 has been conducted and no circuit breakers were found to be deficient.

Extreme System Conditions were assessed to "obtain an indication of system robustness or to determine the extent of a widespread adverse system response." (Document A-2, Section 8.0). On a winter-peaking system such as NS, extreme system conditions were taken to be the high end of the winter peak forecast. This assessment concluded that the normal contingencies will only have local impacts under such extreme system conditions.

The report assessed the ability of the system to be re-dispatched following loss of critical transmission or generation, and still meet the requirements of the Transmission Design Criteria.

The studies and analyses documented in this report demonstrate that for the planned system conditions for the year 2013 the Nova Scotia Bulk Power System is in conformance with those sections of the Basic Criteria for Design and Operation of Interconnected Systems (NPCC Inc. Document A-2) that relate to the design of transmission systems.

1. INTRODUCTION

The most recent NPCC Comprehensive Area Transmission Review (CATR) of the Nova Scotia (NS) transmission system, was conducted in 2006 and approved by the Reliability Coordinating Council in March 2007, and covered the planned 2011 system conditions, [1]. This Intermediate Area Transmission Review (IATR) examines changes in planned facilities and forecasted load in Nova Scotia since the 2006 review, and their effect on the reliability of the bulk power system in the test year 2013. The scope of this review focuses on the following changes:

- The addition of six wind generation facilities totaling 238 MW, plus existing wind generation (60 MW) not previous modeled in an Area Review.
- The addition of Tuft's Cove Unit 6, a 50 MW steam turbine generator, changing the operation of units 4 and 5 into a combined-cycle unit (Tuft's Cove 4, 5, 6)
- The reclassification of nine buses and associated elements in NS as Bulk Power as a result of the implementation of the new A-10 Criteria.
- Replacement of the generator and excitation system for Trenton unit #5 (150 MW nominal).

Figure 1 shows the general layout of the Nova Scotia transmission system, 69kV – 345kV.

2. CHANGES IN FACILITIES AND SYSTEM CONDITIONS

Table 1 provides a comparison of load forecasts, generation resources and transmission facilities used in the 2006 CATR for the year 2011 and the projected changes for the year 2013.

2.1. Load Forecast

In the 2006 CATR the in-province Winter Peak load for year 2011 was forecasted to be 2504 MW, including 403 MW of interruptible load and 2101 MW of firm load. That data came from the 2006 load forecast. The 2008 load forecast (Figure 2) shows a lower load growth than forecasted in 2006, with the 2013 Coincident Winter Peak projected to be 2257 MW including 345 MW non-firm and 1911 MW of firm load. The primary reason for this reduced load forecast is an aggressive demand-side management (DSM) program begun in 2008, as well as the switch from 30-year weather average to 10-year weather average, leading to the expectation of milder winters in NS. This forecast does not reflect any impact of a global economic downturn.

Without the DSM program, load would be expected to be 2403 MW total (2028 MW firm), as shown in Figure 3A. For the purposes of this study, winter peak system conditions and without DSM are assumed. For the case of Extreme System Conditions, a higher than normal forecast, without DSM, is used, with a total system peak demand of 2564 MW with all major industrial loads curtailed. This represents a system load of 114% of the normal forecast of 2257 MW, as shown in Figure 3B.

2.2. Generation Resources

The following generation resource changes have occurred since the 2006 CATR:

- The planned uprating of Tuft's Cove Unit 1 by 20 MW has been cancelled.
- Each of the four Lingan coal-fired units is now rated at 163 MW gross.
- The addition of the 50 MW steam turbine to the Tuft's Cove units 4 and 5 gas turbines (resulting in a combined-cycle plant units 4/5/6) has been approved and is on-schedule for 2010.

In response to a request for proposals to meet the Nova Scotia Renewable Energy Standard, the following Power Purchase Agreements for a total of 238 MW have been signed by Nova Scotia Power for installation by the end of 2009:

- Amherst 30 MW wind generating facility (the Interconnection Request was originally for 36 MW but has recently been down-sized to 30 MW. Part of this study was conducted assuming 36 MW). The generators are 1.5 MW Acciona double-fed induction generators.
- Nuttby Mountain 45 MW wind generating facility, using 3 MW Vestas V90 double-fed induction generators
- Dalhousie Mountain 51 MW wind generating facility, using 1.5 MW GE double-fed induction generators.
- Glen Dhu 60 MW wind generation facility, using 2 MW Enercon fully-inverted generators.
- Digby-Rossway 30 MW wind generation facility, using 1.5 MW GE double-fed induction generators.

- Statia Terminals 22 MW wind generation facility, using 2 MW Enercon fully-inverted generators, and possibly incorporating a smaller 800 kW Enercon machine.

The location of each of these new facilities is shown on Figure 4.

2.3. Transmission Facilities

2.3.1. In-Province Transmission

The only change to the planned transmission additions discussed in the 2006 CATR is the thermal uprating of the 138kV line L6503 from Trenton to Onslow, which was completed in 2007[1]. All new generation facilities listed in this review are located at, or in close proximity to, existing transmission facilities. The 30 MW wind generation facility at Digby-Rossway will require a 10 km 69kV line to the nearest substation at Conway. The 69kV radial transmission near Digby-Rossway is not considered part of the Bulk Power System and therefore is not studied in detail in this Review (the System Impact Study has confirmed that this plant has no adverse impact on the Bulk Power System).

2.3.2. Interconnections

There are no changes to the NS-NB interconnection planned for the period up to 2013. There is a single 345kV line between Onslow (NS) and Memramcook (NB), and two 138kV lines between Springhill (NS) and Memramcook (NB). However, since there is only one 345kV line from Memramcook to Salisbury on the NB side and one 138kV line from Springhill to Onslow on the NS side, we can consider the two grids are interconnected by a single 345kV line in parallel with a single 138kV line.

The Total Transfer Capability of the interconnection is a function of any restrictions on the NS side of the border as well as on the NB side. The effective TTC is the lower of the two individual TTC values. This Review examines the impact of the addition of new generation on TTC, particularly the new wind generation on the 138kV sections of the interconnection at Amherst NS and Aulac NB.

NS and NB operate under a shared operating reserve agreement, and the NS-NB must be capable of delivering the reserve share commitment at any time. In 2008, the reserve sharing requirement is approximately 175 MW from NS to NB and 105 MW from NB to NS. This reserve-sharing capacity is considered a Transmission Reliability Margin (TRM) and is not available for commercial export transactions.

The ability of NS to send power to NB is based on the single contingency loss of the Onslow – Memramcook 345kV line (L8001/L3026). Loss of that circuit puts all export plus northern NS load (40-60 MW) on the 138kV circuit L6513, which has a summer rating of 110 MVA or lower[2]. The thermal rating of L6513 is dynamically assessed in real-time and an SPS (NPCC #130) trips one or two units to keep L6513 within its thermal limits. The export capability could be extended by adding more generation to the SPS scheme, but if export exceeds about 500 MW, then the split of power between the parallel 345kV and 138kV components of the

[1] In the 2006 CATR, the summer rating of line L6503 was exceeded for loss of L8003 in the light-load heavy transfer case. This condition has been remedied by this upgrade.
[2] If ambient temperature exceeds 25°C, the thermal rating is reduced in accordance with IEEE Standard 738-2006.

interconnection will result in L6513 being loaded to its summer rating. Therefore the Firm Export Available Transmission Capability (based on single-contingency) is approximately 60 MW in summer and 100 MW in winter. Export conditional-firm (conditional on SPS action) ATC is 175 MW based on the NSPI reserve-sharing commitment to NBSO of 175 MW.

The ability of NS to receive power from NB is a function of the effect of the loss of either the 345kV line from Salisbury to Memramcook (L3006) or Memramcook to Onslow (L8001/L3026). To prevent uncontrolled separation of the parallel 138kV system, an SPS (NPCC #15) cross-trips L6513 at Onslow. The resulting generation deficiency during import results in underfrequency load-shedding in NS. Although NS presently has three stages of UFLS (10% at 59.3 Hz, 15% at 58.8 Hz and 15% at 58.3 Hz), an operating limit is placed on scheduled imports to limit UFLS to Stage 2, for a total net loss of 25% of load for a single contingency. By limiting scheduled import to only two stages of UFLS, one final stage ensures frequency recover should any generation trip during the separation. Proposed changes to the UFLS program in NPCC must be evaluated to ensure that scheduled interchange limits continue to provide sufficient margin for single contingency.

In addition to the loss of the 345kV lines between Salisbury, Memramcook and Onslow, NS import can be limited by contingencies inside New Brunswick, particularly at times of heavy load in the Southeast NB region (Moncton load centre) and exports to Prince Edward Island. It should be noted that, in order to increase the firm NB-NS transfer capability, the transmission into Moncton from the Miramichi (L3017) and Saint John (L3013) may also need to be reinforced.

2.3.3. Newly-Classified Bulk Power System Elements

The application of the NPCC A-10 Criteria in 2007 resulted in the increase in the number of Bulk Power System buses from 10 to 19. The A-10 Implementation Plan approved by the RCC provides a grace period for these newly-classified stations to be brought into compliance with the A-5 (protection and control) Criteria, but such a grace period is not provided for application of the A-2 Criteria. Since the contingencies associated with these elements may not have been evaluated in accordance with A-2 Criteria and the B-4 Guide during the 2006 CATR, it is necessary to study a new set of contingencies in this Intermediate Review.

The newly-classified BPS elements are those which are connected to the following buses:

Hopewell 138kV	47C 138kV	Lakeside 138kV
Onslow 138kV	Burnside 138kV	Sackville 138kV
Brushy Hill 138kV	Kempt Road 138kV	Tuft’s Cove 69kV

These buses are highlighted on Figure 5. It should be noted that six of these buses (Brushy Hill, Lakeside, Sackville, Burnside, Kempt Rd., and Tuft’s Cove) are in the Halifax load centre.

Subsequent to the A-10 criteria testing conducted in 2007, System Impact Studies for the proposed Dalhousie Mountain wind generation facility (51 MW on L7004) have determined this facility to be BPS and it will be designed and operated as such.

3. Study Parameters

The basis for this IATR was the NPCC SS-37 2007 Base Case Library for Summer Peak 2013 and Winter Peak 2013. Since a Light Load case for 2013 was not prepared by SS-37, all light load studies were conducted using the SS-37 2008 Light Load base case, with the concurrence of TFSS. The changes to the NB system associated with their wind generation additions, and the new wind generation in NS was added. Included in this study is the 30.6 MW wind generating facility at Pubnico Point 69kV and the 14 MW wind generation facility at Lingan 69kV, both of which are in-service in 2008. Wind generation model data was provided by the equipment manufacturers. Issues with the models are discussed in §12.

Load model assumptions are unchanged from the 2006 CATR (see §2.3 of that report).

The functions of Special Protection Systems referenced in these studies are summarized in Table 2.

3.1. Winter Peak 2013/2014

Winter Peak base cases test the ability of the system to supply maximum system load. There are two principle concerns in this IATR for peak load conditions. The first concern is the ability to survive A-2 Criteria contingencies associated with the newly-designated BPS buses, particularly in the Halifax load centre. The second concern is the displacement of existing generation with the new wind generation. The latter concern is important because 208 MW of the new wind generation is electrically connected east of the Halifax load centre, and if economic dispatch patterns are honoured, this generation will displace the dual-fired (oil/gas) generation at Tuft's Cove units 1-3 and the combustion turbines at Burnside. This has the impact of potentially increasing east-west power flow across constrained interfaces as shown in Figure 6.

2013WP-NS-0.sav (Figure 7a, b)

NS Gross Load	2227 MW
NS Large Motor Load	66 MW
NS Transmission Losses	93 MW
NS Gross Generation	2320 MW
NS-NB transfer	0 MW
NB-NE transfer	500 MW
NB-HQ transfer	0 MW
Cape Breton Export	732 MW
Onslow Import	961 MW
Onslow South	851 MW
SPS Armed	133, 119 (1 unit for L8003, 2 units for L8004)

2013WP-DSM-NS-200.sav (Figure 8 a, b)

NS Gross Load	2408 MW
NS Large Motor Load	200 MW
NS Transmission Losses	108 MW
NS Gross Generation	2716 MW
NS-NB transfer	200 MW
NB-NE transfer	700 MW

NB-HQ transfer	0 MW
Cape Breton Export	790 MW
Onslow Import	1012 MW
Onslow South	700 MW
SPS Armed	133, 119, 130 (2 units for L8003 or L8004)

2013WP-NS-import-200.sav (Figure 9 a, b)

NS Gross Load	2360 MW
NS Large Motor Load	167 MW
NS Transmission Losses	86 MW
NS Gross Generation	2247 MW
NS-NB transfer	-200 MW
NB-NE transfer	300 MW
NB-HQ transfer	0 MW
Cape Breton Export	544 MW
Onslow Import	773 MW
Onslow South	863 MW
SPS Armed	133, 15

3.2. Summer Peak 2013

This load level (approximately 80% of Winter Peak) permits the study of various stresses on interfaces within NS and between NS and NB. Two of the east-west interfaces shown in Figure 6 are stability limited (Cape Breton Export and Onslow Import), and the limits are extended by a Type I SPS (NPCC #119). Base cases examine the impact of the new wind generation with transfers just below the arming level of the SPS, and at the limit of transfers across the interfaces. This examines the adequacy of the current SPS schemes. In addition, Summer Peak conditions permit an examination of the full range of NS-NB as well as stressed transfers from NB to NE.

2013SP-NS-0.sav (Figure 10 a, b)

NS Gross Load	1700 MW
NS Large Motor Load	200 MW
NS Transmission Losses	76 MW
NS Gross Generation	1775 MW
NS-NB transfer	0 MW
NB-NE transfer	1000 MW
NB-HQ transfer	0 MW
Cape Breton Export	590 MW
Onslow Import	852 MW
Onslow South	802 MW
SPS Armed	none

2013SP-NS-250.sav (Figure 11 a, b)

NS Gross Load	1691 MW
NS Large Motor Load	200 MW
NS Transmission Losses	71 MW
NS Gross Generation	1513 MW
NS-NB transfer	-250 MW

NB-NE transfer	1000 MW
NB-HQ transfer	0 MW
Cape Breton Export	592 MW
Onslow Import	560 MW
Onslow South	765 MW
SPS Armed	15, 133

2013SP-NS+200.sav (Figure 12 a, b)

NS Gross Load	1700 MW
NS Large Motor Load	200 MW
NS Transmission Losses	98 MW
NS Gross Generation	1998 MW
NS-NB transfer	200 MW
NB-NE transfer	1000 MW
NB-HQ transfer	0 MW
Cape Breton Export	780 MW
Onslow Import	1037 MW
Onslow South	792 MW
SPS Armed	130, 133, 119 (2 units for L8003 or L8004)

2013SP-NS+300.sav (Figure 13 a, b)

NS Gross Load	1700 MW
NS Large Motor Load	200 MW
NS Transmission Losses	94 MW
NS Gross Generation	2093 MW
NS-NB transfer	300 MW
NB-NE transfer	1000 MW
NB-HQ transfer	0 MW
Cape Breton Export	780 MW
Onslow Import	1037 MW
Onslow South	692 MW
SPS Armed	130, 133, 119 (2 units for L8003 or L8004)

3.3. Light Load 2013

This series of base cases is meant to demonstrate any potential impact on system dynamic response associated with the displacement of thermal generation with wind generation at light load, where the total amount of wind generation becomes a significant percentage of on-line generation (285/1057=27%). Since wind generation has little or no inertia, and voltage control characteristics can be significantly different than conventional synchronous generators, high penetration levels of wind generation can be a concern.

2013LL-NS-0.sav (Figure 14 a, b)

NS Gross Load	1065 MW
NS Large Motor Load	84 MW
NS Transmission Losses	43 MW
NS Gross Generation	1192 MW
NS-NB transfer	0 MW
NB-NE transfer	605 MW
NB-HQ transfer	195 MW
Cape Breton Export	480 MW
Onslow Import	582 MW
Onslow South	576 MW
Gross Trenton Generation	112 MW
SPS Armed:	none

2013LL-NS-0-notr.sav (Figure 15 a, b)

NS Gross Load	1057 MW
NS Large Motor Load	84 MW
NS Transmission Losses	51 MW
NS Gross Generation	1193 MW
NS-NB transfer	0 MW
NB-NE transfer	605 MW
NB-HQ transfer	195 MW
Cape Breton Export	580 MW
Onslow Import	584 MW
Onslow South	576 MW
Gross Trenton Generation	0 MW
SPS Armed:	none

4. Steady-State Analysis

Steady-state analysis was conducted using specific contingency scripts (IDEV) listed in Appendix A and summarized in Table 3. Contingencies were selected to test the impact of the new wind generation and the newly identified Bulk Power System elements. However, in the region of new wind generation north and east of Onslow, contingencies were not limited to Bulk Power System elements, since this new generation has the potential to stress all transmission elements regardless of BPS status.

The study process involved reading in the base case, removing the elements from service associated with the contingency, solving the load-flow, scanning New Brunswick Area 105 and Nova Scotia Area 106 for voltage and flow limit violations, and plotting the post-contingency results as a one-line diagram. The post-contingency load flow assumed constant MVA loads, consistent with the assumption that automatic distribution tap-changers have returned most loads to their pre-contingency voltage state, but without automatic tap changer action on transmission transformers (which may in fact involve operator action). Automatic Generation Control was not activated, so any increase or decrease in inter-tie flow due to changes in generation, load, or losses was not acted upon. Generator steady-state reactive power limits were enforced, with settings appropriate for the generator operating point (in other words, and generator operating above its nameplate real-power rating has a reduced reactive power capability). This method of solution represents a worst-case scenario for steady-state post-contingency analysis, in the time frame of approximately 2 minutes after the contingency.

The criteria for post-contingency system conditions include all transmission elements within 110% of the seasonal (summer or winter) normal rating and all voltages between the ranges of 0.9 to 1.1 per unit. No bus should experience a voltage deviation greater than 0.1 pu.

Pre-contingency and post-contingency steady-state results for all cases (except Extreme System Conditions) are attached as Appendices B through J:

Appendix B	Winter Peak NS-NB 0
Appendix C	Winter Peak NS-NB 200 MW
Appendix D	Winter Peak NS-NB -200 MW
Appendix E	Summer Peak NS-NB -250 MW
Appendix F	Summer Peak NS-NB 0 MW
Appendix G	Summer Peak NS-NB 200 MW
Appendix H	Summer Peak NS-NB 300 MW
Appendix I	Light Load Trenton on
Appendix J	Light Load Trenton off

4.1. Winter Peak 2013

Except for the following, all contingencies satisfied voltage and thermal limit criteria.

- **C04 – Loss of 345kV Onslow – Memramcook 345kV L8001/L3025**. Loss of this circuit while NS is importing more than 100 MW activates the SPS #15, which cross-trips the Onslow end of the 138kV line L6513, resulting in separation of NS and subsequent underfrequency load shedding. Since that action can only be presented in dynamics, it is not

- **C64 – Breaker Failure at Salisbury 345kV SA3-4 with loss of L3013 and 345kV/138kV** transformer T2 results in one 138kV bus and five radial 69kV buses in the Moncton area to drop below 0.90 per unit (lowest voltage 0.875 at Albert 69kV). The only case where this was found was the 2013 Winter Peak with NS importing 200 MW. Since the initial condition of the source of the radial circuit was 1.017 pu (Moncton 69kV), the post-contingency situation would improve with a higher tap setting on the Moncton 138kV transformer. See Figure 17.
- **C40 - Double Ckt Tower L7008/L7009**. The 230kV double circuit tower exiting the Brushy Hill substation exceeds the 5 tower limit and is now considered a normal contingency (prior to the implementation of A-10, it was not necessary to consider that all elements connected to a BPS bus be considered to be BPS, and therefore this was not a valid contingency). Simultaneous loss of these two circuits results in isolation of the southwestern non-bulk part of the system, since the two 69kV circuits L5535 and L5532 will open under overcurrent protection. The separation is shown in Figure 18 and the resulting flows are shown in Figure 19 (A, B, C).
- **C45 – Single-phase to ground fault on L5041 with failure of Breaker 91H-523**. Since the 69kV bus at Tuft's Cove does not have Breaker Failure protection, this contingency results in clearing the entire 69kV bus, with the result that local 69kV load is left connected through L5003 to 90H-Sackville, as shown in Figure 20. Protection will not operate to trip the L5003 or transformer 90H-T1 resulting in sustained overload of this non-bulk part of the system, with voltages as low as 0.78 pu. This condition was found for all Winter Peak cases studied. See Figure 21.

4.2. Summer Peak 2013

Case *2013SP-NS-250.sav* examined the impact of displacing all generation at Trenton with imports plus wind generation. East-west SPS's are just below arming level. With no generation at Trenton, contingencies that isolate Trenton 138kV bus from Hopewell Bus result in low voltage in the area and along the radial 69kV system between Trenton and Ruth Falls (non-BPS).

- **C45 – Single-phase to ground fault on L5041 with failure of Breaker 91H-523**. Since the 69kV bus at Tuft's Cove does not have Breaker Failure protection, this contingency results in clearing the entire 69kV bus, with the result that local 69kV load is left connected through L5003 to 90H-Sackville, as shown in Figure 22. Protection will not operate to trip the L5003 or transformer 90H-T1 resulting in sustained overload of this non-bulk part of the system.
- **C50 – 1 Phase fault on L6507, Breaker Failure 79N-606**. This contingency trips both 138kV lines from 79N-Hopewell and 50N-Trenton. It is similar in effect to the loss of the double-circuit tower with L6507 and L6508. The result shown in Figure 23 is low voltage on Trenton, Michelin, Glen Dhu wind plant, and eight radial 69kV buses out of Trenton towards Pictou and Sheet Harbour. Figure 24 shows the post-contingency status transformer tap changers are adjusted at 1N-Onslow and 50N-Trenton. It can be concluded that, if Trenton and Eastern Shore hydro generation are off-line, the pre-contingency voltage at 1N-Onslow 138kV and 50N-Trenton 69 kV must be held at 1.05 per unit. This will prevent voltages in this section from dropping below 0.9 per unit, but will not prevent a step change in voltage

- **C58 – breaker failure on 79N-810** trips 345kV lines L8003 and L8004 and opens both 138kV lines from Hopewell to Trenton. Bus voltages at Trenton, Michelin, and the radial 69kV system to Ruth Falls are below criteria. This is similar to C50 above. See Figure 27.
- **C61 – Double-circuit Tower at Strait of Canso Crossing** (loss of L8004 +L7005). Since the transfer level is below the SPS arming levels, this contingency results in exceeding the summer rating of the 230kV line L7004 from the interconnection point of IR084-Dalhousie Mountain wind generating plant to Onslow as well as the 138kV lines L6515 from Port Hastings to Antigonish and L6511 between the interconnection point of IR114-Glendhu wind generating plant to Trenton. Only three buses on the radial 69kV system between Trenton and Ruth Falls drop below 0.90 pu. See Figure 28. If the SPS arming level is reduced, a unit at Lingan would be tripped following this contingency, eliminating the overloads as shown in Figure 29.

Case *2013SP-NS+300.sav* examined the impact of maximum NS export (simulating the delivery of reserve from NS to NB). East-west SPS's are armed such that any contingency that results in the loss of L8003 or L8004 triggers generation rejection of two units at Lingan (300 MW). Since export is above 220 MW, therefore the loss of L8001 (Onslow – Memramcook 345kV) results in the rejection of two Lingan units (300 MW) via SPS #130. Loss of L3006 Memramcook – Salisbury does not require SPS action. Case *2013SP-NS+200.sav* is similar to the previous case except that, since NS exports is below 220 MW, loss of L8001 (Onslow – Memramcook 345kV) results in the rejection of one Lingan unit (150 MW) via SPS #130.

Results for these two cases are similar, with the following notable results:

- **C22 – Loss of L6538 with both Wreck Cove units at full load** results in exceeding the summer rating of L6537 by up to 37% (limit exceeded by 17%), as shown in Figure 30. A similar overload condition exists for loss of either of the Glen Tosh to Wreck Cove 138kV circuits L6545 or L6549. Operator action is required to run-back the Wreck Cove hydro units if any of these contingencies occur. Since the average summer capacity factor of Wreck Cove is less than 15% as shown in Figure 31, this means that the total net output of Wreck Cove exceeds summer limit for single contingency about 40 hours per year (0.46% of the time). Since the Wreck Cove plant is remotely controlled by the NSPI System Operator at the Energy Control Centre, this is presently considered to be an acceptable risk for a non-BPS element.
- **C45 – Single-phase to ground fault on L5041 with failure of Breaker 91H-523**. Since the 69kV bus at Tuft's Cove does not have Breaker Failure protection, this contingency results in clearing the entire 69kV bus, with the result that local 69kV load is left connected through L5003 to 90H-Sackville, as shown in Figure 32. Protection will not operate to trip the L5003 or transformer 90H-T1 resulting in sustained overload of this non-bulk part of the system. Although no post-contingency bus voltages drop below 0.90 pu, two 69kV buses experience a change in voltage of just over 10%.

4.3. Light Load 2013

Except for the following, all contingencies satisfied voltage and thermal limit criteria.

- **C45 – Single-phase to ground fault on L5041 with failure of Breaker 91H-523**. Since the 69kV bus at Tuft's Cove does not have Breaker Failure protection, this contingency results in clearing the entire 69kV bus, with the result that local 69kV load is left connected through L5003 to 90H-Sackville, as shown in Figure 33. Protection will not operate to trip the L5003 or transformer 90H-T1 resulting in sustained overload of this non-bulk part of the system. No post-contingency bus voltages drop below 0.90 pu, and no buses experience a change in voltage of over 10%.
- **C61 – Double-circuit Tower at Strait of Canso Crossing** (loss of L8004 +L7005). Since the transfer level is below the SPS arming levels (in case *2013LL-NS-0-notr.sav* only), this contingency results in exceeding the summer rating of the 230kV line L7004 from the interconnection point of IR084-Dalhousie Mountain wind generating plant to Onslow as well as the 138kV lines L6515 from Port Hastings to Antigonish and L6511 between the interconnection point of IR114-Glendhu wind generating plant to Trenton. In this case, no bus voltages drop below 0.90 pu or experience a change in voltage greater than 0.1 pu. Figure 34 shows the overload of these circuits with the current setting of the SPS #119, and Figure 35 shows that the loading is relieved if the SPS arming level is reduced by 100 MW.

5. Stability Analysis

Stability analysis was conducted using specific contingency scripts (IDEV) listed in Appendix K. Contingencies were selected to test the impact of the new wind generation and the newly identified Bulk Power System elements. Detailed line relay models were included for the NS and NB 230kV and 345kV system, with the addition of models for significant (stressed) 138kV lines, regardless of BPS status. Stability files are coded to group the types of contingencies listed in §5.1 of NPCC A-02 Criteria Document:

Type A (*a07.2*, *a101*)	Three-phase fault on any transmission line, transformer, or bus section, cleared in normal time.
Type B (*b06*, *b102*)	Permanent phase to ground fault on any transmission line, transformer or bus section with delayed clearing (assumes local breaker failure and activation of Breaker Backup scheme)
Type C (*c01*, *c101*)	Permanent phase-phase-ground fault on both circuits of a double circuit tower, both cleared in normal time.
Type D (*d03*)	Permanent phase-ground fault on any circuit breaker, cleared in normal time
Type G (*g101*)	Phase-ground bus fault with failure of a circuit breaker initiated by an SPS
Many contingencies have the potential to trigger an SPS if the base-case flow is above a particular arming level. Such cases are therefore run with SPS tripping of a single unit (case ending in “s”, as in *b04s*) or tripping of two units (case ending in “ss”, as in *b04ss*)	
Contingencies representing failure of primary protection (see §5.1) end in “F” as in *a120F*.	

The base cases used for stability analysis were based on the more stressed cases used in the steady-state analysis.

2013WP-NS-0.sav

NS Gross Load	2227 MW
NS Large Motor Load	66 MW
NS Transmission Losses	93 MW
NS Gross Generation	2320 MW
NS-NB transfer	0 MW
NB-NE transfer	500 MW
NB-HQ transfer	0 MW
Cape Breton Export	729 MW
Onslow Import	955 MW
Onslow South	845 MW
SPS Armed	133, 119 (1 unit for L8003, 2 units for L8004)

2013WP-DSM-NS-200.sav

NS Gross Load	2408 MW
NS Large Motor Load	200 MW
NS Transmission Losses	108 MW
NS Gross Generation	2716 MW
NS-NB transfer	200 MW
NB-NE transfer	700 MW
NB-HQ transfer	0 MW
Cape Breton Export	786 MW
Onslow Import	1004 MW
Onslow South	693 MW
SPS Armed	133, 119, 130 (2 units for L8003 or L8004)

2013WP-NS-import-200.sav

NS Gross Load	2360 MW
NS Large Motor Load	167 MW
NS Transmission Losses	86 MW
NS Gross Generation	2247 MW
NS-NB transfer	-200 MW
NB-NE transfer	300 MW
NB-HQ transfer	0 MW
Cape Breton Export	544 MW
Onslow Import	773 MW
Onslow South	864 MW
SPS Armed	133, 15

2013SP-NS-0.sav

NS Gross Load	1700 MW
NS Large Motor Load	200 MW
NS Transmission Losses	76 MW
NS Gross Generation	1775 MW
NS-NB transfer	0 MW
NB-NE transfer	1000 MW
NB-HQ transfer	0 MW
Cape Breton Export	590 MW
Onslow Import	852 MW
Onslow South	802 MW
SPS Armed	none

2013SP-NS-250.sav

NS Gross Load	1691 MW
NS Large Motor Load	200 MW
NS Transmission Losses	71 MW
NS Gross Generation	1513 MW
NS-NB transfer	-250 MW
NB-NE transfer	1000 MW
NB-HQ transfer	0 MW
Cape Breton Export	589 MW

Onslow Import	554 MW
Onslow South	754 MW
SPS Armed	15, 133

2013SP-NS+200.sav

NS Gross Load	1700 MW
NS Large Motor Load	200 MW
NS Transmission Losses	98 MW
NS Gross Generation	1998 MW
NS-NB transfer	200 MW
NB-NE transfer	1000 MW
NB-HQ transfer	0 MW
Cape Breton Export	780 MW
Onslow Import	1037 MW
Onslow South	792 MW
SPS Armed	130, 133, 119 (2 units for L8003 or L8004)

2013LL-NS-0.sav

NS Gross Load	1065 MW
NS Large Motor Load	84 MW
NS Transmission Losses	43 MW
NS Gross Generation	1192 MW
NS-NB transfer	0 MW
NB-NE transfer	605 MW
NB-HQ transfer	195 MW
Cape Breton Export	477 MW
Onslow Import	588 MW
Onslow South	576 MW
Gross Trenton Generation	112 MW
SPS Armed:	none

2013LL-NS-0-notr.sav

NS Gross Load	1057 MW
NS Large Motor Load	84 MW
NS Transmission Losses	51 MW
NS Gross Generation	1193 MW
NS-NB transfer	0 MW
NB-NE transfer	605 MW
NB-HQ transfer	195 MW
Cape Breton Export	580 MW
Onslow Import	584 MW
Onslow South	576 MW
Gross Trenton Generation	0 MW
SPS Armed:	none

Results of the stability analysis are summarized in Table 4. Swing curves for each case are available in the following Appendices L through S:

Appendix L	Winter Peak NS-NB 0
Appendix M	Winter Peak NS-NB +200 MW
Appendix N	Winter Peak NS-NB -200 MW
Appendix O	Summer Peak NS-NB 0 MW
Appendix P	Summer Peak NS-NB -250 MW
Appendix Q	Summer Peak NS-NB +200 MW
Appendix R	Light Load Trenton on
Appendix S	Light Load Trenton off

5.1. Newly Identified BPS elements

The newly identified BPS elements do not presently have dual high-speed protection systems. Instead they use primary and secondary with permissive. In accordance with A-2 Criteria, stability must be maintained with both primary and secondary protection, assuming that the two schemes do not have elements in common. Since these stations have only one station battery, and failure of that battery produces the same result as tested for the A-10 Criteria, we know that these newly identified elements will not meet A-2 Criteria if the station battery is the element that fails. Further analysis with that assumption is therefore redundant. However, if the Primary (high-speed) protection fails, then secondary protection clears near end (zone 1) in 6 cycles and remote end (zone 2) in 27 cycles. Because Zone 1 is typically 80% of the line, faults are simulated with the following steps:

1. 3-phase zero-impedance fault applied to Bus A at time t=0.
2. Run with fault on for 6 cycles.
3. Fault cleared, circuit from Bus A to Bus B tripped.
4. 3-phase fault applied to Bus B with fault impedance of 0.8 * impedance of circuit from Bus A to Bus B in ohms.
5. Run with remote-end fault for additional 21 cycles (27 cycles total).
6. Clear all faults.
7. If reclosing is used, apply 3-phase fault at Dead-Line reclosing end, fault impedance as (1) or (4).

In the case of 138kV BPS elements near Tuft's Cove (associated with Sackville, Burnside, Kempt Road, Lakeside, and Brushy Hill), the lines are short enough that the remote-end impedances is low, resulting in local instability for a clearing time of effectively 27 cycles for a three phase fault.

Figure 36 show that a delayed clearing fault (failure of primary protection) on L6014, with a three phase fault at the Kempt Road end, results in instability of the Tuft's Cove plant, which results in the separation of NS from NB and continued pole-slipping of Tuft's Cove units (machines outside NS are stable and well damped after NS separates. Figure 37 shows that if the Tuft's Cove units are tripped at 1 second by unit protection, NS still separates from NB, but units inside NS are more stable. Clearly this is an unacceptable result. Figure 38abc and 39abc show that high speed protection is needed for this contingency. This means that as the A-10 Implementation Plan

upgrades the protection on these transmission elements, dual high-speed schemes are required for the following lines:

L6003	L6007
L6009	L6014
L6040	L6042

It should be noted that some of the BPS stations (identified prior to the development of A-10 Criteria) fall under §1.1.2.1 of the A-5 Criteria, and do not have dual high-speed protection system or dual station batteries. It is therefore assumed that the clause in A-2 "For each of the contingencies below that involves a fault, stability shall be maintained when the simulation is based on fault clearing initiated by the "system A" protection group, and also shall be maintained when the simulation is based on fault clearing initiated by the "system B" protection group" does not imply that there is a failure of a single station battery or other common protection element if such elements fall under the A-5 "grandfather clause".

5.2. Double-circuit Fault L7008 – L7009

As discussed in §4, the 230kV lines between Brushy Hill and Bridgewater share a common tower for approximately 5 km out of the Brushy Hill Substation. Since these circuits are now considered Bulk Power Elements in accordance with A-10 Criteria (Brushy Hill 230kV bus is BPS, and "all elements connected to it shall be considered BPS"), this becomes a new contingency for NPCC Area Reviews. L7008 and L7009 are the only lines from the Halifax area to the Western area, because the 138kV line L6002 is operated Normally Open at Westhaver's Elbow. The Western area is connected through weak 69kV circuits to the Valley area at Gulch and Sissiboo. It is expected that if the Western Area becomes disconnected from the Halifax area via loss of the double circuit tower carrying L7008 and L7009, the circuits to the Valley area will trip. Figure 40abc shows the impact on the system with loss of this radial part of the NS non-bulk power system.

5.3. Double-circuit Fault L8004 L7005 Strait of Canso Crossing

As discussed in §4.2, load flow contingency C61 results in thermal overload of L7004 and L6511 if the flow is just below the arming level of the SPS. Figure 41 shows that there are no stability issues with this flow, and Figure 42 shows the dynamic response at maximum east-west transfer level with two units rejected by the SPS #119.

5.4. Breaker Failure at Onslow 345kV – Lose L8003 + L8002

This contingency is often found to be the most severe on the system, and at an Onslow Import level above 1000 MW and below the limit of 1050 MW requires two Lingan units to be tripped by SPS #119. The summer peak case with NS-NB export of 200 MW demonstrates this contingency, with dynamic results shown in Figure 43abc. It is important that with these transfer levels, there is sufficient dynamic reactive power reserve available in the Halifax area.

It should also be noted that both L8003 and L8002 have Single-Pole Auto-Reclose (SPAR). The normal assumptions for this contingency is that the permanent single-phase to ground fault occurs on one of the transmission lines, and in that case the two healthy phases of the faulted line would

continue to carry power until the high-speed reclose attempt fails (800ms) and the line trips three-pole remotely and a single-phase breaker sticks at the Onslow end, resulting in the delayed tripping of the other line. This contingency was studied without the assumptions of SPAR, which would be the case if the fault occurred on the bus section at the Onslow node of L8002 and L8003.

6. Extreme System Condition Analysis

Then intent of assessing the NS system under extreme conditions is "…to obtain an indication of system robustness or to determine the extent of a widespread adverse system response."[3]

Since NS is a winter-peaking system, these Extreme System Conditions are assumed to occur when ambient temperatures are much lower than expected for normal winter peak cases. Since normal winter rating of transmission equipment is based on an ambient temperature of 5°C, equipment thermal capability for Extreme System Conditions would actually be higher than normal winter rating. By contrast, summer-peaking systems would be studied with peak loads associated with very high ambient temperatures (and subsequent reduction in equipment ratings from "normal" ratings) . It is assumed under these conditions that some non-firm load will be curtailed, either voluntarily via the Real Time Pricing rate, or through invocation of interruptible load operating rules.

The case *2013XP.sav* represents a 14% increase over the base load forecast of 2303 MW and was used for Extreme System Condition testing. To provide the capacity to serve this load (assuming all wind generation is at full load on peak), non-firm load is curtailed. This means that the total load of 2564 MW is 126% of the firm load used in the rest of this review. At that load level, there are some pre-contingency flows that exceed the normal rating of some radial and distribution equipment. No attempt was made to address those loading issues, since load may be balanced at the distribution level to relieve these loads, or some loss of life of distribution transformers may be accepted for brief periods (although if temperatures are below -20ºC this may not be an issue for equipment). The load flow conditions are summarized:

2013XP.sav (Figure 44ab)	
NS Gross Load	2564 MW
NS Large Motor Load	0 MW
NS Transmission Losses	112 MW
NS Gross Generation	2675 MW
NS-NB transfer	0 MW
NB-NE transfer	500 MW
NB-HQ transfer	0 MW
Cape Breton Export	810 MW
Onslow Import	1001 MW
Onslow South	853 MW
SPS Armed	133, 119 (2 unit for L8003, 2 units for L8004)

It should be noted that reactive power reserve in the Halifax Area is below acceptable levels, and NS is drawing more than its share of line charging reactive power from New Brunswick (-88 Mvar) across L8001. As expected the load flow for contingency C57, breaker 67N-812 failure at Onslow 345kV which removes L8003 plus L8002, would not solve even with the two-unit SPS #119 armed. Sensitivity studies showed that approximately 200 Mvar of reactive support at Onslow 230kV bus would be required to reach a load flow solution. Figures 45 and 46 show this effect pre-contingency and post-contingency respectively. In addition, contingency C45, breaker failure at Tuft's Cove 69kV bus, causes voltage collapse and would not solve in load flow.

[3] Section 8.0 of NPCC Inc. A02 Document.

Steady-state results of Extreme System Condition Analysis are shown in Appendix T and stability analysis results are shown in Appendix U (summarized in Table 4).

7. Special Sensitivity Studies

There are two cases of interest arising from the Feasibility Studies and System Impact Studies conducted for new generation that are not evident in the base cases selected, and require sensitivity analysis to identify system issues.

7.1. Nuttby Mountain at Full Load in Summer – restrictions on L5040

Nuttby Mountain wind generating plant is rated 45 MW, consisting of 15 Vestas V90 (3.0 MW) units on a 34.5kV collector system. It is interconnected with the NS grid via a simple line tap on the radial 69kV circuit L5040 from 1N-Onslow to 4N-Tatamagouche. L5040 is designed to a conductor temperature of 50°C (sag-limited) using 336.4 kcmil Linnet ACSR. The normal summer rating of L5040 (25°C ambient, 2 ft/sec. wind speed) is 41 MVA. Although the output from the wind generating plant will split towards Tatamagouche, minimum load at that substation is only 2 MVA, and the remainder of the plant output will flow towards Onslow. Assuming 1 MW of losses in the wind generating plant collector system and transformers, line L5040 would be at or above its summer rating with the wind generating plant at full load. The wind generating plant is on the top of a mountain, and L5040 is in a deep valley below the mountain, so there will not be a close relationship between wind speed at the generation source and wind speed across the 69kV circuit. Since the wind developer has applied for Energy Resource Interconnection Service, he has effectively agreed to be curtailed when transmission capacity is not available. The transmission line will be monitored and curtailment will be implemented particularly when the line loading exceeds rating and local ambient temperature exceeds 25°C.

7.2. Tuft's Cove Plant at Full Load in Summer – overload L5003

The addition of Unit #6 at Tuft's Cove brings the total net demonstrated capability at that plant to 469 MW. If all generation at Tuft's Cove is on-line during the summer, the thermal ratings of the non-bulk power 69kV line from Sackville to Farrell St. (L5003) would be exceeded for the loss of the double-circuit tower L6003/L6009 or L6003/L6007, as shown in Figures 47, 48 and 49. At lower load levels, the overload would be greater. However, Tuft's Cove has historically not run at full load in the summer for load levels below 75% of peak (1700 MW). Line L5003 is currently restricted by the rating of the switches at Akerley Boulevard and Farrell St. If these switches were uprated to match or exceed the thermal capacity of the conductor (which is sag-limited to 55 degrees in summer), then the loading on the line would be an acceptable 10% over its summer normal rating. At lower levels of load, where the line loading would be higher at maximum Tuft's Cove output, operating restrictions will be used. It should be noted that this contingency issue pre-dates the addition of Tuft's Cove Unit #6, and is the result of the newly designated BPS elements L6003, L6007 and L6009 to which NPCC A-2 criteria now applies, whereas double-circuit tower faults are not considered in the NSPI Design Criteria.

7.3. Replacement of Trenton Unit 5 Generator and Excitation System

Trenton Unit #5 was built in the mid 1960's and is undergoing replacement of the generator. Because the previous excitation system was an induction motor / dc generator set (Westinghouse

Mag-a-Stat), it is slow and unreliable. In fact, all system studies are conducted with the assumption that the exciter for Trenton Unit 5 is operating with manual excitation (AVR model is disabled). The new generator will have a state of the art high-speed static exciter (EXST1) and Power System Stabilizer (PSS2A).

A sensitivity case was run do demonstrate the positive impact of this generator replacement. Figure 50 compares the Trenton 5 MW swing to the same disturbance (contingency a10 – 3 phase fault on L6503 at 50N-Trenton) with the original model and the proposed new generator model. Response is noticeably quicker and damping is better with the new model.

7.4. Extension of East – West Transmission Limits

Figure 6 shows the potential increase across existing transmission interfaces associated with the addition of new wind generation in NS. These increases, particularly 132 MW across the Onslow Import interface and 212 MW across the Onslow South Interface will occur if all wind generation is operating at maximum output simultaneously, and the wind generation displaces generation in the Halifax load centre. Figure 51 shows the expected aggregate generation duration curve of all wind generation in Nova Scotia for the period 2013. Figure 52 shows the generation duration curve for a single typical wind generating plant. From these plots it can be seen that there is a low probability that all wind generators operate at full load simultaneously, and is likely to occur less than 5% of the time in a localized area. Nevertheless, the transmission analysis conducted in this IATR assumes that all wind generation is operating at full load for each of the loading scenarios.

If the assumption that any new generation added to the system will displace the most expensive generation on the system, then economic dispatch principles would expect that Burnside and Tuft's Cove generation would be displaced first. The Onslow Import limit of 1050 MW is based on the most limiting contingency b06ss "single-phase fault on L8003 with failure of breaker 67N-812" coupled with the operation of SPS #119 which rejects two Lingan units (300 MW of generation). In this review the base case *2013SP-NS+200.sav* represented near-maximum flows across the Onslow Import and Onslow South interfaces. In that case, the only generation on-line in Halifax is Tuft's Cove 3 at 133 MW, as shown in Figure 53ab. Load at 47C is 179 MW. If 47C load is reduced in this case by 140 MW, and economic dispatch is applied, then Tuft's Cove generation would be taken off line (analysis ignores reserve requirements), as shown in Figure 54ab. Onslow Import is at 1173 MW and Onslow South is at 922 MW. To sustain voltage in Halifax at these transfer levels, the Brushy Hill SVC went from 0 Mvar to 70 Mvar. If the Brushy Hill SVC had unlimited reactive capability, the contingency b06ss (still with two unit SPS rejection) would require approximately 275 Mvar as shown in Figure 55ab. However, under these flow conditions flow on L6001 (Onslow – Elmsdale) exceeds its summer rating by 12% (122% of long-term rating). To keep flows on L6001 within its summer rating, the Onslow South flow should be kept below 850 MW as shown in Figure 56ab.

The conclusion of this sensitivity analysis is that only slightly more generation in the Halifax load center could be displaced with the addition of more reactive power between Onslow and Halifax in summer before the thermal limits of L6001 are exceeded, but if thermal ratings are not a significant factor, as is the case in Winter, then the addition of reactive power at Onslow or Brushy Hill can significantly increase the flow across these interfaces. At some point the rating of L6503 becomes a limiting factor due to the rating of the switchgear at 50N-Trenton, which can be replaced to match the rating of the conductor.

Steady-state results are shown in Appendix V. Contingency C57ss is the breaker 67N-812 failure at Onslow 345kV resulting in the loss of both L8003 and L8004. In spite of the activation of SPS #119 which trips two Lingan units, the load flow would not solve. Appendix W shows the dynamic results of selected contingencies. Although the contingency C57/b06 is stable in dynamics, the Onslow voltage dips quite low post-fault, which is consistent with the steady-state results with constant MVA load models.

8. Special Protection Systems

The 2006 CATR studied the Breaker Failure SPS at Lingan which is designed to prevent instability for a permanent single-phase ground fault on either L7012 or L7014 with a failure of the circuit breaker 88S-723 shared by both circuits. Action taken by the Type I SPS #130 was found to be ineffective, and the recommended action was to reduce the breaker failure time delay, which was reported in the 2007 Interim Review.

All SPS's studied in this IATR met the performance functions for which they are intended. A System Impact Study for the 30 MW wind generation facility on the western 69kV (non-bulk power) transmission system at Digby Rossway has identified the need for a generation rejection SPS to prevent overloading local 69kV circuits for certain contingencies. This SPS is expected to be classified as Type III and will be brought to NPCC in 2009.

Steady-state contingency C61 – Double Circuit Fault on L8004/L7005 at Strait of Canso was found to result in overload of L7004 and L6511 if wind generating plants at Dalhousie Mountain and Glen Dhu are operating at full load while the Cape Breton Export interface is operating just below the current arming level of SPS #119. It is proposed that this SPS arming level be reduced by 100 MW to prevent this overload.

The Onslow Import Interface used to arm SPS's is meant to reflect power received at 67N-Onslow on L8003, L7003, L7004, and L7005 plus L6503 at 1N-Onslow. Presently some of these lines are monitored at the sending end, not the receiving end, and the addition of the IR082 Dalhousie Mountain wind generation facility on L7004 will make the correction of this metered interface mandatory.

9. Dynamic Control System Analysis

No new Dynamic Control Systems (DCS) are confirmed for NS. All existing and planned DCSs in Nova Scotia have only local area impact, and are not expected to change for the year 2013, unless the Onslow – South interface is reinforced using a new Static Var Compensator at Onslow or Halifax, as discussed in §7.3 .

10. Extreme Contingency Analysis

Extreme Contingency Analysis was conducted with the stressed winter peak case *2013WP-NS-0.sav*. Figures 57 and 58 demonstrate that the Cape Breton Export and Onslow South interfaces in this case are consistent with the C-18 Document *Procedure for Testing and Analysis of Extreme Contingencies* in that they are "at least 75% of the historical or expected maximum transfer on a flow duration basis up to the maximum operating limit for the interfaces being tested".

Results of Extreme Contingency Analysis are attached as Appendix X.

10.1. Loss of the Entire Capability of a Generating Station

In this case, Tuft's Cove is operating at a total of 391 MW. Figure 59 shows the dynamic results are stable and well damped. Figure 60ab shows the post-contingency load flow conditions are within limits.

10.2. Loss of All Lines Emanating from a Substation / on a Common Right of Way

The most significant substation for this test case is Brushy Hill 230kV / 138kV. Figure 61 shows the dynamic results are stable and well damped. Figure 62ab shows the post-contingency load flow conditions after a major part of the NS is isolated by the contingency, and elements are within limits.

10.3. Three-phase Fault with a Stuck Breaker at Onslow 345kV

A three phase fault is placed on L8001 at the Onslow 345kV terminal. The line opens at the Memramcook end and breaker 67N-815 at Onslow open in 4 cycles. One pole of breaker 67N-814 fails to open (independent pole operation). The fault continues as a single-phase fault for another 10 cycles until the fault is cleared by opening of all three poles of breaker 67N-813 which trips transformer 67N-T81. Figure 63 shows that results are stable and well damped. Figure 64ab shows the post-contingency load flow conditions are within limits.

10.4. Three-phase Fault with a Stuck Breaker at Onslow 345kV

A three phase fault is placed on L8003 at the Onslow 345kV terminal. The line opens at the Hopewell end and breaker 67N-811 at Onslow open in 4 cycles. One pole of breaker 67N-812 fails to open (independent pole operation). The fault continues as a single-phase fault for another 10 cycles until the fault is cleared by opening of all three poles of breaker 67N-813 which trips line L8002 to Lakeside. Figure 65 shows that L6503 trips on swing at 0.792 seconds, followed by low-voltage tripping of wind generating plant IR084-Dalhousie Mountain (50 MW) at 1.256 seconds, and cascading tripping of the three 230kV lines from Onslow to Port Hastings (1.37s to 1.4s). This isolates eastern NS with a net deficiency to the interconnected system of 950 MW, resulting in the separation of Nova Scotia from New Brunswick at approximately 2 seconds. Although NS does not survive the frequency decline as an island, the interconnected system remains stable and well damped. Figure 66ab shows the post-contingency load flow conditions for NB and NE are within limits.

10.5. Three-phase Fault with a Stuck Breaker at Hopewell 345kV

A three phase fault is placed on L8004 at the Hopewell 345kV terminal. The line opens at the Woodbine end opens in 5 cycles. One pole of breaker 79N-810 fails to open (independent pole operation). The fault continues as a single-phase fault for another 10 cycles until the fault is cleared by opening of all three poles of breaker 79N-803 which trips transformer 79N-T81 and Line L8003. SPS #130 trips one Lingan Unit. Figure 67 shows the dynamic results are stable and well damped. Voltage at Orrington 345kV swings less than 3% and voltage at Salisbury does not swing below 0.92 pu. Figure 68 shows the post-contingency load flow conditions are within limits.

10.6. Inter-Area Oscillation Originating outside the Region

An attempt was made to initiate a large-scale system oscillation on the system by suddenly tripping all generation at Millstone (about 2000 MW). Figure 69[4] shows the NS system is stable and well damped for this contingency.

10.7. Failure of a Type I SPS to Operate when Required

Several of the contingencies for which SPS #119 was required to operate and trip one Lingan unit for this dispatch pattern were studied and reported in §5. Figure 70 is a 3-phase fault on L8003 at Onslow for which one unit is expected to be tripped by SPS #119 but fails. Figure 71 is a single-phase fault on L8003 near Onslow with failure of breaker 67N-712 resulting in the delayed clearing of L8002 plus L8003. The SPS #119 is expected to trip one Lingan unit, but fails to operate. These samples show stable and damped operation for this test case.

[4] Note that the Stora machine is off-line, so relative angle (Stora – Darlington) shows an inconsequential drift.

11. Element out of Service (N-1) Re-dispatch Testing

The Basic Criteria for Design and Operation of Interconnected Power Systems (NPCC Inc. Document A-2) requires transmission systems to be designed with sufficient transmission capability to be able to serve forecasted loads under the conditions listed in §5.1 and §5.2 of NPCC Inc. Document A-2 (known as the "single contingency criteria").

NPCC A-2 Transmission Design Criteria (§5.0) also require that:

"These criteria will also apply after any critical generator, transmission circuit, transformer, series or shunt compensating device or HVdc pole has already been lost, assuming that the Area generation and power flows are adjusted between outages by the use of ten-minute reserve and where available, phase angle regulator control and HVdc control."

Similarly, NPCC A-2 Transmission Operating Criteria (§6.3) require that:

"Immediately after the occurrence of a contingency, the status of the bulk power system must be assessed and transfer levels must be adjusted, if necessary, to prepare for the next contingency. If the readjustment of generation, load resources, phase angle regulators, and direct current facilities, is not adequate to restore the system to a secure state, then other measures such as voltage reduction and shedding of firm load may be required. System adjustments shall be completed as quickly as possible, but in all cases within 30 minutes after the occurrence of the contingency".

The Transmission Design Criteria implies that the only permissible methods of adjusting generation and power flows to prepare for subsequent contingencies is through the use of ten-minute reserve, if phase-angle regulation and HVdc controls are not available. This statement is not consistent with the Transmission Operating Criteria, which does not place restrictions on how the power system is to be prepared for the next contingency, only that it must be done within 30 minutes. In Nova Scotia, for example, ten-minute reserve can only be used to replace lost generation and not for loss of a "critical transmission circuit, transformer, series or shunt compensator". NSPI has developed Type III SPS's

(#113, #170) that are only enabled when critical transmission elements are out of service. The system can be re-dispatched in accordance with the conditions at the time of the first contingency, based on operating instructions developed by Operations Planners. Operators may curtail non-firm export transactions or non-firm in-province load in response to the loss of a critical transmission element.

The following are examples of how NS meets this component of the A-2 Criteria.

11.1. Loss of L8004

With the loss of this section of the backbone 345kV transmission, east-west transfers must be reduced such that flow into Hastings is less than 600 MW and Cape Breton Export[5] is below 590 MW summer / 680 MW winter. SPS #113 is armed to cover subsequent loss of 230kV transmission by shedding one Lingan if armed and activated. This is a reduction in Cape Breton Export capability of 250/340 MW (Winter/Summer) from the normal limit of 930 MW.

Test case *2013WP-NS-0.sav* has the highest Cape Breton Export (729 MW) without curtailable exports. To reduce Cape Breton Export to 680 MW, all four quick-start gas turbines at Burnside were brought from synchronous condenser mode to generate mode (+132 MW), Wreck Cove 1

[5] With L8004 out of service, Cape Breton Export is identified as Mainland at Hastings.

was taken off-line (-50 MW) and Tuft's Cove 3 was adjusted to 75 MW. In addition, Trenton gross generation must be reduced from 330 MW to 275 MW, with the difference taken up by curtailing BMPC non-firm load (-66 MW) and the rest balanced on Tufts Cove 3 (96 MW). Figure 72ab shows the pre-condition, and Figure 73ab shows the re-dispatched condition. Reactive power reserve in this dispatch pattern is acceptable but below optimal. It should be noted that loss of L8004 would have resulted in the tripping of a Lingan Unit by action of SPS #119.

The following contingencies were run with this N-1 configuration. Results meet NPCC criteria and are found in Appendix Y:

a07.1s	3 phase fault on l8003 at hopewell 345kv cleared in 4.5 cycles: sps drops lingan 2
a14	3 phase fault lakeside b62, cleared in 4 cycles, clearing l6008 and l6016
b03s	Slg fault on hastings end of 7012 3c-715 fails, clears 7012 and 7004 in 17 cycles sps
b04s	Slg fault on onslow end of 7005 67n-712 fails, clears 7005 and 7018 in 17 cycles; sps trips 1 lingan unit
b06s	Slg fault on onslow end of 8003 67n-812 fails, clears 8003 and 8002; sps trips 1 lingan unit
c01s	Slg flt on separate phases of double ckt tower 7003 and 7004 near trenton cleared in 5 cycles
c03s	Slg flt on separate phases of double ckt tower 8004 and 7005 canso crossing sps trips 1 lingan
a106	3 phase fault on b62 at lakeside Trips l6008, l6016, 103h-t6
c110a	1 phase fault on l6009 at 108h 108h-609 breaker fails bbu operates in 15 cycles b2 no reclosing no bs on

b99	3 phase fault on west section of l7004 at onslow cleared in 4.5 cycles

11.2. Loss of Brushy Hill SVC on Peak

Brushy Hill SVC provides the bulk of the dynamic reactive reserve requirements (DRR) to support the east-west corridor stability and the voltage stability of the Halifax load centre. The Onslow South Interface is limited by the DRR as shown in Figure 74.

Under winter peak conditions represented in the case *2013WP-NS-0.sav* the Onslow South flow of 845 MW requires reactive reserve of 255 Mvar, which as shown in Figure 75 is provided by:

- Brushy Hill SVC 120 Mvar dynamic
- Burnside 1-4: 60 Mvar
- Tufts Cove 1 27 Mvar
- Tufts Cove 2 29 Mvar
- Tufts Cove 3 59 Mvar
- Tufts Cove 4, 5, 6 29 Mvar
- **Total 324 Mvar**

If the SVC is lost under these conditions, the DRR would drop to 204 Mvar, and the limit from Figure 74 would be 740 MW, or a reduction of 105 MW. This re-dispatch would be accomplished by reducing the output of Wreck Cove by 50 MW, Trenton 5 by 20 MW and Trenton 6 by 40 MW. The redispatch would replace this generation with Burnside (66 MW) and Tuft's Cove 2 (42 MW). Figure 76 shows the post-redispatch conditions with DRR coming from:

- Brushy Hill SVC 0 Mvar dynamic
- Burnside 1-4: 68 Mvar
- Tufts Cove 1 30 Mvar
- Tufts Cove 2 30 Mvar
- Tufts Cove 3 68 Mvar
- Tufts Cove 4, 5, 6 35 Mvar
- **Total 222 Mvar**

Note that the decrease in flow increased the amount of DRR from the expected 204 Mvar due to lower line flows.

The following contingencies were run with this N-1 configuration. Results meet NPCC criteria and are found in Appendix Z:

a07.1s	3 phase fault on l8003 at hopewell 345kv cleared in 4.5 cycles: sps drops lingan 2
a14	3 phase fault lakeside b62, cleared in 4 cycles, clearing l6008 and l6016
b03s	Slg fault on hastings end of 7012 3c-715 fails, clears 7012 and 7004 in 17 cycles sps
b04s	Slg fault on onslow end of 7005 67n-712 fails, clears 7005 and 7018 in 17 cycles; sps trips 1 lingan unit
b06s	Slg fault on onslow end of 8003 67n-812 fails, clears 8003 and 8002; sps trips 1 lingan unit
c01s	Slg flt on separate phases of double ckt tower 7003 and 7004 near trenton cleared in 5 cycles
c03s	Slg flt on separate phases of double ckt tower 8004 and 7005 canso crossing sps trips 1 lingan
a106	3 phase fault on b62 at lakeside Trips l6008, l6016, 103h-t6
c110a	1 phase fault on l6009 at 108h 108h-609 breaker fails bbu operates in 15 cycles b2 no reclosing no bs on
a99.1	3 phase fault on west section of l7004 at onslow cleared in 4.5 cycles
a99.2	3 phase fault on west section of l7004 at ir084 cleared in 4.5 cycles

12. Wind Model Issues

This is the first Area Review to include detailed dynamics models for existing and proposed wind generation facilities. Numerous challenges were experienced with the models as provided by manufacturers, some of which have been resolved by model updates and some of which still outstanding. These issues do not significantly impact the results of this Review, but resolution is required as these units come on-line.

12.1. Acciona AW1500

The Acciona AW1500 is a 1.5 MW Double-Fed Induction Generator (Type III) with the stator winding connected directly to the grid and the rotor winding connected to the grid through a bidirectional power electronic voltage source converter. These machines are proposed for the 30 MW wind generating plant at Amherst NS and the 65 MW wind generating plant at nearby Aulac NB. The generators are rated 12kV and as such do not require step-up transformer to an intermediate collector voltage. The generators are capable of delivering power at a controllable power factor from 0.95 leading to 0.9 lagging. The units are capable of controlling voltage on the 12kV bus level and they respond to system disturbances by adjusting reactive power output; however this control is only available for three seconds, after which the reactive power output is returned to pre-contingency set point as shown in Figure 77. This provides some initial system voltage support for the first few seconds, but otherwise the units behave as constant var sources.

The Acciona plants are also supplied with a separate “SCADA-based wind plant voltage regulator. This system is used to dynamically control the reactive power output of the individual wind turbines within the wind plant to regulate a remote bus voltage, typically at the low side of the collector substation transformer although remote high side control may be feasible on a case by case basis”. This is a relatively slow-speed device which can control voltage over a period of 10’s of seconds to provide reactive power support to declining post-contingency voltage. This model has occasionally introduced high-frequency oscillations into the first few seconds of the simulation as shown in Figure 78. Because the effectiveness of the model is not evident in the 10-second time frame of the dynamic simulations, it was turned off in some studies to eliminate the numerical oscillation.

12.2. Enercon E82

The Enercon E82 is a 2.0 MW Fully-Inverted (Type IV) machine with the capability of voltage control and a reactive power range of between 0.90 leading to 0.90 lagging. Some versions of this machine can provide full reactive power range down to zero real power output, effectively operating as a FACTS device. These machines are proposed for the 22 MW wind generating plant at Statia and the 60 MW wind generating plant at Glen Dhu. The Statia plant will operate in constant power factor control mode to prevent voltage variations on the local distribution system which they share with other customers. The Glen Dhu plant will require the optional Farm Control Unit (FCU), which is a SCADA-based master voltage controller for the wind generating plant capable of controlling the voltage at the Point of Common Coupling by sending control signals to individual generators in the wind generating plant to provide coordinated reactive output control. The model used was revised in October 2008 to eliminate onerous requirements of 1ms time step and 15 second initialization. However, we still notice that the model does not

initialize from the load flow condition unless run for about 1 second. These issues did not adversely affect the study results.

12.3. Vestas V90

The Vestas V90 is a 3.0 MW Double-Fed Induction Generator (Type III) machine with the capability of voltage control and a reactive power range of between 0.90 leading to 0.90 lagging. The machine is proposed for the Nuttby Mountain 45 MW wind generating plant, which is connected to a radial 69kV circuit L5040 out of the 1N-Onslow substation. Several contingencies studied in this Review isolate the wind generating plant due to switching sequences:

d05	SLG fault on Onslow breaker 1N-600 clears Onslow 138kV and radial lines
a102	3 phase fault on Onslow 138kV bus 1N-B6 trips T72, L6001, T4, capacitor bank
c102	1 phase fault on Onslow B61 BBU on bus tie breaker

The Vestas V90 model does not behave properly for any case which isolates the plant with no other generators connected. The model also prevents disconnection of the model or the bus during simulation. As shown in Table 4 (note 4), the simulations for the above contingencies halt as soon as the V90 becomes isolated. To demonstrate the system performance for these contingencies, sensitivity simulations were conducted for the most stressed case (*2013SP-NS+200.sav)* with the assumption that the Nuttby Mountain plant is a classical generator model, so disconnection of the plant does not cause the simulation to halt. Results are presented in Appendix AA and are stable and well damped.

12.4. Performance during Underfrequency Events

Two of the base cases used in the stability analysis simulate transfers from NB to NS that result in underfrequency load shedding in NS following contingencies that trip the NS-NB intertie. These contingencies permit verification of the performance of the wind generation models in off-frequency conditions, which have been reported as problematic in other studies.

Figure 79 shows the underfrequency performance for summer peak, where islanding while importing 250 MW results in two stages of UFLS. Figure 80 show the underfrequency performance for winter peak, where islanding while importing 200 MW results in one stage of UFLS. Although the GE machines exhibit some minor numerical oscillation and the Dalhousie Mountain Enercon drop their output significantly while frequency is depressed, the models seem to behave adequately.

12.5. Dynamic Performance with High Wind Penetration

Wind generation has significantly different dynamic characteristics than “conventional” synchronous generators. A primary difference is the reduced or lack of rotational inertia,

particularly for the Type III machines (DFIG) and Type IV machines (fully-isolated inverter). Inertia is one component of the general stability equations – higher inertia generally means better stability. As higher degrees of wind-based generation is introduced into power systems, displacing conventional generation, there is the potential for reduced system stability/damping.

Figure 81abc shows the comparative performance of rotor angle and voltage for the same disturbance under the same load levels and transfer levels, but with and without 284 MW of wind generation (284/1192 = 23.8%). Figure 81a clearly shows that swing angles are more prominent with wind generation than with thermal generation. Figure 81b shows that voltage response on the Bulk Power 230kV system is better without the wind generation. However, Figure 81b also shows that system damping is better with the wind generation. This is because conventional generators “oscillate” when disturbed, whereas the wind generators tend to have a flat dynamic response, as shown in Figure 81c.

13. Short Circuit Analysis

The detailed System Impact Studies conducted for each of the new wind generation facilities in this IATR include an analysis of their impact on the short-circuit capacity of nearby equipment. Type III and Type IV wind generators do not add significant short circuit current in the sub-transient time frame, and no switchgear was found to be impacted by the addition of this new generation.

The following table summarizes the results of the short circuit analysis conducted as part of the respective System Impact Study:

Interconnection Request	Project	Short Circuit Level	% Increase
IR045	Amherst 30 MW	Maccan 138kV 4,300 A	5.5
IR082	Nuttby 45 MW	Onslow 69kV 5.907 A	6.8
IR084	Dalhousie 51MW	Onslow 230kV 10,892A	0.1
IR114	Glen Dhu 60 MW	Lochaber 138kV 5,180 A	4.9
IR141	Digby 30 MW	Gulch 69kV 3,500 A	20
IR137/IR150	Statia 22 MW	Tupper 138kV 9,300 A	1.7
IR151	Tufts Cove 6 50 MW	Tufts Cove 138kV 3,069 A	4.7

14. Impact Assessment and Overall Summary

Nova Scotia forecast and plans for the study year 2013 have been discussed in this Intermediate Area Transmission Review, with focus on:

1. The addition of six wind generation facilities totaling 238 MW, plus existing wind generation (60 MW) not previous modeled in an Area Review.
2. The addition of Tuft's Cove Unit 6, a 50 MW steam turbine generator, changing the operation of units 4 and 5 into a combined-cycle unit (Tuft's Cove 4, 5, 6)
3. The reclassification of nine buses and associated elements in NS as Bulk Power as a result of the implementation of the new A-10 Criteria.
4. The replacement of the generator and excitation system for Trenton unit #5 (150 MW nominal).

The main conclusion of this Intermediate Review is that the Bulk Power Transmission system of Nova Scotia planned for the study year 2013 is judged to be in conformance with the ″NPCC Basic Criteria for Design and Operation of the Interconnected Power Systems". The following observations are noted:

1. Several 138kV lines near the Tuft's Cove generating station, as newly classified BPS elements, require dual high-speed protection systems.
2. The Tuft's Cove 69kV bus requires Breaker Failure Protection
3. The Type I SPS #119 arming level should be reduced by 100 MW to prevent thermal overload of L6511 and L7004 with the addition of new wind generating plants at Dalhousie Mountain and Glen Dhu.
4. Switches on L5003 at Akerley Boulevard and Farrell St. 69kV substations should be uprated to match the rating of the line, in conjunction with summer operating restrictions on the total net output of the Tuft's Cove thermal generating station.
5. The double-circuit towers which carry L7008 and L7009 for 5.5 km out of Brushy Hill 230kV substation should be re-configured to accommodate the normal contingency loss of both circuits, which isolates the western non-bulk system in an uncontrolled fashion.
6. Wind generation model issues should be addressed by the manufacturers.
7. A Type III SPS for the Digby-Rossway 30 MW wind generation plant on the western non-bulk power 69kV system will be brought to NPCC for review in 2009.
8. The NS system can be operated reliably with the addition of the new generation facilities provided that transmission interfaces are honoured. This may result in a change in the economic dispatch principles presently used.
9. The Onslow-South interface limit can be increased with the addition of 100 Mvar of reactive power support at Onslow 230kV bus, but the benefit of the increase will be limited by the summer thermal rating of L6001. Overload of L6001 could be managed by starting the 10-minute reserve units at Burnside post-contingency.

10. Nuttby Mountain 45 MW wind generation plant will be curtailed when its output exceeds the thermal rating of the 69kV radial line L5040.
11. If load approaches the level studied in the Extreme System Condition analysis (90/10 forecast with no effective DSM program), there will be local voltage and loading issues. Reactive power sharing arrangements on the 345kV intertie with NB would be violated, and the breaker failure at Onslow 345kV would fail criteria without the addition of about 200 Mvar of reactive power support in that area. It is recognized that Extreme System Condition assessment is not meant to dictate planning requirements (criteria need not be met), but is an indication of robustness of the system.
12. Operation without generation at Trenton exposes the Eastern Shore 69kV system and buses near Trenton to low voltage in the event of loss of both 138kV circuits from Hopewell to Trenton (double-circuit tower fault, breaker failure, bus fault). Operating instructions for the Onslow 230kV-138kV autotransformer should be enforced, but the addition of a capacitor bank at Trenton will eliminate the issue.
13. The system can be reasonably re-dispatched following the loss of the most critical elements on the NS system. This may not be the case following loss of the single 345kV tie between NS and NB which could put NS in and islanded mode of operation. However, while islanded from the interconnected system, contingencies in NS would have no adverse effect outside the local area.
14. The replacement of the generator and excitation system of Trenton Unit 5 will improve the performance of the power system.
15. Wind generation plants perform well during UFLS events, but can trip off-line during instability events.
16. Wind generators have less inertia, therefore tend to decrease system angular stability, but tend to improve system damping at high penetration levels.
17. The monitoring points for the Onslow Import interface, used for arming SPS's, must be updated to reflect power received at 67N-Onslow and 1N-Onslow.
18. Dead-line testing for three-pole reclosing should be moved away from the Tuft's Cove generating station, except for the case of L6040 and L6042.
19. Increase in short circuit level due to new generation does not require switchgear upgrade.

Tables

TABLE 1
Comparison between the Study Conditions of the 2006 Comprehensive Area Transmission Review and this Intermediate Area Transmission Review

	2006 Comprehensive Area Transmission Review	2008 Intermediate Area Transmission Review
Study Year	2011	2013
Basis for Load Forecast	2006 Nova Scotia Power Load Forecast	2008 Nova Scotia Power Load Forecast
In-Province Load Firm Load Operable Generation Capacity (Existing & Planned Changes) Capacity Sales Agreements Margin Based on net Capacity & Firm Load	2504 MW 2102 MW 2493 MW (includes 199 MW renewable generation accredited with 64 MW capacity) 0 MW 18.6%	2257 MW 1911 MW 2457 MW (includes 320 MW renewable generation with accredited capacity 102.4 MW) 0 MW 28.6%
In-Province Transmission Facilities	Hammonds Plains 2007 Beaver Narrows Crossing 2008 Amherst Transformer 2008 Waterville Transformer 2008 St Croix 138kV bus 2009 Burnside East 138kV 2009 Tremont 138kV second line and Transformer 2009 Prospect Road 69kV 2010 Bridgewater 36Mvar cap 2010 Barrington Passage Xfmr 2011 Lakeside 69kV capacitor 2011	Hammond Plains (in-service) Beaver Narrows (in-service) Amherst Xfmr (in-service) Waterville Transformer 2009 St Croix 138kV bus 2009 Burnside East 138kV 2009 Tremont 138kV second line and Transformer 2010 Prospect Road 138kV 2010 Bridgewater 36Mvar cap 2010 Barrington Passage Xfmr 2012 Gannan Rd Xfmr 2011

Table 2
NPCC Classified SPS List

NPCC #	*Type*	*Function*	*Common Name*	*Initiating Condition*	*Resulting Action*	*Reason for Initiation*
133	I	GR	Lingan BBU SPS	Breaker backup operation of the common breaker (88S-723) between L7012 and L7014 at Lingan	Trip one of four units at Lingan (pre-selected by the operator)	To prevent instability of eastern NS system for any fault on L7012 or L7014 coincident with specific breaker failure
119	I	GR	NS 345 kV SPS	The SPS will operate following a specific system event or a sequence of events at the Hopewell or Onslow substations and/or lines L-8003 and L-8004	Depending on the level of NS internal East - West transfers, either one or two 150 MW units will be rejected at Lingan. These units will be pre-selected by the operator at flow levels determined by operating studies.	Maintain stability.
15	III	TCT	NB - NS (Import Power Monitor)	Total exports from NB to NS exceeds 100 MW* and 345 kV Line 3025/8001 opens.	Cross-trip 138kV line L6513 to force an island of Nova Scotia	To prevent uncontrolled separation of NS, thereby limiting exposure to UFLS
139	III	LR	Strait Area Overload Protection System	Loss of 138 kV line with high local load and high ambient temperature	Automatic reduction of load at 47C	Prevent thermal overload of lines supplying 47C load
113	III	GR	230 PHLO	Any multiphase fault on the Onslow Lingan 230 kV circuits or the loss of one or more circuits when power flows are above certain levels.	Trip selected units at Lingan. (150 -300 MW)	System stability and prevent thermal overload when L8004 is out of service.
130	III	GR	NS Export to NB (Export power	Loss of L-8001(or NB Lines L-3006 or L-3025) with exports from NS to NB	Rejection of up to 300 MW of NS generation.	To prevent thermal overloading of line L6513, and separation of Nova

NPCC #	Type	Function	Common Name	Initiating Condition	Resulting Action	Reason for Initiation
			monitor)	in excess of a thermal limit on L-6513.		Scotia from New Brunswick.
168	III	LR	Strait area Transformer Overload Protection	High load in Strait of Canso Area with high ambient temperature, no generation at Pt. Tupper, followed by loss of one 230-138 kV transformer, or loss of generation at Tupper with one transformer out	Send signal to rapidly curtail non-firm load at 47C plant on detection of transformer overload	Prevent post contingency thermal overload of Port Hastings 230-138 kV transformer
169	III	GR	Lingan Overfrequency SPS	Auto arm if load at 47C exceeds 15% of total load, loss of load as an island	Trip one unit at Lingan (150 MW) if frequency exceeds 60.8 Hz for 100 ms.	Limit overfrequency when NS or Maritimes is operating as an island and a large block of load is lost.
170	III	GR	Lingan N-1 SPS	Transmission element out of service, loss of one or more additional elements.	Trip one or two units (150 MW each) at Lingan.	Provide increased east-west transfer capability when transmission elements are out of service or forced outages greater than 30 min.
193	III	GR	Wreck Cove L6538 Overload	Line L6538 load over 114 MVA for more than 6 minutes	Trip one Wreck Cove unit (up to 100 MW)	To prevent thermal overload of steel conductor water crossing for loss of L6537 when total Wreck Cove output is above 120 MW
194	III	LR/TCT	Kinston Greenwood UVLS	Loss of transmission elements with resulting low voltage	Trip radial 69kV circuit L5024 isolating load at Kingston and Greenwood	To avoid local voltage depression for a single contingency at high load

Table 3
Steady-State Testing Contingencies

Contingency	*Event*	*SPS Action*
C01	Trip L8004	Without SPS
C01s	Trip L8004	With 1 unit SPS
C01ss	Trip L8004	With 2 unit SPS
C02	Trip L8003	Without SPS
C02s	Trip L8003	With 1-unit SPS
C02ss	Trip L8003	With 2-unit SPS
C03	Trip L8002	
C04	Trip L8001	Without SPS
C04s	Trip L8001	With 1-unit SPS
C04ss	Trip L8001	With 2-unit SPS
C05	Trip L7012	Without SPS
C05s	Trip L7012	With sps
C06	Trip L7011	
C07	Trip L7005	
C08	Trip L7018	
C09	Trip L7009	
C10	Trip L7004 (West Dalhousie Wind generating plant to Onslow 230kV)	
C11	Trip L7014	
C12	Trip L6503	
C13	Trip L6511	
C14	Trip L6511E (Glen Dhu Wind generating plant to Lochaber Road 138kV)	
C15	Trip L6511W (Glen Dhu Wind generating plant to Trenton 138kV)	
C16	Trip L6513	
C17	Trip L6536 (Springhill to Aulac Wind generating plant in NB)	
C18	Trip L6535S (Amherst Wind generating plant to Maccan)	
C19	Trip L6535N (Amherst Wind generating plant to Memramcook)	
C20	Trip L6537	
C21	Trip L6516	
C22	Trip L6538	
C23	Trip L6003	
C24	Trip L6005	

Contingency	*Event*	*SPS Action*
C25	Trip L6007	
C26	Trip L6008	
C27	Trip L6009	
C28	Trip L6010	
C29	Trip L6014	
C30	Trip L6016	
C31	Trip L6033	
C32	Trip L6035	
C33	Trip 103H-B61	
C34	Trip 103H-B62	
C35	Double Circuit Tower L6005+L6010	
C36	Double Circuit Tower L6010 + L6011	
C37	Double Circuit Tower L6005 L6016	
C38	Double Circuit Tower L6003 L6009	
C39	Double Circuit Tower L6003 L6007	
C40	Double Circuit Tower L7008 L7009 ISOLATES WEST	
C41	1 Phase Fault on L6016 Breaker Failure 622	
C42	1 Phase Fault L6033, Breaker Failure 103H-632	
C43	Breaker Failure L6005 L6010 90h-608	
C44	Breaker Failure L6008 L6009 90H-611	
C45	Breaker Failure on 91H-523	
C46	1 Phase Fault L6009 Breaker Failure on 108H 607	
C47	1 Phase Fault 103H-600	
C48	1 Phase Fault on Breaker 91H-523	
C49	1 Phase Fault on 104H-600	
C50	1 Phase Fault fault on L6507, Breaker Failure 79N-606	
C50s	1 Phase Fault fault on L6507, Breaker Failure 79N-606	
C50ss	1 Phase Fault fault on L6507, Breaker Failure 79N-606	
C51	1 Phase Fault fault on 1N Bus 61	
C52	Breaker Failure 47C-601	
C53	Breaker 47C-602 fault	
C54	Breaker Failure 88S-723	Without SPS
C54s	Breaker Failure 88S-723	With SPS
C55	Breaker Failure 67N-712	
C56	Breaker Failure 67N-811 L8003 + T82	Without SPS
C56s	Breaker Failure 67N-811 L8003 + T82	1 unit SPS

Contingency	*Event*	*SPS Action*
C56ss	Breaker Failure 67N-811 L8003 + T82	2 unit SPS
C57	Breaker Failure 67N-812 L8003+L8002	Without SPS
C57s	Breaker Failure 67N-812	1-unit SPS
C57ss	Breaker Failure 67N-812	2-unit SPS
C58	Breaker Failure 79N-810	Without SPS
C58s	Breaker Failure 79N-810	1-unit SPS
C58ss	Breaker Failure 79N-810	2-unit SPS
C59	Breaker Failure 88S-721 Trip Lingan 3 and 4	
C60	Double Circuit Tower on L7003+L7004	
C61	Double Circuit Tower on Strait Crossing Trip L8004-L7005	Without SPS
C61s	Double Circuit Tower on Strait Crossing L8004-L7005	1-unit SPS
C61ss	Double Circuit Tower on Strait Crossing L8004-L7005	2-unit SPS
C62	1 Phase Fault on breaker 88S-721 Trips Lingan 3 and 4	
C63	1 Phase Fault on Salisbury SA3-2 Trips L3006 and L3017	
C64	1 Phase Fault on breaker Salisbury Breaker SA3-4 Trips L3013 and T2	

Table 4 Dynamics Results

Number	Filename Fault / Disturbance Description	Winter			Summer			Light		Extreme
		2013WP-NS-0	2013WP-DSM-NS-200	2013WP-NS-import-200	2013SP-NS-0	2013SP-NS-250	2013SP-NS+200	2013LL-NS-0	2013LL-NS-notr	2013XP
	Detailed Results in Appendix									
a07.1s	a07.1s-3p_8003_79n-BASECASE.out 3 PHASE FAULT ON L8003 AT Hopewell 345kV CLEARED IN 4.5 CYCLES: sps drops lingan 2	O	O			2	O			O
a07.2	a07.2-3p_8003_67n-BASECASE.out 3 PHASE FAULT ON L8003 AT ONSLOW CLEARED IN 4.5 CYCLES: No SPS	1	1	O	O	O	1	O	O	1
a07.2s	a07.2s-3p_8003_67n-BASECASE.out 3 PHASE FAULT ON L8003 AT ONSLOW CLEARED IN 4.5 CYCLES: sps drops lingan 2	O	O	2	2	2	1	2	2	O
a07.2ss	a07.2ss-3p_8003_67n-BASECASE.out 3 PHASE FAULT ON L8003 AT ONSLOW CLEARED IN 4.5 CYCLES: sps drops lingan 2 + 4	2		2	2	2	O	2	2	O
a08	a08-3p_8002_67n-BASECASE.out 3 PHASE FAULT ON L8002 AT ONSLOW CLEARED IN 4.5 CYCLES: NO SPS	O	O	O	O	O	O	O	O	O
a09	a09-3p_8001_67n-BASECASE.out 3 PHASE FAULT ON L8001 AT ONSLOW CLEARED IN 4.5 CYCLES: NO SPS	O	O	O	O	O	O	O	O	O
a09.1	a09.1-3p_8001_67n-BASECASE.out 3 PHASE FAULT ON L8001 AT ONSLOW CLEARED IN 4.5 CYCLES: SPS trips L6513 isolates NS on import	2	2	5	2	6	2	2	2	2
a09s	a09s-3p_8001_67n-BASECASE.out 3 PHASE FAULT ON L8001 AT ONSLOW CLEARED IN 4.5 CYCLES: NO SPS	2	O	2	2	2	2	2	2	2
a10	a10-3p_6503_50n-BASECASE.out 3 PHASE FAULT ON L6503 AT TRENTON CLEARED IN 5 CYCLES: NO SPS	O	O	O	O	O	O	O	O	O
a12	a12-3p_79n-BASECASE.out 3 PHASE FAULT ON T81 AT WOODBINE CLEARED IN 4.5 CYCLES: no SPS	1	1	O	O	O	1	O	O	1
a12s	a12s-3p_79n-BASECASE.out 3 PHASE FAULT ON T81 AT WOODBINE CLEARED IN 4.5 CYCLES: SPS DROPS LINGAN UNIT 2	O	O	2	2	2	O	2	2	O
a12ss	a12ss-3p_79n-BASECASE.out 3 PHASE FAULT ON T81 AT WOODBINE CLEARED IN 4.5 CYCLES: SPS DROPS LINGAN UNIT 2 and 3	2	2	2	2	O		2	2	O
a14	a14-3ph_103h_b62-BASECASE.out 3 phase fault Lakeside B62, cleared in 4 cycles, clearing L6008 and L6016	O	O	O	O	O	O	O	O	O
a99.1	a99.1-7004w_3ph_67N-BASECASE.out 3 phase fault on west section of L7004 at Onslow cleared in 4.5 cycles	O	O	O	O	O	O	O	O	O
a99.2	a99.2-7004w_3ph_67N-BASECASE.out 3 phase fault on west section of L7004 at IR084 cleared in 4.5 cycles	O	O	O	O	O	O	O	O	O
b01	b01-7012_1ph_88s723-BASECASE.out SLG FAULT ON LINGAN END OF 7012 88S723 FAILS, CLEARS 7012 AND 7014 IN 15 CYCLES: NO SPS	1	1	1	O	O	1	O	O	1
b01s	b01s-7012_1ph_88s723-BASECASE.out SLG FAULT ON LINGAN END OF 7012 88S723 FAILS, CLEARS 7012 AND 7014 IN 15 CYCLES: SPS trips Unit 4	O	O	O	O	O	O	2	O	O
b03	b03-7012_1ph_3c715-BASECASE.out SLG FAULT ON HASTINGS END OF 7012 3C-715 FAILS, CLEARS 7012 AND 7004 IN 17 CYCLES	O	O	O	O	O	O	O	O	O

Legend:
O - Results OK
1- SPS Required
2 - SPS Not Armed
3 - Line does not currently have dual high-speed protection but will be required
4 - Simulation halted due to Vestas V90 model see 12.3
5 - Stage 1 UFLS
6 - Stage I and 2 UFLS

Table 4 Dynamics Results

Number	Filename Fault / Disturbance Description	Winter			Summer			Light		Extreme
		2013WP-NS-0	2013WP-DSM-NS-200	2013WP-NS-import-200	2013SP-NS-0	2013SP-NS-250	2013SP-NS+200	2013LL-NS-0	2013LL-NS-notr	2013XP
b03s	b03s-7012_1ph_3c715-BASECASE.out SLG FAULT ON HASTINGS END OF 7012 3C-715 FAILS, CLEARS 7012 AND 7004 IN 17 CYCLES SPS	O	O	O	O	O	O	O	O	O
b04	b04-7005_1ph_67n712-BASECASE.out SLG FAULT ON ONSLOW END OF 7005 67N-712 FAILS, CLEARS 7005 AND 7018 IN 17 CYCLES	O	O	O	O	O	1	O	O	1
b04s	b04s-7005_1ph_67n712-BASECASE.out SLG FAULT ON ONSLOW END OF 7005 67N-712 FAILS, CLEARS 7005 AND 7018 IN 17 CYCLES; SPS trips 1 lingan unit	2	2	2	2	2	1	2	2	O
b04ss	b04ss-7005_1ph_67n712-2013SP-NS+200a.out SLG FAULT ON ONSLOW END OF 7005 67N-712 FAILS, CLEARS 7005 AND 7018 IN 17 CYCLES; SPS trips 2 lingan units	2	2	2	2	2	O	2	2	O
b06	b06-8003_1ph_67n812-BASECASE.out SLG FAULT ON ONSLOW END OF 8003 67N-812 FAILS, CLEARS 8003 AND 8002 no SPS	1	1	O	O	O	1	O	O	1
b06s	b06s-8003_1ph_67n812-BASECASE.out SLG FAULT ON ONSLOW END OF 8003 67N-812 FAILS, CLEARS 8003 AND 8002; sps trips 1 lingan unit	O	O	2	2	2	1	2	2	O
b06ss	b06ss-8003_1ph_67n812-BASECASE.out SLG FAULT ON ONSLOW END OF 8003 67N-812 FAILS, CLEARS 8003 AND 8002; sps trips 2 lingan units	2		2	2	2	O	2	2	O
b07	b07-pg_8004_79n_bbu-BASECASE.out 1 PHASE FAULT ON L8004 AT HOPEWELL, BREAKER 79N-810 FAILS BBU TRIPS 8003 IN 15 CYCLES: no sps	1	1	O	O	O	1	O	O	1
b07s	b07s-pg_8004_79n_bbu-BASECASE.out 1 PHASE FAULT ON L8004 AT HOPEWELL BREAKER 79N-810 FAILS BBU TRIPS 8003 IN 15 CYCLES: SPS DROPS LINGAN UNIT 2	O	O	2	2	2	1	2	2	O
b07ss	b07ss-pg_8004_79n_bbu-BASECASE.out 1 PHASE FAULT ON L8004 AT HOPEWELL BREAKER 79N-810 FAILS BBU TRIPS 8003 IN 15 CYCLES: SPS DROPS LINGAN UNIT 2 and 3	2	O	2	2	2	O	2	2	O
b08	b08-88s_b71_1ph_88s721-BASECASE.out SLG FAULT ON LINGAN bus node between G3 and G4 88S721 FAILS, CLEARS G3 and G4 IN 15 CYCLES	O	O	O	O	O	O	O	O	O
b09	b09-pg_8001_67n_815_bbu-BASECASE.out 1 PHASE FAULT ON L8001 AT onslow BREAKER 67N-815 FAILS; BBU TRIPS 67N-T82 IN 15 CYCLES; no sps	O	O	O	O	O	1	O	O	O
b09s	b09s-pg_8001_67n_815_bbu-BASECASE.out 1 PHASE FAULT ON L8001 AT onslow BREAKER 67N-815 FAILS; BBU TRIPS 67N-T82 IN 15 CYCLES; SPS trips 1 Unit	2	O	2	2	2	O	2	2	2
c01	c01-pg_7003_7004_50n-BASECASE.out slg flt on separate phases of double ckt tower 7003 and 7004 near Trenton cleared in 5 cycles	O	O	O	O	O	1	O	O	1
c01s	c01s-pg_7003_7004_50n-BASECASE.out slg flt on separate phases of double ckt tower 7003 and 7004 near Trenton cleared in 5 cycles	2	2	2	2	2	O	2	2	O
c03	c03-pg_8004_7005_strait-BASECASE.out slg flt on separate phases of double ckt tower 8004 and 7005 Canso crossing cleared in 4 cycles	1	1	O	O	O	1	O	O	1
c03s	c03s-pg_8004_7005_strait-BASECASE.out slg flt on separate phases of double ckt tower 8004 and 7005 Canso crossing sps trips 1 lingan	O	1	2	2	2	1	2	2	O
c03ss	c03ss-pg_8004_7005_strait-BASECASE.out slg flt on separate phases of double ckt tower 8004 and 7005 Canso crossing sps trips 2 lingans	2		2	O	2	O	2	2	O
d03	d03-1ph_50n604-BASECASE.out 1 phase fault on trenton Bus-tie Breaker 50n604 5 cycles, no reclosing, clears whole 138 kV station	O	O	O	O	O	O	O	O	O

Legend:
O - Results OK
1- SPS Required
2 - SPS Not Armed
3 - Line does not currently have dual high-speed protection but will be required
4 - Simulation halted due to Vestas V90 model see 12.3
5 - Stage 1 UFLS
6 - Stage I and 2 UFLS

Table 4 Dynamics Results

Number	Filename Fault / Disturbance Description	Winter			Summer			Light		Extreme
		2013WP-NS-0	2013WP-DSM-NS-200	2013WP-NS-import-200	2013SP-NS-0	2013SP-NS-250	2013SP-NS+200	2013LL-NS-0	2013LL-NS-notr	2013XP
d04	d04-88s721_1ph-BASECASE.out SLG FAULT ON LINGAN breaker 88S721trips lingan 3 and 4 in 4 cycles	O	O	O	O	O	O	O	O	O
d05	d05-1n600_1ph-BASECASE.out SLG FAULT ON Onslow breaker 1n600 clears Onslow 138kv and radial lines	4	4	4	4	4	4	4	4	4
e02	e02-lose-tc3-BASECASE.out Lose Tufts Cove 3 No Fault	O	O	O	O	O	O	O	O	O
e03	e03-lose-stora-BASECASE.out Lose all load at Stra No Fault	O	O	O	O	O	O	O	O	O
a101	a101-b1_3ph_79n_nrecl-BASECASE.out 3ph FAULT ON 138kV bus B1 at 79N Hopewell No SPS	1	1	O	O	O	1	O	O	1
a101s	a101s-b1_3ph_79n_nrecl-BASECASE.out 3ph FAULT ON 138kV bus B1 at 79N Hopewell SPS trips lingan unit	O	1	O	2	2	1	2	2	O
a101ss	a101ss-b1_3ph_79n_nrecl-BASECASE.out 3ph FAULT ON 138kV bus B1 at 79N Hopewell SPS trips 2 lingan units	2	O	2	2	2	O	2	2	O
a102	a102-b61_3ph_1n_nrecl-BASECASE.out 3 phase fault on Onslow 138kV bus B6trips T72, L6001, T4, capacitor bank	4	4	4	4	4	4	4	4	4
a103	a103-L6503_3ph_1n_recl-BASECASE.out 3 phase fault on L6503 at Trenton Cleared in 6 cycles - reclose attempt from Onslow	O	O	O	O	O	O	O	O	O
a104	a104-120h-b61_3ph_nrecl-BASECASE.out 3 phase fault on B61 at Brushy Hill 138kV trips 120H-T72	O	O	O	O	O	O	O	O	O
a105	a105-L6012_3ph_recl-BASECASE.out 3 phase fault on L6012 at 120H Brushy Recloses in 5 seconds	O	O	O	O	O	O	O	O	O
a106	a106-103h-b62_3ph_nrecl-BASECASE.out 3 phase fault on B62 at Lakeside trips l6008, l6016, 103h-t6	O	O	O	O	O	O	O	O	O
a107	a107-l6003_3ph_recl-BASECASE.out 3 phase fault on l6003 at sackville recloses from Sackville in 5 seconds	O	O	O	O	O	O	O	O	O
a108	a108-l6003_91H_3ph_recl-BASECASE.out 3 phase fault on l6003 at Tufts cove clears fault in 6 cycles Recloses from tufts cove in 3s	O	O	O	O	O	O	O	O	O
a109	a109-l6004_90H_3ph_recl-BASECASE.out 3 phase fault l6004 at sackville clears fault in 6 cycles, recloses in 4 seconds from TC	O	O	O	O	O	O	O	O	O
a110	a110-l6523_3ph_recl-BASECASE.out 3 phase fault l6523 at stora clears fault in 6 cycles, recloses in 5 seconds from POT	O	O	O	O	O	O	O	O	O
a112	a112-l5049_3ph_nrecl-BASECASE.out 3 phase fault l5049 at 91H-Tufts Cove69kV clears fault in 9 cycles, no reclose	O	O	O	O	O	O	O	O	O
a113	a113-l6009_3ph_recl-BASECASE.out 3 phase fault l6009 at 101H Cobequid Rd clears fault in 6 cycles, reclose from Sackville in 5s	O	O	O	O	O	O	O	O	O
a114	a114-b61_3ph_2C_nrecl-BASECASE.out 3 phase fault on Hastings 138kV Bus B61 Cleared in 6 cycles	O	O	O	O	O	O	O	O	O

Legend:
O - Results OK
1- SPS Required
2 - SPS Not Armed
3 - Line does not currently have dual high-speed protection but will be required
4 - Simulation halted due to Vestas V90 model see 12.3
5 - Stage 1 UFLS
6 - Stage I and 2 UFLS

Table 4 Dynamics Results

Number	Filename Fault / Disturbance Description	Winter			Summer			Light		Extreme
		2013WP-NS-0	2013WP-DSM-NS-200	2013WP-NS-import-200	2013SP-NS-0	2013SP-NS-250	2013SP-NS+200	2013LL-NS-0	2013LL-NS-notr	2013XP
a115	a115-b62_3ph_2C_nrecl-BASECASE.out 3 phase fault on Hastings 138kV Bus B62 Cleared in 6 cycles	O	O	O	O	O	O	O	O	O
a116	a116-l6014_91H_3ph_recl-BASECASE.out 3 phase fault on L6014 at Tuft's Cove Cleared in 6 cycles reclosing attempt from 91H in 10 sec	O	O	O	O	O	O	O	O	O
a116F	a116F-l6014_91H_3ph_recl-BASECASE.out 3 phase fault on L6014 at Tuft's Cove Primary Protection Fails Cleared in 6 cycles reclosing attempt from 91H in 10 sec	O	O	O	O	O	O	O	O	O
a117	a117-l6014_104H_3ph_recl-BASECASE.out 3 phase fault on L6014 at Kempt Rd Cleared in 6 cycles reclosing attempt from 91H in 10 sec	O	O	O	O	O	O	O	O	O
a117F	a117F-l6014_104H_3ph_recl-BASECASE.out 3 phase fault on L6014 at Kempt Rd Primary Failed Cleared in 6 cycles reclosing attempt from 91H in 10 sec	3	3	3	3	O	3	O	O	3
a117.1F	a117.1F-l6014_104H_3ph_recl-BASECASE.out 3 phase fault on L6014 at Kempt Rd Primary Failed Tufts Cove units trip	3	3	3	O	O	3	O	O	3
a118	a118-l6035_1H_3ph_nrecl-BASECASE.out 3 phase fault on L6035 at Water St Cleared in 6 cycles	O	O	O	O	O	O	O	O	O
a118F	a118F-l6035_1H_3ph_nrecl-BASECASE.out 3 phase fault on L6035 at Water St Primary Failed Cleared in 6 cycles from 1H, 25 Cycles from KemptRd	O	O	O	O	O	O	O	O	O
a119	a119-l6007_108H_3ph_recl-BASECASE.out 3 phase fault on L6007 at Burnside Cleared in 6 cycles from Burnside	O	O	O	O	O	O	O	O	O
a119F	a119F-l6007_108H_3ph_recl-BASECASE.out 3 phase fault on L6007 at Burnside Primary Protection Fails Cleared in 6 cycles from Burnside	3	3	3	O	O	3	O	O	3
a120	a120-l6008_103H_3ph_recl-BASECASE.out 3 phase fault on L6008 at 108H-LAK Cleared in 6 cycles - reclose attempt in 5 sec from 91H	O	O	O	O	O	O	O	O	O
a120F	a120F-l6008_103H_3ph_recl-BASECASE.out 3 phase fault on L6008 at 108H-LAK Primary Fails Cleared in 6 cycles - reclose attempt in 5 sec from 91H	O	O	O	O	O	O	O	O	O
a121	a121-l6010_120H_3ph_recl-BASECASE.out 3 phase fault on L6010 at 120H-BrushyHill Cleared in 6 cycles - reclose attempt in 3 sec from 120H	O	O	O	O	O	O	O	O	O
a121F	a121F-l6010_120H_3ph_recl-BASECASE.out 3 phase fault on L6010 at 120H-BrushyHill Primary Fails Cleared in 6 cycles - reclose attempt in 3 sec from 120H	O	O	O	3	O	3	O	O	O
a122	a122-l6042_113H_3ph_recl-BASECASE.out 3 phase fault on L6042 at 113H-DartEast Cleared in 6 cycles - reclose attempt in 5 sec from 91H	O	O	O	O	O	O	O	O	O
a122F	a122F-l6042_113H_3ph_recl-BASECASE.out 3 phase fault on L6042 at 113H-DartEast Primary Fails Cleared in 6 cycles - reclose attempt in 5 sec from 91H	O	O	O	O	O	O	O	O	O
b101	b101-L6005+L6010_DCT_nrecl-BASECASE.out 1 phase fault on DCT L6005+L6010 at 120H Brushy clears fault in 6 cycles, no reclose	O	O	O	O	O	O	O	O	O
b102	b102-L6011+L6010_DCT_nrecl-BASECASE.out 1 phase fault on DCT L6011 + L6010 at Brushy 138 clears fault in 6 cycles, no reclose	O	O	O	O	O	O	O	O	O
b103	b103-L6005+L6016_DCT_nrecl-BASECASE.out 1 phase fault L6005/L6016 at 120H, cleared in 6 cycles, no reclosing	O	O	O	O	O	O	O	O	O

Legend:
O - Results OK
1- SPS Required
2 - SPS Not Armed
3 - Line does not currently have dual high-speed protection but will be required
4 - Simulation halted due to Vestas V90 model see 12.3
5 - Stage 1 UFLS
6 - Stage I and 2 UFLS

Table 4 Dynamics Results

Number	Filename Fault / Disturbance Description	Winter			Summer			Light		Extreme
		2013WP-NS-0	2013WP-DSM-NS-200	2013WP-NS-import-200	2013SP-NS-0	2013SP-NS-250	2013SP-NS+200	2013LL-NS-0	2013LL-NS-notr	2013XP
b104	b104-L6003+L6009_DCT_nrecl-BASECASE.out 1 phase fault L6003/L6009 at 90H, cleared in 6 cycles, no reclosing	O	O	O	O	O	O	O	O	O
b105a	b105a-L6003+L6007_DCT_nrecl-BASECASE.out 1 phase fault L6003/L6007 at 91H, cleared in 6 cy fault impedance with all generation on	O	O	O	O	O	O	O	O	O
b105b	b105b-L6003+L6007_DCT_nrecl-BASECASE.out 1 phase fault L6003/L6007 at 91H, cleared in 6 cy fault impedance with Burnside generation off	O	O	O	O	O	O	O	O	O
b105c	b105c-L6003+L6007_DCT_nrecl-BASECASE.out 1 phase fault L6003/L6007 at 91H, cleared in 6 cy fault impedance with burnside and TC 1+2 off	O	O	O	O	O	O	O	O	O
b106	b106-L7008+L7009_DCT_nrecl-BASECASE.out 1 phase fault DCT L7008/L7009 at 120H, cleared in 4 cycles, no reclosing - west separates at 0.2 sec	O	O	O	O	O	O	O	O	O
c101	c101-79N-606_BBU_nrecl-BASECASE.out 1 phase fault Hopewell L6507, cleared in 6 cy BBU on Breaker 600 clears the station - no SPS	1	1	O	O	O	1	O	O	1
c101s	c101s-79N-606_BBU_nrecl-BASECASE.out 1 phase fault Hopewell L6507, cleared in 6 cy BBU on Breaker 600 clears the station - 1 unit SPS	O	O	2	2	2	O	2	2	O
c102	c102-1N-600_BBU_nrecl-BASECASE.out 1 phase fault on Onslow B61 BBU on bus tie breaker	4	4	4	4	4	4	4	4	4
c103	c103-120H-622_BBU_nrecl-BASECASE.out 1 phase fault L6016 at 120H, BBU on 120H-622 trips L6016 L6005 in 14 cycles	O	O	O	O	O	O	O	O	O
c104	c104-103H-632_BBU_nrecl-BASECASE.out 1 phase fault L6033 at 103H, cleared 1H in 6 cy 103h-632 fails, Bus B61 clears	O	O	O	O	O	O	O	O	O
c105	c105-90H-608_BBU_nrecl-BASECASE.out 1 phase fault L6010 at 90H, 120H end cleared in 6 cy BBU on 90H-608 trips L6005 in 14 cycles	O	O	O	O	O	O	O	O	O
c106	c106-90H-611_BBU_nrecl-BASECASE.out 1 phase fault L6008 at 90H, 103H end cleared in 6 cy BBU on 90H-611 trips L6009 in 14 cycles	O	O	O	O	O	O	O	O	O
c107	c107-47C-601_BBU_nrecl-BASECASE.out 1 phase fault L6518 at 47C, 2C end cleared in 6 cy BBU on 47C-601 trips TMP-1 in 14 cycles	O	O	O	O	O	O	O	O	O
c108a	c108a-91H-523_BBU_nrecl-BASECASE.out 1 phase fault on L5041 at 91H opens from 99h in 9 cycle 91H-523 breaker fails No BBU installed; all gens on	O	O	O	O	O	O	O	O	O
c108b	c108b-91H-523_BBU_nrecl-BASECASE.out 1 phase fault on L5041 at 91H opens from 99h in 9 cycle 91H-523 breaker fails No BBU installed; TC 1 off	O	O	O	O	O	O	O	O	O
c108c	c108c-91H-523_BBU_nrecl-BASECASE.out 1 phase fault on L5041 at 91H opens from 99h in 9 cycle 91H-523 breaker fails No BBU installed; TC1 and 2 off	O	O	O	O	O	O	O	O	O
c108d	c108d-91H-523_BBU_nrecl-BASECASE.out 1 phase fault on L5041 at 91H opens from 99h in 9 cycle 91H-523 breaker fails No BBU installed; all TC off	O	O	O	O	O	O	O	O	O
c109	c109-101h-600_BBU_nrecl-BASECASE.out 1 phase fault on 101H-B62 101H-600 breaker fails BBU opertes in 15 cycles entire bus no reclosing	O	O	O	O	O	O	O	O	O
c110a	c110a-108h-609_BBU_nrecl-BASECASE.out 1 phase fault on L6009 at 108H 108H-609 breaker fails BBU opertes in 15 cycles B2 no reclosing; all BS on	O	O	O	O	O	O	O	O	O

Legend:
O - Results OK
1- SPS Required
2 - SPS Not Armed
3 - Line does not currently have dual high-speed protection but will be required
4 - Simulation halted due to Vestas V90 model see 12.3
5 - Stage 1 UFLS
6 - Stage I and 2 UFLS

Table 4 Dynamics Results

Number	Filename Fault / Disturbance Description	Winter			Summer			Light		Extreme
		2013WP-NS-0	2013WP-DSM-NS-200	2013WP-NS-import-200	2013SP-NS-0	2013SP-NS-250	2013SP-NS+200	2013LL-NS-0	2013LL-NS-notr	2013XP
c110b	c110b-108h-609_BBU_nrecl-BASECASE.out 1 phase fault on L6009 at 108H 108H-609 breaker fails BBU opertes in 15 cycles B2 no reclosing no BS on	O	O	O	O	O	O	O	O	O
e101	e101-103H-600-1p_nrecl-BASECASE.out 1 phase fault on Bus tie breaker 103H-600 at Lakeside Clears 103H 138kV bus	O	O	O	O	O	O	O	O	O
e102	e102-47C-602-1p_nrecl-BASECASE.out 1 phase fault on breaker 47C-602 at Stora Clears 2 TMP	O	O	O	O	O	O	O	O	O
e103a	e103a-91H-523-1p_nrecl-BASECASE.out 1 phase fault on breaker 91H-523 at Tuft's Cove 69kV Clears 5041 and T11 All TC on	O	O	O	O	O	O	O	O	O
e103b	e103b-91H-523-1p_nrecl-BASECASE.out 1 phase fault on breaker 91H-523 at Tuft's Cove 69kV Clears 5041 and T11 TC1 off	O	O	O	O	O	O	O	O	O
e103c	e103c-91H-523-1p_nrecl-BASECASE.out 1 phase fault on breaker 91H-523 at Tuft's Cove 69kV Clears 5041 and T11 TC1 and 2 off	O	O	O	O	O	O	O	O	O
e103d	e103d-91H-523-1p_nrecl-BASECASE.out 1 phase fault on breaker 91H-523 at Tuft's Cove 69kV Clears 5041 and T11 All TC off	O	O	O	O	O	O	O	O	O
e104a	e104a-104H-600-1p_nrecl-BASECASE.out 1 phase fault on breaker 104h-600 at burnside 138kv Clears bus; all burnside on	O	O	O	O	O	O	O	O	O
e104b	e104b-104H-600-1p_nrecl-BASECASE.out 1 phase fault on breaker 104h-600 at burnside 138kv Clears bus; all burnside off	O	O	O	O	O	O	O	O	O
g101	g101-79N-B61-SPS_delay_nrecl-BASECASE.out 1 phase fault on Bus B61 at Hopewell Failure of SPS Breaker Clears bus and transformer, open ends L8003 trip L8004	O	O	O	O	O	O	O	O	O

Legend:
O - Results OK
1- SPS Required
2 - SPS Not Armed
3 - Line does not currently have dual high-speed protection but will be required
4 - Simulation halted due to Vestas V90 model see 12.3
5 - Stage 1 UFLS
6 - Stage I and 2 UFLS

Figures

Figure 1 - General Transmission Layout

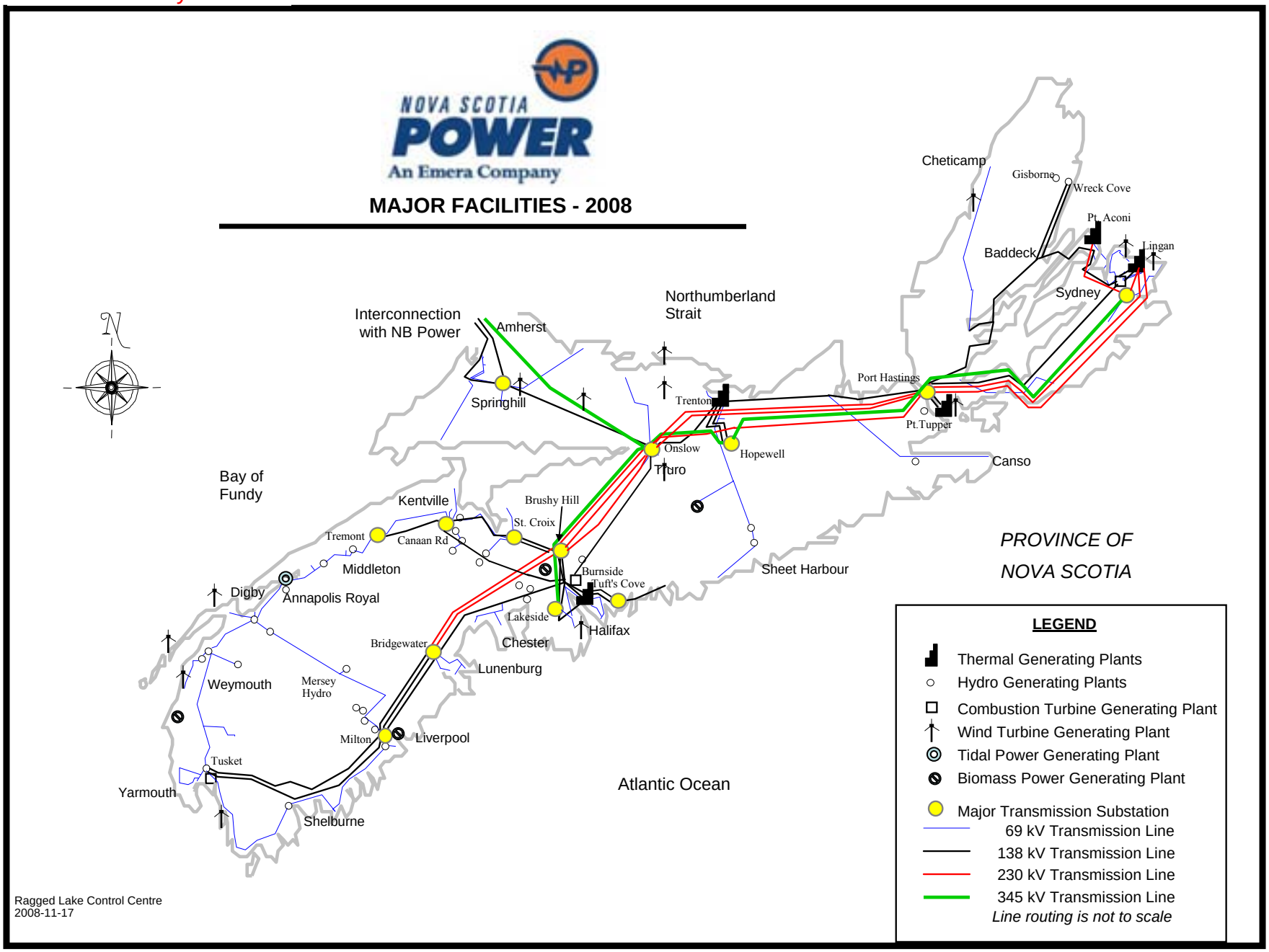

Figure 2 – Comparison of 2008 Forecast with Previous

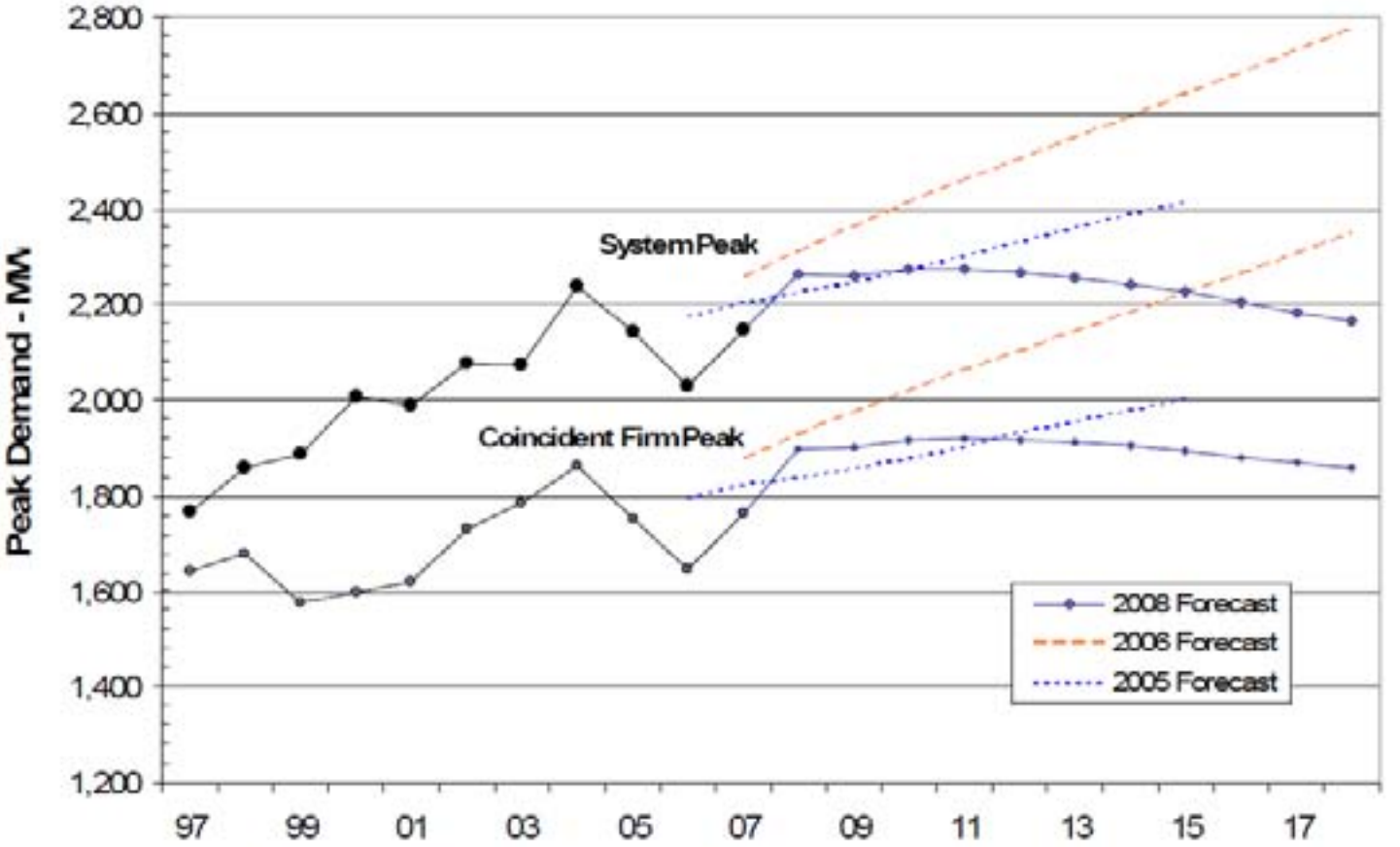

Figure 3A

Annual Net System Peak (Winter ending)

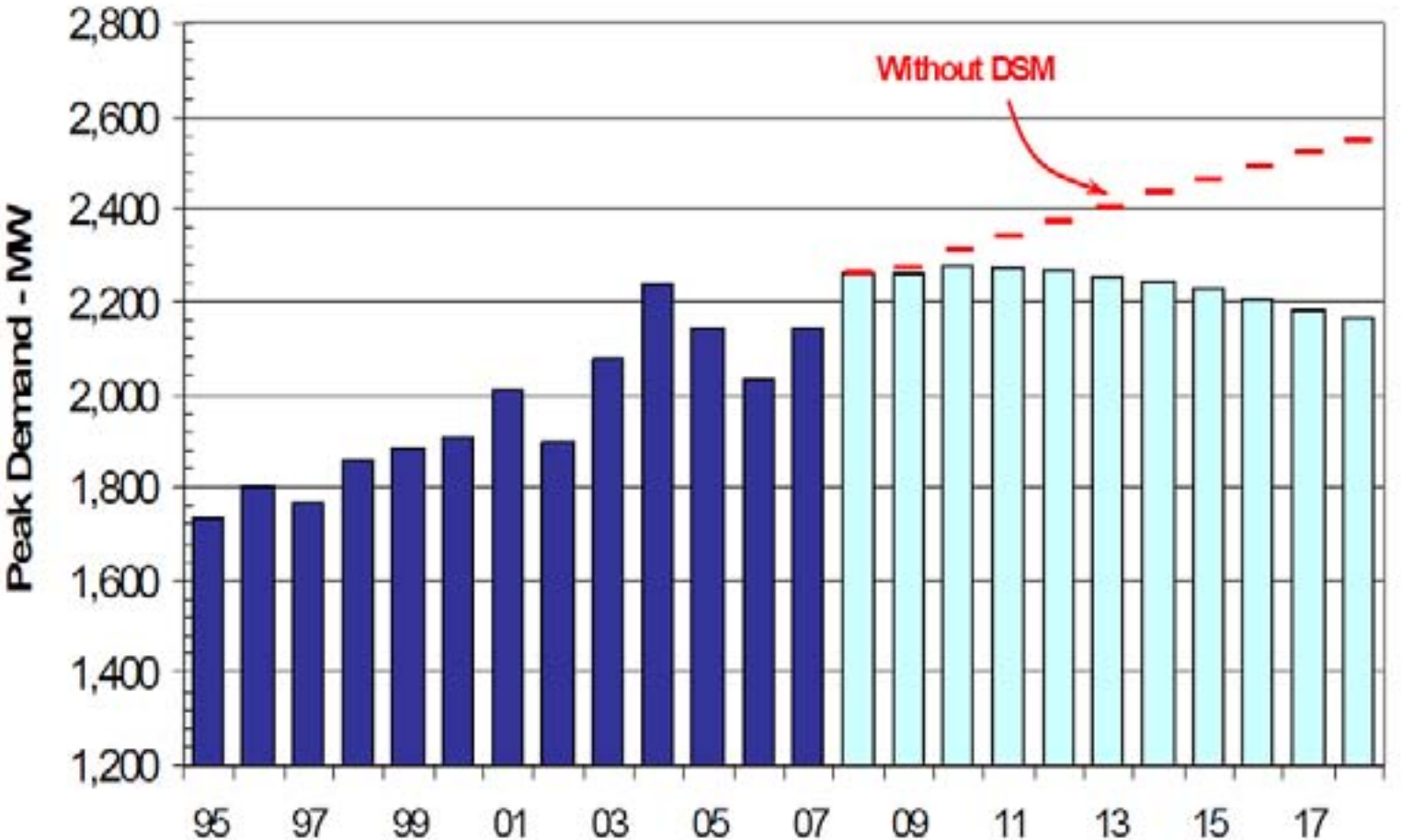

Figure 3B

Annual System Peak, High and Low Scenarios

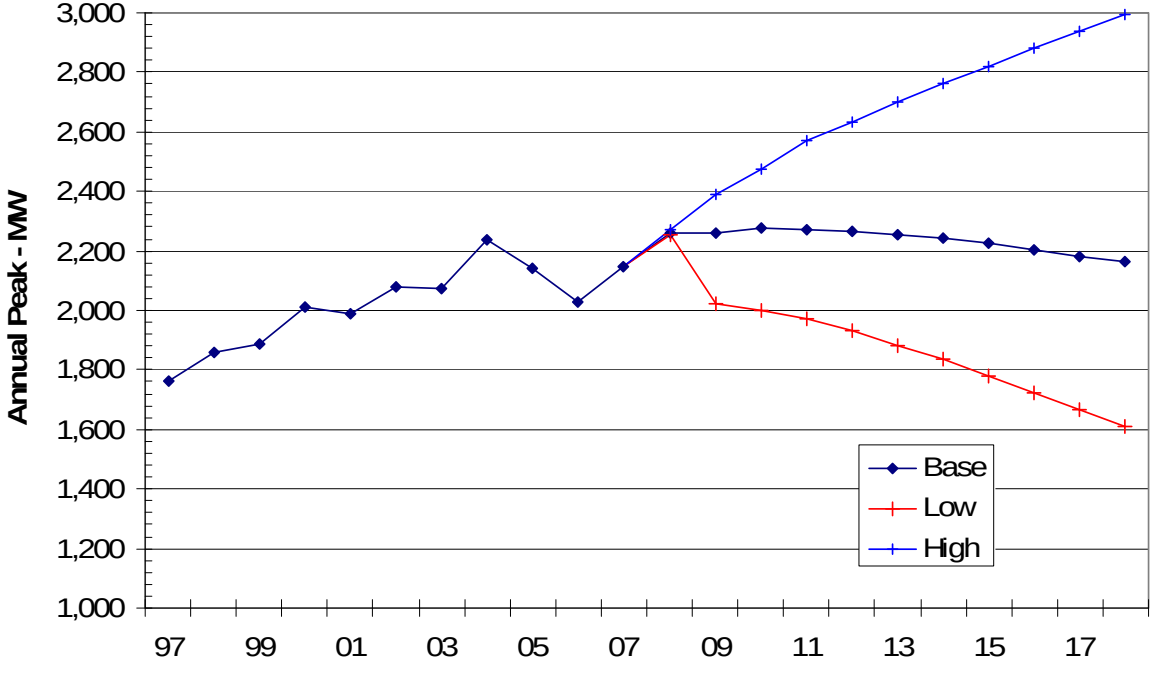

Figure 4
New Generation Sites

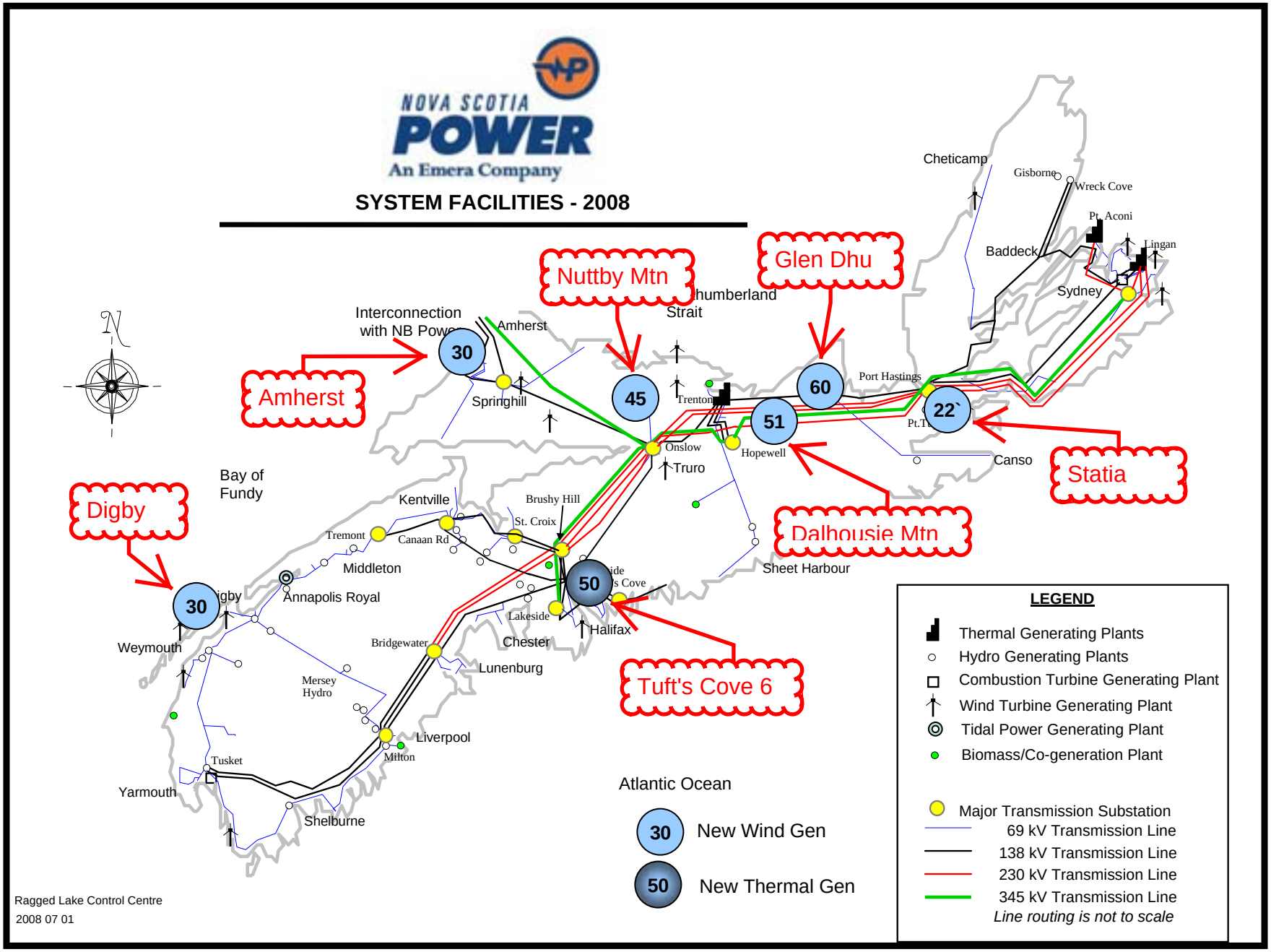

Figure 5
New BPS Buses

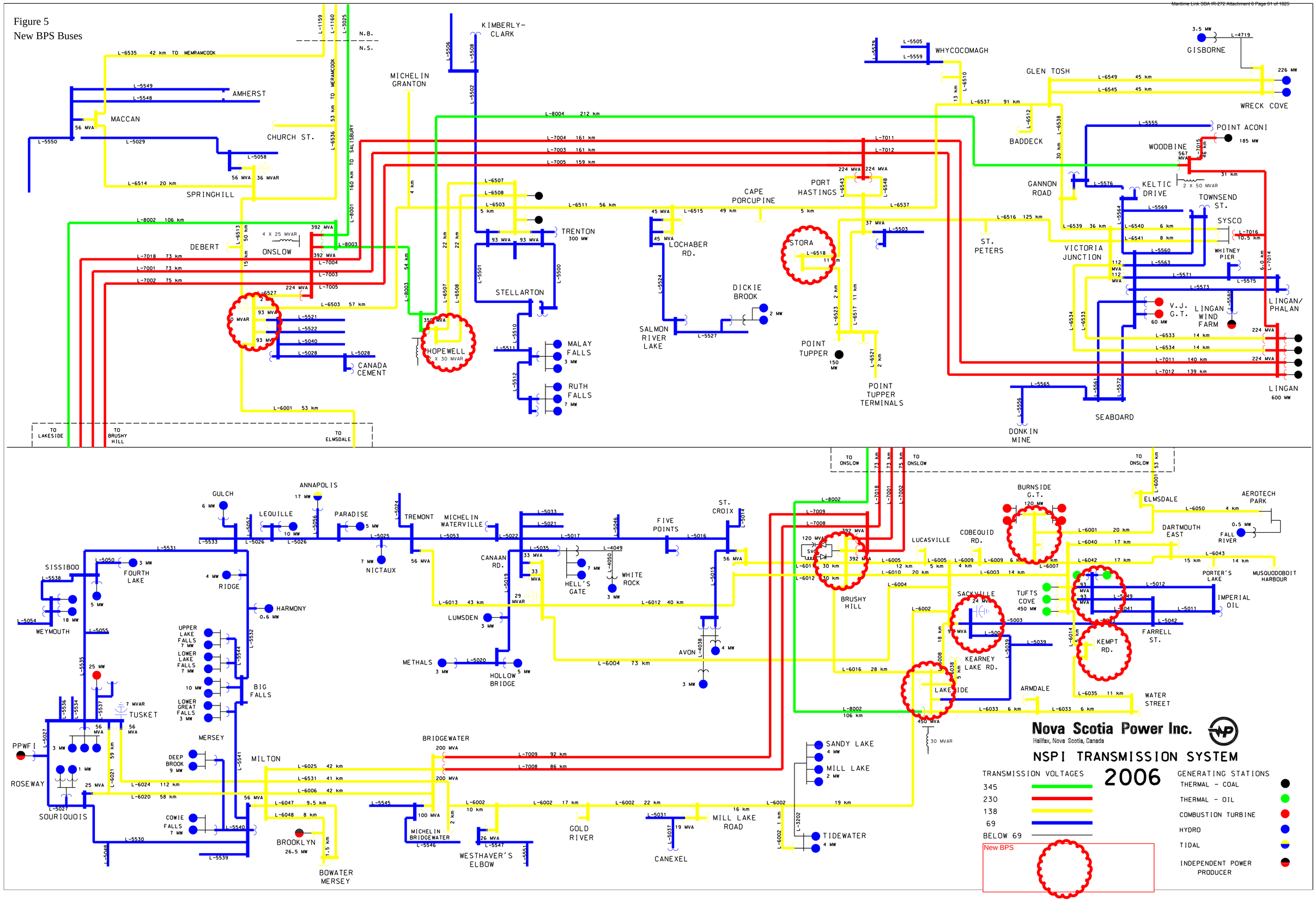

Y100P 30000001

Figure 6

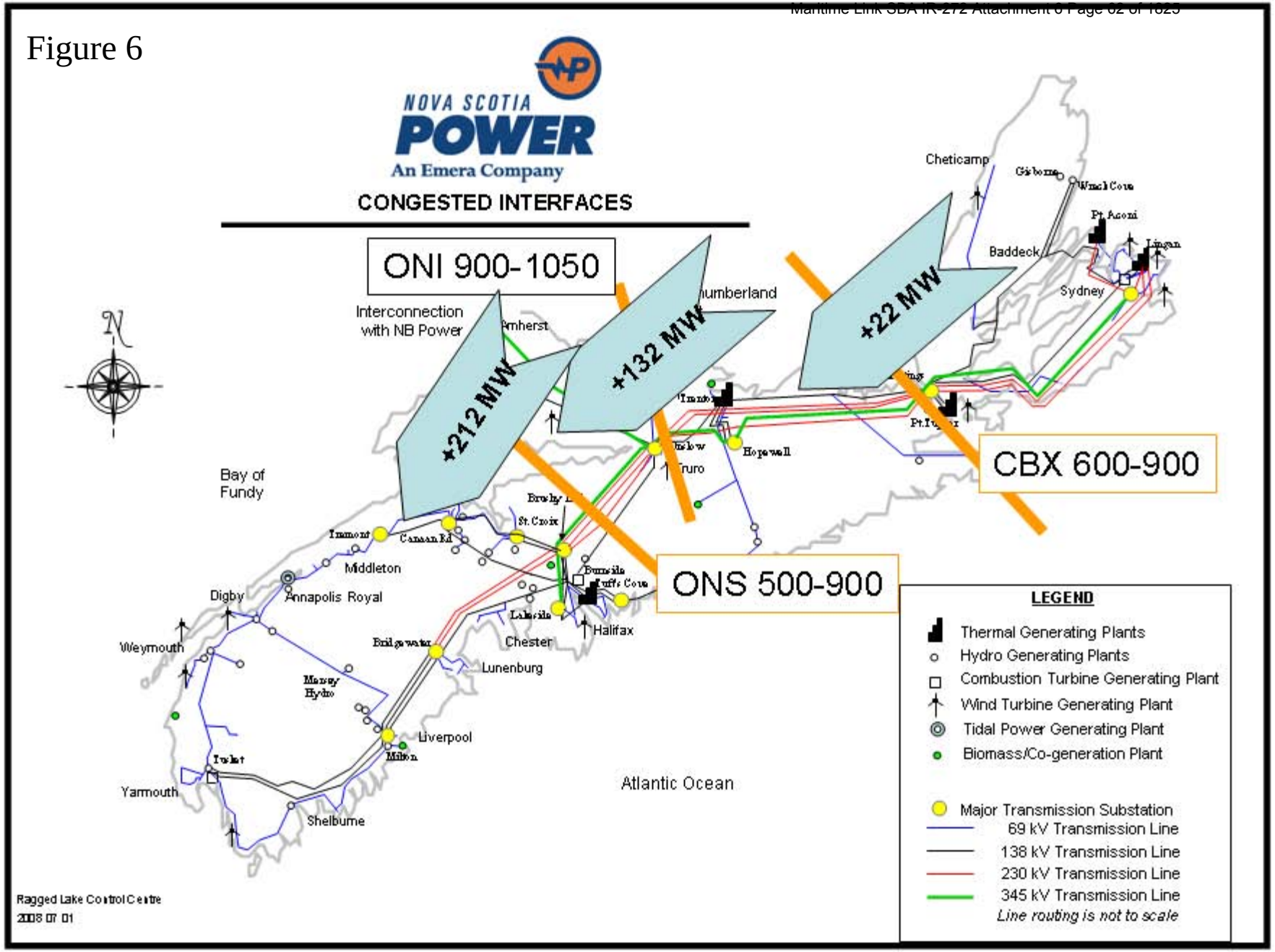
NOVA SCOTIA POWER
An Emera Company
CONGESTED INTERFACES
ONI 900-1050
+212 MW
+132 MW
+22 MW
CBX 600-900
ONS 500-900
Interconnection with NB Power
Amherst
Cheticamp
Baddeck
Sydney
Hopewell
Truro
Bay of Fundy
Digby
Annapolis Royal
Middleton
Weymouth
Yarmouth
Shelburne
Bridgewater
Lunenburg
Chester
Halifax
Liverpool
Atlantic Ocean
LEGEND
Thermal Generating Plants
Hydro Generating Plants
Combustion Turbine Generating Plant
Wind Turbine Generating Plant
Tidal Power Generating Plant
Biomass/Co-generation Plant
Major Transmission Substation
69 kV Transmission Line
138 kV Transmission Line
230 kV Transmission Line
345 kV Transmission Line
Line routing is not to scale
Ragged Lake Control Centre
2008 07 01

NSX 0.2 MW
CBX 731.8 MW
ONI 961.2 MW
ONS 850.7 MW

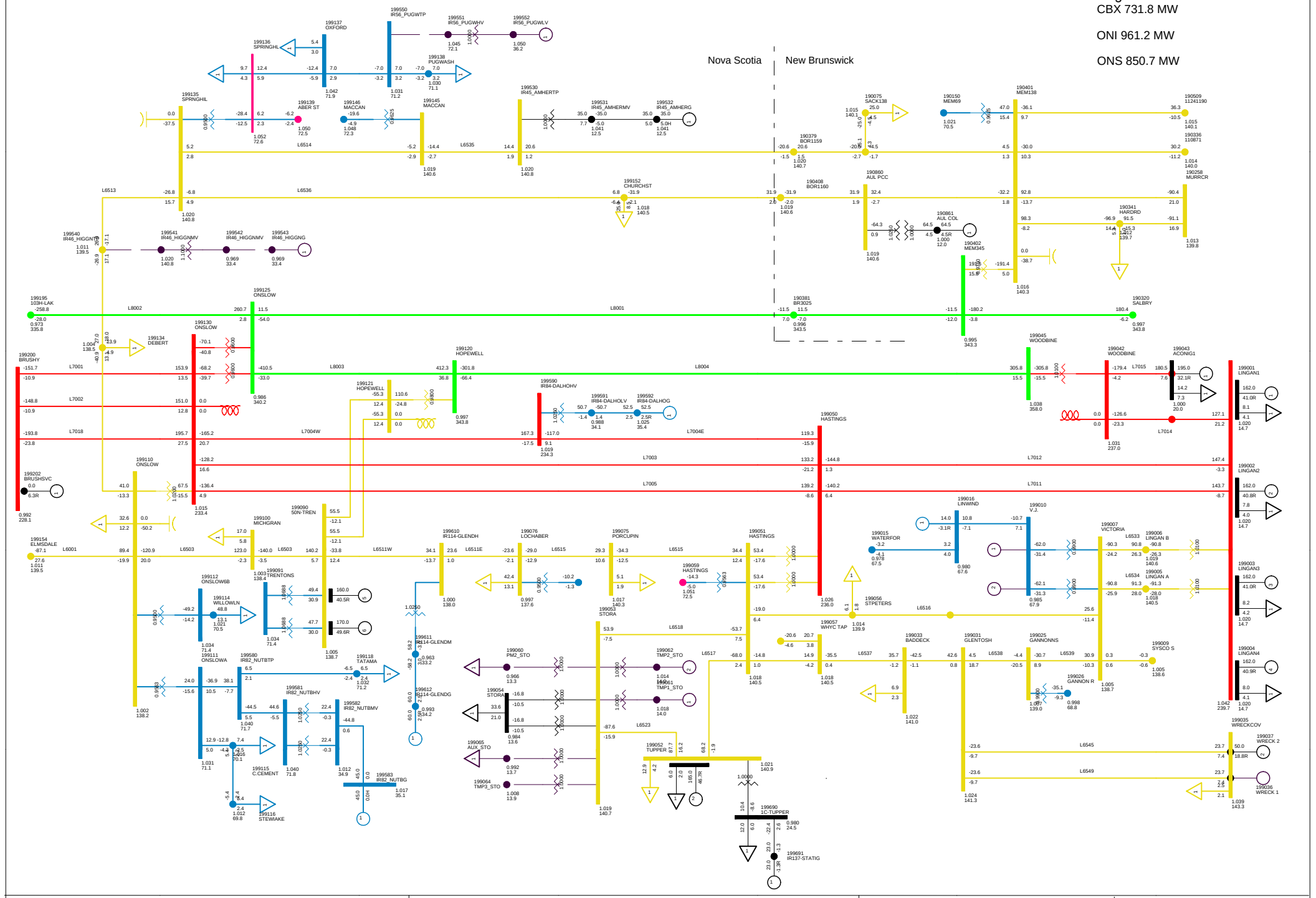

2013 WINTER PEAK STORA MIN
NS-NB=0; NB-NE=500; CBX=732; ONI=961 ONS=851
NORTHEASTERN NS TUE, OCT 28 2008 14:07

Total Wind Gen: 290.1 MW | Gross Tupper 165.0 MW | Gross Wreck Cove 50.0 MW | Net Stora Load 33.7 MW
Gross Lingan 648.0 MW | Gross Trenton 330.0 MW | Gross Gas Turbine 24.0 MW | Total BMPC Load 75.5 MW
Gross Pt Aconi 195.0 MW | Gross Tuft's Cove 390.8 MW | Gross Small Hydro 182.4 MW

Bus - VOLTAGE (KV/PU)
Branch - MW/MVAR
Equipment - MW/MVAR
110.0%RATEB
1.050OV 0.950UV
KV: <=25.000 <=69.000 <=138.000 <=230.000 <=345.000 >345.000

Figure 7A

Total Wind Gen: 290.1 MW | Gross Tupper 165.0 MW | Gross Wreck Cove 50.0 MW

Gross Lingan 648.0 MW | Gross Trenton 330.0 MW | Gross Gas Turbine 24.0 MW

Gross Pt Aconi 195.0 MW | Gross Tuft's Cove 390.8 MW | Gross Small Hydro 182.4 MW

Net Stora Load 33.7 MW | Total BMPC Load 75.5 MW

NSX 0.2 MW

CBX 731.8 MW

ONI 961.2 MW

ONS 850.7 MW

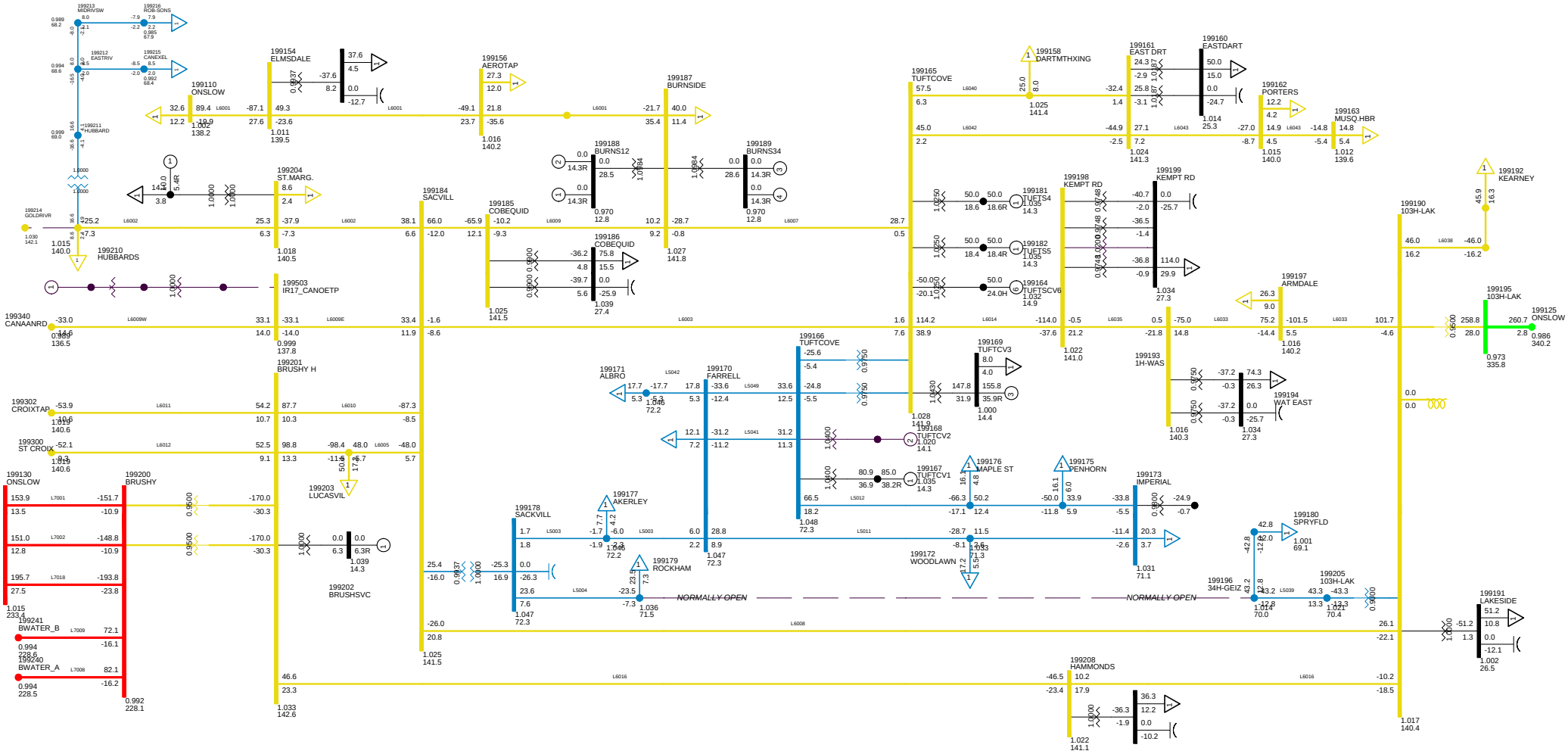

2013 WINTER PEAK STORA MIN
NS-NB=0; NB-NE=500; CBX=732; ONI=961 ONS=851
METRO ZONE TUE, OCT 28 2008 14:09

Bus - VOLTAGE (KV/PU)
Branch - MW/MVAR
Equipment - MW/MVAR
100.0%RATE B
1.050OV 0.950UV
KV: <=30.000 <=69.000 <=138.000 <=230.000 <=345.000 >345.000

Figure 7B

NSX 199.8 MW
CBX 789.8 MW
ONI 1011.7 MW
ONS 700.3 MW

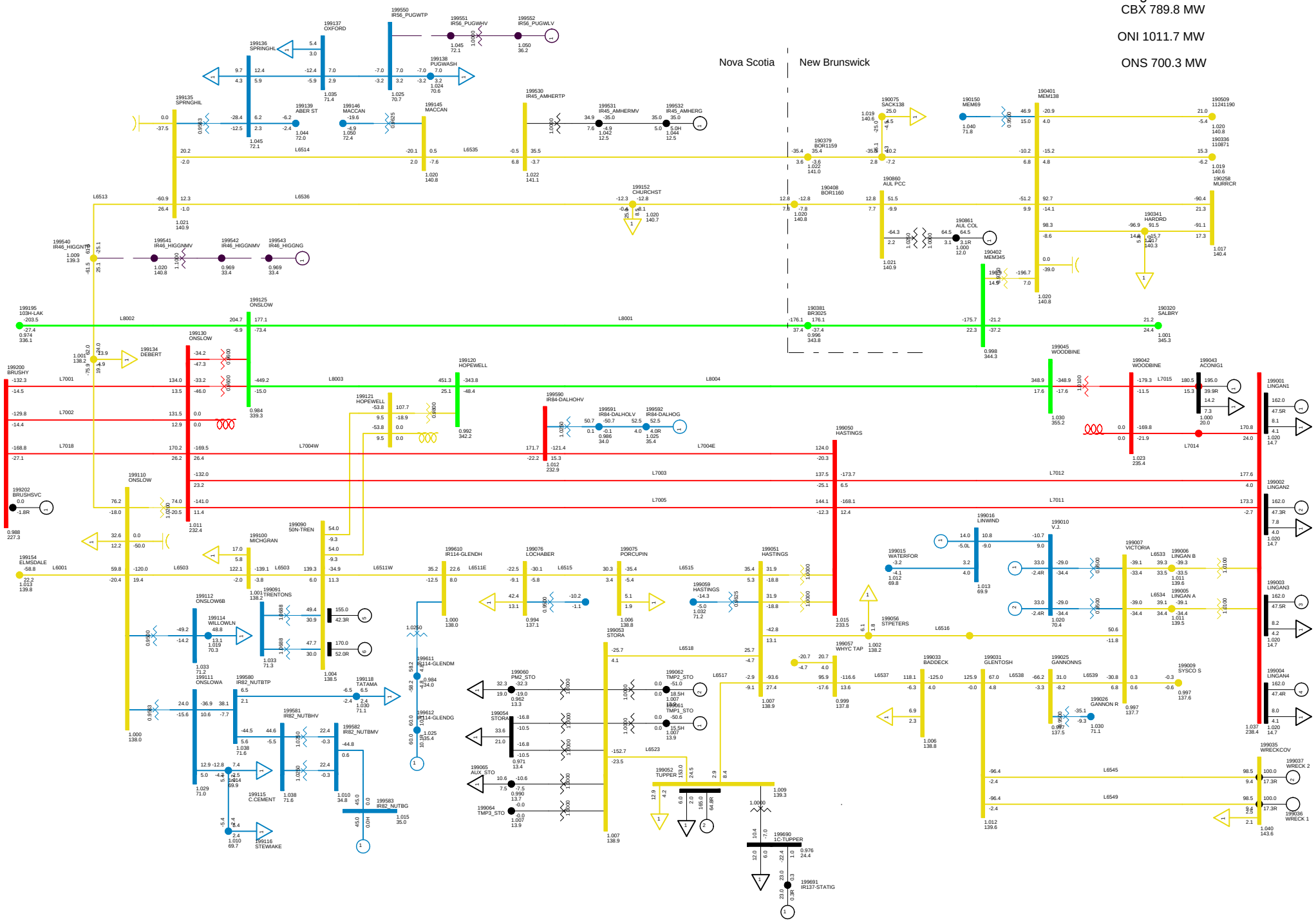

2013 WINTER PEAK WITH DSM - DELIVER RESERVE
NS-NB=200; NB-NE=500; CBX=790; ONI=1015 ONS=704
NORTHEASTERN NS WED, DEC 10 2008 9:45

Total Wind Gen: 290.1 MW
Gross Lingan 648.0 MW
Gross Pt Aconi 195.0 MW
Gross Tupper 165.0 MW
Gross Trenton 325.0 MW
Gross Tuft's Cove 455.2 MW
Gross Wreck Cove 200.0 MW
Gross Gas Turbine 210.0 MW
Gross Small Hydro 182.4 MW
Total Stora Load 178.4 MW
Total BMPC Load 108.5 MW

Bus - VOLTAGE (KV/PU)
Branch - MW/MVAR
Equipment - MW/MVAR
110.0%RATEB
1.0500V 0.9500V
KV: <=25.000 <=69.000 <=138.000 <=230.000 <=345.000 >345.000

Figure 8A

Total Wind Gen: 290.1 MW | Gross Tupper 165.0 MW | Gross Wreck Cove 200.0 MW

Gross Lingan 648.0 MW | Gross Trenton 325.0 MW | Gross Gas Turbine 210.0 MW

Gross Pt Aconi 195.0 MW | Gross Tuft's Cove 455.2 MW | Gross Small Hydro 182.4 MW

Net Stora Load 178.4 MW | Total BMPC Load 108.5 MW

NSX 199.8 MW

CBX 789.8 MW

ONI 1011.7 MW

ONS 700.3 MW

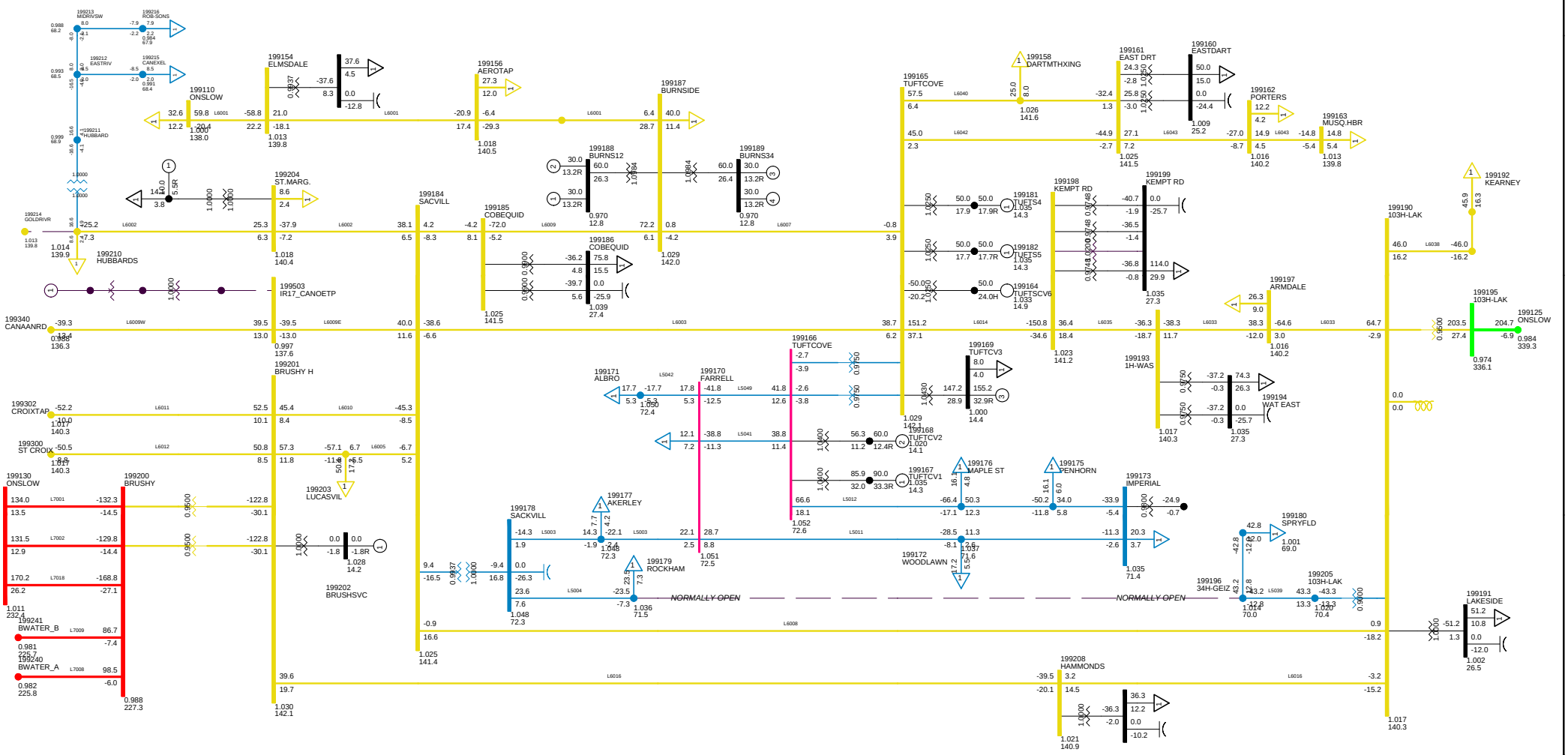

2013 WINTER PEAK WITH DSM - DELIVER RESERVE
NS-NB=200; NB-NE=500; CBX=790; ONI=1015 ONS=704
METRO ZONE WED, DEC 10 2008 9:49

Bus - VOLTAGE (KV/PU)
Branch - MW/MVAR
Equipment - MW/MVAR
100.0%RATE8
1.050OV 0.950UV
KV: <=30.000 <=69.000 <=138.000 <=230.000 <=345.000 >345.000

Figure 8B

NSX -199.9 MW

CBX 543.8 MW

ONI 773.3 MW

ONS 862.9 MW

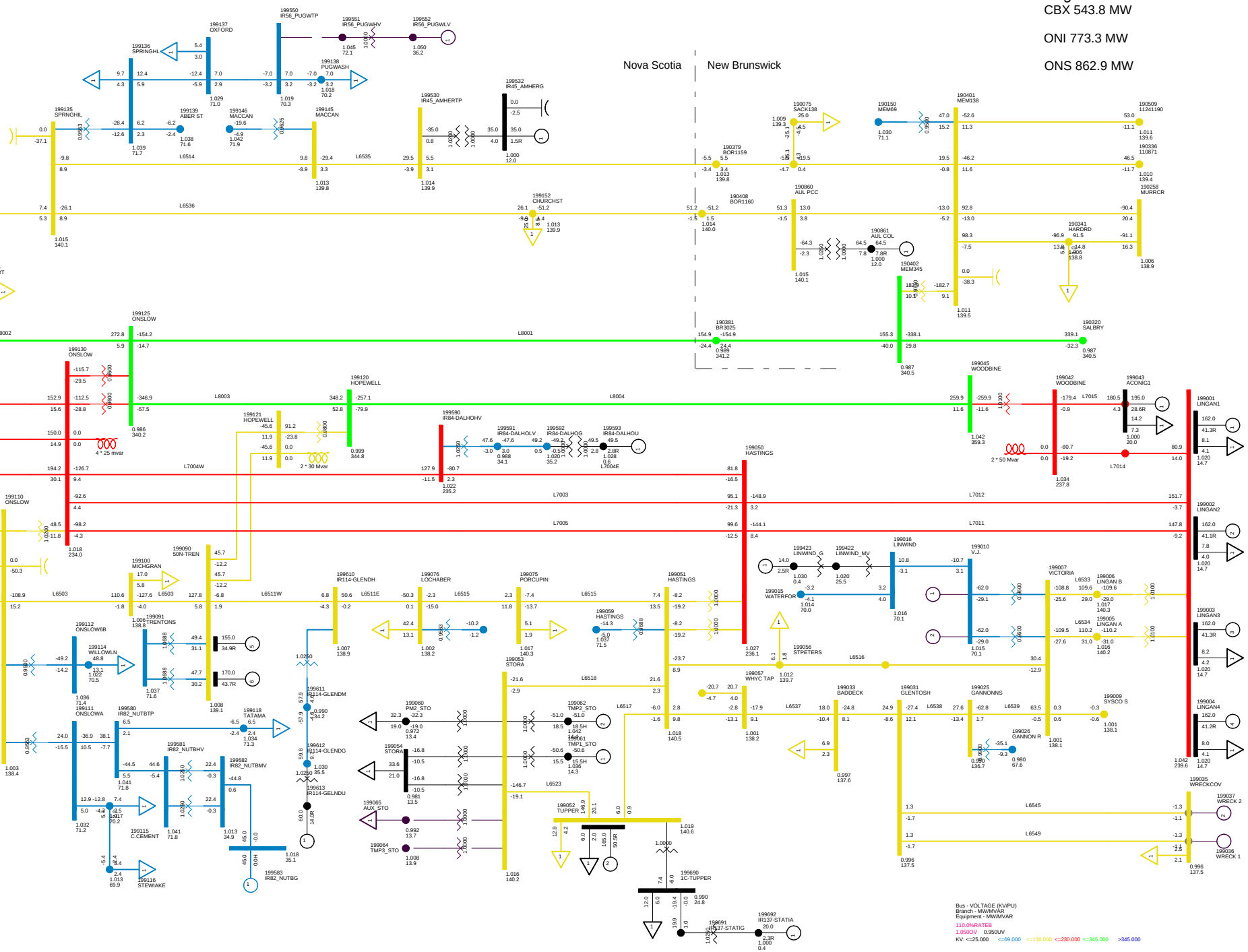

2013 WINTER PEAK STORA 167, NS LOAD 2371
NS-NB=-200; NB-NE=300; CBX=543; ONI=773 ONS=863
NORTHEASTERN NS WED, DEC 10 2008 11:21

Total Wind Gen: 140.6 MW
Gross Lingan 648.0 MW
Gross Pt Aconi 195.0 MW

Gross Tupper 165.0 MW
Gross Trenton 325.0 MW
Gross Tuft's Cove 378.1 MW

Gross Wreck Cove 0.0 MW
Gross Gas Turbine 24.0 MW
Gross Small Hydro 182.4 MW

Net Stora Load 168.3 MW
Total BMPC Load 75.5 MW

Figure 9A

Total Wind Gen: 140.6 MW | Gross Tupper 165.0 MW | Gross Wreck Cove 0.0 MW

Gross Lingan 648.0 MW | Gross Trenton 325.0 MW | Gross Gas Turbine 24.0 MW

Gross Pt Aconi 195.0 MW | Gross Tuft's Cove 378.1 MW | Gross Small Hydro 182.4 MW

Net Stora Load 168.3 MW | Total BMPC Load 75.5 MW

NSX -199.9 MW

CBX 543.8 MW

ONI 773.3 MW

ONS 862.9 MW

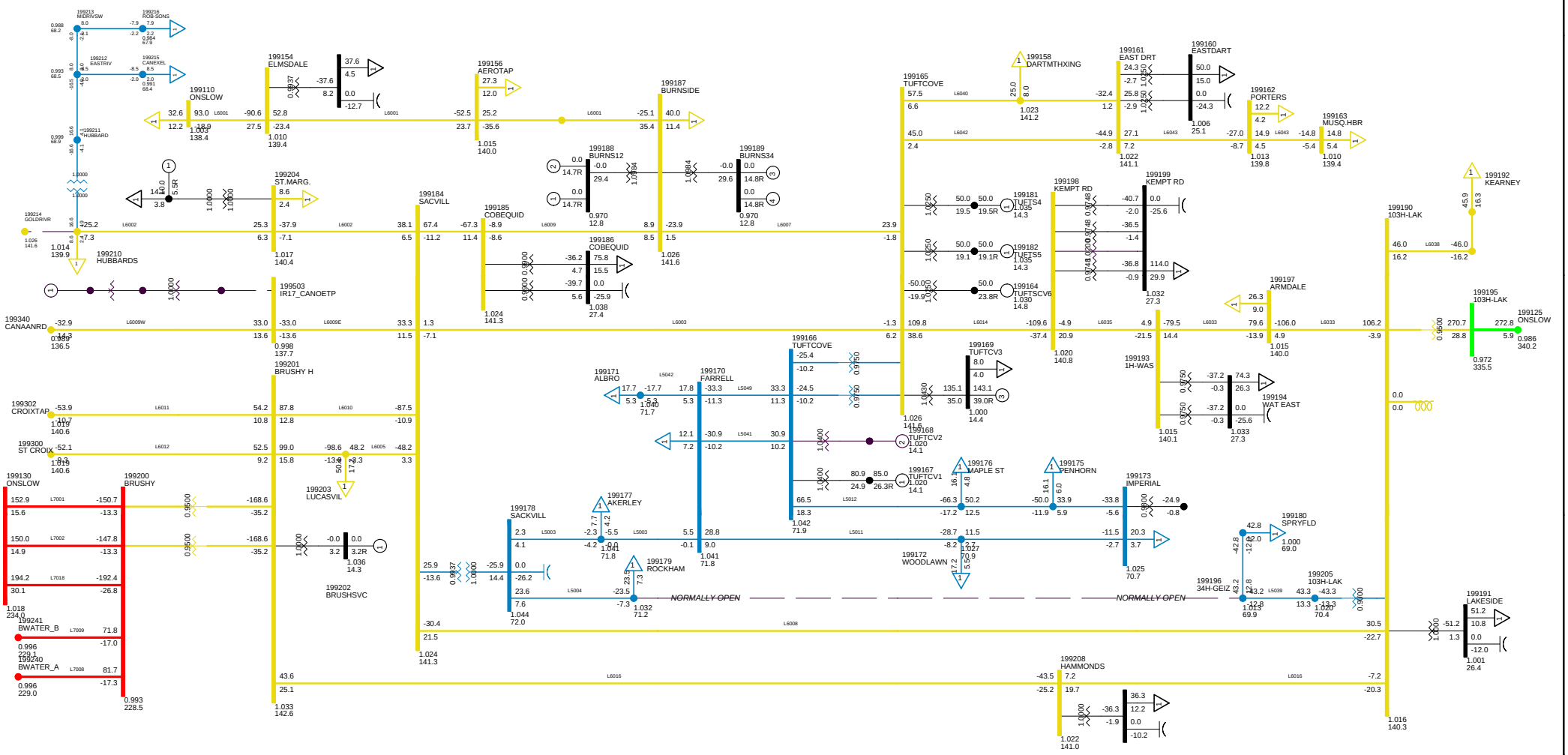

2013 WINTER PEAK STORA 167, NS LOAD 2371
NS-NB=-200; NB-NE=300; CBX=543; ONI=773 ONS=863
METRO ZONE WED, DEC 10 2008 11:25

Bus - VOLTAGE (KV/PU)
Branch - MW/MVAR
Equipment - MW/MVAR
100.0%RATE B
1.050OV 0.950UV
KV: <=30.000 <=69.000 <=138.000 <=230.000 <=345.000 >345.000

Figure 9B

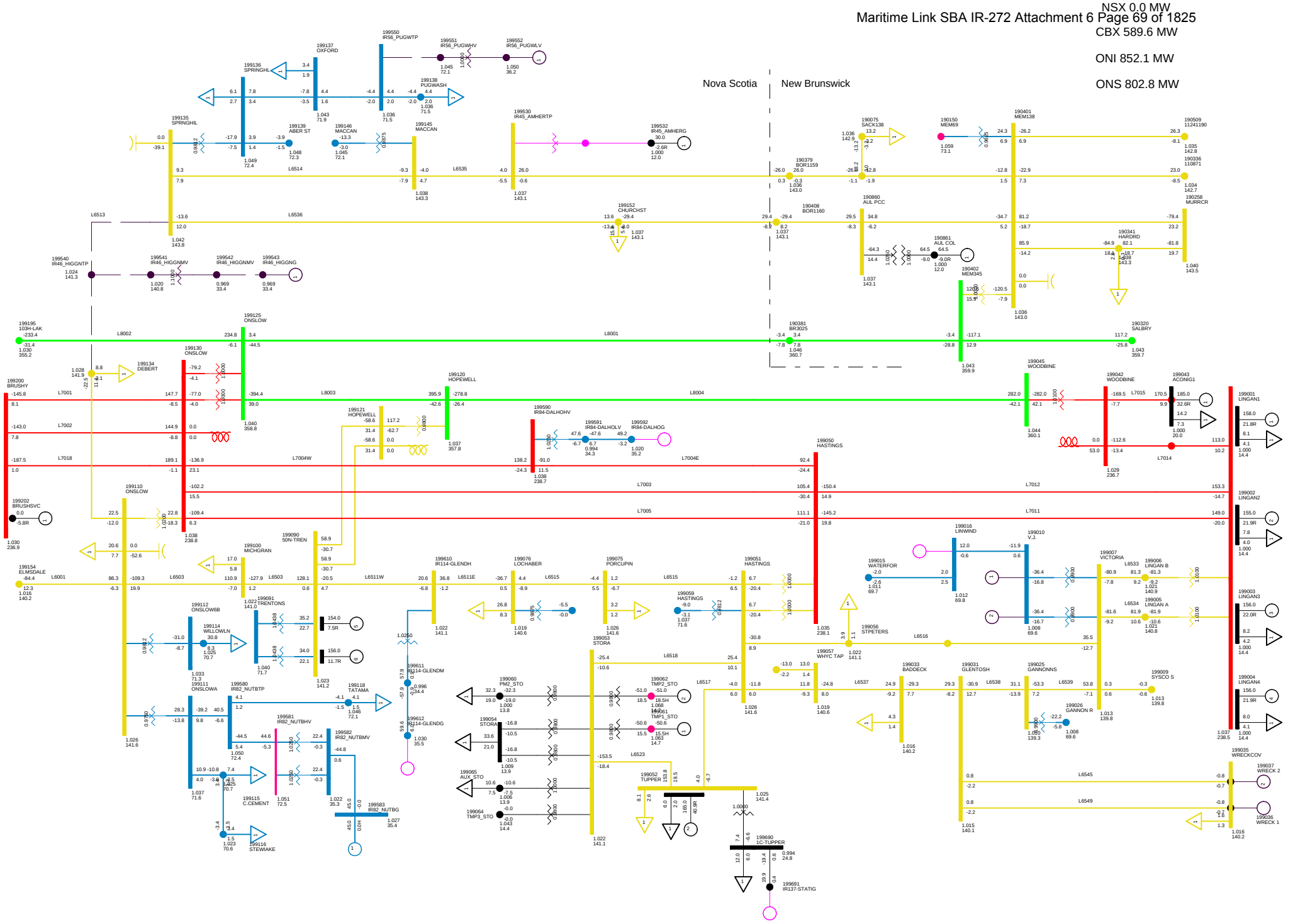

2010 SUMMER PEAK, NSLOAD=1700
NS-NB=0 NB-NE=1000; CBX=589; ONI=852 ONS=803
NORTHEASTERN NS FRI, FEB 06 2009 15:20

Total Wind Gen: 105.0 MW | Gross Tupper 165.0 MW | Gross Wreck Cove 0.0 MW | Net Stora Load 178.9 MW
Gross Lingan 625.0 MW | Gross Trenton 310.0 MW | Gross Gas Turbine 0.0 MW | Total BMPC Load 108.5 MW
Gross Pt Aconi 185.0 MW | Gross Tuft's Cove 153.2 MW | Gross Small Hydro 42.9 MW

Bus - VOLTAGE (KV/PU)
Branch - MW/MVAR
Equipment - MW/MVAR
110.0%RATEA
1.0500V 0.950UV
KV: <=25.000 <=69.000 <=138.000 <=230.000 <=345.000 >345.000

Figure 10A

Total Wind Gen: 105.0 MW
Gross Tupper 165.0 MW
Gross Wreck Cove 0.0 MW
Gross Lingan 625.0 MW
Gross Trenton 310.0 MW
Gross Gas Turbine 0.0 MW
Gross Pt Aconi 185.0 MW
Gross Tuft's Cove 153.2 MW
Gross Small Hydro 42.9 MW
Net Stora Load 178.9 MW
Total BMPC Load 108.5 MW

NSX 0.0 MW
CBX 589.6 MW
ONI 852.1 MW
ONS 802.8 MW

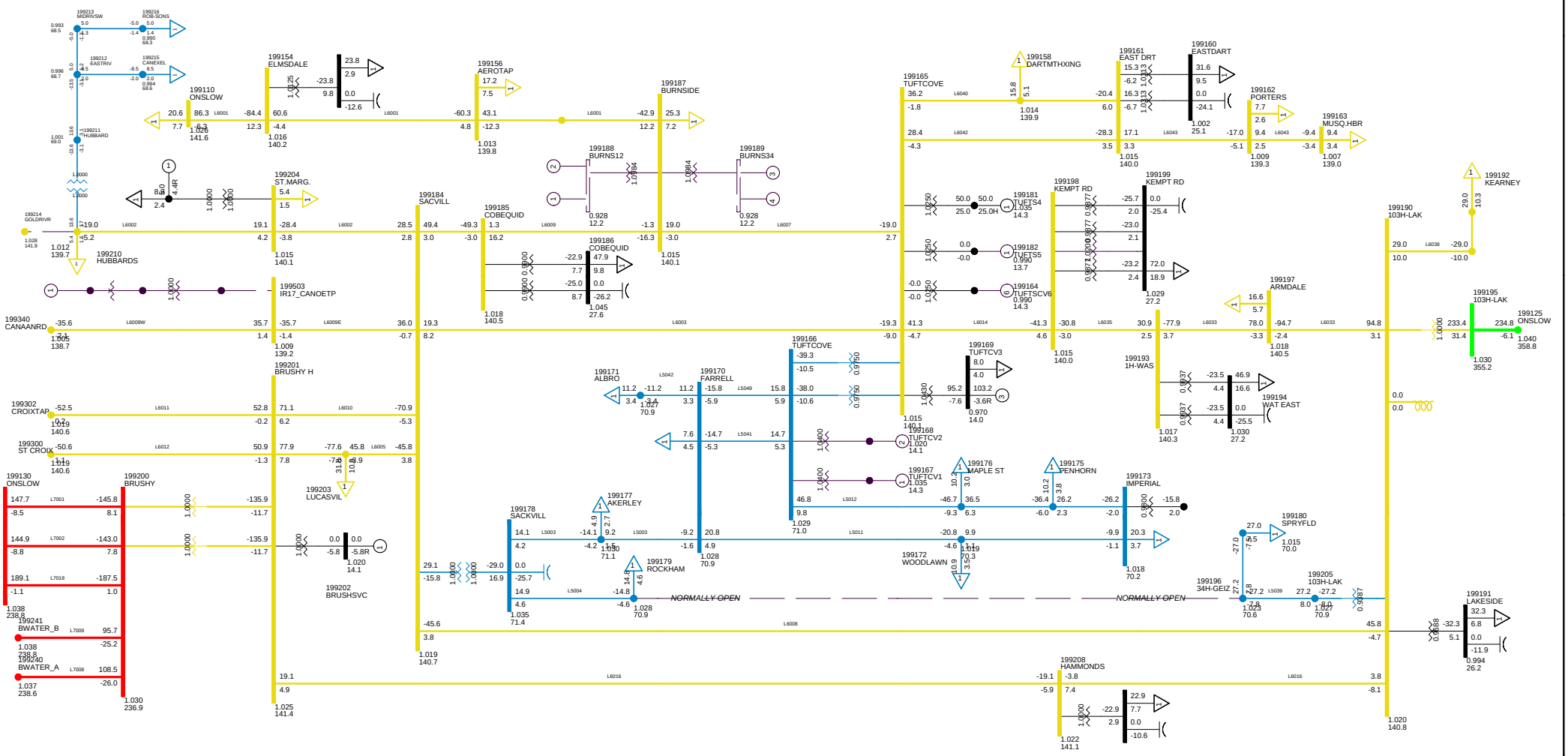

2010 SUMMER PEAK, NSLOAD=1700
NS-NB=0 NB-NE=1000; CBX=589; ONI=852 ONS=803
METRO ZONE FRI, FEB 06 2009 15:22

Bus - VOLTAGE (KV/PU)
Branch - MW/MVAR
Equipment - MW/MVAR
100.0%RATEA
1.050OV 0.950UV
KV: <=30.000 <=69.000 <=138.000 <=230.000 <=345.000 >345.000

Figure 10B

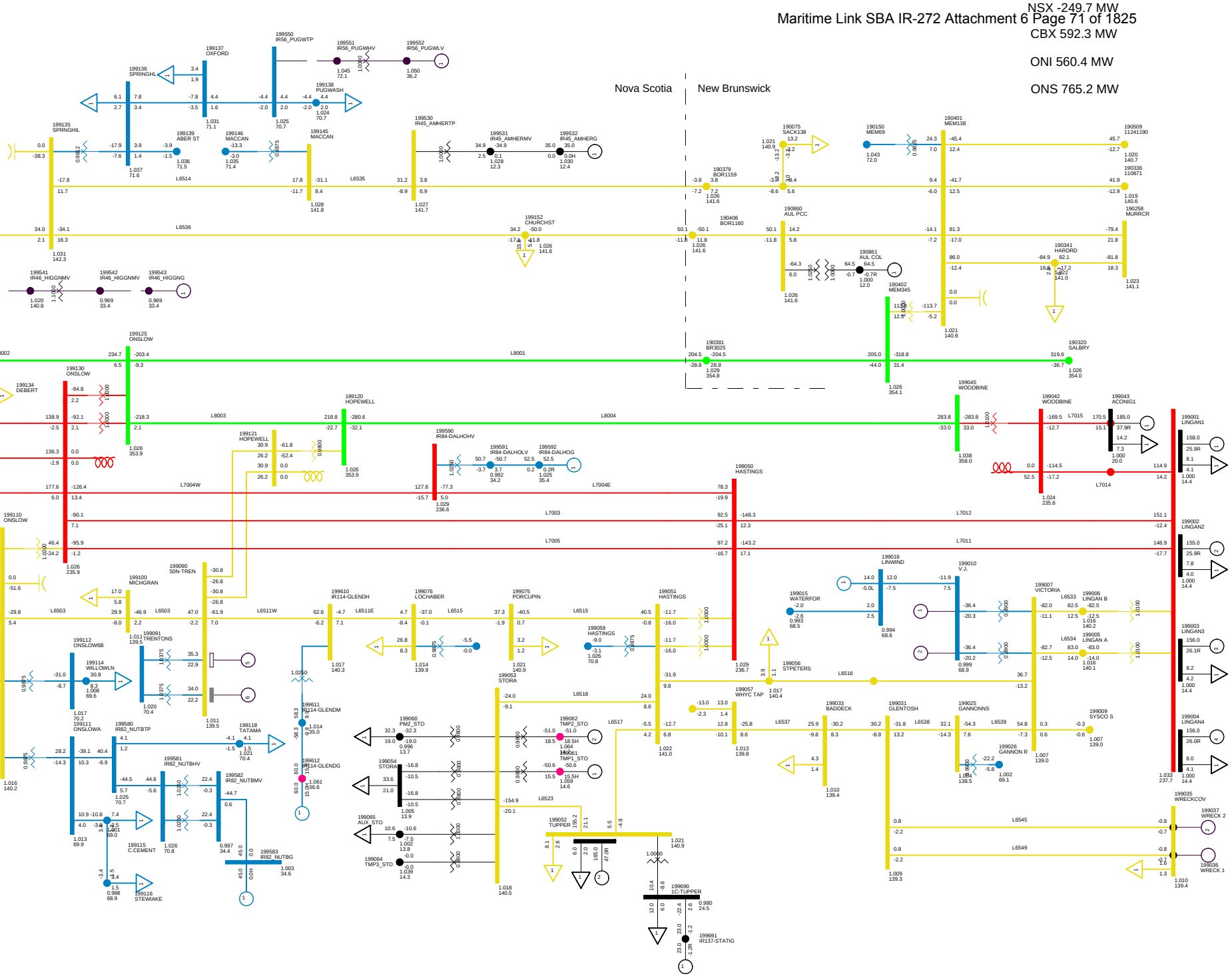

2010 SUMMER PEAK, NSLOAD=1700
NS-NB=-250; NB-NE=1000; CBX=592; ONI=560 ONS=765
NORTHEASTERN NS TUE, DEC 09 2008 22:34

Total Wind Gen: 290.1 MW | Gross Tupper 165.0 MW | Gross Wreck Cove 0.0 MW | Net Stora Load 178.9 MW
Gross Lingan 625.0 MW | Gross Trenton 0.0 MW | Gross Gas Turbine 0.0 MW | Total BMPC Load 108.5 MW
Gross Pt Aconi 185.0 MW | Gross Tuft's Cove 158.6 MW | Gross Small Hydro 42.9 MW

Bus - VOLTAGE (KV/PU)
Branch - MW/MVAR
Equipment - MW/MVAR
110.0%RATE1
1.0500V 0.950UV
KV: <=25.000 <=69.000 <=138.000 <=230.000 <=345.000 >345.000

Figure 11A

Total Wind Gen: 290.1 MW | Gross Tupper 165.0 MW | Gross Wreck Cove 0.0 MW

Gross Lingan 625.0 MW | Gross Trenton 0.0 MW | Gross Gas Turbine 0.0 MW

Gross Pt Aconi 185.0 MW | Gross Tuft's Cove 158.6 MW | Gross Small Hydro 42.9 MW

Net Stora Load 178.9 MW | Total BMPC Load 108.5 MW

NSX -249.7 MW

CBX 592.3 MW

ONI 560.4 MW

ONS 765.2 MW

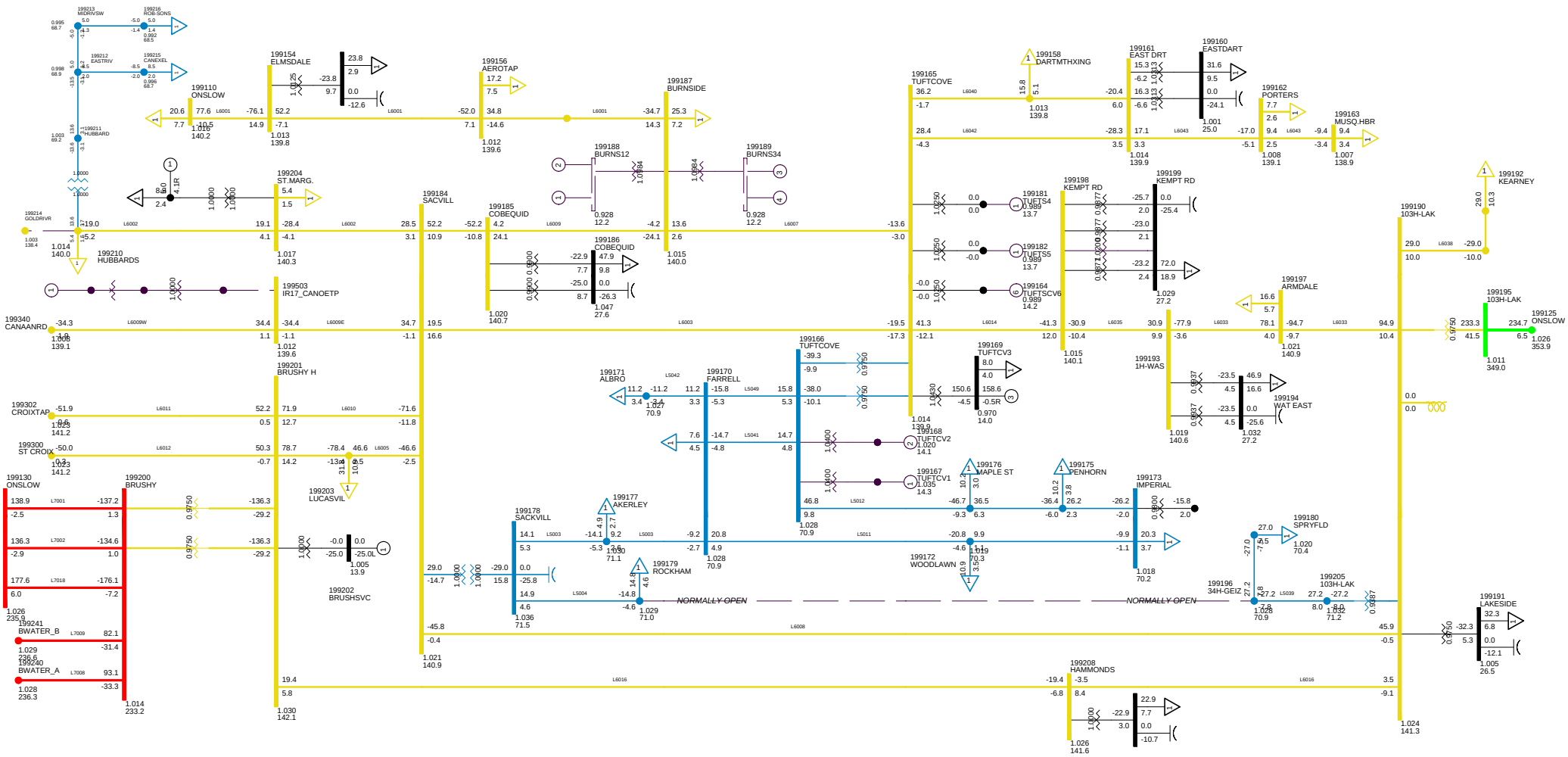

2010 SUMMER PEAK, NSLOAD=1700
NS-NB=-250; NB-NE=1000; CBX=592; ONI=560 ONS=765
METRO ZONE TUE, DEC 09 2008 22:38

Bus - VOLTAGE (KV/PU)
Branch - MW/MVAR
Equipment - MW/MVAR
100.0%RATEA
1.050OV 0.950UV
KV: <=30.000 <=69.000 <=138.000 <=230.000 <=345.000 >345.000

Figure 11B

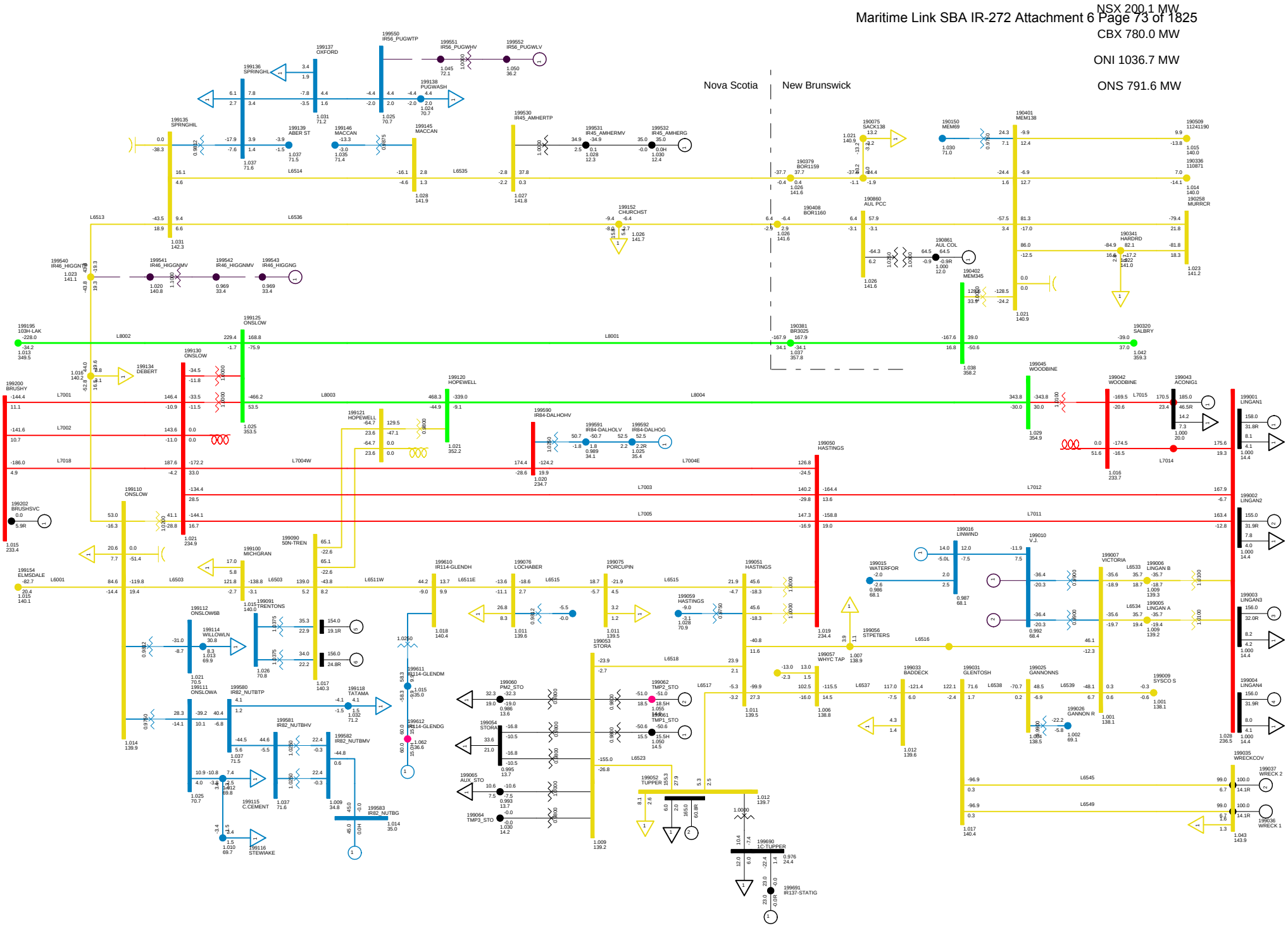

2010 SUMMER PEAK, NSLOAD=1700
NS-NB=+250; NB-NE=1000; CBX=780; ONI=1036 ONS=791
NORTHEASTERN NS TUE, DEC 09 2008 22:50

Total Wind Gen: 290.1 MW
Gross Lingan 625.0 MW
Gross Pt Aconi 185.0 MW
Gross Tupper 165.0 MW
Gross Trenton 310.0 MW
Gross Tuft's Cove 133.2 MW
Gross Wreck Cove 200.0 MW
Gross Gas Turbine 0.0 MW
Gross Small Hydro 42.9 MW
Net Stora Load 178.9 MW
Total BMPC Load 108.5 MW

Bus - VOLTAGE (KV/PU)
Branch - MW/MVAR
Equipment - MW/MVAR
110.0%RATEA
1.050OV 0.950UV
KV: <=25.000 <=69.000 <=138.000 <=230.000 <=345.000 >345.000

Figure 12A

Total Wind Gen: 290.1 MW
Gross Tupper 165.0 MW
Gross Wreck Cove 200.0 MW
Gross Lingan 625.0 MW
Gross Trenton 310.0 MW
Gross Gas Turbine 0.0 MW
Gross Pt Aconi 185.0 MW
Gross Tuft's Cove 133.2 MW
Gross Small Hydro 42.9 MW
Net Stora Load 178.9 MW
Total BMPC Load 108.5 MW

NSX 200.1 MW
CBX 780.0 MW
ONI 1036.7 MW
ONS 791.6 MW

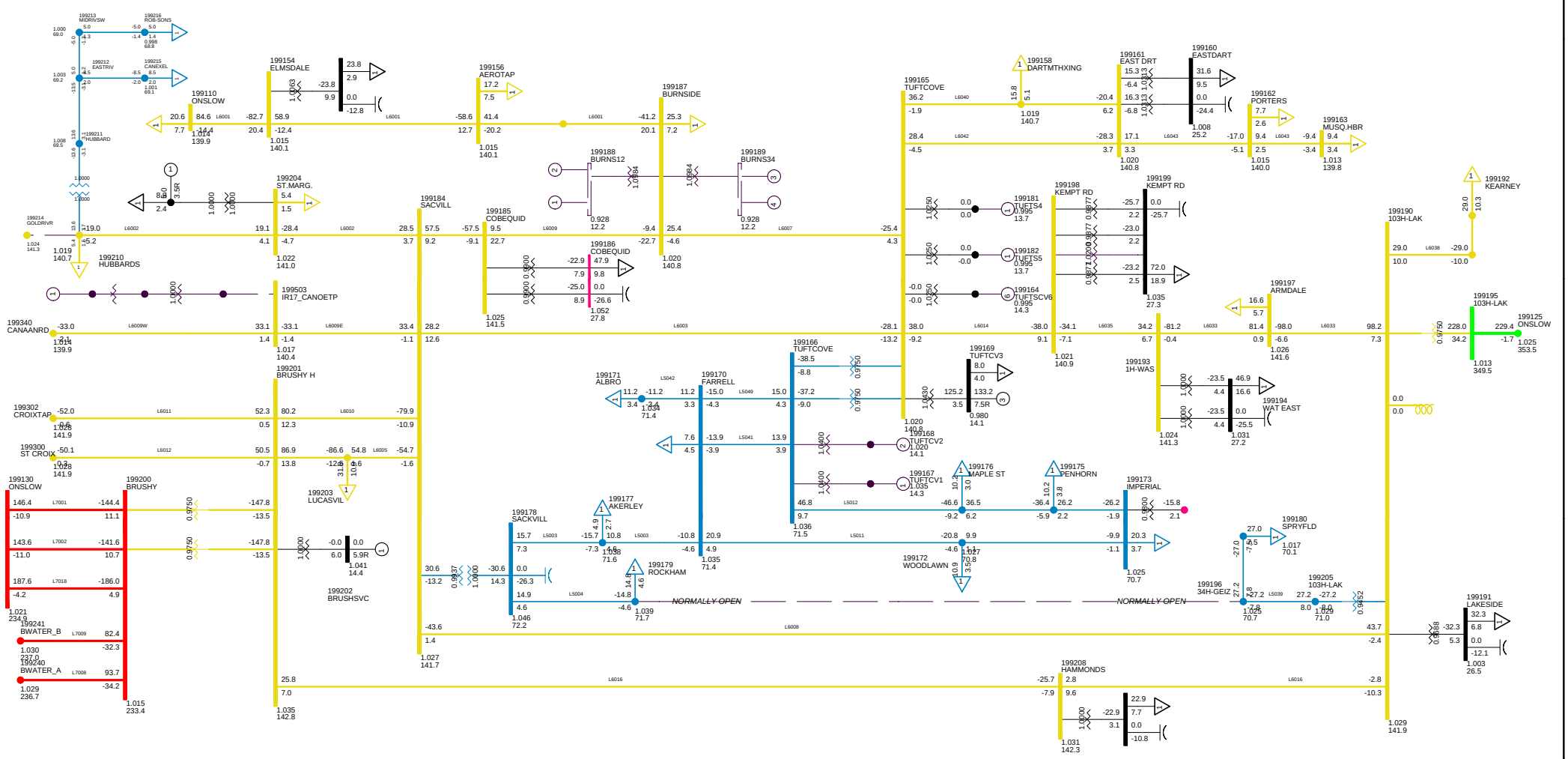

2010 SUMMER PEAK, NSLOAD=1700
NS-NB=+250; NB-NE=1000; CBX=780; ONI=1036 ONS=791
METRO ZONE TUE, DEC 09 2008 22:55

Bus - VOLTAGE (KV/PU)
Branch - MW/MVAR
Equipment - MW/MVAR
100.0%RATEA
1.050OV 0.950UV
KV: <=30.000 <=69.000 <=138.000 <=230.000 <=345.000 >345.000

Figure 12B

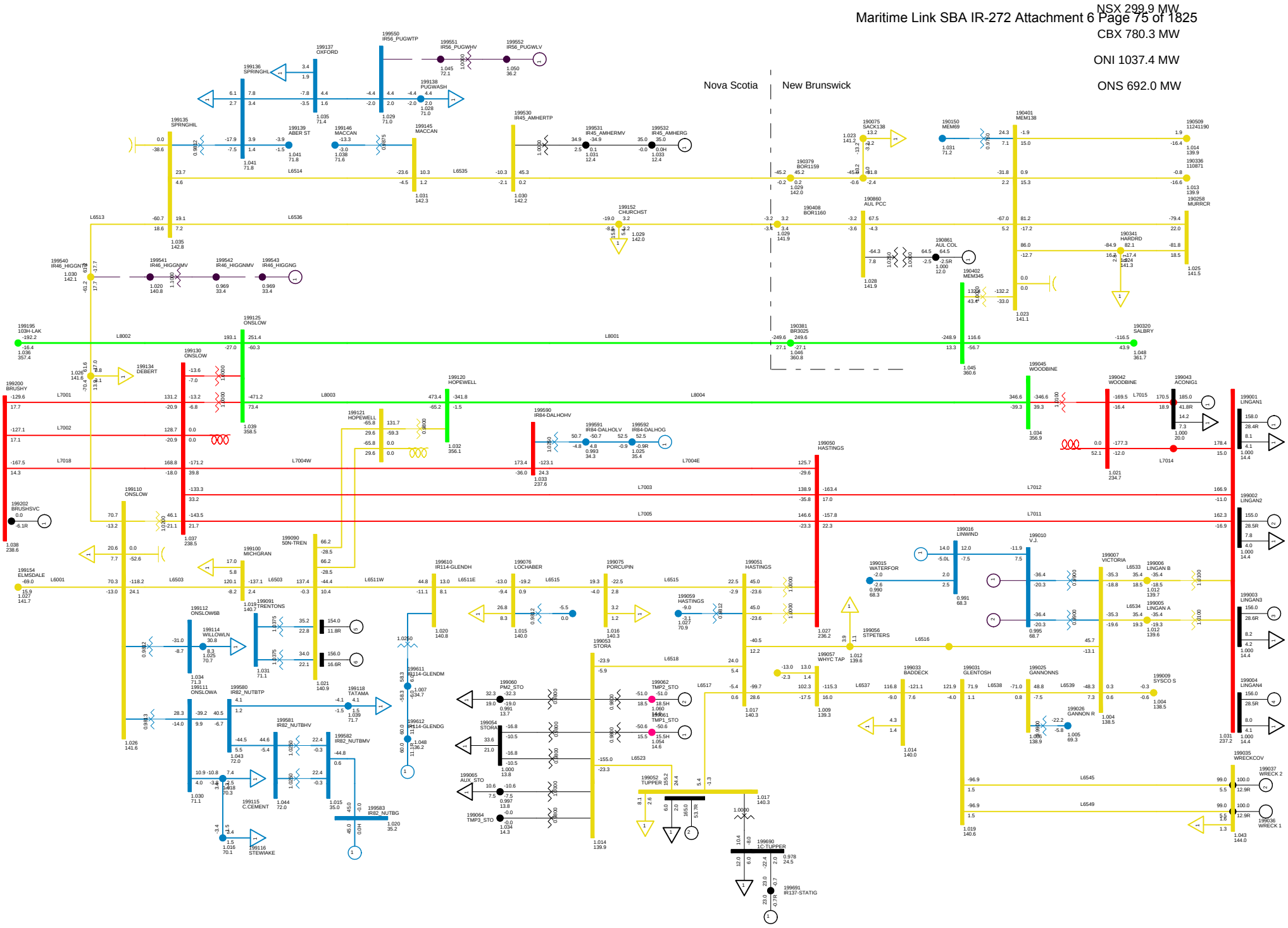

2010 SUMMER PEAK, NSLOAD=1700
NS-NB=+300; NB-NE=1000; CBX=780; ONI=1037 ONS=692
NORTHEASTERN NS TUE, DEC 09 2008 23:05

Total Wind Gen: 290.1 MW
Gross Lingan 625.0 MW
Gross Pt Aconi 185.0 MW
Gross Tupper 165.0 MW
Gross Trenton 310.0 MW
Gross Tuft's Cove 229.2 MW
Gross Wreck Cove 200.0 MW
Gross Gas Turbine 0.0 MW
Gross Small Hydro 42.9 MW
Net Stora Load 178.9 MW
Total BMPC Load 108.6 MW

Bus - VOLTAGE (KV/PU)
Branch - MW/MVAR
Equipment - MW/MVAR
110.0%RATEA
1.050OV 0.950UV
KV: <=25.000 <=69.000 <=138.000 <=230.000 <=345.000 >345.000

Figure 13A

Total Wind Gen: 290.1 MW | Gross Tupper 165.0 MW | Gross Wreck Cove 200.0 MW

Gross Lingan 625.0 MW | Gross Trenton 310.0 MW | Gross Gas Turbine 0.0 MW

Gross Pt Aconi 185.0 MW | Gross Tuft's Cove 229.2 MW | Gross Small Hydro 42.9 MW

Net Stora Load 178.9 MW | Total BMPC Load 108.6 MW

NSX 299.9 MW

CBX 780.3 MW

ONI 1037.4 MW

ONS 692.0 MW

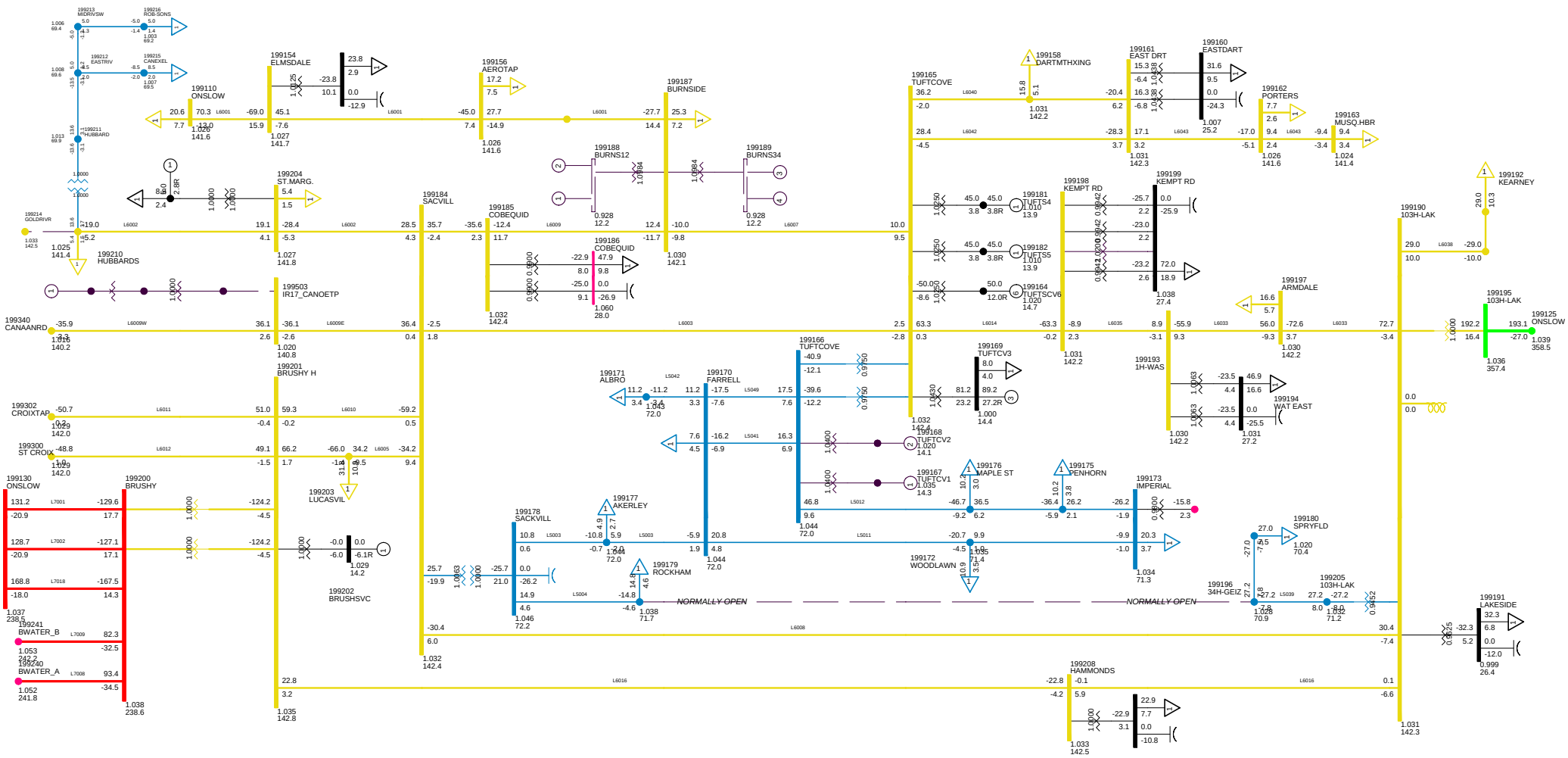

2010 SUMMER PEAK, NSLOAD=1700
NS-NB=+300; NB-NE=1000; CBX=780; ONI=1037 ONS=692
METRO ZONE TUE, DEC 09 2008 23:11

Figure 13B

NSX -0.9 MW

CBX 479.7 MW

ONI 582.1 MW

ONS 576.2 MW

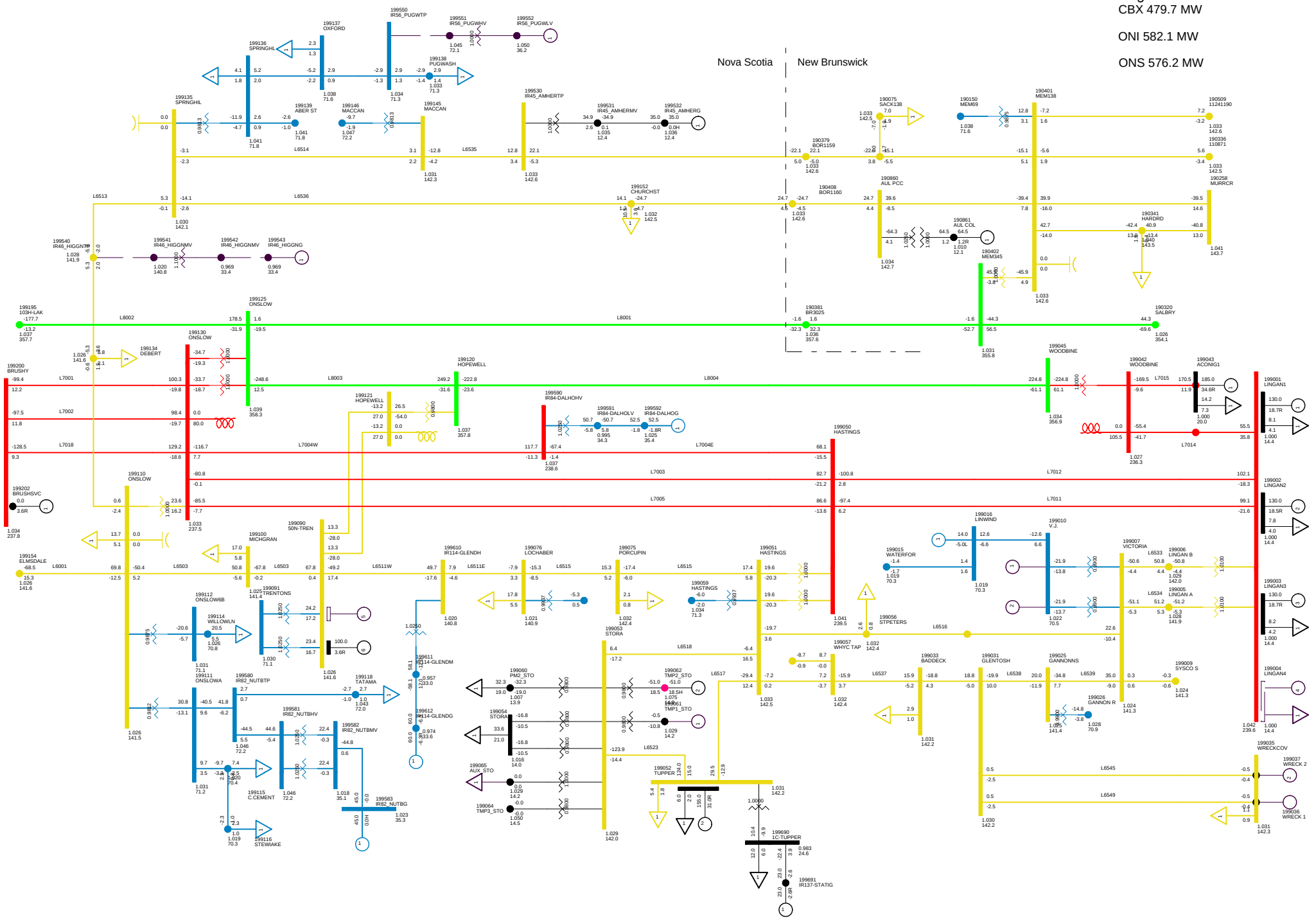

2010 LIGHT, NSLOAD=1150
NS-NB=0; NB-NE=0; CBX=469; ONI=482 ONS=475
NORTHEASTERN NS TUE, DEC 09 2008 21:41

Total Wind Gen: 290.1 MW
Gross Lingan 390.0 MW
Gross Pt Aconi 185.0 MW
Gross Tupper 155.0 MW
Gross Trenton 100.0 MW
Gross Tuft's Cove 0.0 MW
Gross Wreck Cove 0.0 MW
Gross Gas Turbine 0.0 MW
Gross Small Hydro 26.0 MW
Net Stora Load 117.4 MW
Total BMPC Load 42.5 MW

Bus - VOLTAGE (KV/PU)
Branch - MW/MVAR
Equipment - MW/MVAR
110.0%RATEA
1.050UV 0.950UV
KV: <=25.000 <=69.000 <=138.000 <=230.000 <=345.000 >345.000

Figure 14A

Total Wind Gen: 290.1 MW
Gross Tupper 155.0 MW
Gross Wreck Cove 0.0 MW
Gross Lingan 390.0 MW
Gross Trenton 100.0 MW
Gross Gas Turbine 0.0 MW
Gross Pt Aconi 185.0 MW
Gross Tuft's Cove 0.0 MW
Gross Small Hydro 26.0 MW
Net Stora Load 117.4 MW
Total BMPC Load 42.5 MW

NSX -0.9 MW
CBX 479.7 MW
ONI 582.1 MW
ONS 576.2 MW

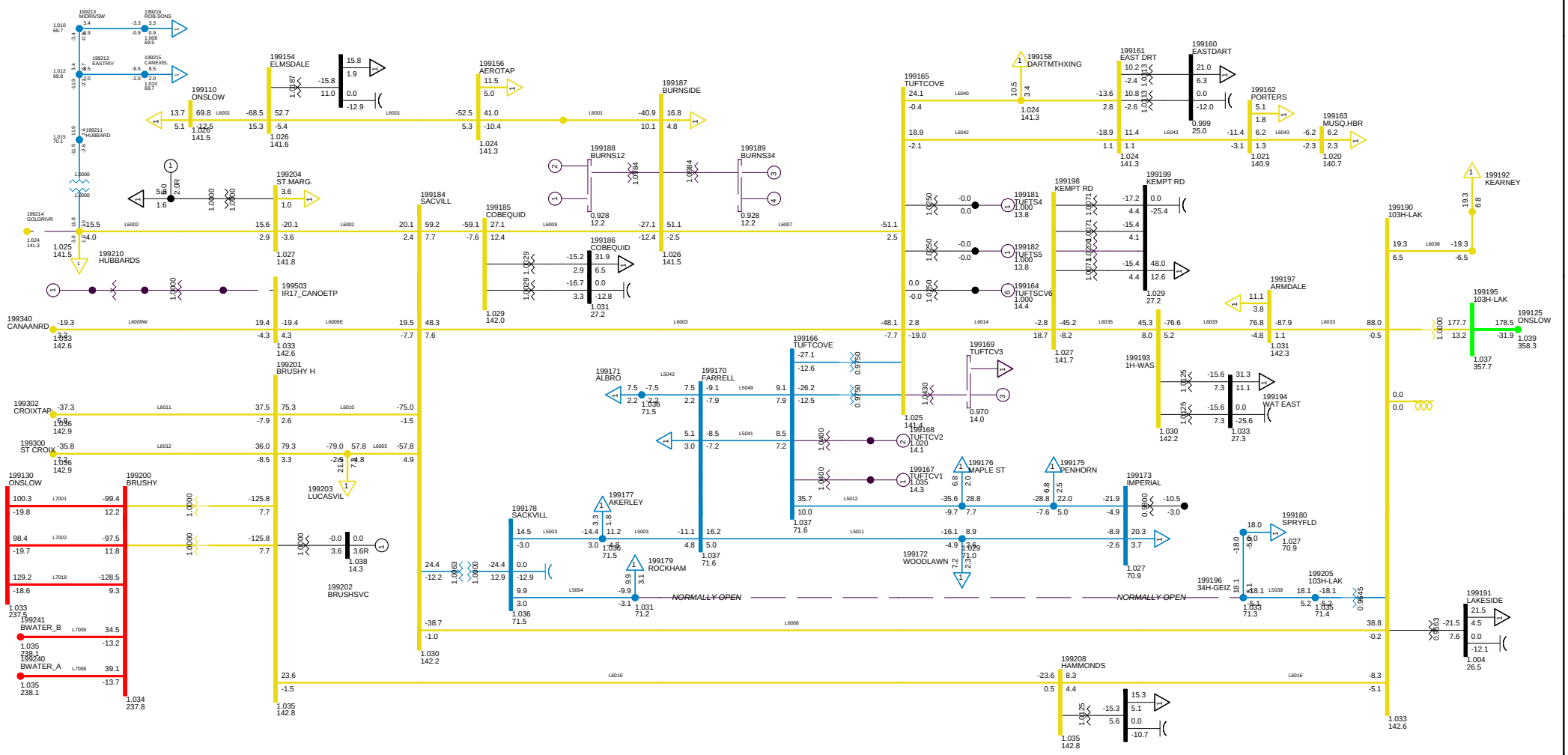

2010 LIGHT, NSLOAD=1150
NS-NB=0; NB-NE=0; CBX=469; ONI=482 ONS=475
METRO ZONE TUE, DEC 09 2008 21:44

Bus - VOLTAGE (KV/PU)
Branch - MW/MVAR
Equipment - MW/MVAR
100.0%RATEA
1.050OV 0.950UV
KV: <=30.000 <=69.000 <=138.000 <=230.000 <=345.000 >345.000

Figure 14B

NSX 0.7 MW
CBX 580.2 MW
ONI 583.9 MW
ONS 576.5 MW

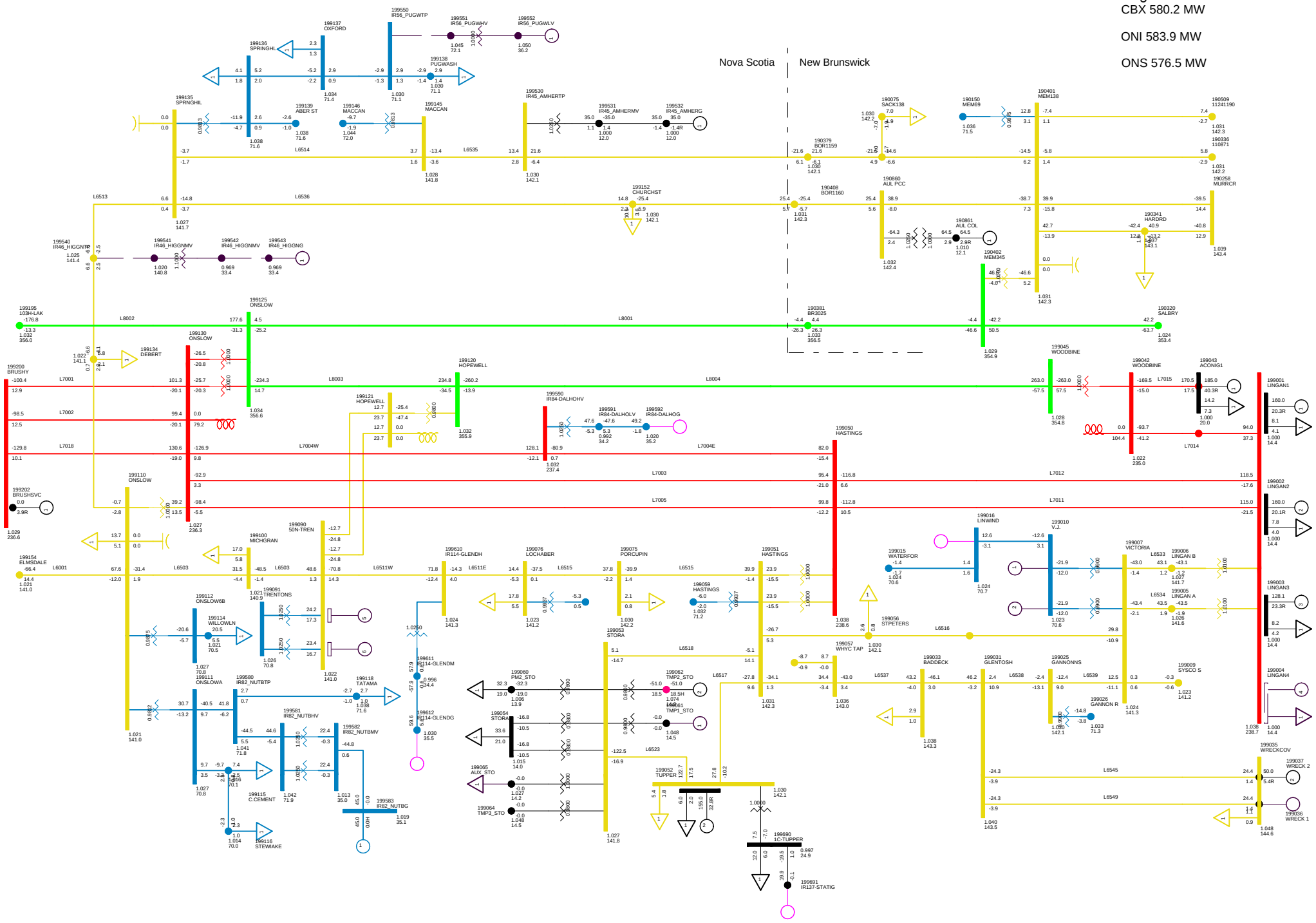

2010 LIGHT, NSLOAD=1150
NS-NB=0; NB-NE=0; CBX=580; ONI=583 ONS=576
NORTHEASTERN NS TUE, DEC 09 2008 22:20

Total Wind Gen: 140.6 MW
Gross Lingan 448.1 MW
Gross Pt Aconi 185.0 MW
Gross Tupper 155.0 MW
Gross Trenton 0.0 MW
Gross Tuft's Cove 0.0 MW
Gross Wreck Cove 50.0 MW
Gross Gas Turbine 0.0 MW
Gross Small Hydro 25.0 MW
Net Stora Load 117.4 MW
Total BMPC Load 42.5 MW

Bus - VOLTAGE (KV/PU)
Branch - MW/MVAR
Equipment - MW/MVAR
110.0%RATEA
1.050OV 0.950UV
KV: <=25.000 <=69.000 <=138.000 <=230.000 <=345.000 >345.000

Figure 15A

Total Wind Gen: 140.6 MW | Gross Tupper 155.0 MW | Gross Wreck Cove 50.0 MW

Gross Lingan 448.1 MW | Gross Trenton 0.0 MW | Gross Gas Turbine 0.0 MW

Gross Pt Aconi 185.0 MW | Gross Tuft's Cove 0.0 MW | Gross Small Hydro 25.0 MW

Net Stora Load 117.4 MW | Total BMPC Load 42.5 MW

NSX 0.7 MW

CBX 580.2 MW

ONI 583.9 MW

ONS 576.5 MW

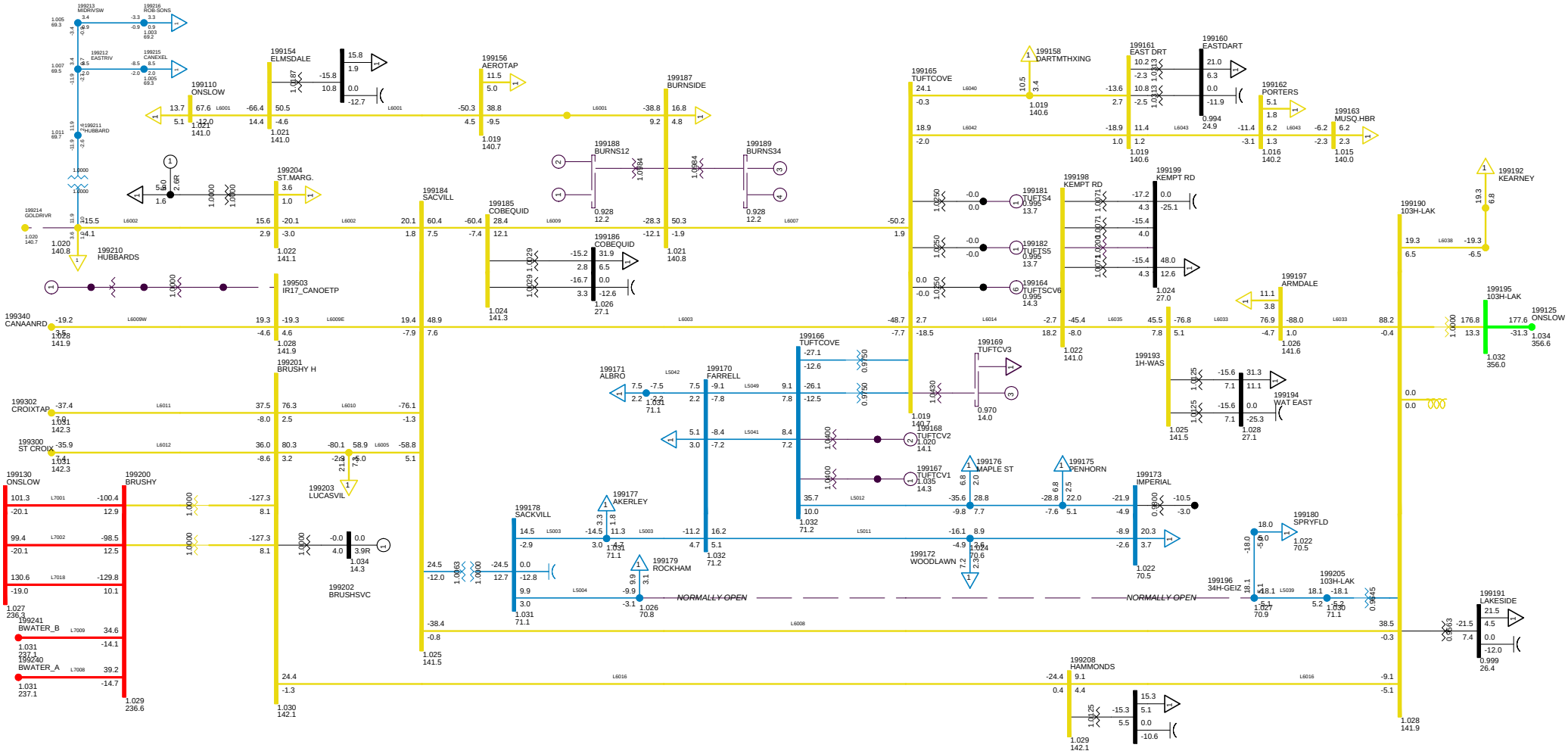

2010 LIGHT, NSLOAD=1150
NS-NB=0; NB-NE=0; CBX=580; ONI=583 ONS=576
METRO ZONE TUE, DEC 09 2008 22:23

Figure 15B

NSX -215.1 MW

CBX 543.8 MW

ONI 773.3 MW

ONS 864.5 MW

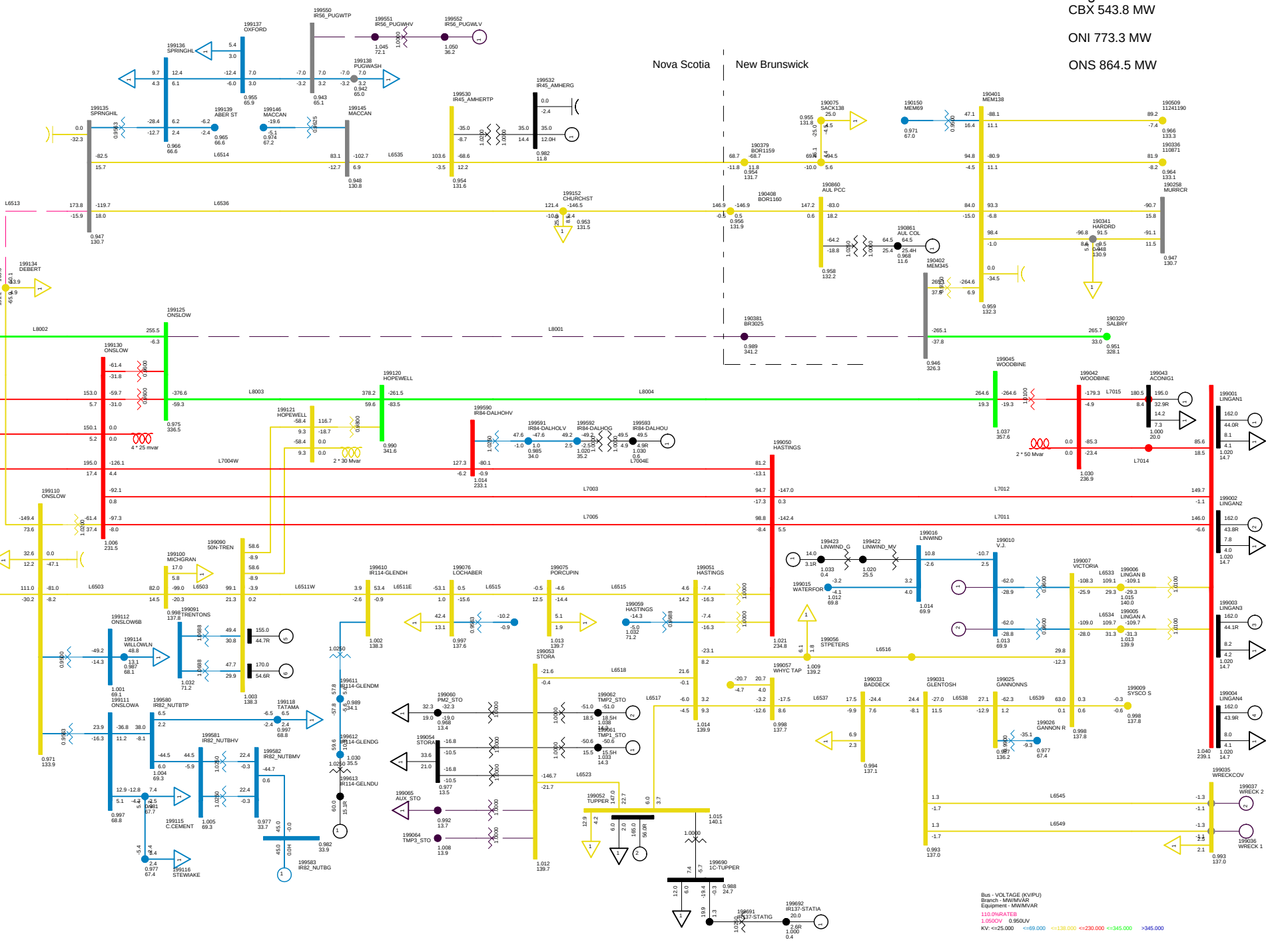

2013 WINTER PEAK NS IMPORT 200 MW
C04 LOSE L8001 NO SPS
NORTHEASTERN NS WED, DEC 10 2008 11:22

Total Wind Gen: 140.6 MW
Gross Lingan 648.0 MW
Gross Pt Aconi 195.0 MW

Gross Tupper 165.0 MW
Gross Trenton 325.0 MW
Gross Tuft's Cove 378.1 MW

Gross Wreck Cove 0.0 MW
Gross Gas Turbine 24.0 MW
Gross Small Hydro 182.4 MW

Net Stora Load 168.3 MW
Total BMPC Load 75.5 MW

Figure 16

NSX -200.9 MW

CBX 543.5 MW

ONI 772.7 MW

ONS 863.3 MW

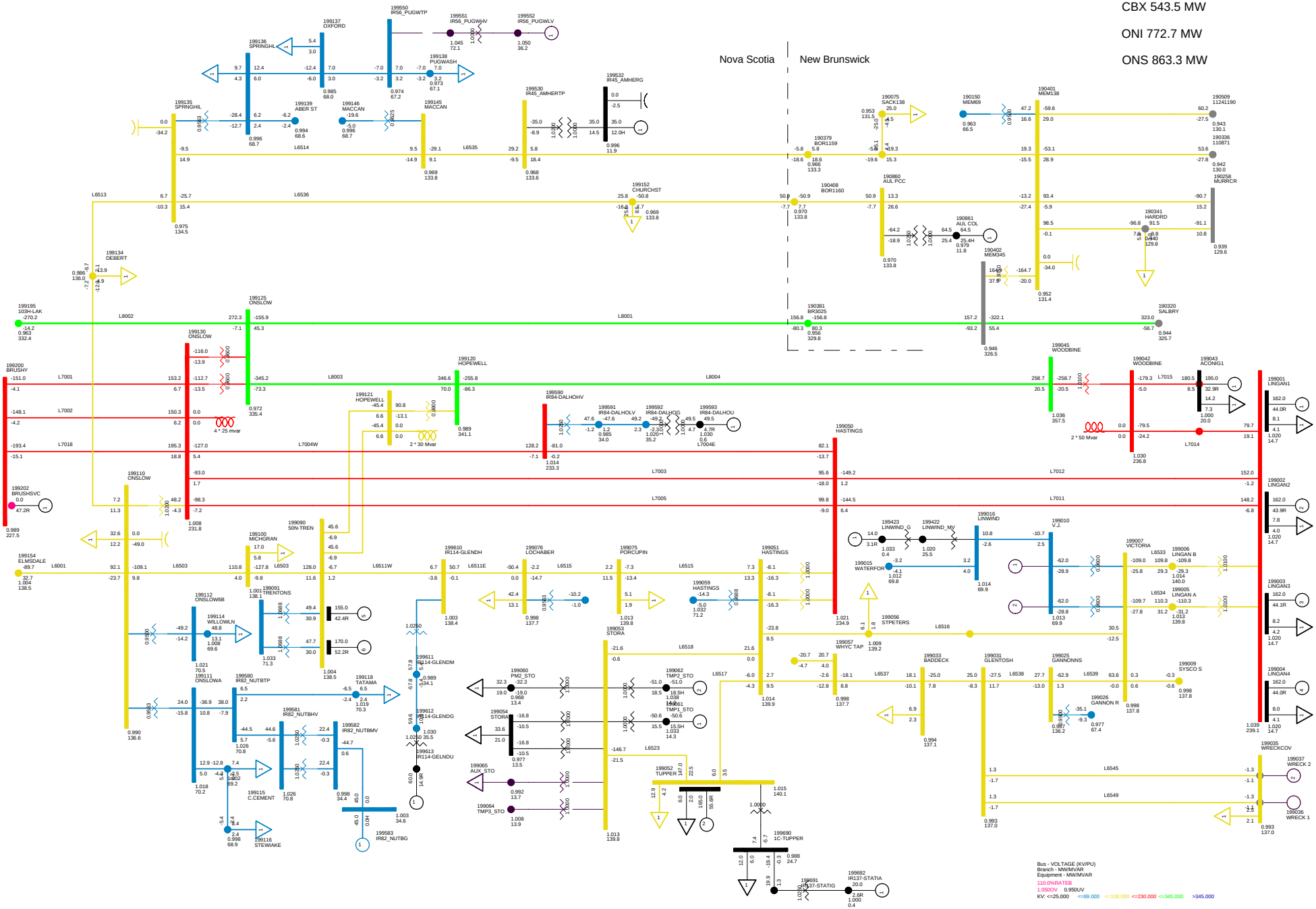

2013 WINTER PEAK NS IMPORT 200 MW
C64 FAULT ON BREAKER SALISBURY BREAKER SA3-4 TRIPS L3013 AND
NORTHEASTERN NS WED, DEC 10 2008 11:33

Total Wind Gen: 140.6 MW
Gross Lingan 648.0 MW
Gross Pt Aconi 195.0 MW

Gross Tupper 165.0 MW
Gross Trenton 325.0 MW
Gross Tuft's Cove 378.1 MW

Gross Wreck Cove 0.0 MW
Gross Gas Turbine 24.0 MW
Gross Small Hydro 182.4 MW

Net Stora Load 168.3 MW
Total BMPC Load 75.5 MW

Figure 17

Figure 18
Western Separation

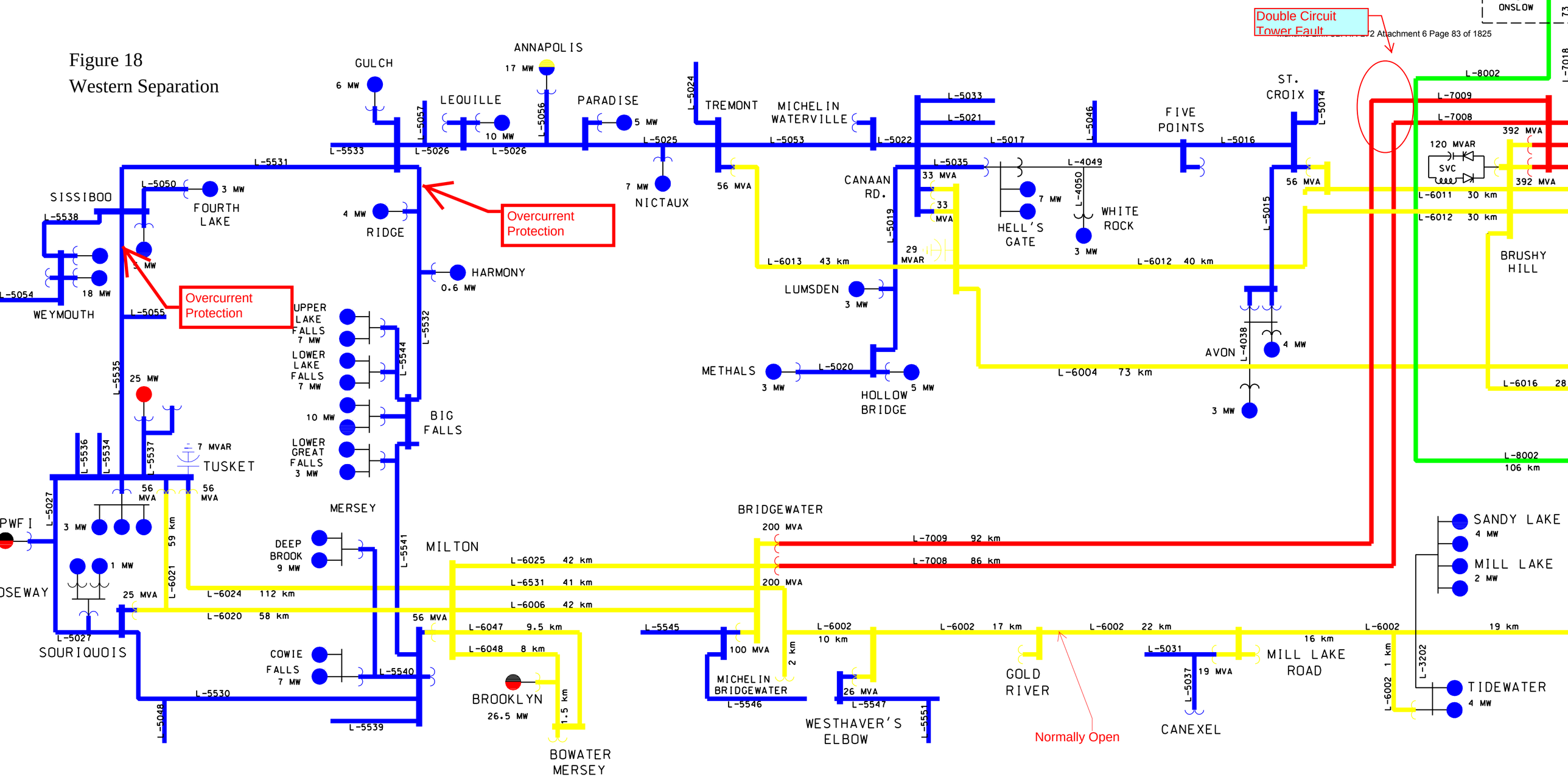

NSX 401.2 MW
CBX 790.1 MW
ONI 1012.1 MW
ONS 497.2 MW

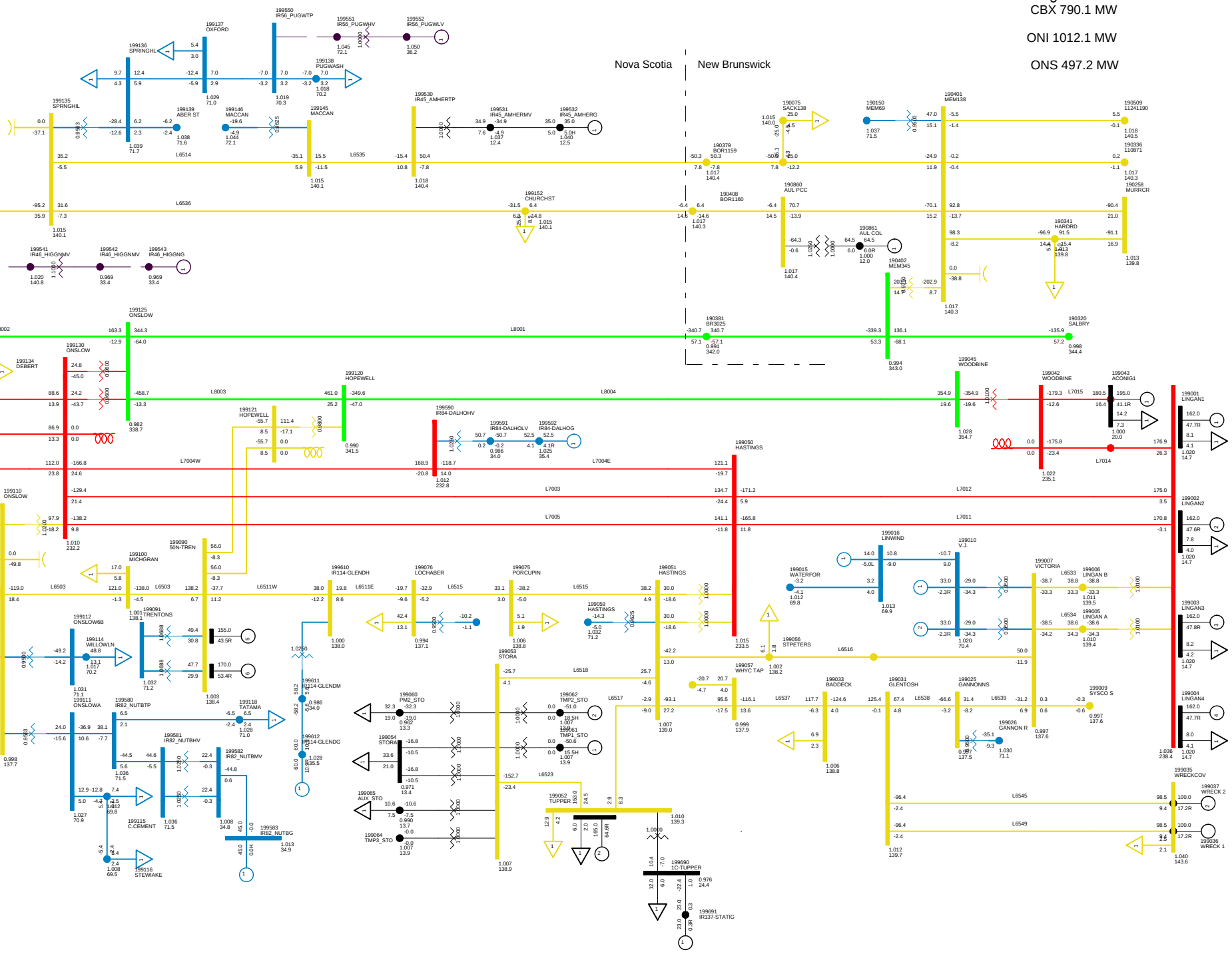

C40 DCT L7008 L7009
WEST SEPARATES AT GULCH AND SISSIBOO
NORTHEASTERN NS FRI, FEB 06 2009 16:23

Total Wind Gen: 259.5 MW
Gross Lingan 648.0 MW
Gross Pt Aconi 195.0 MW
Gross Tupper 165.0 MW
Gross Trenton 325.0 MW
Gross Tuft's Cove 455.2 MW
Gross Wreck Cove 200.0 MW
Gross Gas Turbine 186.0 MW
Gross Small Hydro 130.4 MW
Net Stora Load 178.4 MW
Total BMPC Load 0.0 MW

Bus - VOLTAGE (KV/PU)
Branch - MW/MVAR
Equipment - MW/MVAR
110.0%RATEB
1.050OV 0.950UV
KV: <=25.000 <=69.000 <=138.000 <=230.000 <=345.000 >345.000

Figure 19A

Total Wind Gen: 259.5 MW
Gross Tupper 165.0 MW
Gross Wreck Cove 200.0 MW
Gross Lingan 648.0 MW
Gross Trenton 325.0 MW
Gross Gas Turbine 186.0 MW
Gross Pt Aconi 195.0 MW
Gross Tuft's Cove 455.2 MW
Gross Small Hydro 130.4 MW
Net Stora Load 178.4 MW
Total BMPC Load 0.0 MW

NSX 401.2 MW
CBX 790.1 MW
ONI 1012.1 MW
ONS 497.2 MW

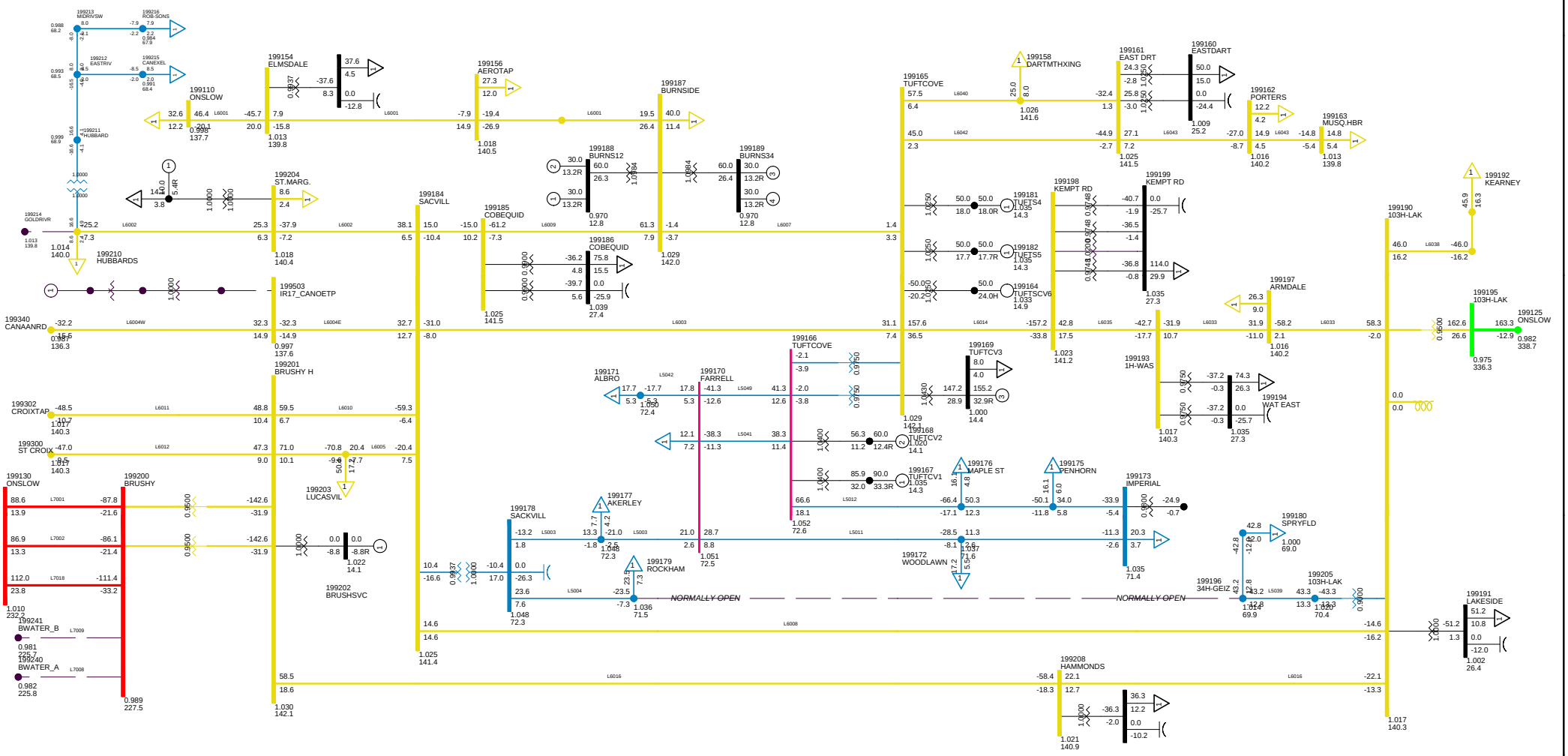

C40 DCT L7008 L7009
WEST SEPARATES AT GULCH AND SISSIBOO
METRO ZONE FRI, FEB 06 2009 16:26

Bus - VOLTAGE (KV/PU)
Branch - MW/MVAR
Equipment - MW/MVAR
100.0%RATEB
1.050OV 0.950UV
KV: <=30.000 <=69.000 <=138.000 <=230.000 <=345.000 >345.000

Figure19B

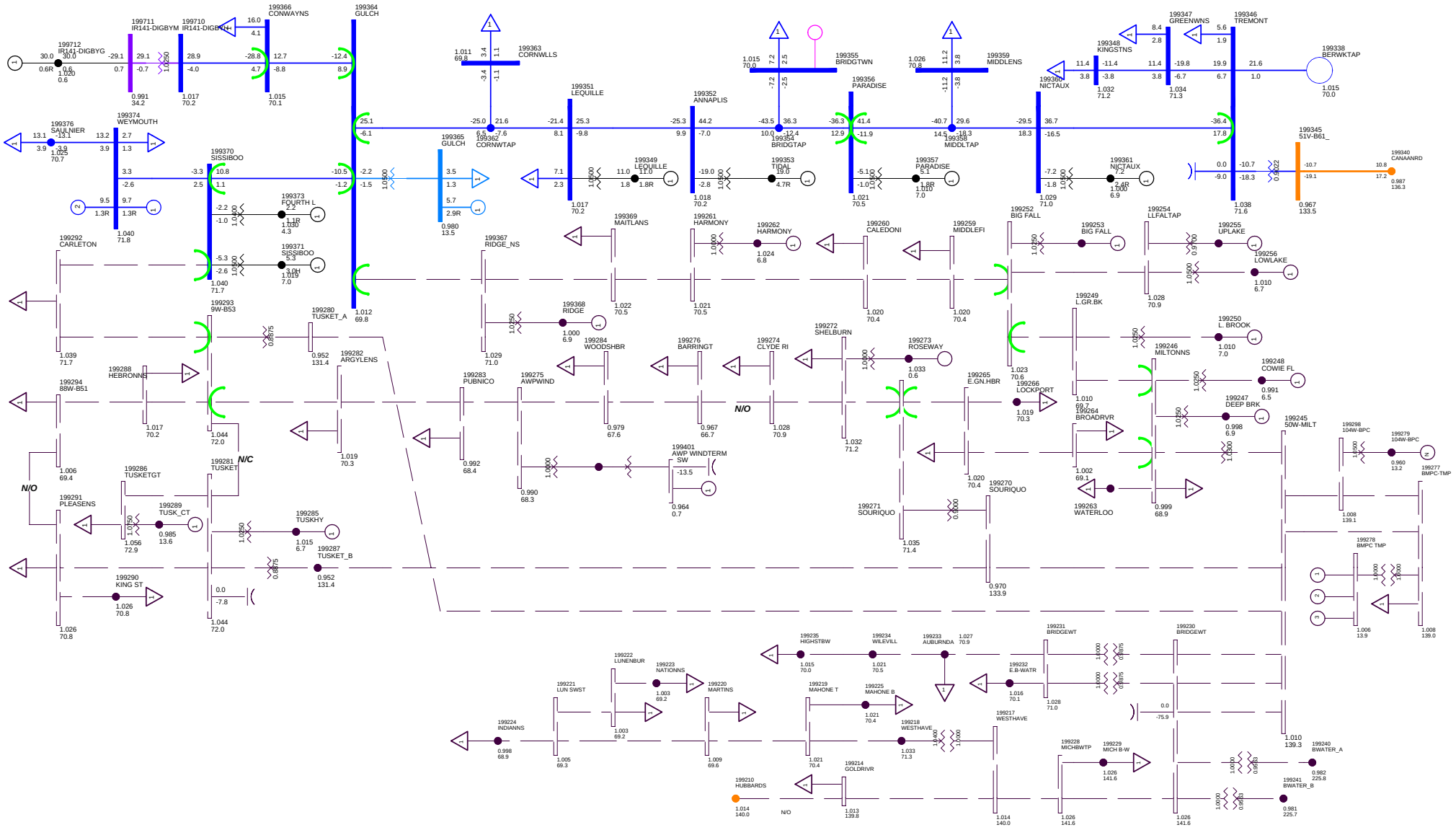

C40 DCT L7008 L7009
WEST SEPARATES AT GULCH AND SISSIBOO
WESTERN NS FRI, FEB 06 2009 16:27

Bus - VOLTAGE (KV/PU)
Branch - MW/MVAR
Equipment - MW/MVAR
100.0%RATEB
1.050OV 0.950UV
KV: <=12.000 <=25.000 <=34.500 <=69.000 <=138.000 <=230.000 >230.000

Circuit Breaker Position

Figure 19C

Total Wind Gen: 290.1 MW
Gross Tupper 165.0 MW
Gross Wreck Cove 200.0 MW
Gross Lingan 648.0 MW
Gross Trenton 325.0 MW
Gross Gas Turbine 24.0 MW
Gross Pt Aconi 195.0 MW
Gross Tuft's Cove 153.7 MW
Gross Small Hydro 182.4 MW
Net Stora Load 178.4 MW
Total BMPC Load 108.5 MW

NSX -156.8 MW
CBX 725.1 MW
ONI 949.5 MW
ONS 995.9 MW

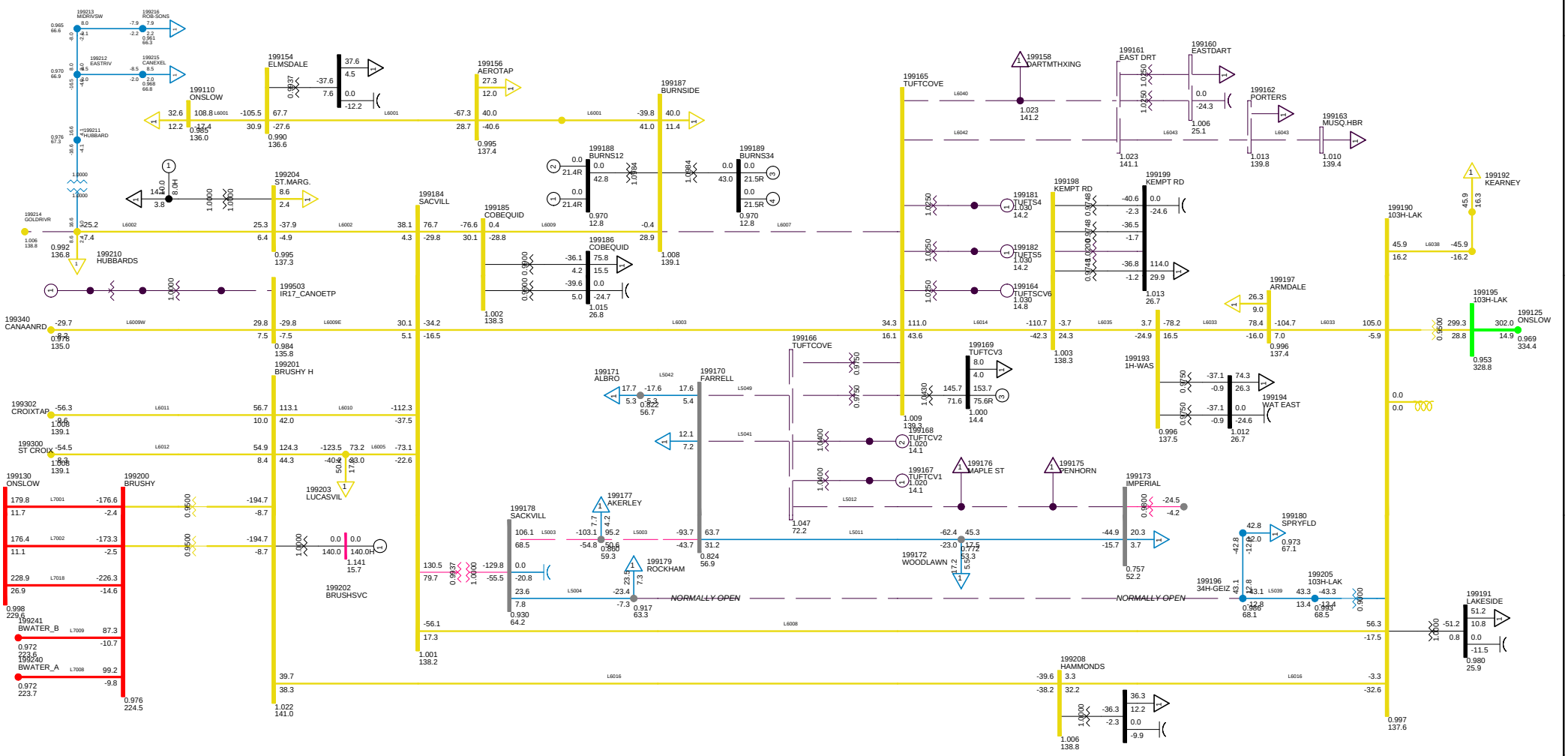

2013WINTER PEAK WITH DSM - NS-NB=0
C45 BBU ON 91H-523
METRO ZONE WED, DEC 10 2008 9:34

Bus - VOLTAGE (KV/PU)
Branch - MW/MVAR
Equipment - MW/MVAR
100.0%RATE8
1.050OV 0.950UV
KV: <=30.000 <=69.000 <=138.000 <=230.000 <=345.000 >345.000

Figure 20

Total Wind Gen: 290.1 MW | Gross Tupper 165.0 MW | Gross Wreck Cove 200.0 MW

Gross Lingan 648.0 MW | Gross Trenton 325.0 MW | Gross Gas Turbine 210.0 MW

Gross Pt Aconi 195.0 MW | Gross Tuft's Cove 155.2 MW | Gross Small Hydro 182.4 MW

Net Stora Load 178.4 MW | Total BMPC Load 108.5 MW

NSX 30.8 MW

CBX 789.3 MW

ONI 1010.7 MW

ONS 869.2 MW

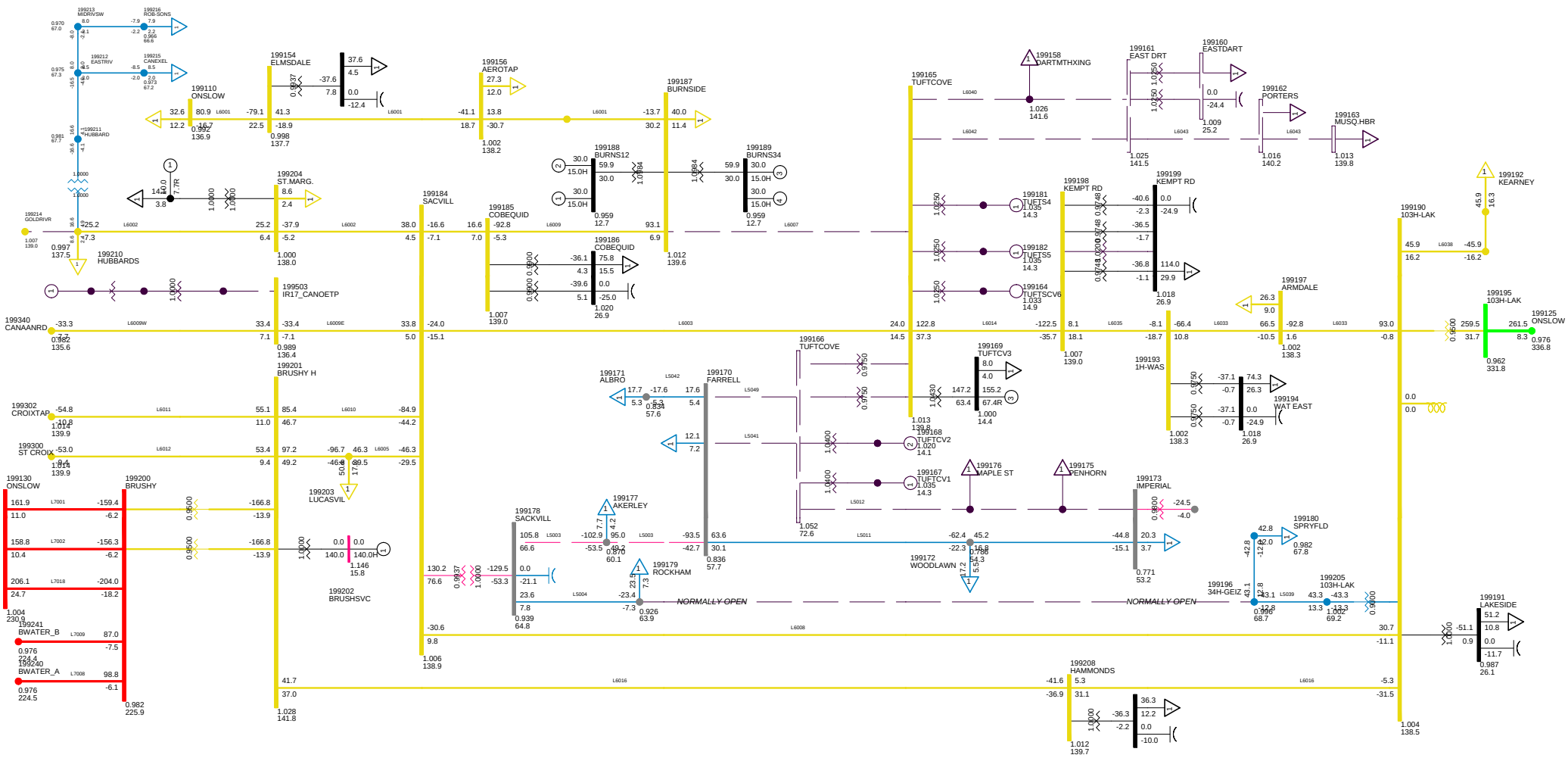

2013 WINTER PEAK NS EXPORT 200
C45 BBU ON 91H-523
METRO ZONE WED, DEC 10 2008 9:53

Bus - VOLTAGE (KV/PU)
Branch - MW/MVAR
Equipment - MW/MVAR
100.0%RATE8
1.050OV 0.950UV
KV: <=30.000 <=69.000 <=138.000 <=230.000 <=345.000 >345.000

Figure 21

Total Wind Gen: 290.1 MW
Gross Tupper 165.0 MW
Gross Wreck Cove 0.0 MW
Gross Lingan 625.0 MW
Gross Trenton 0.0 MW
Gross Gas Turbine 0.0 MW
Gross Pt Aconi 185.0 MW
Gross Tuft's Cove 158.6 MW
Gross Small Hydro 42.9 MW
Net Stora Load 178.9 MW
Total BMPC Load 108.5 MW

NSX -163.8 MW
CBX 592.5 MW
ONI 560.7 MW
ONS 679.9 MW

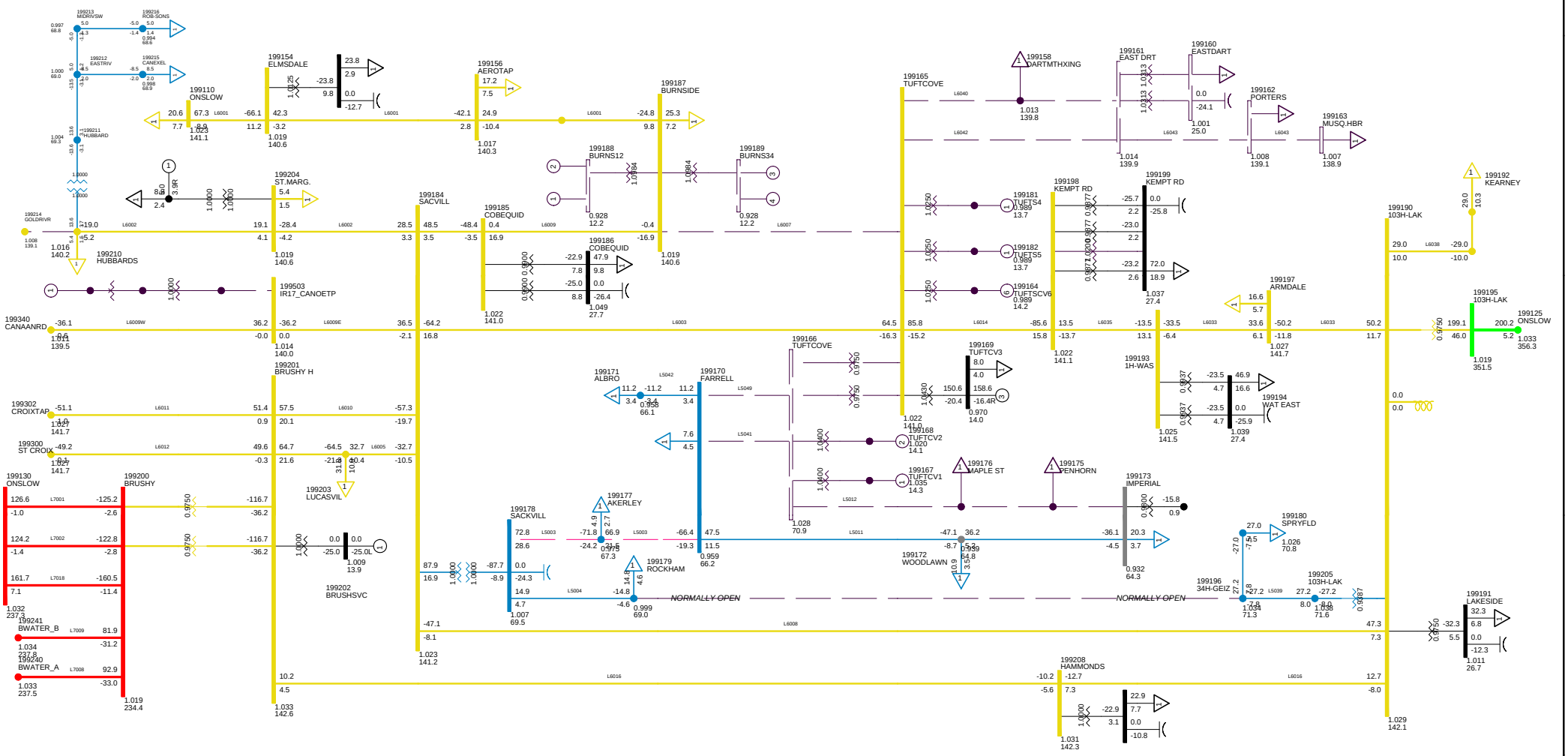

2013 SUMMER PEAK NS IMPORT 250 MW
C45 BBU ON 91H-523
METRO ZONE TUE, DEC 09 2008 22:42

Bus - VOLTAGE (KV/PU)
Branch - MW/MVAR
Equipment - MW/MVAR
100.0%RATEA
1.050OV 0.950UV
KV: <=30.000 <=69.000 <=138.000 <=230.000 <=345.000 >345.000

Figure 22

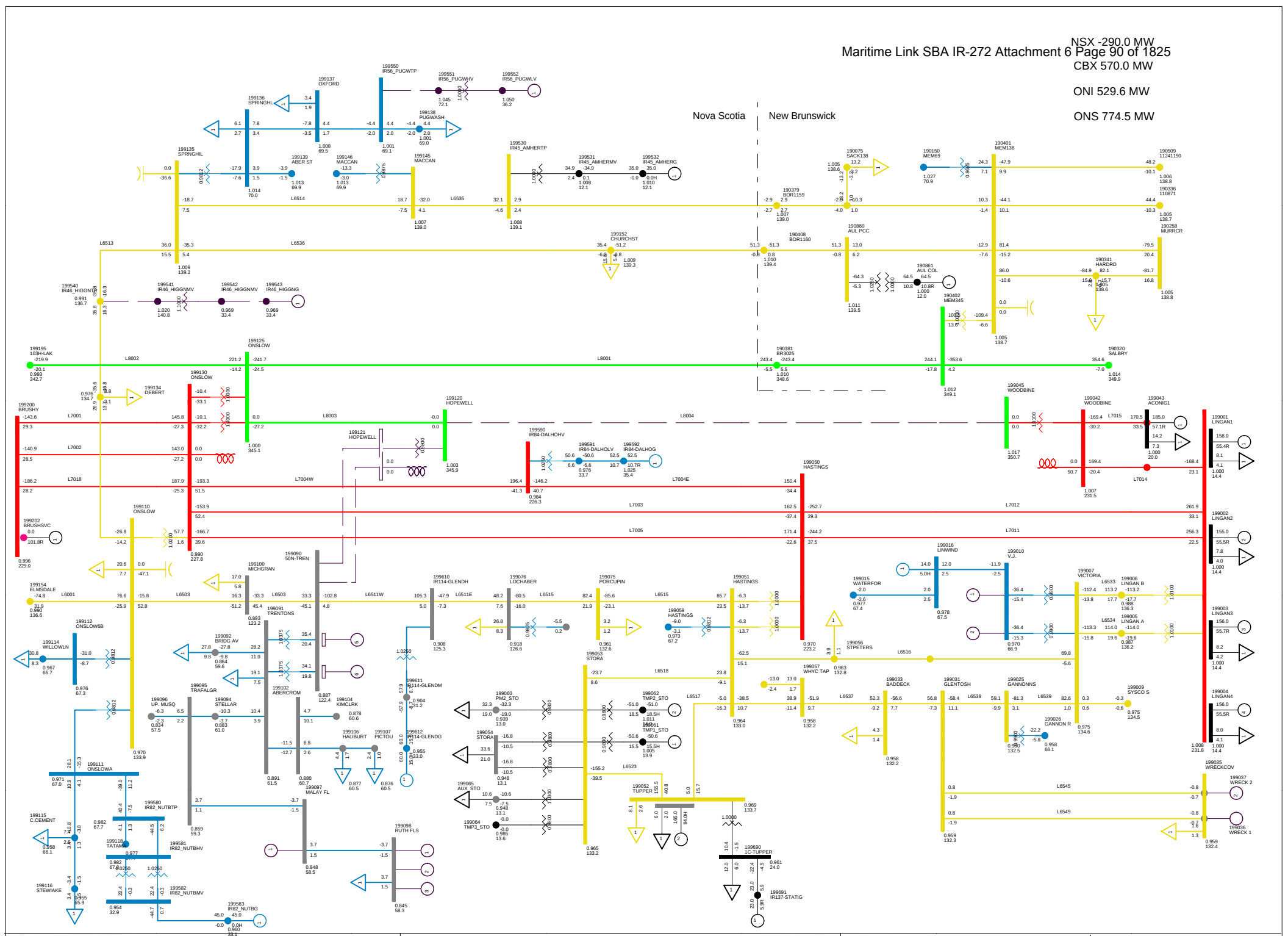

2010 SUMMER PEAK, NSLOAD=1700
NS-NB=-250;Lose Both llines from Trenton to Hopewell
NORTHEASTERN NS TUE, DEC 30 2008 20:28

Total Wind Gen: 290.1 MW | Gross Tupper 165.0 MW | Gross Wreck Cove 0.0 MW | Net Stora Load 179.0 MW
Gross Lingan 625.0 MW | Gross Trenton 0.0 MW | Gross Gas Turbine 0.0 MW | Total BMPC Load 108.5 MW
Gross Pt Aconi 185.0 MW | Gross Tuft's Cove 151.2 MW | Gross Small Hydro 42.9 MW

Bus - VOLTAGE (KV/PU)
Branch - MW/MVAR
Equipment - MW/MVAR
110.0%RATEA
1.050OV 0.950UV
KV: <=25.000 <=69.000 <=138.000 <=230.000 <=345.000 >345.000

Figure 23

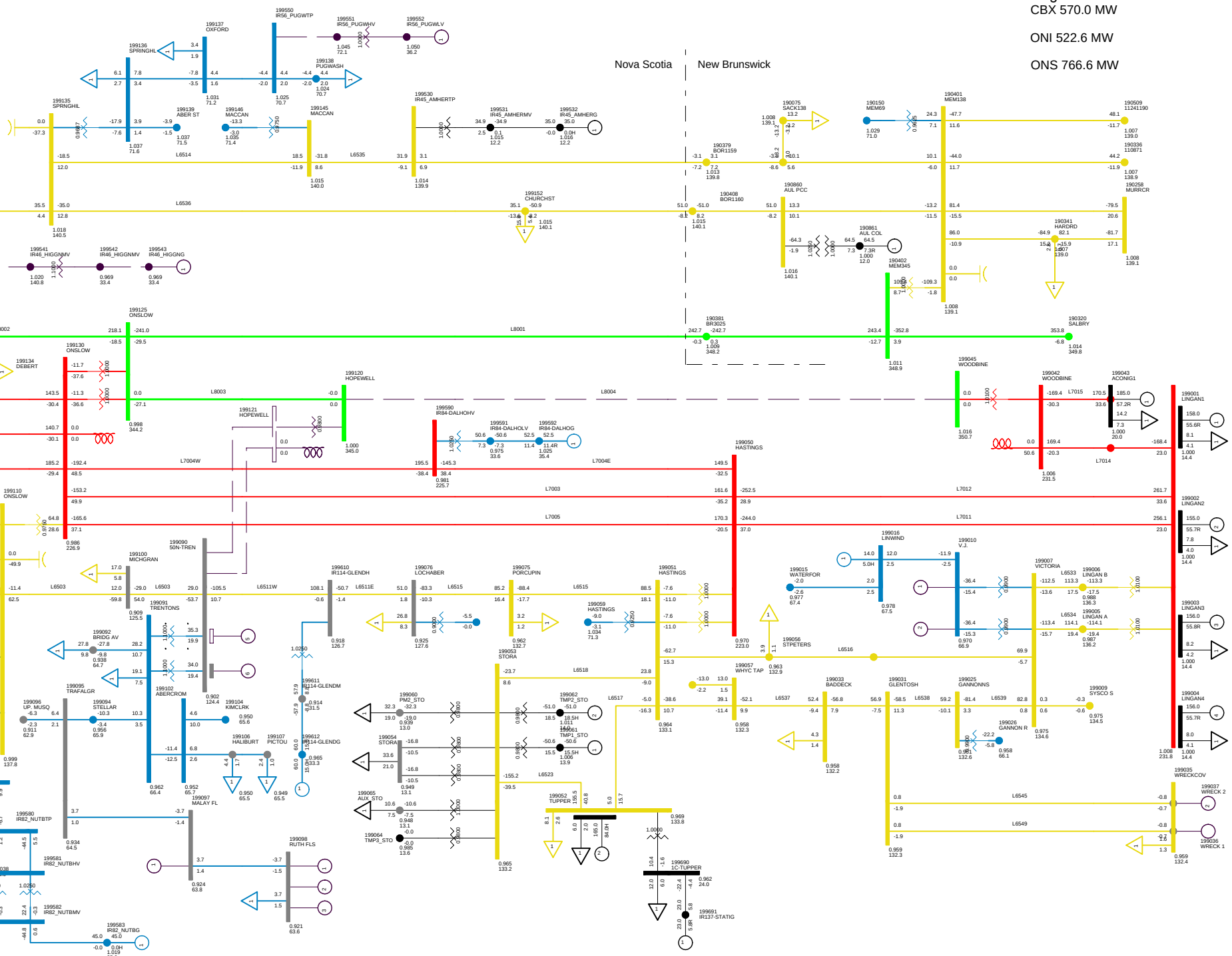

BREAKER FAILRE AT HOPEWELL 138KV
NO UNITS AT TRENTON tap changers
NORTHEASTERN NS FRI, FEB 06 2009 17:19

Total Wind Gen: 290.1 MW | Gross Tupper 165.0 MW | Gross Wreck Cove 0.0 MW | Net Stora Load 179.0 MW
Gross Lingan 625.0 MW | Gross Trenton 0.0 MW | Gross Gas Turbine 0.0 MW | Total BMPC Load 108.5 MW
Gross Pt Aconi 185.0 MW | Gross Tuft's Cove 158.6 MW | Gross Small Hydro 42.9 MW

Bus - VOLTAGE (KV/PU)
Branch - MW/MVAR
Equipment - MW/MVAR
110.0%RATEA
1.050OV 0.950UV
KV: <=25.000 <=69.000 <=138.000 <=230.000 <=345.000 >345.000

Figure 24

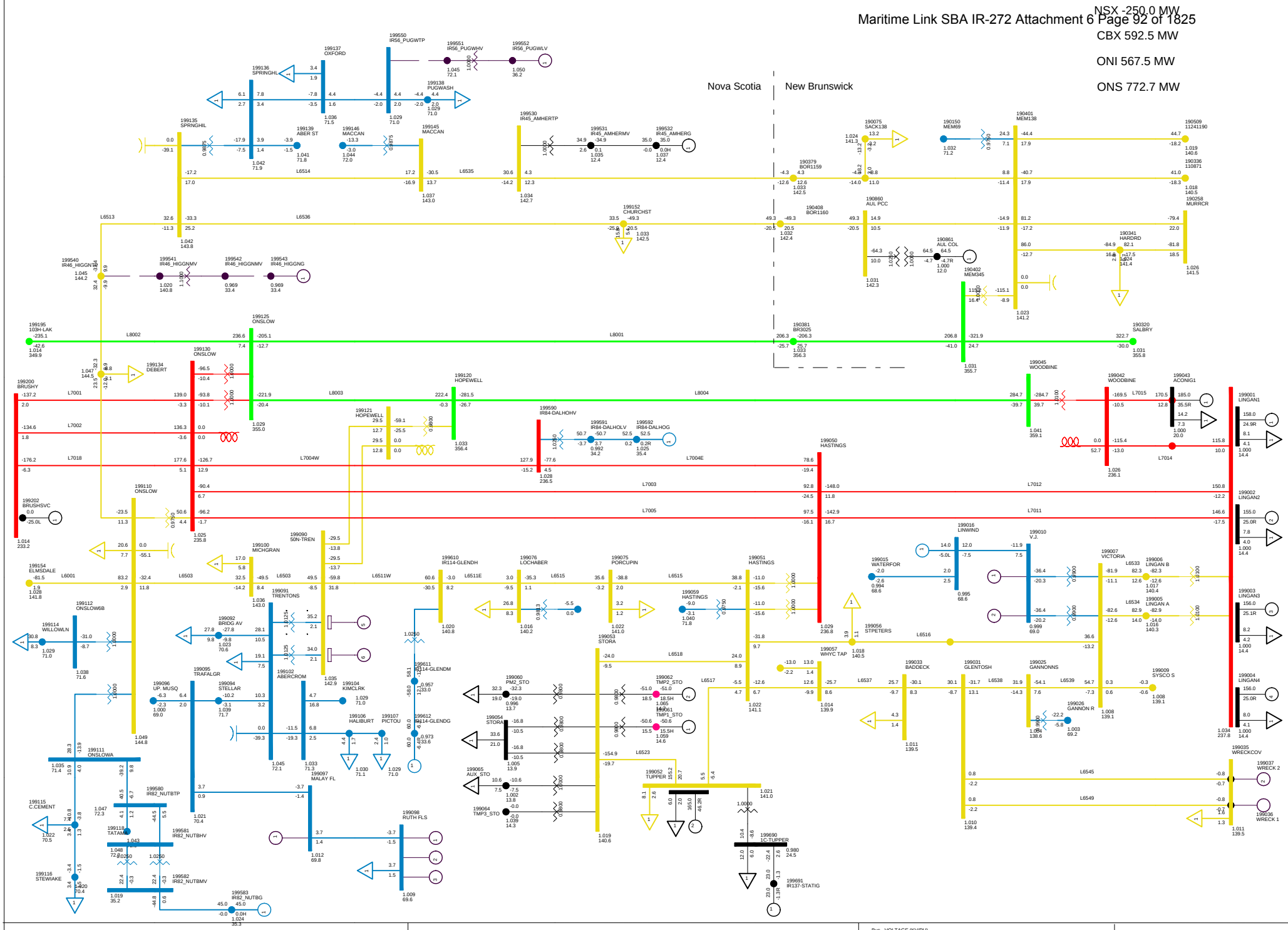

2010 SUMMER PEAK, NSLOAD=1700
ADD 36 MVAR CAPACITOR TO TRENTON 69KV
C50 with 36 Mvar cap at Trenton SAT, JAN 03 2009 16:22

Total Wind Gen: 290.1 MW | Gross Tupper 165.0 MW | Gross Wreck Cove 0.0 MW | Net Stora Load 178.9 MW
Gross Lingan 625.0 MW | Gross Trenton 0.0 MW | Gross Gas Turbine 0.0 MW | Total BMPC Load 108.6 MW
Gross Pt Aconi 185.0 MW | Gross Tuft's Cove 151.2 MW | Gross Small Hydro 42.9 MW

Bus - VOLTAGE (KV/PU)
Branch - MW/MVAR
Equipment - MW/MVAR
110.0%RATEA
1.050OV 0.950UV
KV: <=25.000 <=69.000 <=138.000 <=230.000 <=345.000 >345.000

Figure 25

NSX -286.9 MW

CBX 570.6 MW

ONI 531.9 MW

ONS 773.9 MW

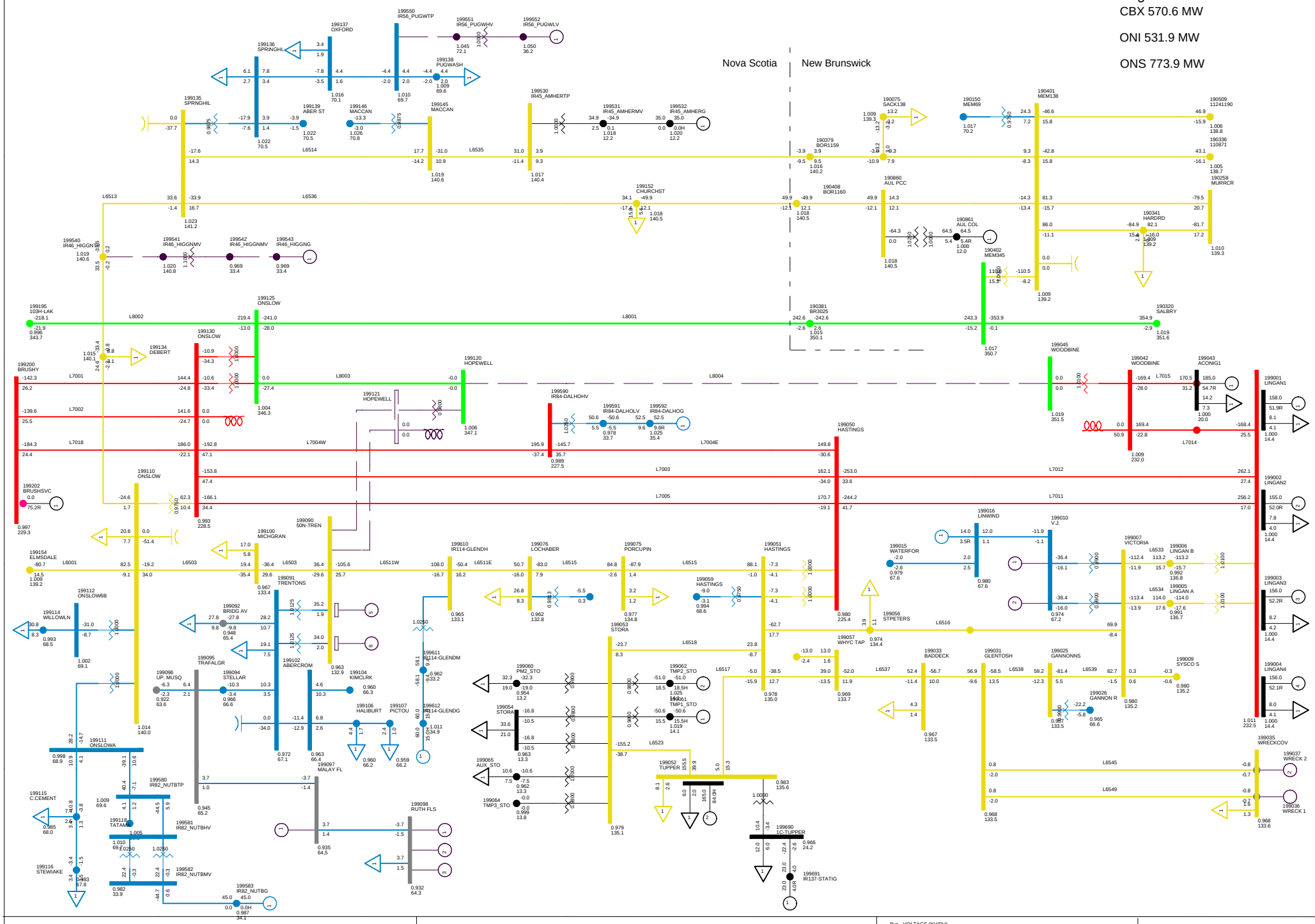

2010 SUMMER PEAK, NSLOAD=1700
ADD 36 MVAR CAPACITOR TO TRENTON 69KV
C50 with 36 Mvar cap at Trenton SAT, JAN 03 2009 16:25

Total Wind Gen: 290.1 MW | Gross Tupper 165.0 MW | Gross Wreck Cove 0.0 MW | Net Stora Load 179.0 MW
Gross Lingan 625.0 MW | Gross Trenton 0.0 MW | Gross Gas Turbine 0.0 MW | Total BMPC Load 108.5 MW
Gross Pt Aconi 185.0 MW | Gross Tuft's Cove 151.2 MW | Gross Small Hydro 42.9 MW

Bus - VOLTAGE (KV/PU)
Branch - MW/MVAR
Equipment - MW/MVAR
110.0%RATEA
1.050OV 0.950UV
KV: <=25.000 <=69.000 <=138.000 <=230.000 <=345.000 >345.000

Figure 26

NSX -290.9 MW

CBX 569.7 MW

ONI 521.8 MW

ONS 767.4 MW

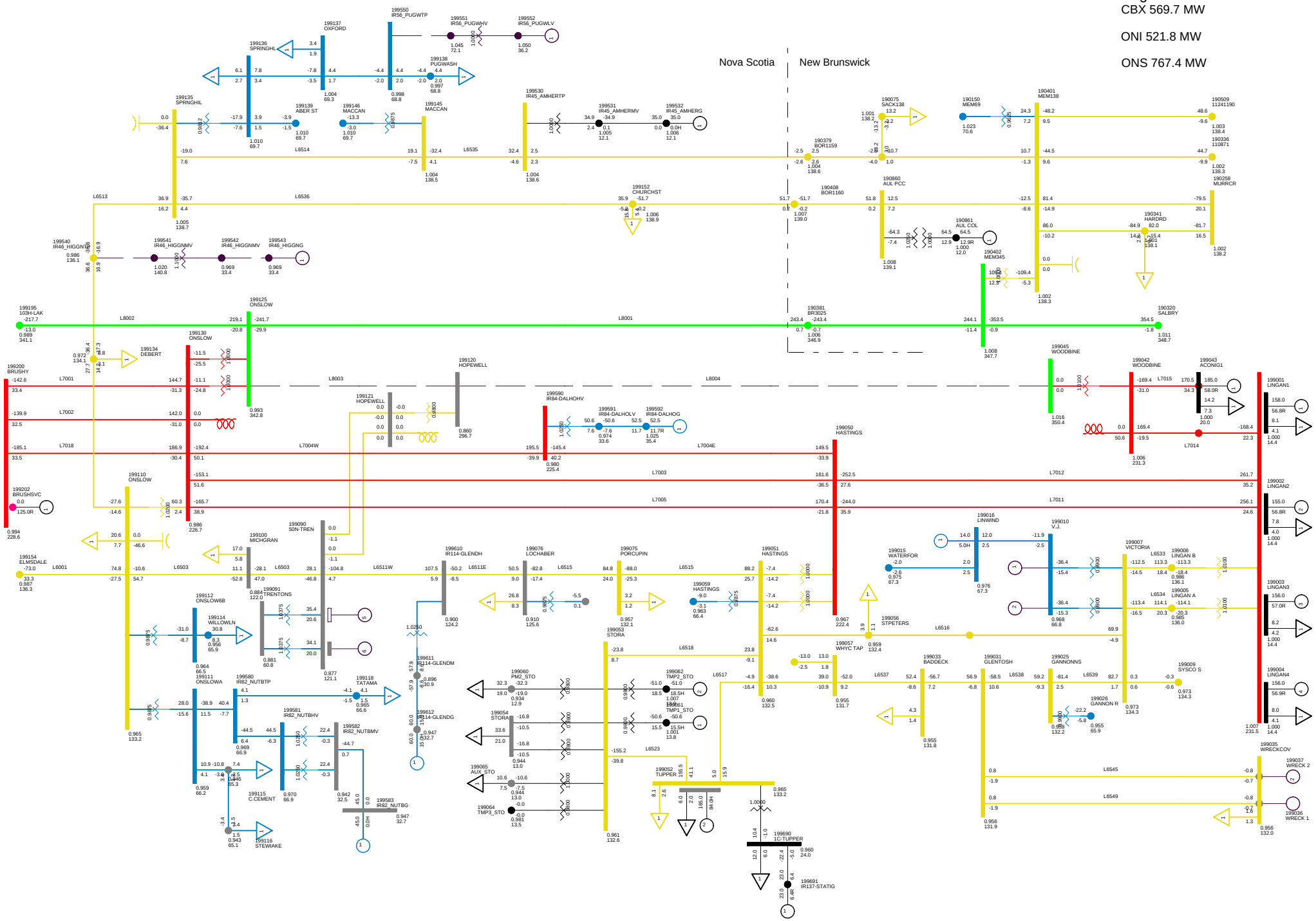

2013 SUMMER PEAK NS IMPORT 250 MW
C58 BBU 79N-810 NO SPS
NORTHEASTERN NS TUE, DEC 09 2008 22:45

Total Wind Gen: 290.1 MW | Gross Tupper 165.0 MW | Gross Wreck Cove 0.0 MW | Net Stora Load 179.0 MW
Gross Lingan 625.0 MW | Gross Trenton 0.0 MW | Gross Gas Turbine 0.0 MW | Total BMPC Load 108.5 MW
Gross Pt Aconi 185.0 MW | Gross Tuft's Cove 158.6 MW | Gross Small Hydro 42.9 MW

Bus - VOLTAGE (KV/PU)
Branch - MW/MVAR
Equipment - MW/MVAR
110.0%RATE A
1.050UV 0.950UV
KV: <=25.000 <=69.000 <=138.000 <=230.000 <=345.000 >345.000

Figure 27

NSX -309.7 MW

CBX 567.9 MW

ONI 504.1 MW

ONS 768.3 MW

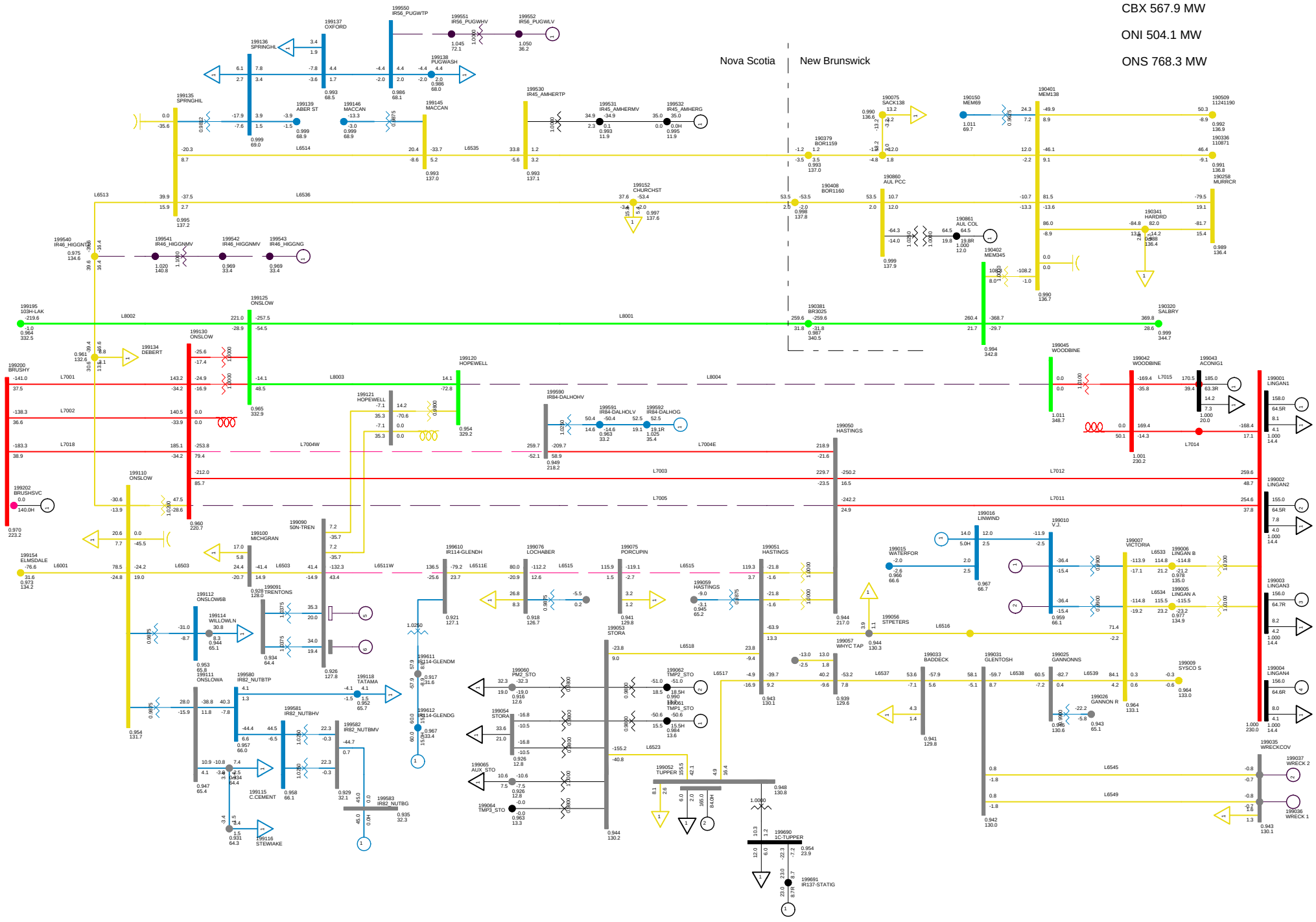

2013 SUMMER PEAK NS IMPORT 250 MW
C61 DCT ON STRAIT CROSSING LOSE L8004-L7005 NO SPS
NORTHEASTERN NS TUE, DEC 09 2008 22:46

Total Wind Gen: 290.1 MW | Gross Tupper 165.0 MW | Gross Wreck Cove 0.0 MW | Net Stora Load 179.0 MW
Gross Lingan 625.0 MW | Gross Trenton 0.0 MW | Gross Gas Turbine 0.0 MW | Total BMPC Load 108.4 MW
Gross Pt Aconi 185.0 MW | Gross Tuft's Cove 158.6 MW | Gross Small Hydro 42.9 MW

Bus - VOLTAGE (KV/PU)
Branch - MW/MVAR
Equipment - MW/MVAR
110.0%RATEA
1.050OV 0.950UV
KV: <=25.000 <=69.000 <=138.000 <=230.000 <=345.000 >345.000

Figure 28

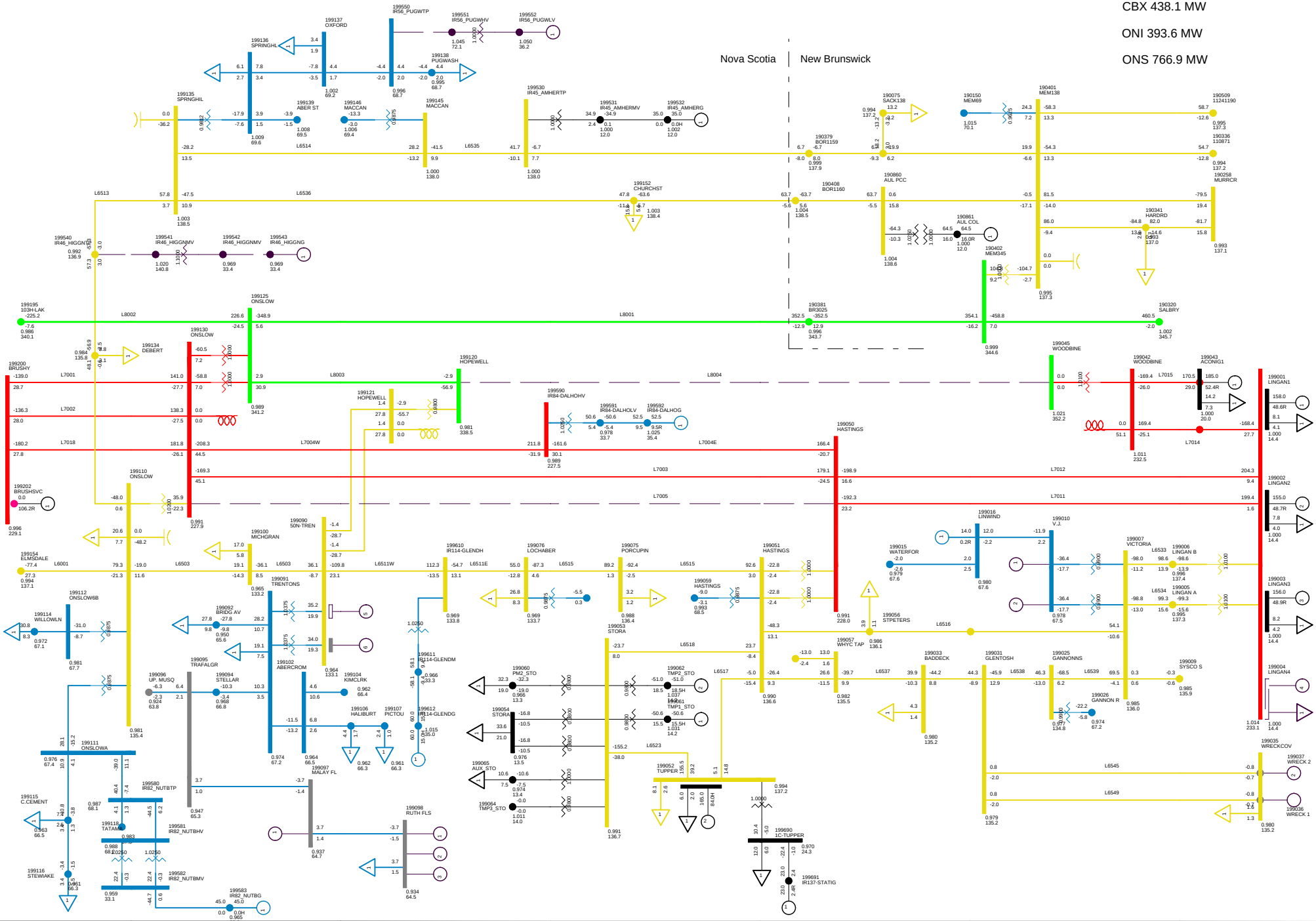

2010 SUMMER PEAK, NSLOAD=1700
LOSE STRAIT CROSSING WITH REDUCED SPS ARMING LEVEL
NORTHEASTERN NS FRI, FEB 06 2009 17:40

Total Wind Gen: 290.1 MW
Gross Lingan 469.0 MW
Gross Pt Aconi 185.0 MW
Gross Tupper 165.0 MW
Gross Trenton 0.0 MW
Gross Tuft's Cove 158.6 MW
Gross Wreck Cove 0.0 MW
Gross Gas Turbine 0.0 MW
Gross Small Hydro 42.9 MW
Net Stora Load 178.9 MW
Total BMPC Load 108.5 MW

Bus - VOLTAGE (KV/PU)
Branch - MW/MVAR
Equipment - MW/MVAR
110.0%RATEA
1.0500V 0.950UV
KV: <=25.000 <=69.000 <=138.000 <=230.000 <=345.000 >345.000

Figure 29

NSX 294.6 MW
CBX 775.2 MW
ONI 1032.1 MW
ONS 692.0 MW

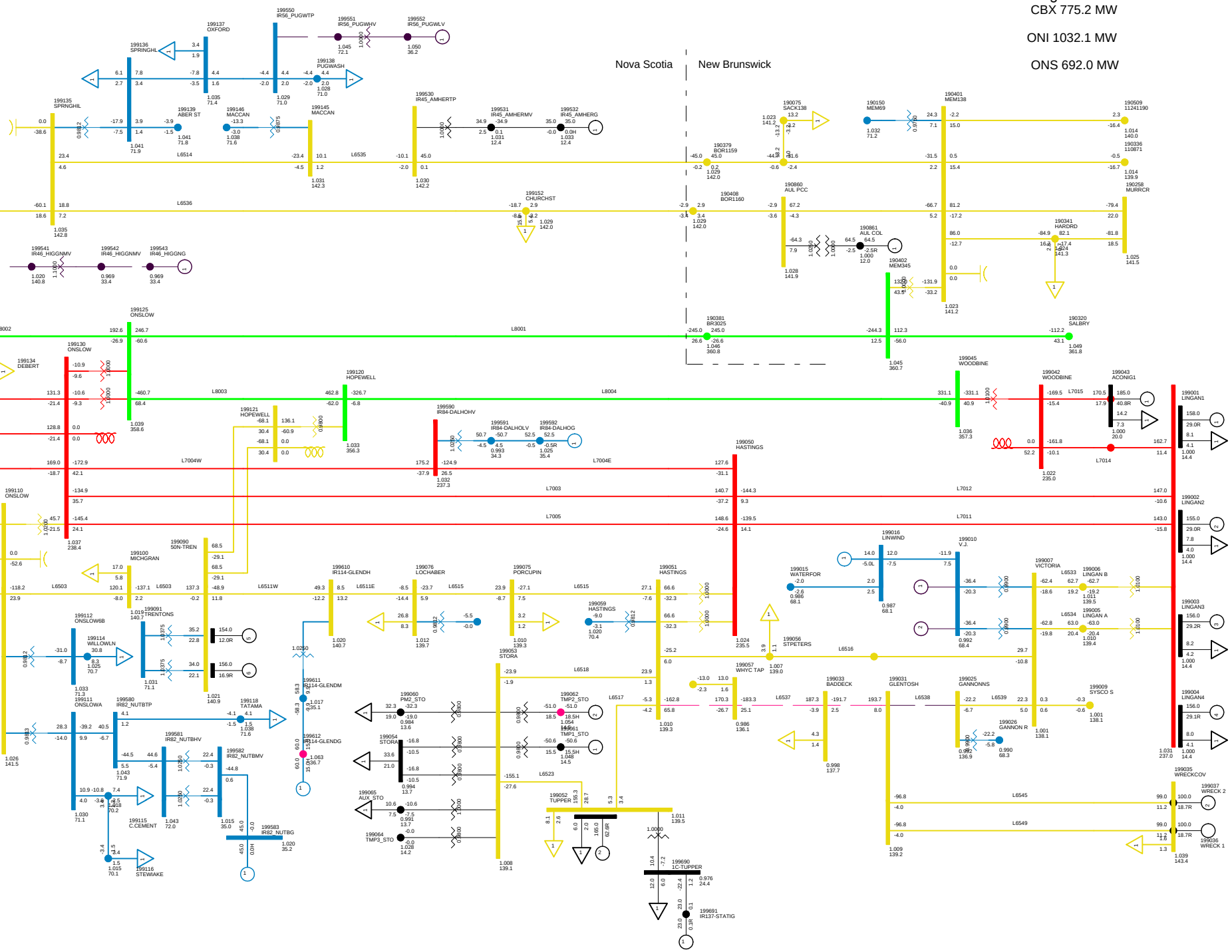

2013 SUMMER PEAK NS EXPORT 300 MW
C22 LOSE L6538
NORTHEASTERN NS TUE, DEC 09 2008 23:11

Total Wind Gen: 290.1 MW | Gross Tupper 165.0 MW | Gross Wreck Cove 200.0 MW | Net Stora Load 178.9 MW
Gross Lingan 625.0 MW | Gross Trenton 310.0 MW | Gross Gas Turbine 0.0 MW | Total BMPC Load 108.6 MW
Gross Pt Aconi 185.0 MW | Gross Tuft's Cove 229.2 MW | Gross Small Hydro 42.9 MW

Bus - VOLTAGE (KV/PU)
Branch - MW/MVAR
Equipment - MW/MVAR
110.0%RATEA
1.0500V 0.950UV
KV: <=25.000 <=69.000 <=138.000 <=230.000 <=345.000 >345.000

Figure 30

Figure 31

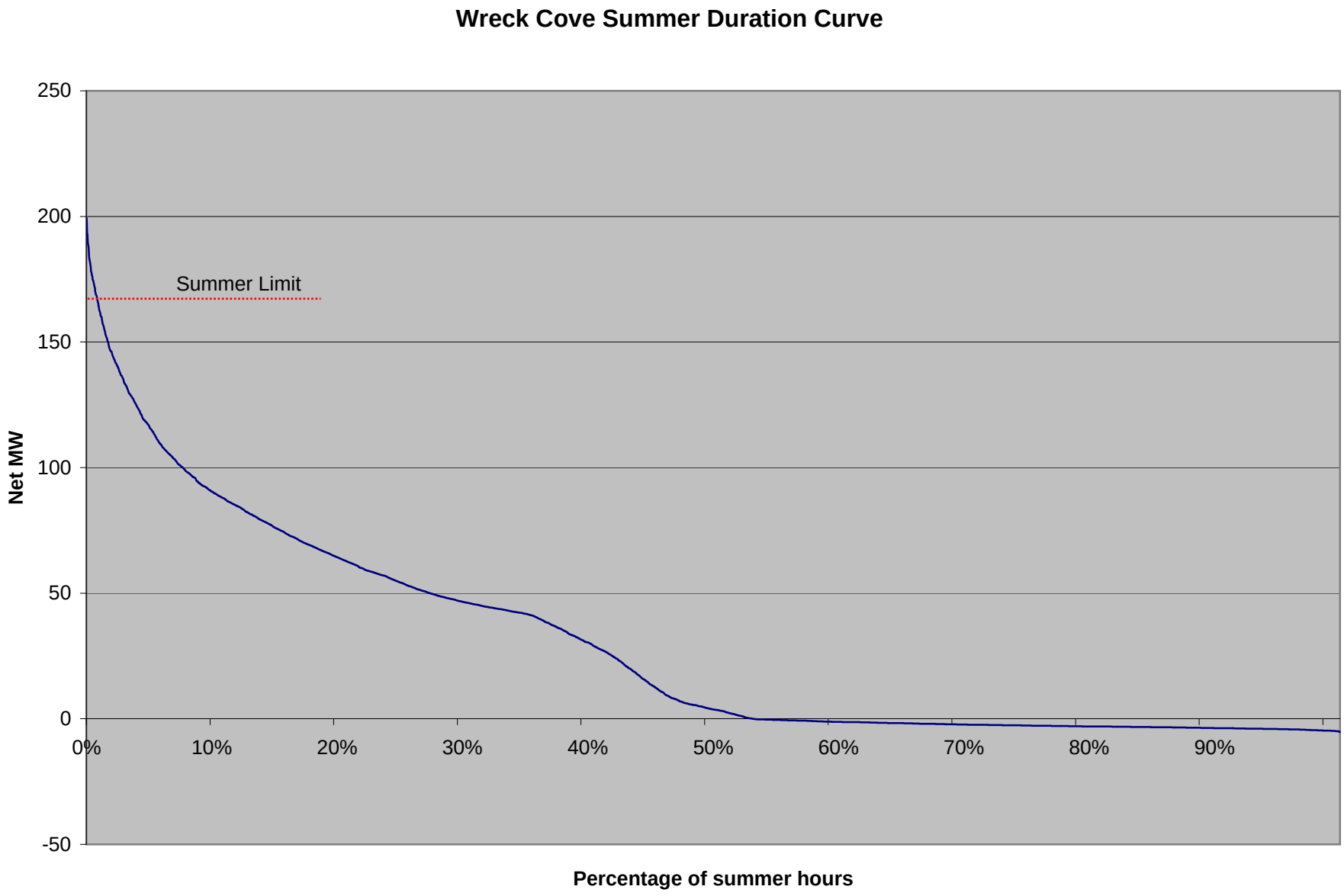
Wreck Cove Summer Duration Curve
250
200
150
100
50
0
-50
Net MW
Summer Limit
0%
10%
20%
30%
40%
50%
60%
70%
80%
90%
Percentage of summer hours

Total Wind Gen: 290.1 MW | Gross Tupper 165.0 MW | Gross Wreck Cove 200.0 MW

Gross Lingan 625.0 MW | Gross Trenton 310.0 MW | Gross Gas Turbine 0.0 MW

Gross Pt Aconi 185.0 MW | Gross Tuft's Cove 133.2 MW | Gross Small Hydro 42.9 MW

Net Stora Load 178.9 MW | Total BMPC Load 108.5 MW

NSX 285.4 MW

CBX 780.0 MW

ONI 1036.9 MW

ONS 705.9 MW

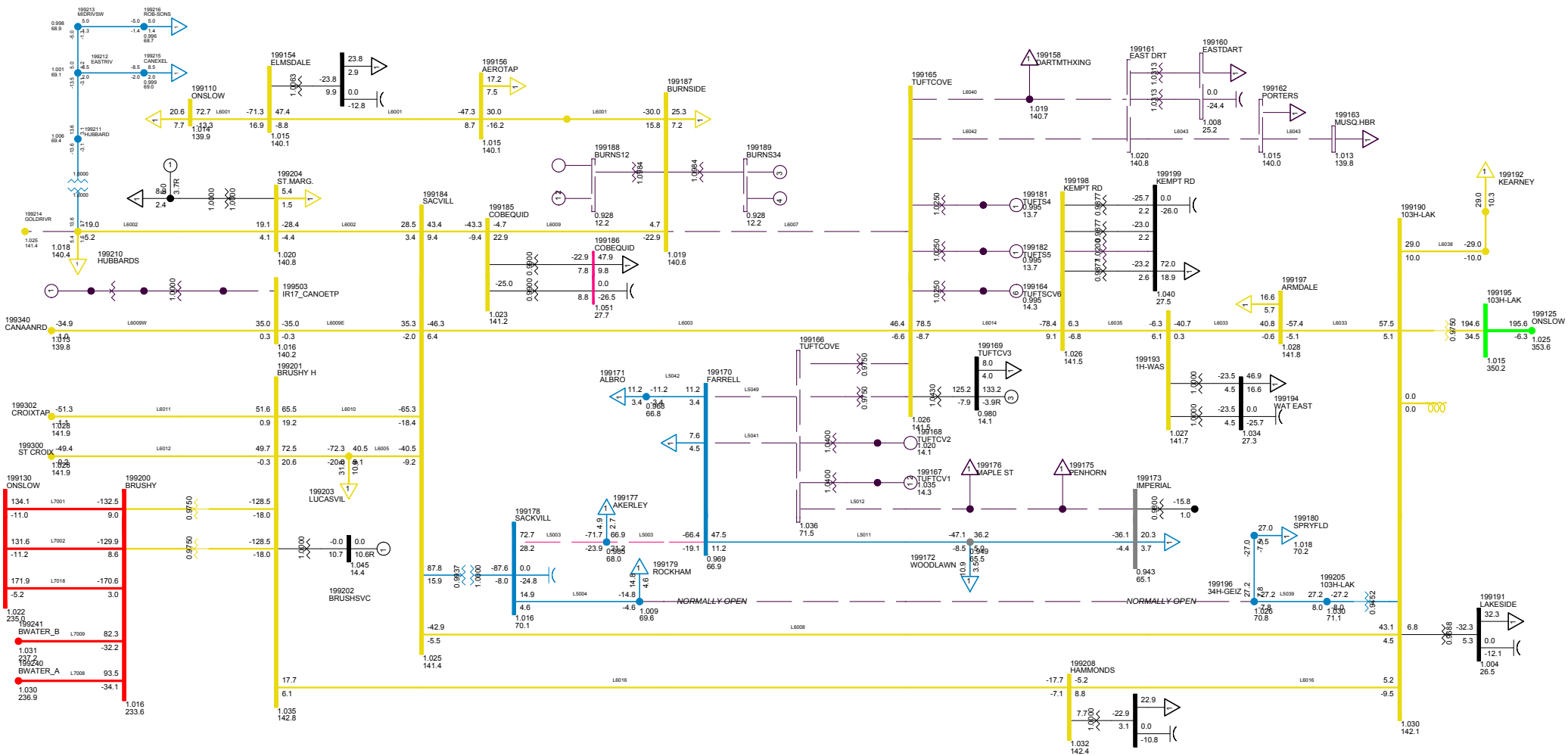

2013 SUMMER PEAK NS EXPORT 200
C45 BBU ON 91H-523
METRO ZONE TUE, DEC 09 2008 22:58

Bus - VOLTAGE (KV/PU)
Branch - MW/MVAR
Equipment - MW/MVAR
100.0%RATEA
1.050OV 0.950UV
KV: <=30.000 <=69.000 <=138.000 <=230.000 <=345.000 >345.000

Figure 32

Total Wind Gen: 140.6 MW
Gross Tupper 155.0 MW
Gross Wreck Cove 50.0 MW
Gross Lingan 448.1 MW
Gross Trenton 0.0 MW
Gross Gas Turbine 0.0 MW
Gross Pt Aconi 185.0 MW
Gross Tuft's Cove 0.0 MW
Gross Small Hydro 25.0 MW
Net Stora Load 117.4 MW
Total BMPC Load 42.5 MW

NSX 58.0 MW
CBX 580.3 MW
ONI 584.0 MW
ONS 519.3 MW

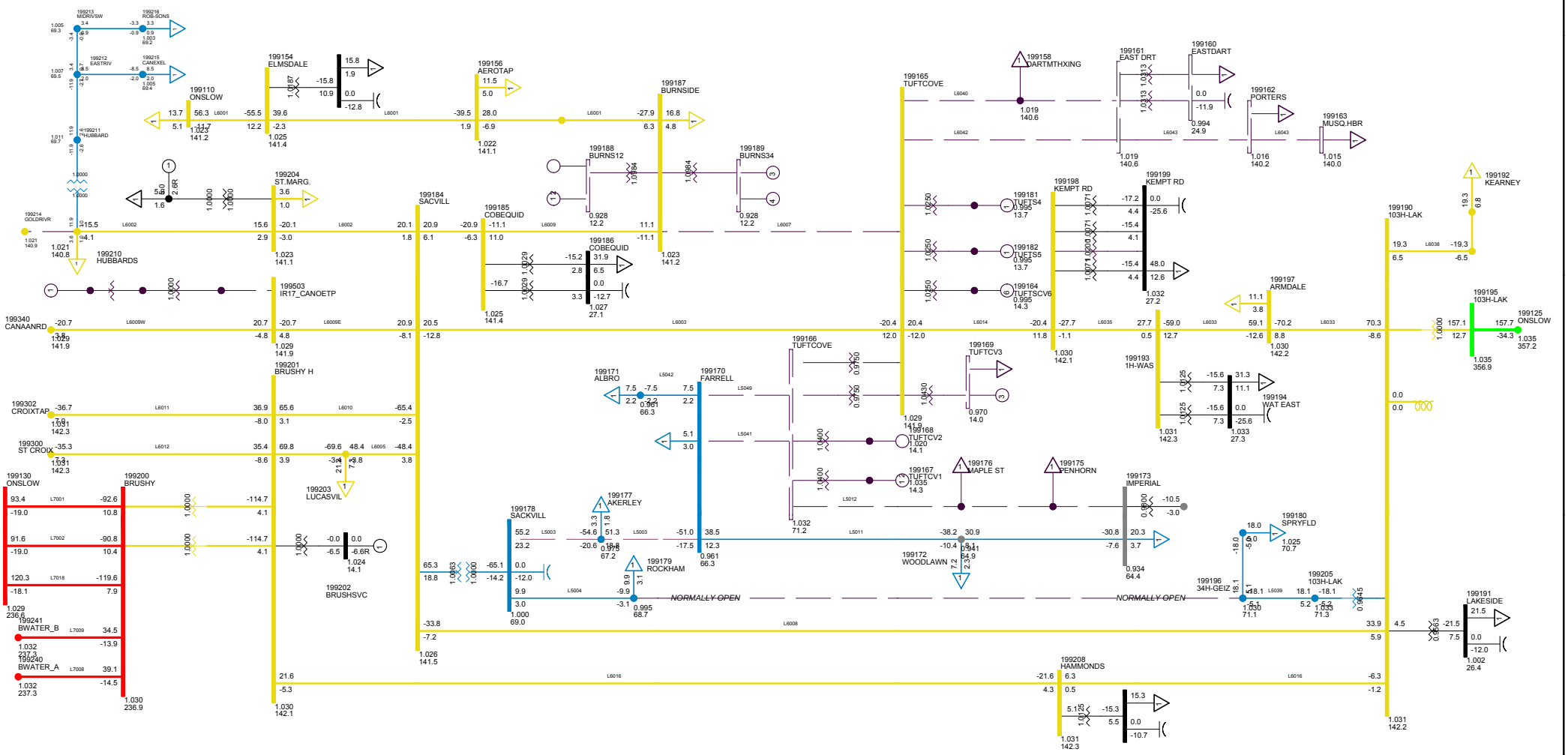

2013 LIGHT LOAD - NO TRENTON
C45 BBU ON 91H-523
METRO ZONE TUE, DEC 09 2008 22:26

Bus - VOLTAGE (KV/PU)
Branch - MW/MVAR
Equipment - MW/MVAR
100.0%RATEA
1.050OV 0.950UV
KV: <=30.000 <=69.000 <=138.000 <=230.000 <=345.000 >345.000

Figure 33

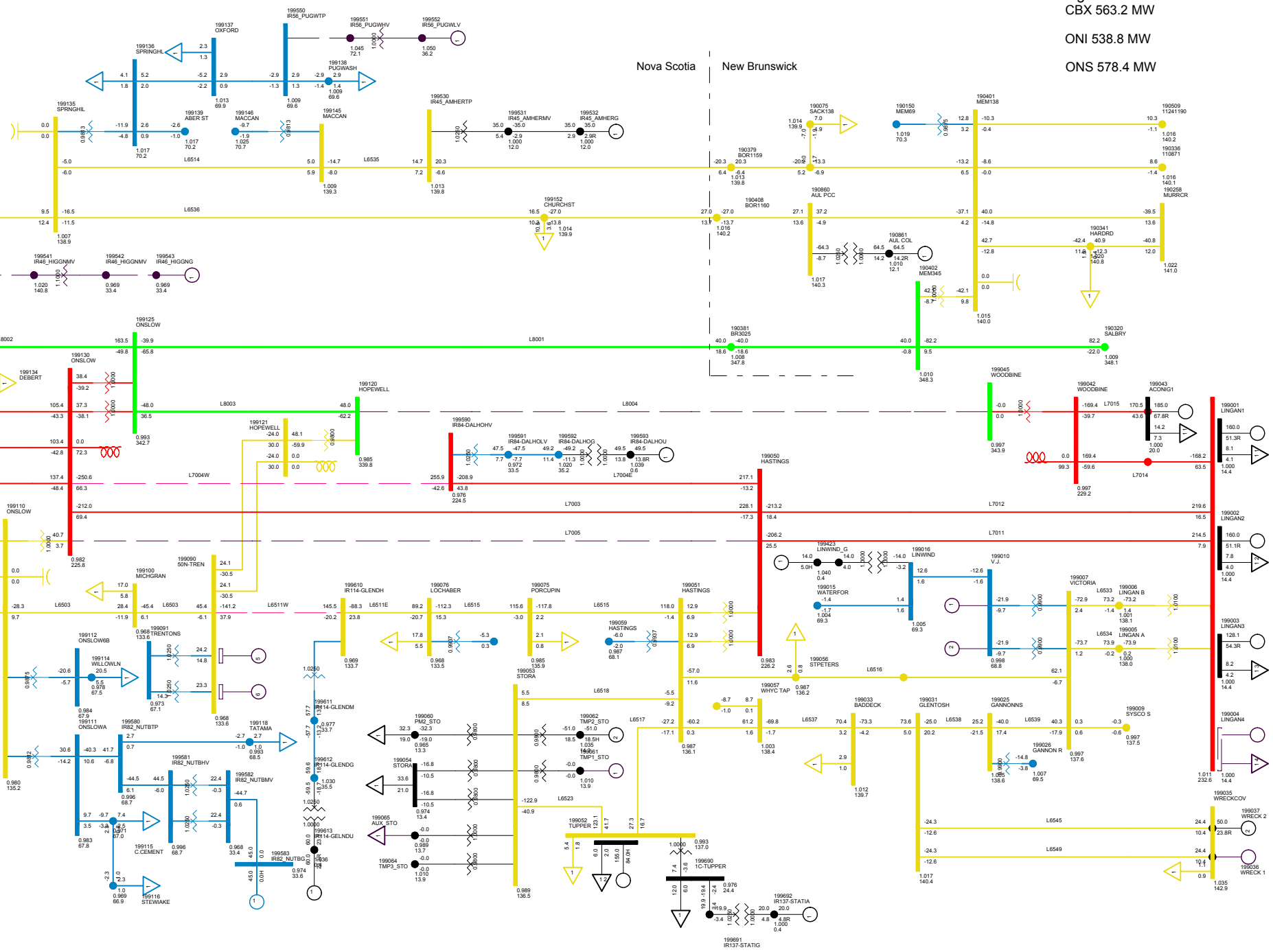

2010 LIGHT, NSLOAD=1150
C61 DCT STRAIT NO SPS
NORTHEASTERN NS SAT, FEB 07 2009 9:34

Total Wind Gen: 140.6 MW
Gross Lingan 448.1 MW
Gross Pt Aconi 185.0 MW
Gross Tupper 155.0 MW
Gross Trenton 0.0 MW
Gross Tuft's Cove 0.0 MW
Gross Wreck Cove 50.0 MW
Gross Gas Turbine 0.0 MW
Gross Small Hydro 25.0 MW
Net Stora Load 117.4 MW
Total BMPC Load 42.5 MW

Bus - VOLTAGE (KV/PU)
Branch - MW/MVAR
Equipment - MW/MVAR
110.0%RATEA
1.050UV/0.950UV
KV: <=25.000 <=69.000 <=138.000 <=230.000 <=345.000 >345.000

Figure 34

NSX -166.5 MW
CBX 425.3 MW
ONI 418.2 MW
ONS 577.6 MW

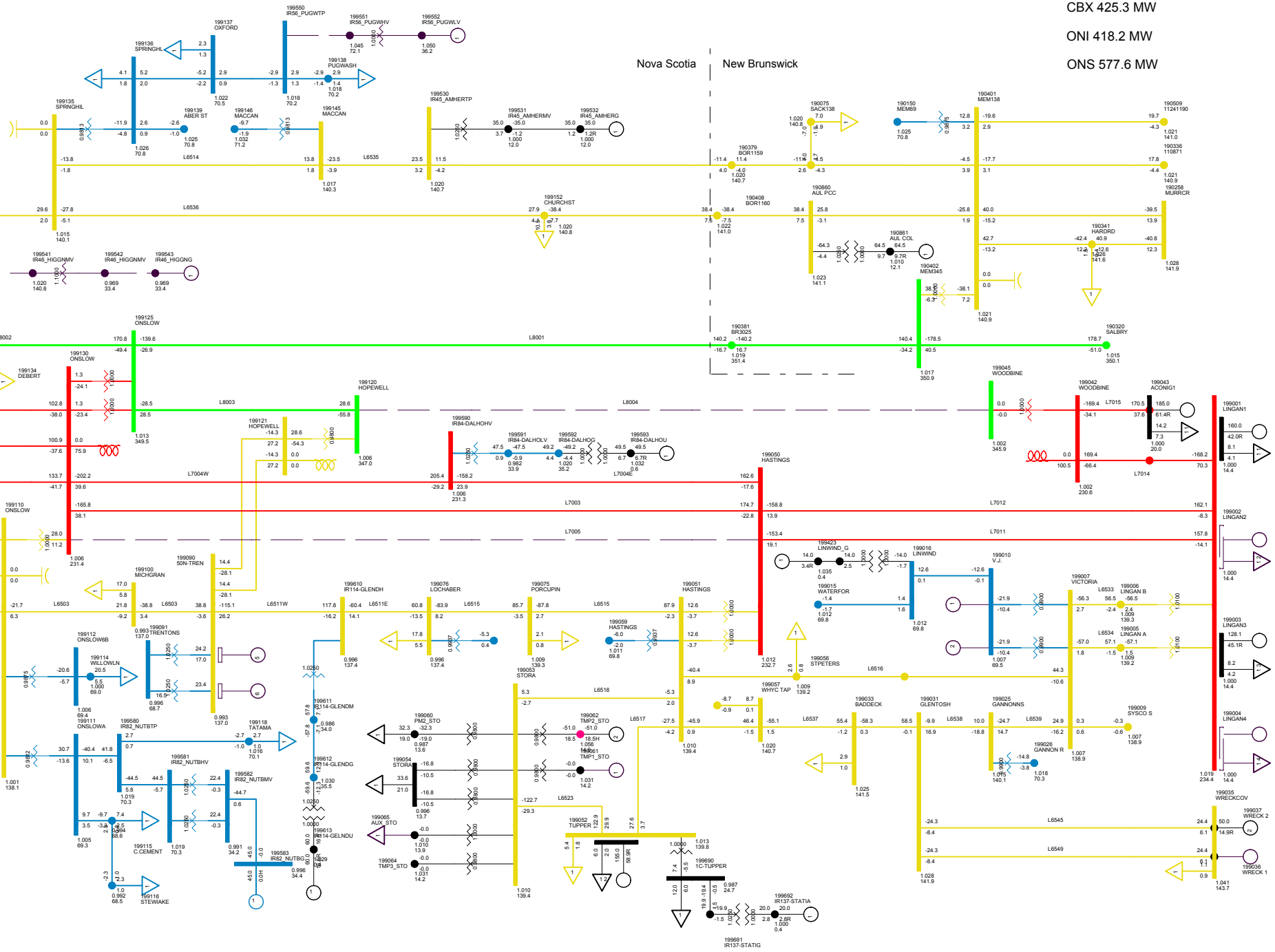

2010 LIGHT, NSLOAD=1150
C61 DCT STRAIT SPS ARMED
NORTHEASTERN NS SAT, FEB 07 2009 9:36

Total Wind Gen: 140.6 MW
Gross Lingan 288.1 MW
Gross Pt Aconi 185.0 MW
Gross Tupper 155.0 MW
Gross Trenton 0.0 MW
Gross Tuft's Cove 0.0 MW
Gross Wreck Cove 50.0 MW
Gross Gas Turbine 0.0 MW
Gross Small Hydro 25.0 MW
Net Stora Load 117.4 MW
Total BMPC Load 42.5 MW

Bus - VOLTAGE (KV/PU)
Branch - MW/MVAR
Equipment - MW/MVAR
110.0%RATEA
1.050(X)/0.950(U)
KV: <=25.000 <=69.000 <=138.000 <=230.000 <=345.000 >345.000

Figure 35

Figure 36 - Fault on L6014 with Primary protection failure

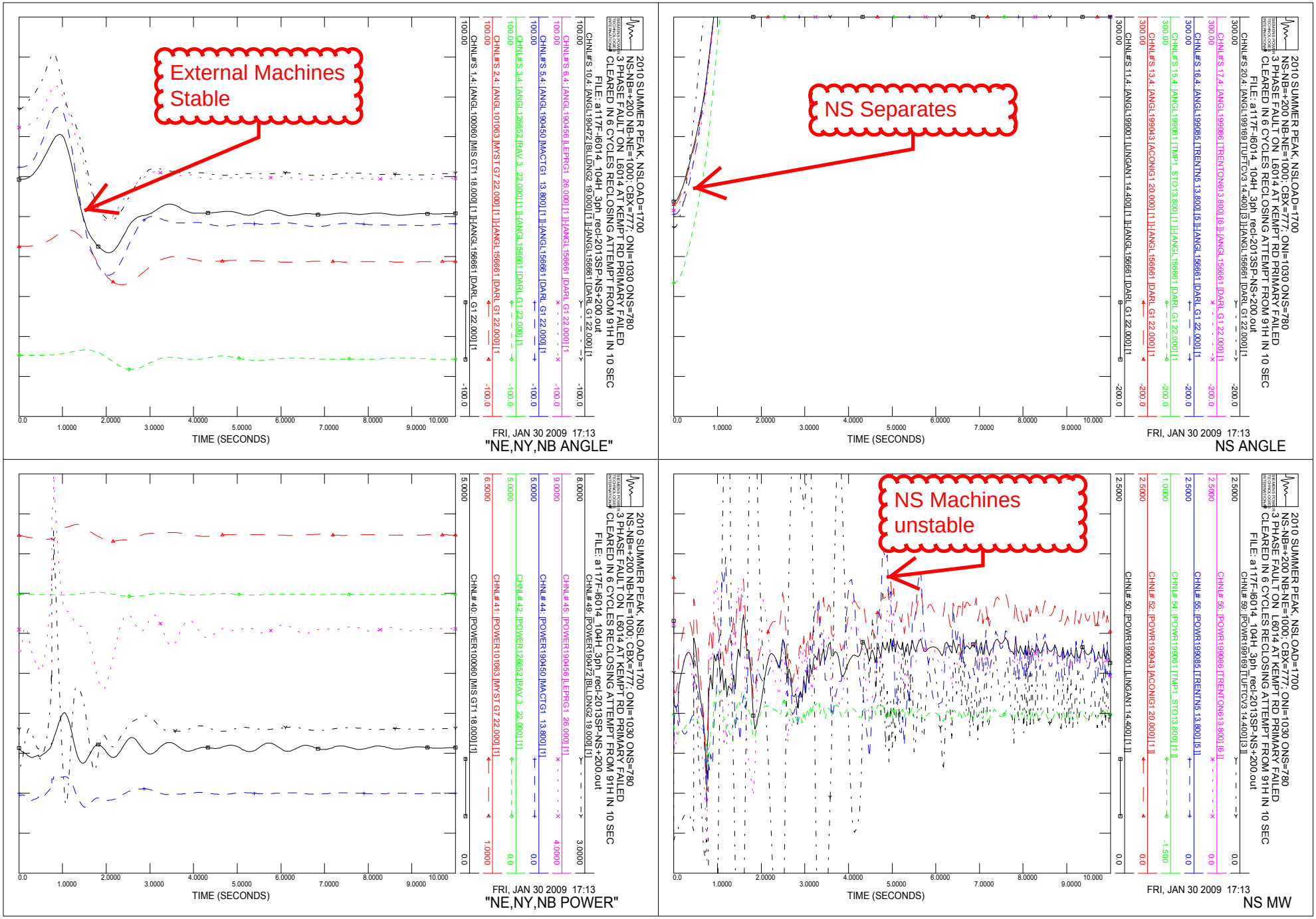

Figure 37 - Tufts Cove Machines trip

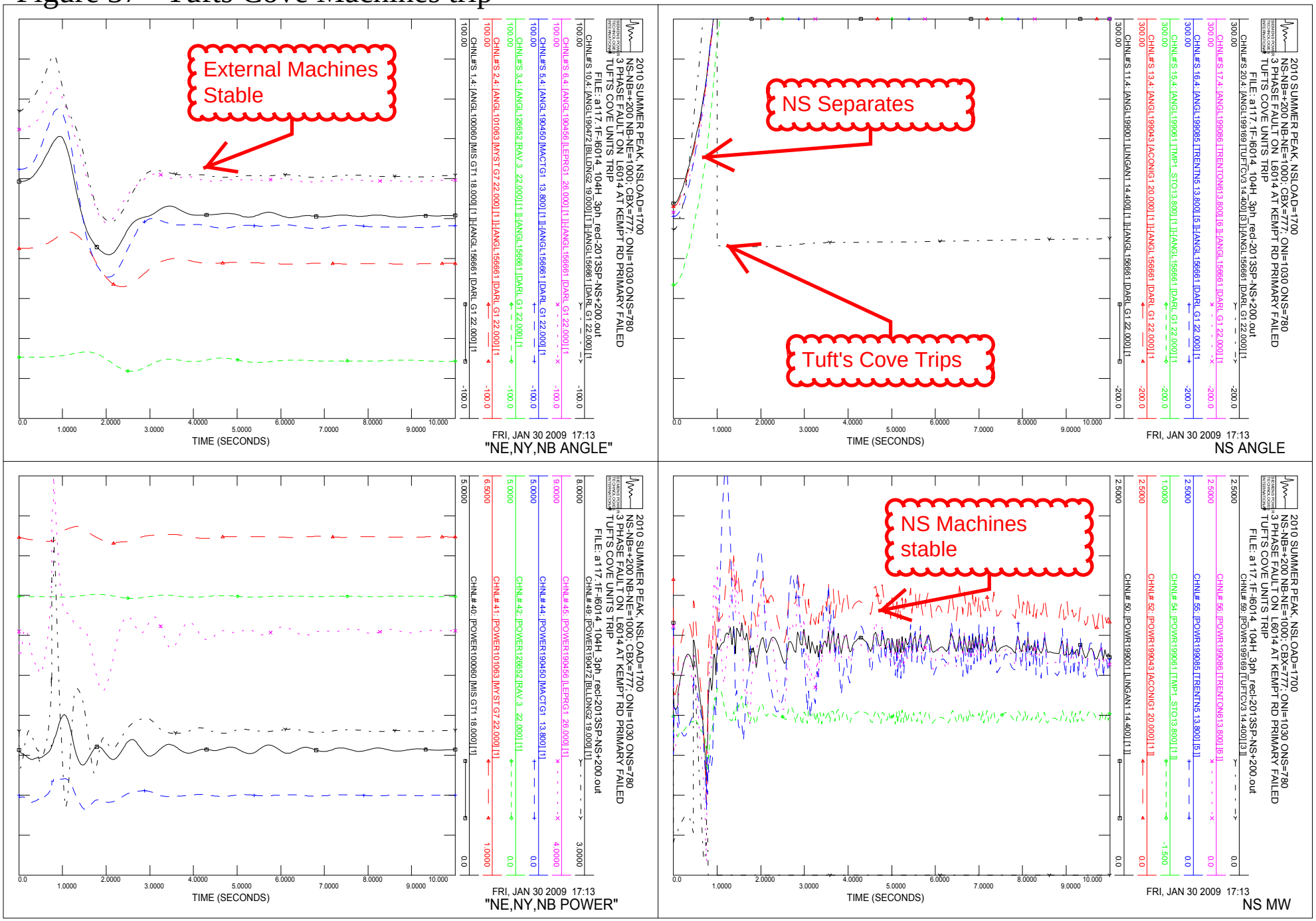

Figure 38a - Fault on L6014 with high-speed primary Summer Peak

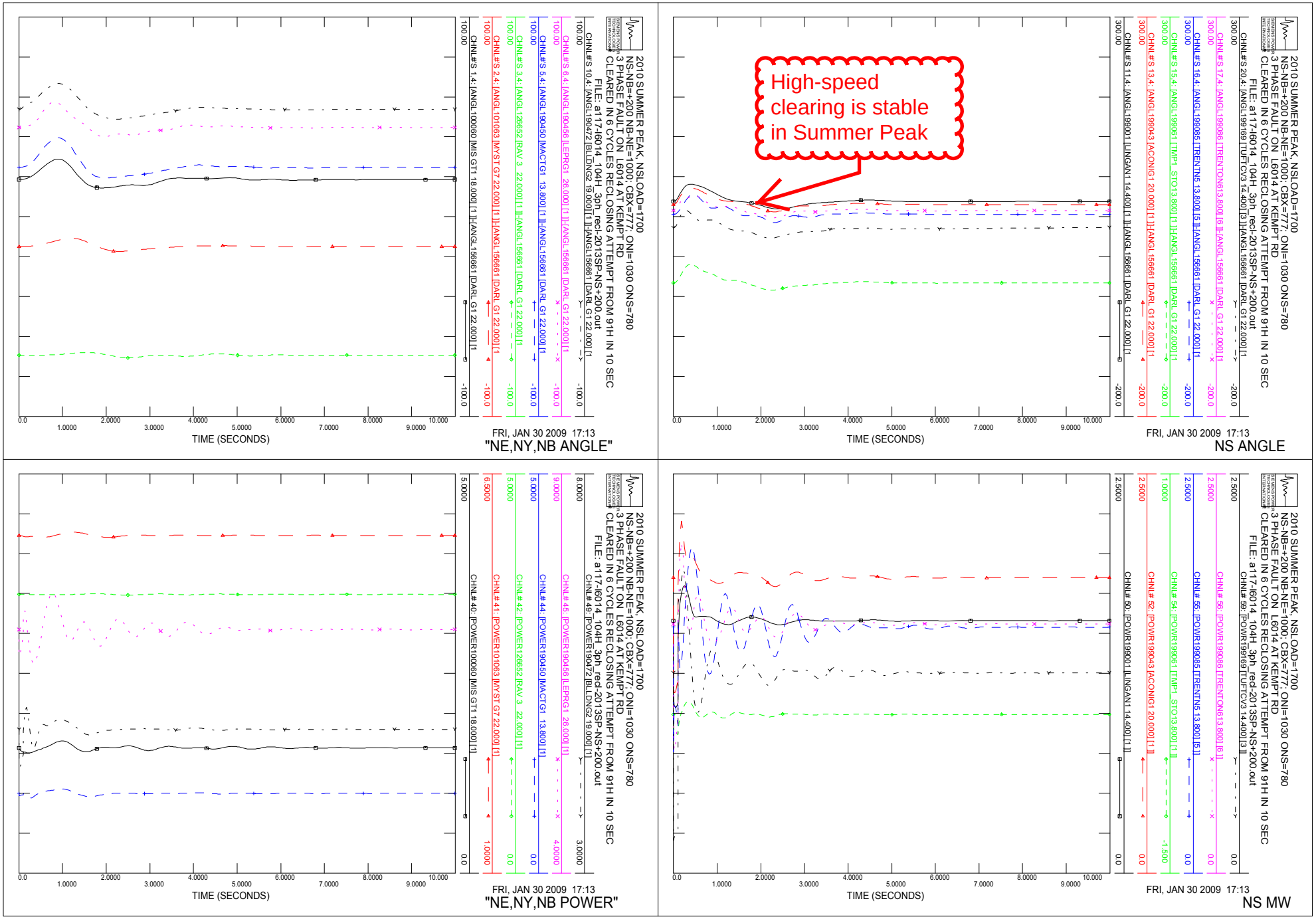

Figure 38b

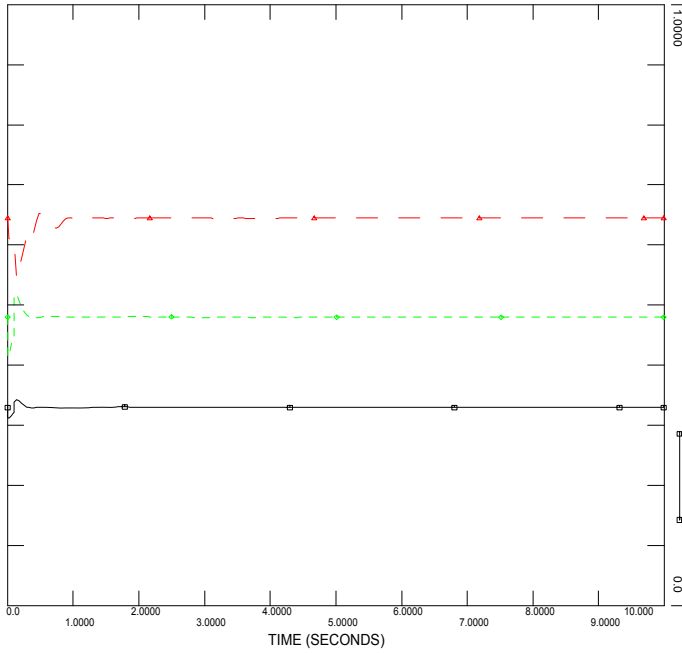
2010 SUMMER PEAK, NSLOAD=1700
NS-NB=+200 NB-NE=1000; CBX=777; ONI=1030 ONS=780
3 PHASE FAULT ON L6014 AT KEMPT RD
CLEARED IN 6 CYCLES RECLOSING ATTEMPT FROM 91H IN 10 SEC
FILE: a117-l6014_104H_3ph_recl-2013SP-NS+200.out
CHNL# 73: [POWER KENT HILLS WIND] 1.0000 0.0
CHNL# 72: [POWER AULAC WIND] 1.0000 0.0
CHNL# 71: [POWER CARIBOU WIND] 1.0000 0.0
0.0 1.0000 2.0000 3.0000 4.0000 5.0000 6.0000 7.0000 8.0000 9.0000 10.000
TIME (SECONDS)
FRI, JAN 30 2009 17:13
NB WIND MW

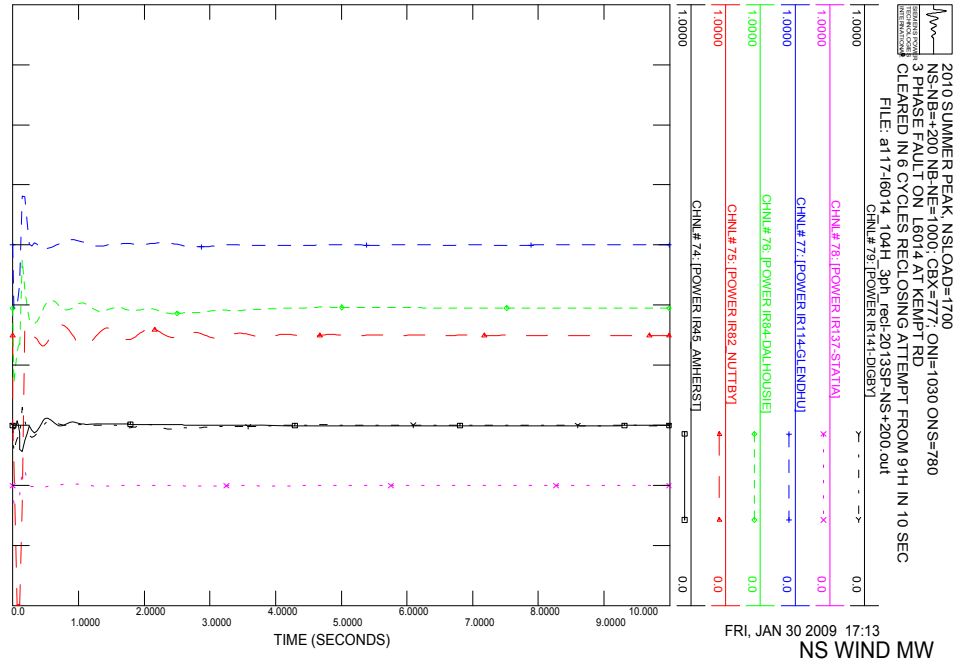
2010 SUMMER PEAK, NSLOAD=1700
NS-NB=+200 NB-NE=1000; CBX=777; ONI=1030 ONS=780
3 PHASE FAULT ON L6014 AT KEMPT RD
CLEARED IN 6 CYCLES RECLOSING ATTEMPT FROM 91H IN 10 SEC
FILE: a117-l6014_104H_3ph_recl-2013SP-NS+200.out
CHNL# 79: [POWER IR141-DIGBY] 1.0000 0.0
CHNL# 78: [POWER IR137-STATIA] 1.0000 0.0
CHNL# 77: [POWER IR114-GLENDHU] 1.0000 0.0
CHNL# 76: [POWER IR84-DALHOUSIE] 1.0000 0.0
CHNL# 75: [POWER IR82_NUTTBY] 1.0000 0.0
CHNL# 74: [POWER IR45_AMHERST] 1.0000 0.0
0.0 1.0000 2.0000 3.0000 4.0000 5.0000 6.0000 7.0000 8.0000 9.0000 10.000
TIME (SECONDS)
FRI, JAN 30 2009 17:13
NS WIND MW

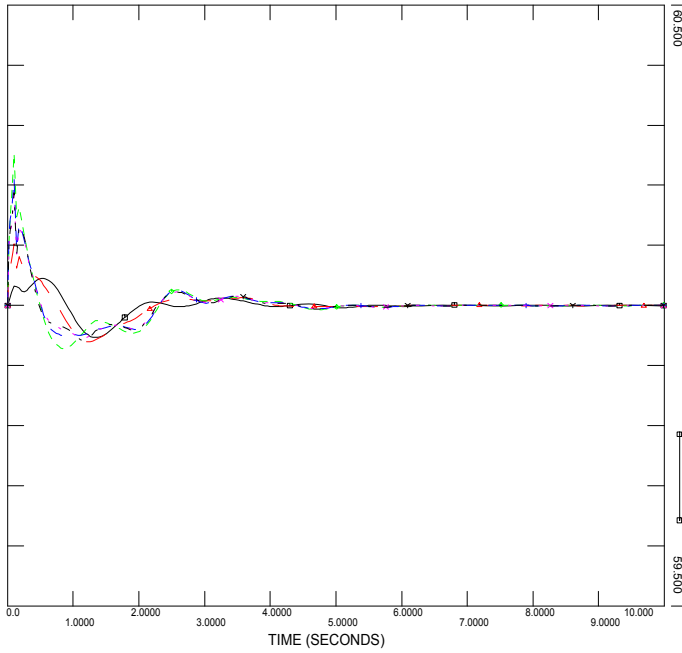
2010 SUMMER PEAK, NSLOAD=1700
NS-NB=+200 NB-NE=1000; CBX=777; ONI=1030 ONS=780
3 PHASE FAULT ON L6014 AT KEMPT RD
CLEARED IN 6 CYCLES RECLOSING ATTEMPT FROM 91H IN 10 SEC
FILE: a117-l6014_104H_3ph_recl-2013SP-NS+200.out
CHNL# 126: 60*(1+[FREQ199195 [103H-LAK345.00]]) 60.500 59.500
CHNL# 125: 60*(1+[FREQ199125 [ONSLOW_345.00]]) 60.500 59.500
CHNL# 124: 60*(1+[FREQ199120 [HOPEWELL345.00]]) 60.500 59.500
CHNL# 123: 60*(1+[FREQ199045 [WOODBINE345.00]]) 60.500 59.500
CHNL# 122: 60*(1+[FREQ190320 [SALBRY_345.00]]) 60.500 59.500
CHNL# 120: 60*(1+[FREQ 70002 [ORRINGTN345.00]]) 60.500 59.500
0.0 1.0000 2.0000 3.0000 4.0000 5.0000 6.0000 7.0000 8.0000 9.0000 10.000
TIME (SECONDS)
FRI, JAN 30 2009 17:13
FREQUENCY HZ

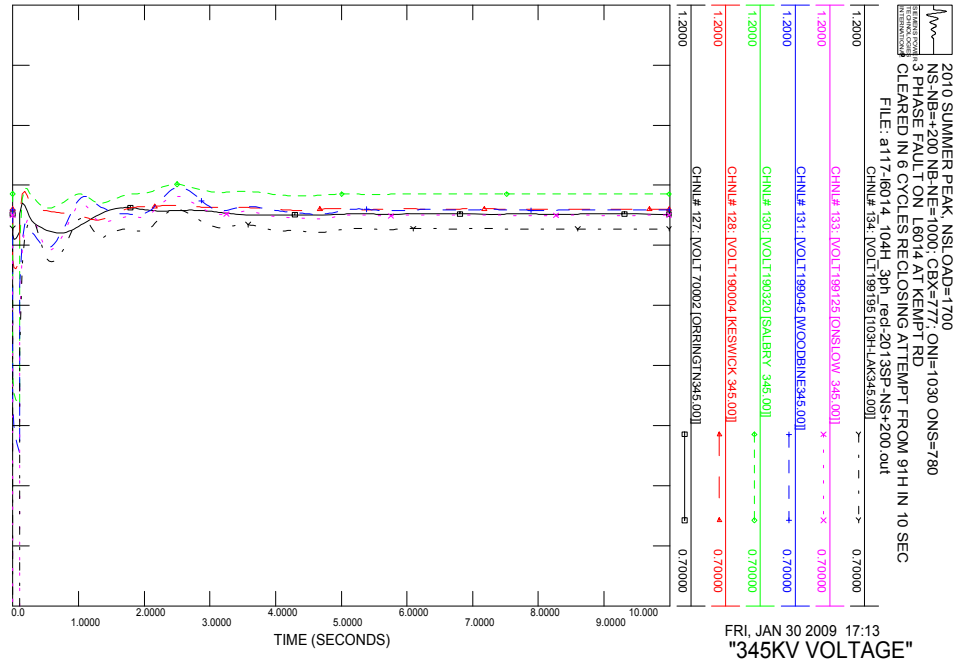
2010 SUMMER PEAK, NSLOAD=1700
NS-NB=+200 NB-NE=1000; CBX=777; ONI=1030 ONS=780
3 PHASE FAULT ON L6014 AT KEMPT RD
CLEARED IN 6 CYCLES RECLOSING ATTEMPT FROM 91H IN 10 SEC
FILE: a117-l6014_104H_3ph_recl-2013SP-NS+200.out
CHNL# 134: [VOLT199195 [103H-LAK345.00]] 1.2000 0.70000
CHNL# 133: [VOLT199125 [ONSLOW_345.00]] 1.2000 0.70000
CHNL# 131: [VOLT199045 [WOODBINE345.00]] 1.2000 0.70000
CHNL# 130: [VOLT190320 [SALBRY_345.00]] 1.2000 0.70000
CHNL# 128: [VOLT190004 [KESWICK 345.00]] 1.2000 0.70000
CHNL# 127: [VOLT 70002 [ORRINGTN345.00]] 1.2000 0.70000
0.0 1.0000 2.0000 3.0000 4.0000 5.0000 6.0000 7.0000 8.0000 9.0000 10.000
TIME (SECONDS)
FRI, JAN 30 2009 17:13
"345KV VOLTAGE"

Figure 38C

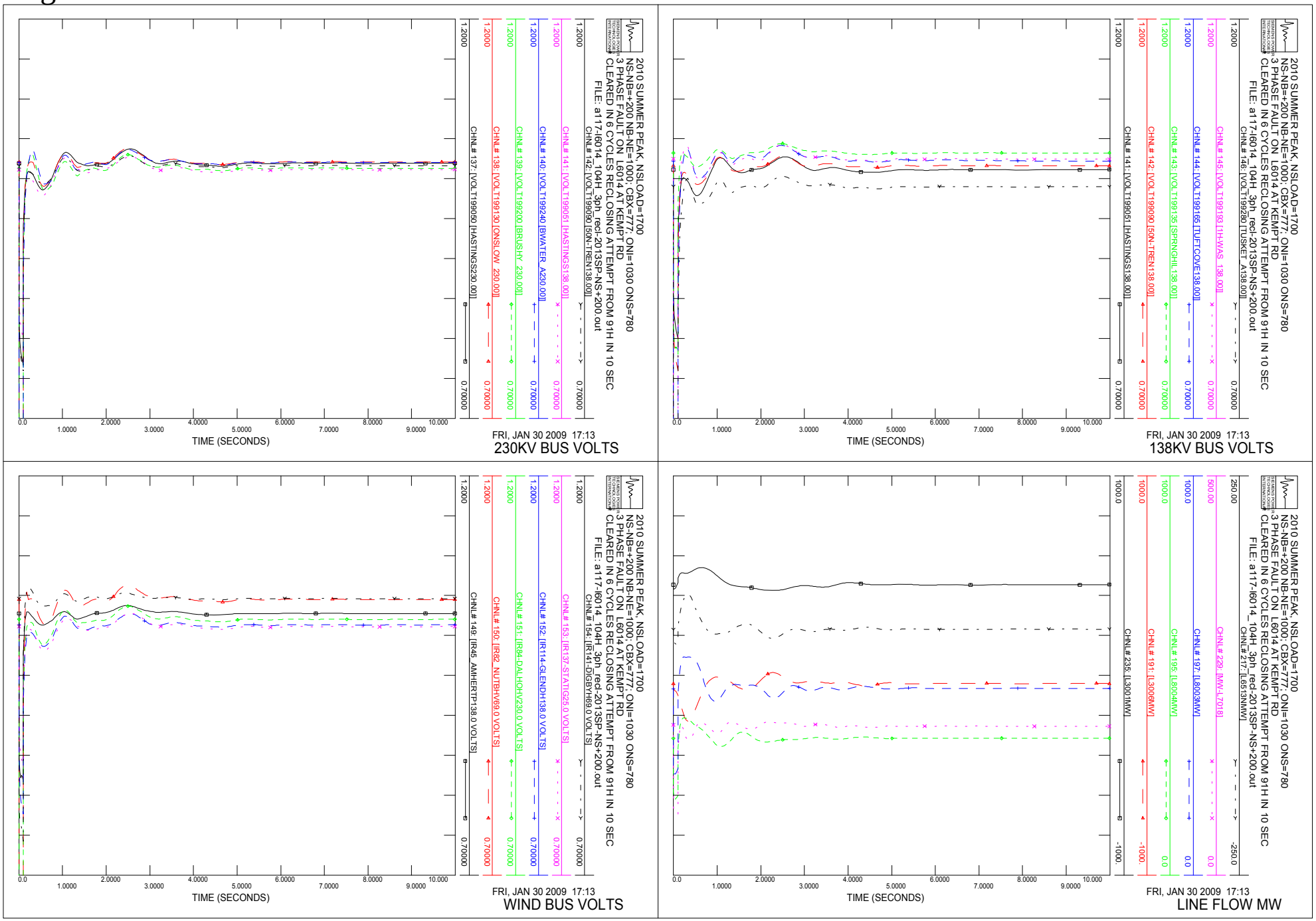
2010 SUMMER PEAK, NSLOAD=1700
NS-NB=+200 NB-NE=1000; CBX=777; ONI=1030 ONS=780
3 PHASE FAULT ON L6014 AT KEMPT RD
CLEARED IN 6 CYCLES RECLOSING ATTEMPT FROM 91H IN 10 SEC
FILE: a117-l6014_104H_3ph_recl-2013SP-NS+200.out
CHNL# 146: [VOLT199280 [TUSKET_A138.00]] 1.2000 0.70000
CHNL# 145: [VOLT199193 [1H-WAS_138.00]] 1.2000 0.70000
CHNL# 144: [VOLT199166 [TUFTCOVE138.00]] 1.2000 0.70000
CHNL# 143: [VOLT199135 [SPRNGHIL138.00]] 1.2000 0.70000
CHNL# 142: [VOLT199090 [50N-TREN138.00]] 1.2000 0.70000
CHNL# 141: [VOLT199051 [HASTINGS138.00]] 1.2000 0.70000
0.0 1.0000 2.0000 3.0000 4.0000 5.0000 6.0000 7.0000 8.0000 9.0000 10.000
TIME (SECONDS)
FRI, JAN 30 2009 17:13
138KV BUS VOLTS
2010 SUMMER PEAK, NSLOAD=1700
NS-NB=+200 NB-NE=1000; CBX=777; ONI=1030 ONS=780
3 PHASE FAULT ON L6014 AT KEMPT RD
CLEARED IN 6 CYCLES RECLOSING ATTEMPT FROM 91H IN 10 SEC
FILE: a117-l6014_104H_3ph_recl-2013SP-NS+200.out
CHNL# 142: [VOLT199090 [50N-TREN138.00]] 1.2000 0.70000
CHNL# 141: [VOLT199051 [HASTINGS138.00]] 1.2000 0.70000
CHNL# 140: [VOLT199240 [BWATER_A230.00]] 1.2000 0.70000
CHNL# 139: [VOLT199200 [BRUSHY_230.00]] 1.2000 0.70000
CHNL# 138: [VOLT199130 [ONSLOW_230.00]] 1.2000 0.70000
CHNL# 137: [VOLT199050 [HASTINGS230.00]] 1.2000 0.70000
0.0 1.0000 2.0000 3.0000 4.0000 5.0000 6.0000 7.0000 8.0000 9.0000 10.000
TIME (SECONDS)
FRI, JAN 30 2009 17:13
230KV BUS VOLTS
2010 SUMMER PEAK, NSLOAD=1700
NS-NB=+200 NB-NE=1000; CBX=777; ONI=1030 ONS=780
3 PHASE FAULT ON L6014 AT KEMPT RD
CLEARED IN 6 CYCLES RECLOSING ATTEMPT FROM 91H IN 10 SEC
FILE: a117-l6014_104H_3ph_recl-2013SP-NS+200.out
CHNL# 217: [L6513NMW] 250.00 -250.0
CHNL# 229: [MW-L7018] 500.00 0.0
CHNL# 197: [L8003MW] 1000.0 0.0
CHNL# 195: [L8004MW] 1000.0 0.0
CHNL# 191: [L3006MW] 1000.0 -1000.
CHNL# 235: [L3001MW] 1000.0 -1000.
0.0 1.0000 2.0000 3.0000 4.0000 5.0000 6.0000 7.0000 8.0000 9.0000 10.000
TIME (SECONDS)
FRI, JAN 30 2009 17:13
LINE FLOW MW
2010 SUMMER PEAK, NSLOAD=1700
NS-NB=+200 NB-NE=1000; CBX=777; ONI=1030 ONS=780
3 PHASE FAULT ON L6014 AT KEMPT RD
CLEARED IN 6 CYCLES RECLOSING ATTEMPT FROM 91H IN 10 SEC
FILE: a117-l6014_104H_3ph_recl-2013SP-NS+200.out
CHNL# 154: [IR141-DIGBYH69.0 VOLTS] 1.2000 0.70000
CHNL# 153: [IR137-STATIG25.0 VOLTS] 1.2000 0.70000
CHNL# 152: [IR114-GLENDH138.0 VOLTS] 1.2000 0.70000
CHNL# 151: [IR84-DALHOHV230.0 VOLTS] 1.2000 0.70000
CHNL# 150: [IR82_NUTBHV69.0 VOLTS] 1.2000 0.70000
CHNL# 149: [IR45_AMHERTP138.0 VOLTS] 1.2000 0.70000
0.0 1.0000 2.0000 3.0000 4.0000 5.0000 6.0000 7.0000 8.0000 9.0000 10.000
TIME (SECONDS)
FRI, JAN 30 2009 17:13
WIND BUS VOLTS

Figure 39a - Winter Peak Primary Protection

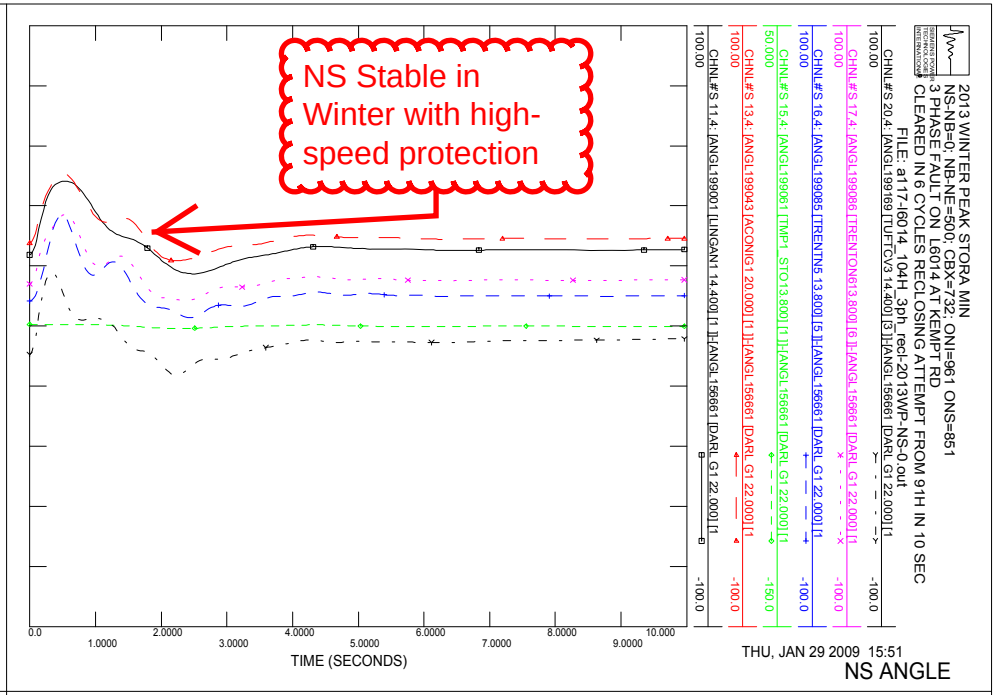

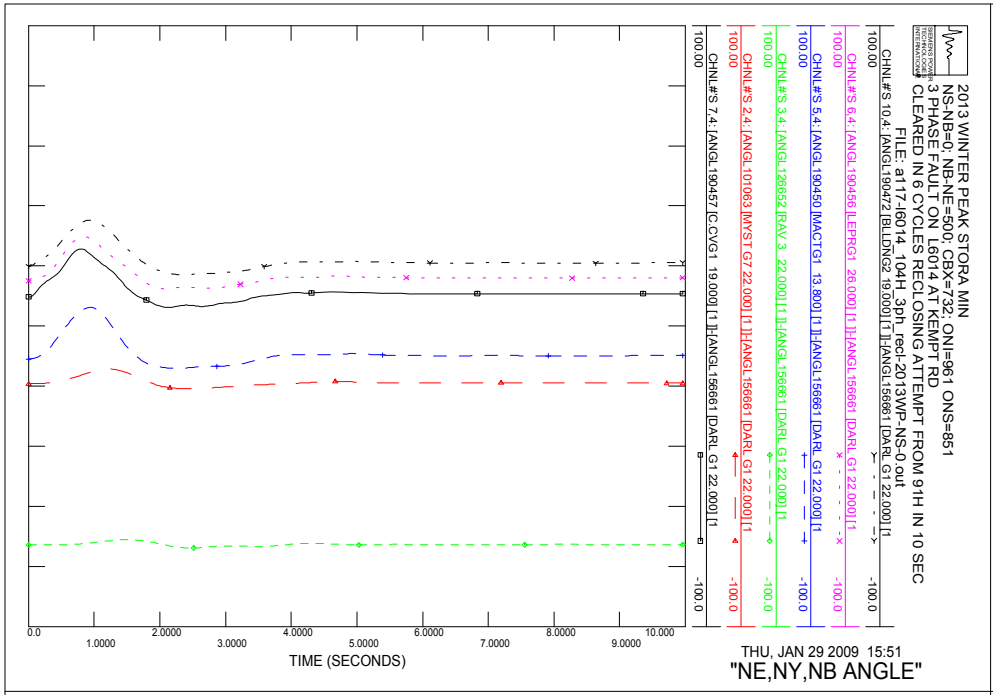

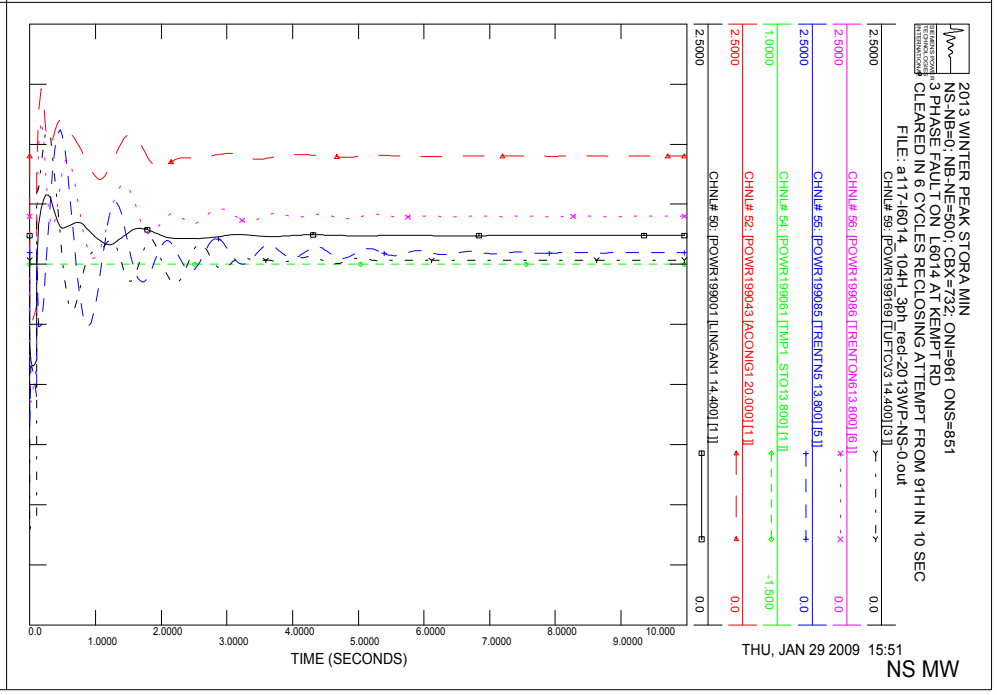

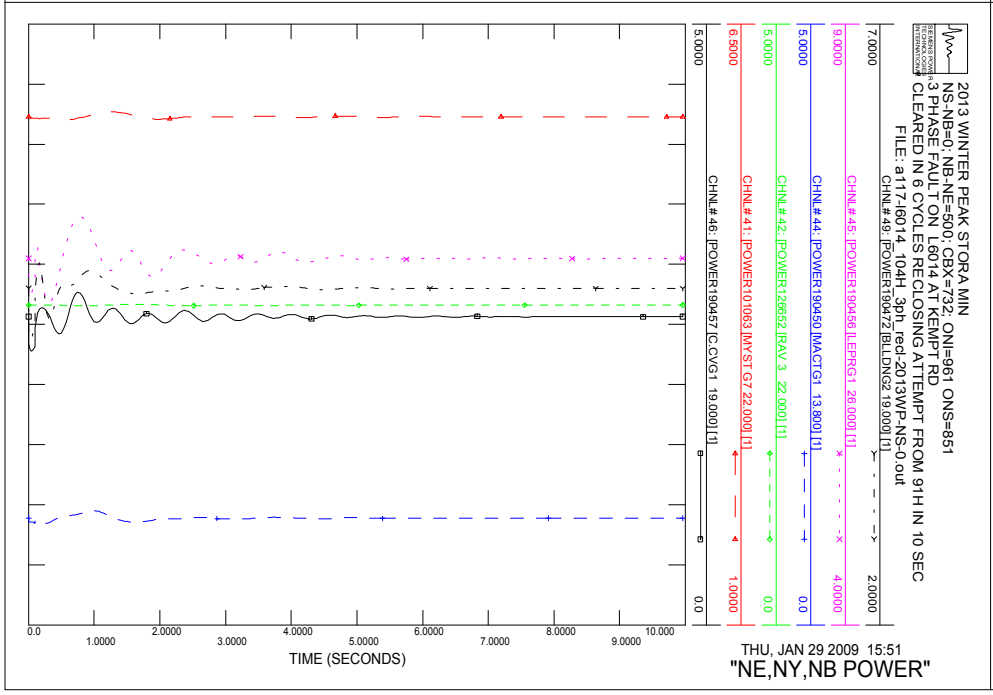

Figure 39b

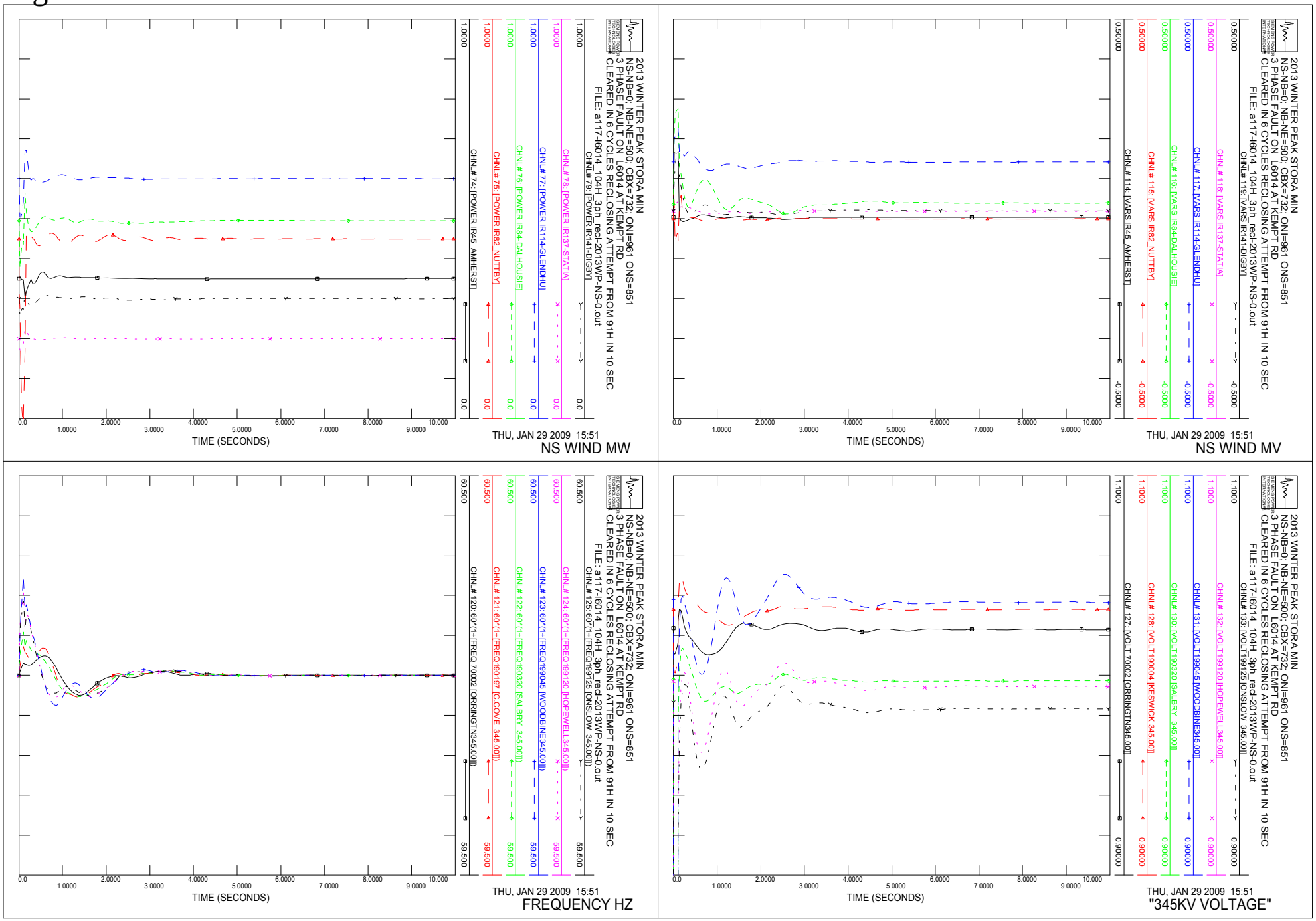
2013 WINTER PEAK STORA MIN
NS-NB=0; NB-NE=500; CBX=732; ONI=961 ONS=851
3 PHASE FAULT ON L6014 AT KEMPT RD
CLEARED IN 6 CYCLES RECLOSING ATTEMPT FROM 91H IN 10 SEC
FILE: a117-l6014_104H_3ph_recl-2013WP-NS-0.out
CHNL# 119: [VARS IR141-DIGBY]
CHNL# 118: [VARS IR137-STATIA]
CHNL# 117: [VARS IR114-GLENDHU]
CHNL# 116: [VARS IR84-DALHOUSIE]
CHNL# 115: [VARS IR82_NUTTBY]
CHNL# 114: [VARS IR45_AMHERST]
0.50000
-0.5000
0.0
1.0000
2.0000
3.0000
4.0000
5.0000
6.0000
7.0000
8.0000
9.0000
10.000
TIME (SECONDS)
THU, JAN 29 2009 15:51
NS WIND MV
CHNL# 79: [POWER IR141-DIGBY]
CHNL# 78: [POWER IR137-STATIA]
CHNL# 77: [POWER IR114-GLENDHU]
CHNL# 76: [POWER IR84-DALHOUSIE]
CHNL# 75: [POWER IR82_NUTTBY]
CHNL# 74: [POWER IR45_AMHERST]
NS WIND MW
CHNL# 133: [VOLT199125 [ONSLOW 345.00]]
CHNL# 132: [VOLT199120 [HOPEWELL345.00]]
CHNL# 131: [VOLT199045 [WOODBINE345.00]]
CHNL# 130: [VOLT190320 [SALBRY 345.00]]
CHNL# 128: [VOLT190004 [KESWICK 345.00]]
CHNL# 127: [VOLT 70002 [ORRINGTN345.00]]
0.90000
1.1000
"345KV VOLTAGE"
CHNL# 125: 60*(1+[FREQ199125 [ONSLOW 345.00]])
CHNL# 124: 60*(1+[FREQ199120 [HOPEWELL345.00]])
CHNL# 123: 60*(1+[FREQ199045 [WOODBINE345.00]])
CHNL# 122: 60*(1+[FREQ190320 [SALBRY 345.00]])
CHNL# 121: 60*(1+[FREQ190197 [C.COVE 345.00]])
CHNL# 120: 60*(1+[FREQ 70002 [ORRINGTN345.00]])
60.500
59.500
FREQUENCY HZ

Figure 39c

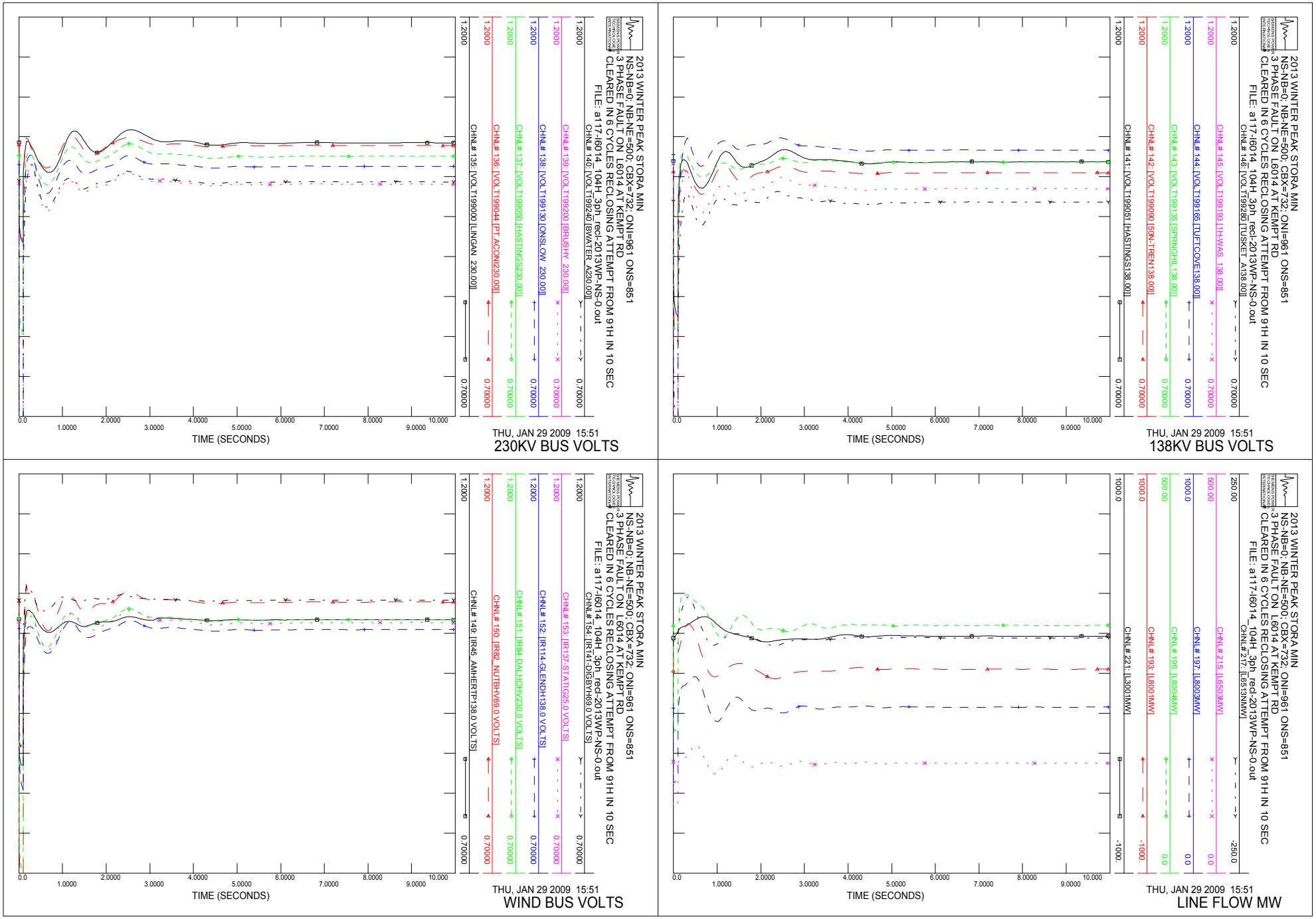
2013 WINTER PEAK STORA MIN
NS-NB=0; NB-NE=500; CBX=732; ONI=961 ONS=851
3 PHASE FAULT ON L6014 AT KEMPT RD
CLEARED IN 6 CYCLES RECLOSING ATTEMPT FROM 91H IN 10 SEC
FILE: a117-l6014_104H_3ph_recl-2013WP-NS-0.out
CHNL# 146: [VOLT199280 [TUSKET_A138.00]]
CHNL# 145: [VOLT199193 [HHWAS_138.00]]
CHNL# 144: [VOLT199166 [TUFTCOVE138.00]]
CHNL# 143: [VOLT199135 [SPRNGHIL138.00]]
CHNL# 142: [VOLT199090 [SON-TREN138.00]]
CHNL# 141: [VOLT199051 [HASTINGS138.00]]
1.2000
0.70000
0.0
1.0000
2.0000
3.0000
4.0000
5.0000
6.0000
7.0000
8.0000
9.0000
10.000
TIME (SECONDS)
THU, JAN 29 2009 15:51
138KV BUS VOLTS
2013 WINTER PEAK STORA MIN
NS-NB=0; NB-NE=500; CBX=732; ONI=961 ONS=851
3 PHASE FAULT ON L6014 AT KEMPT RD
CLEARED IN 6 CYCLES RECLOSING ATTEMPT FROM 91H IN 10 SEC
FILE: a117-l6014_104H_3ph_recl-2013WP-NS-0.out
CHNL# 140: [VOLT199240 [BWATER_A230.00]]
CHNL# 139: [VOLT199200 [BRUSHY_230.00]]
CHNL# 138: [VOLT199130 [ONSLOW_230.00]]
CHNL# 137: [VOLT199050 [HASTINGS230.00]]
CHNL# 136: [VOLT199044 [PT.ACON230.00]]
CHNL# 135: [VOLT199000 [LINGAN_230.00]]
1.2000
0.70000
0.0
1.0000
2.0000
3.0000
4.0000
5.0000
6.0000
7.0000
8.0000
9.0000
10.000
TIME (SECONDS)
THU, JAN 29 2009 15:51
230KV BUS VOLTS
2013 WINTER PEAK STORA MIN
NS-NB=0; NB-NE=500; CBX=732; ONI=961 ONS=851
3 PHASE FAULT ON L6014 AT KEMPT RD
CLEARED IN 6 CYCLES RECLOSING ATTEMPT FROM 91H IN 10 SEC
FILE: a117-l6014_104H_3ph_recl-2013WP-NS-0.out
CHNL# 217: [L6513NWV]
CHNL# 215: [L6503MVI]
CHNL# 197: [L8003MVI]
CHNL# 195: [L8004MVI]
CHNL# 193: [L8001MVI]
CHNL# 221: [L3001MVI]
250.00
-250.0
500.00
0.0
1000.0
-1000.
0.0
1.0000
2.0000
3.0000
4.0000
5.0000
6.0000
7.0000
8.0000
9.0000
10.000
TIME (SECONDS)
THU, JAN 29 2009 15:51
LINE FLOW MW
2013 WINTER PEAK STORA MIN
NS-NB=0; NB-NE=500; CBX=732; ONI=961 ONS=851
3 PHASE FAULT ON L6014 AT KEMPT RD
CLEARED IN 6 CYCLES RECLOSING ATTEMPT FROM 91H IN 10 SEC
FILE: a117-l6014_104H_3ph_recl-2013WP-NS-0.out
CHNL# 154: [IR141-DIGBYH69.0 VOLTS]
CHNL# 153: [IR137-STATIG25.0 VOLTS]
CHNL# 152: [IR114-GLENDH138.0 VOLTS]
CHNL# 151: [IR84-DALHOHV230.0 VOLTS]
CHNL# 150: [IR82_NUTBHV69.0 VOLTS]
CHNL# 149: [IR45_AMHERTP138.0 VOLTS]
1.2000
0.70000
0.0
1.0000
2.0000
3.0000
4.0000
5.0000
6.0000
7.0000
8.0000
9.0000
10.000
TIME (SECONDS)
THU, JAN 29 2009 15:51
WIND BUS VOLTS

Figure 40a DCT Loss of L7008+L7009

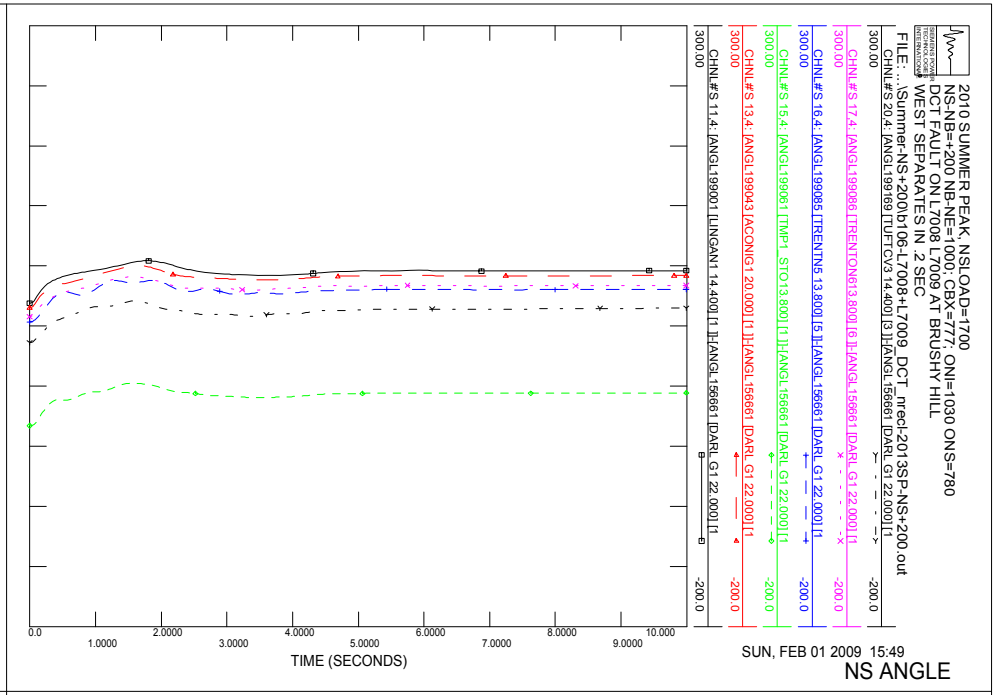

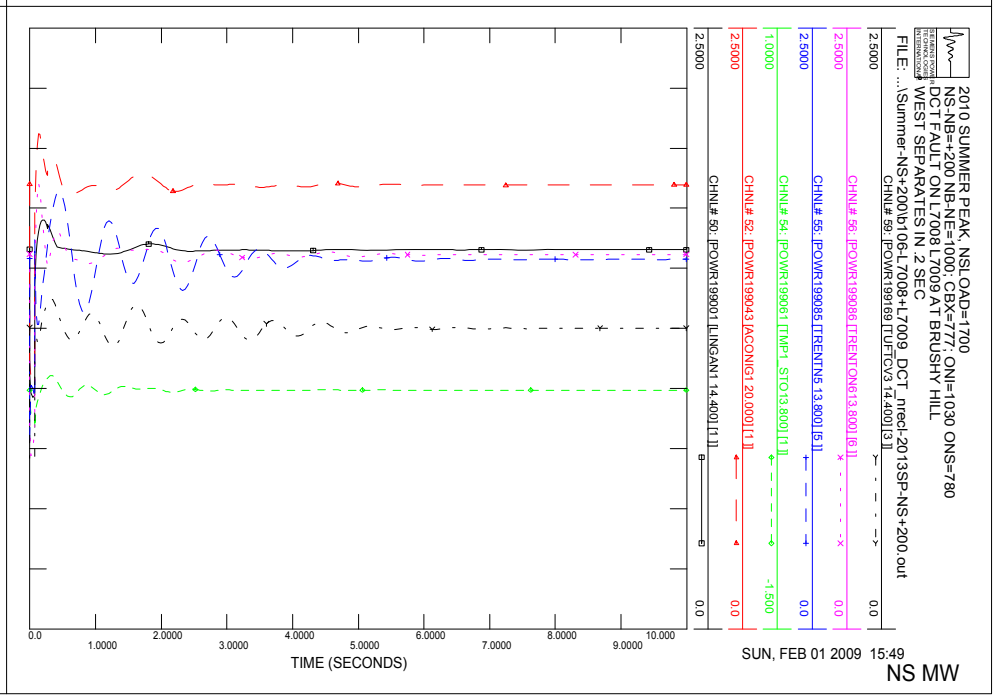

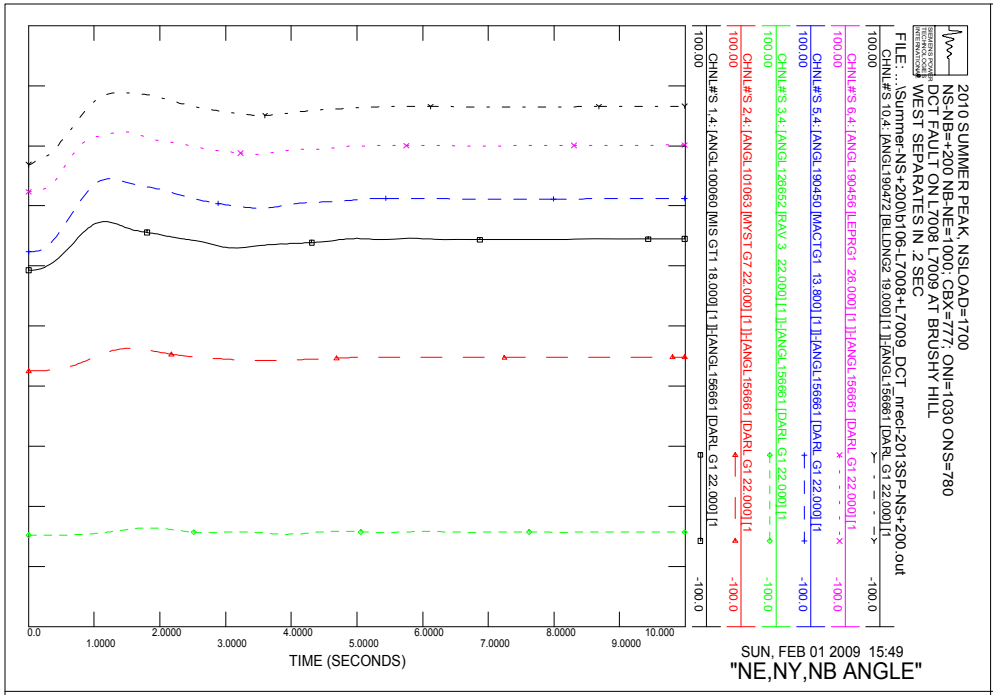

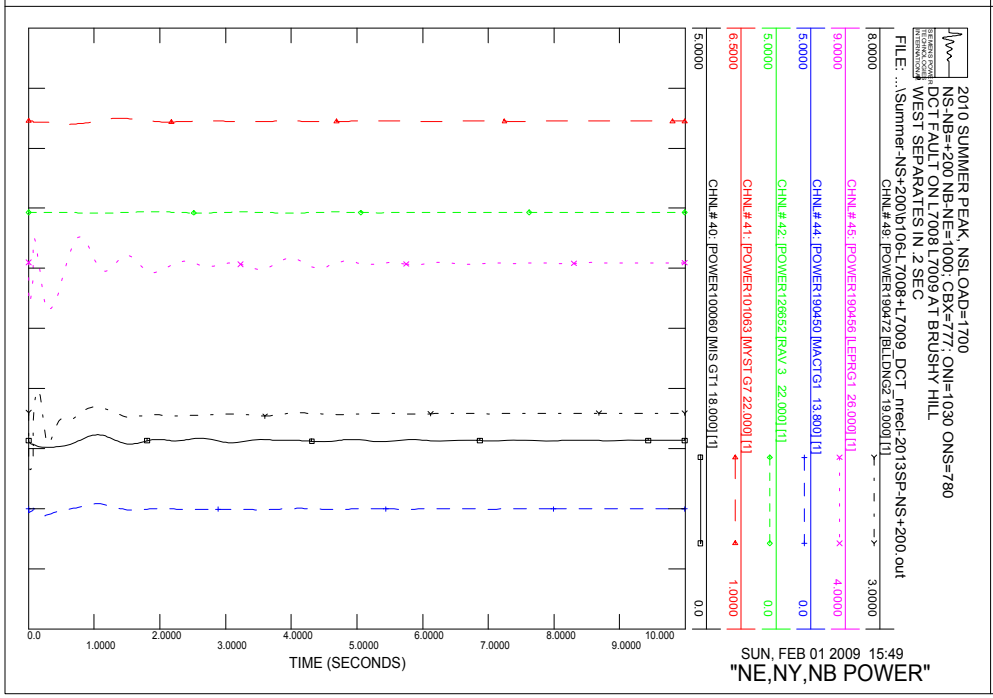

Figure 40b Loss of DCT L7008/L7009

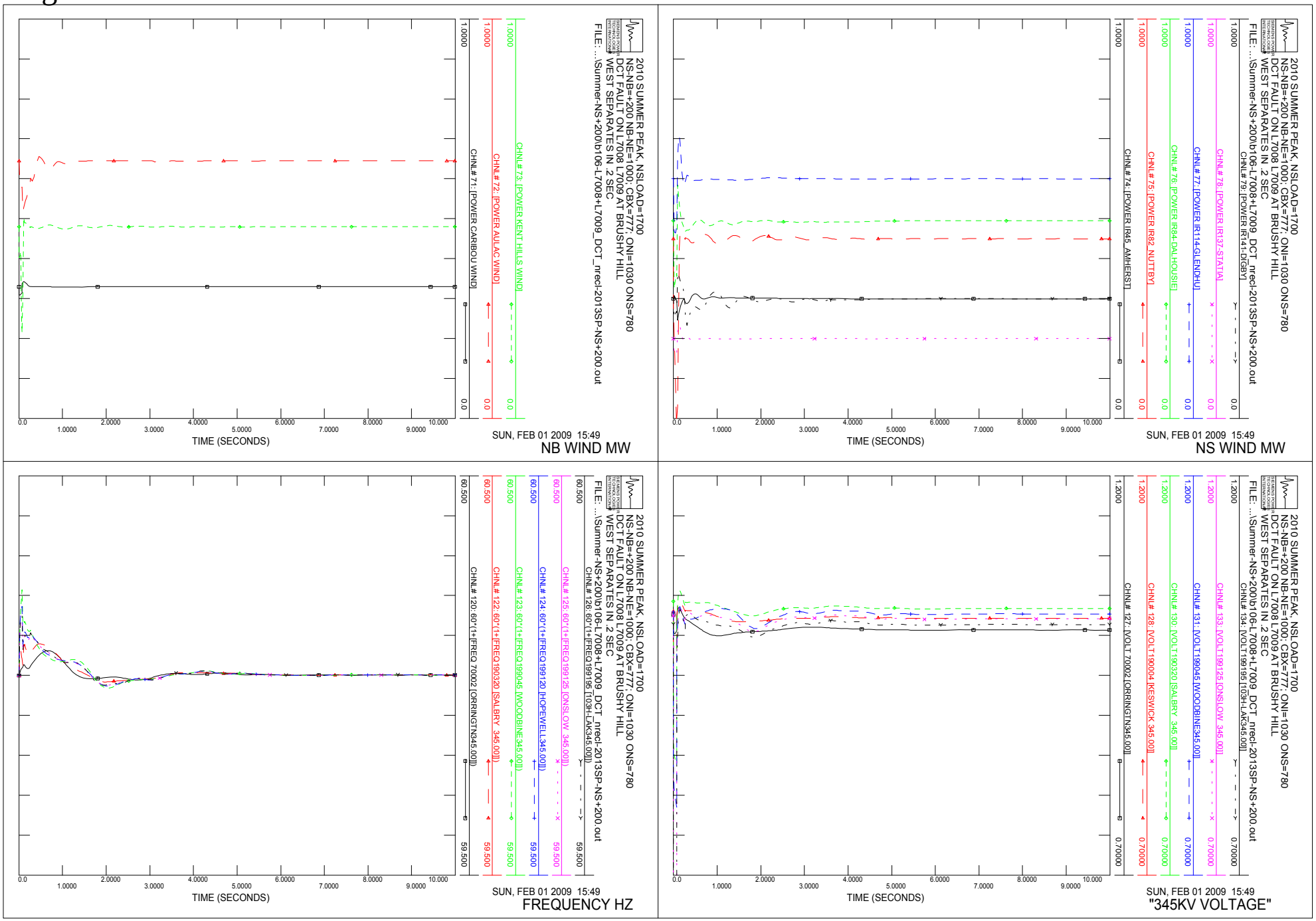

Figure 40c DCT Loss of L7008 + L7009

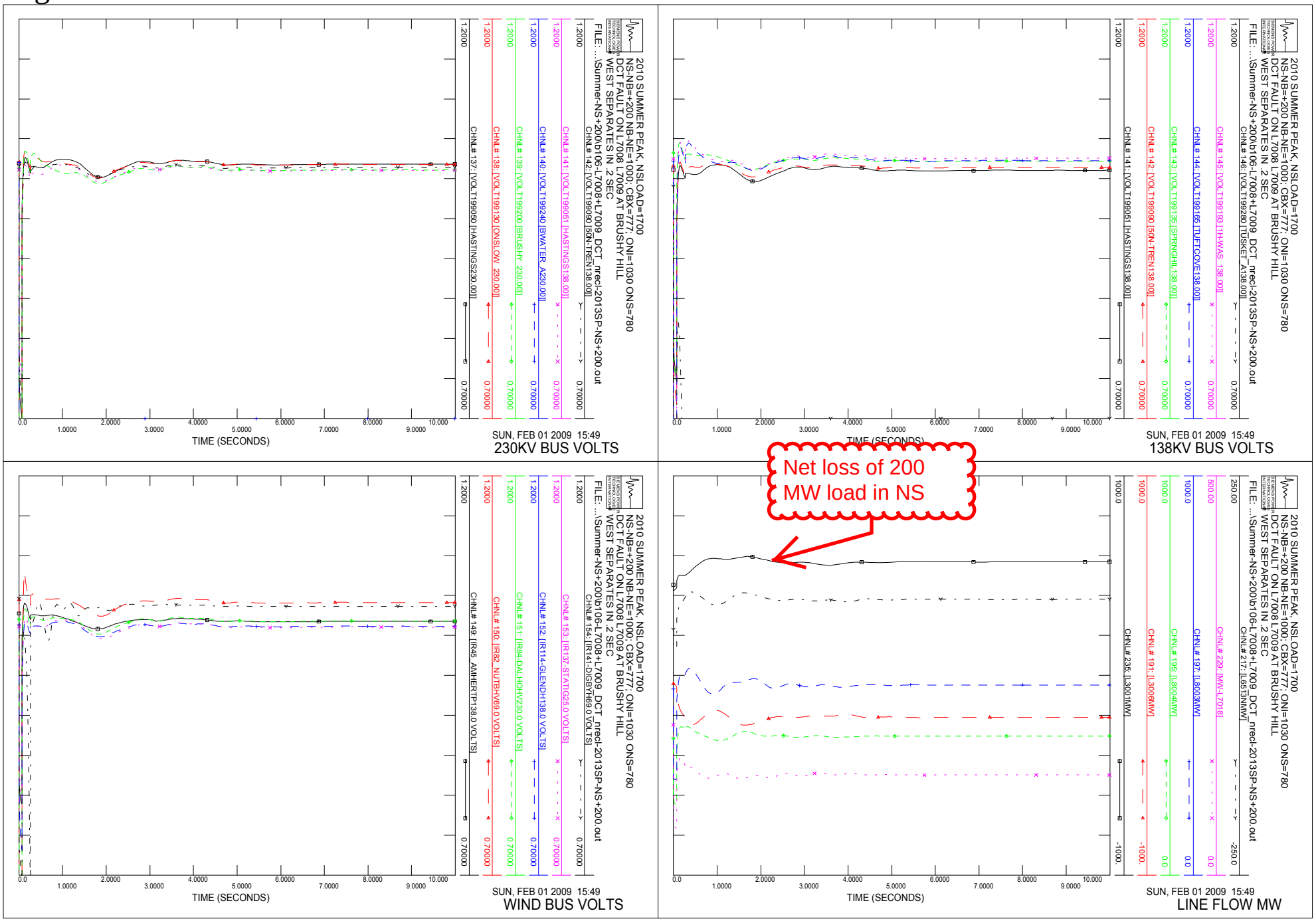

Figure 41 DCT Strait Crossing L8004 L7005

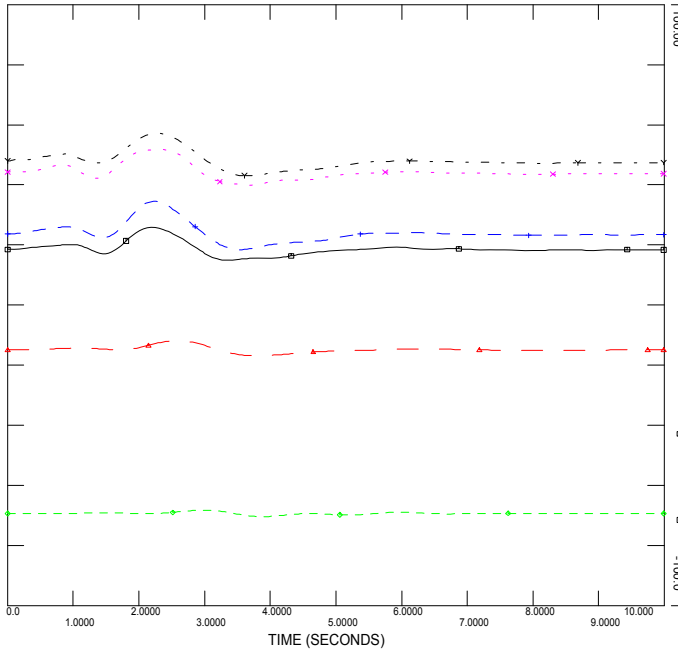

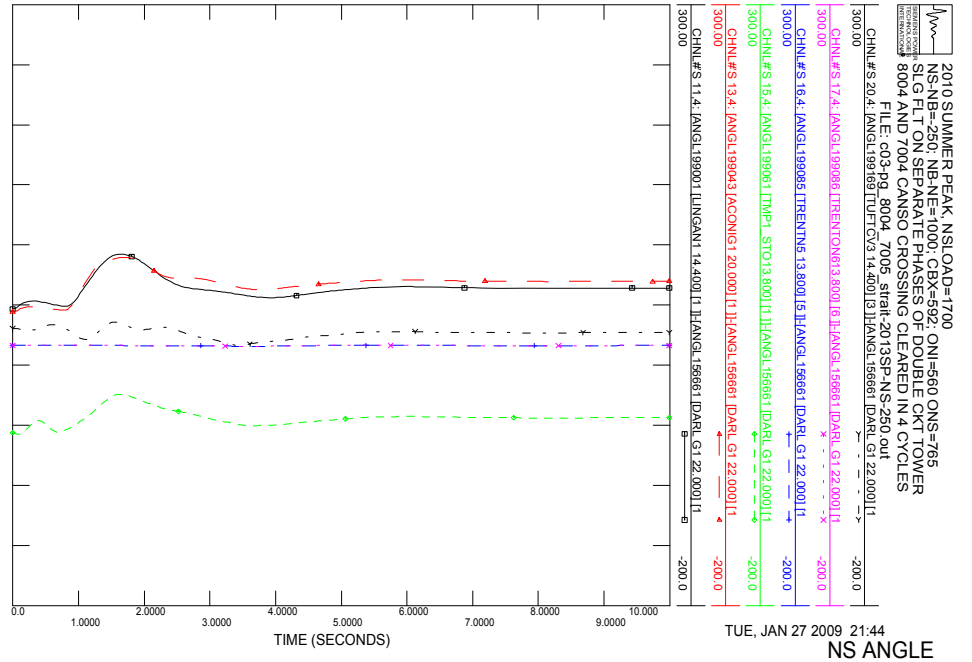

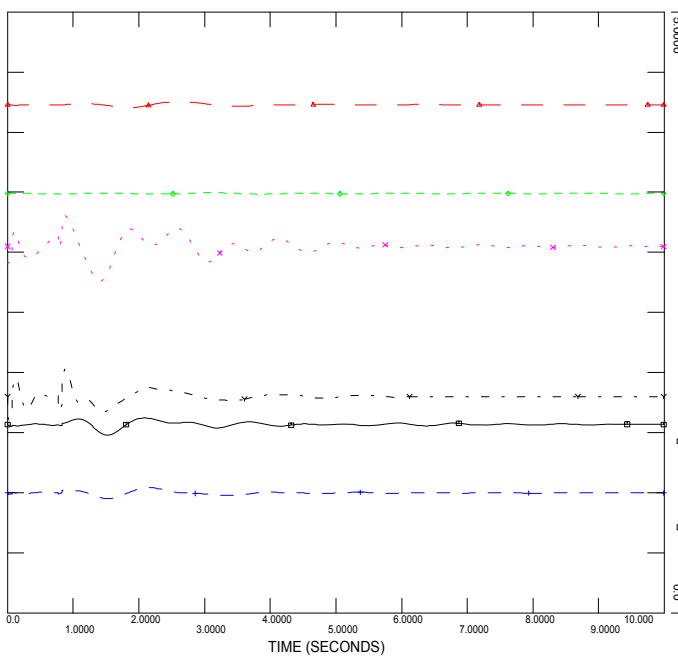

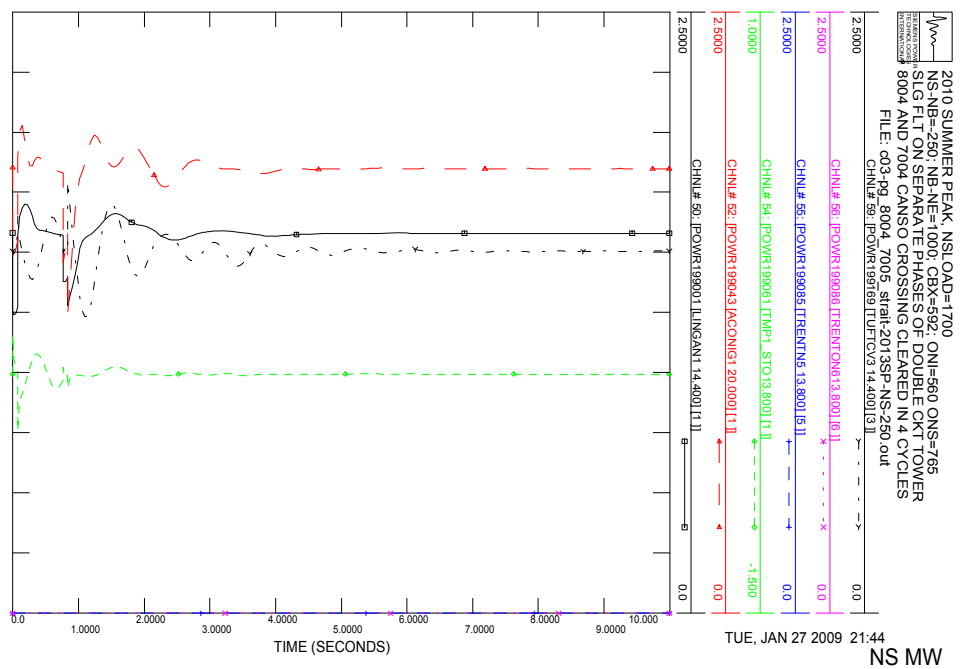

Figure 42 DCT Strait Crossing SPS operation max flow

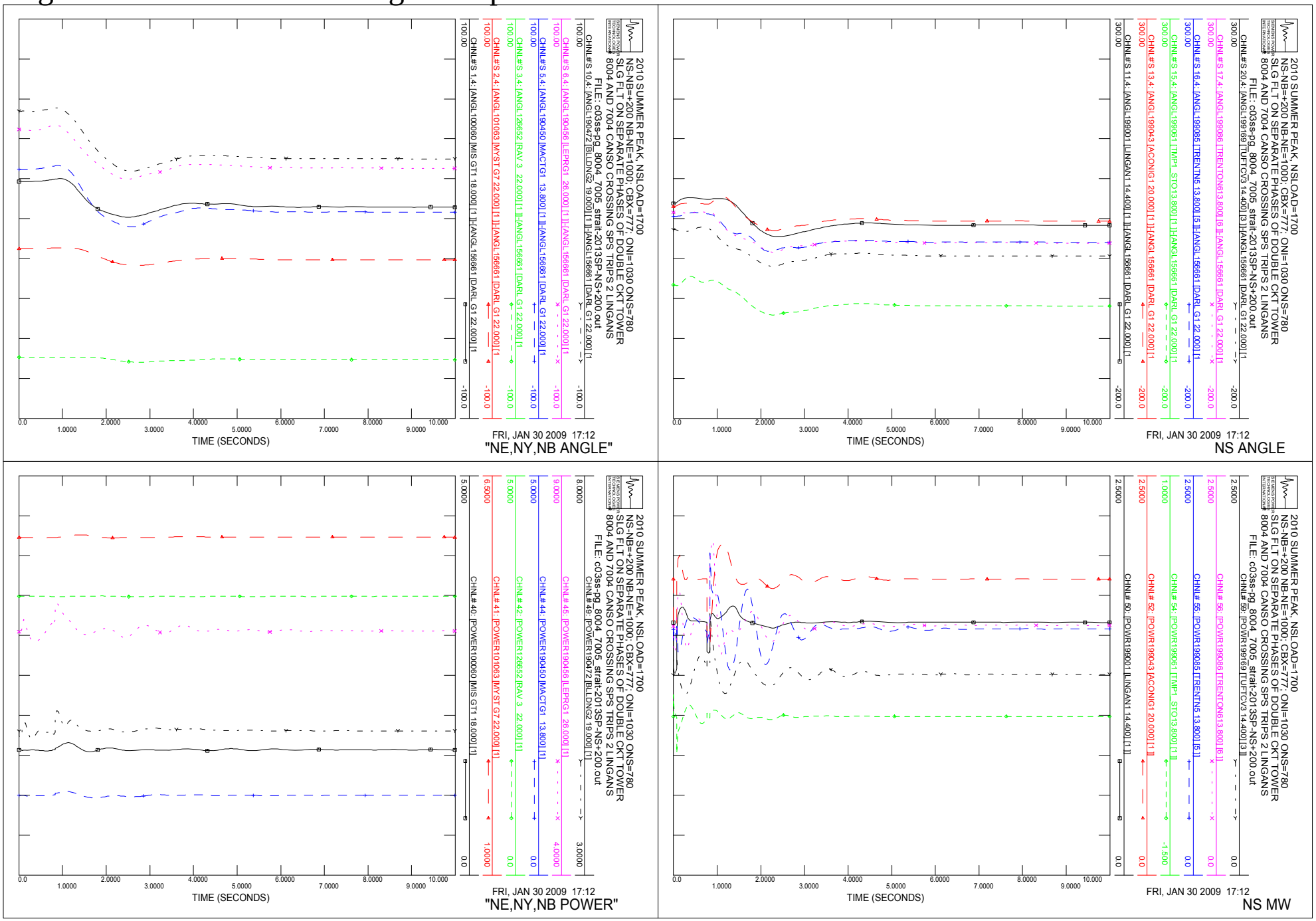

Figure 43a - Breaker Failure at Onslow 345kV with SPS

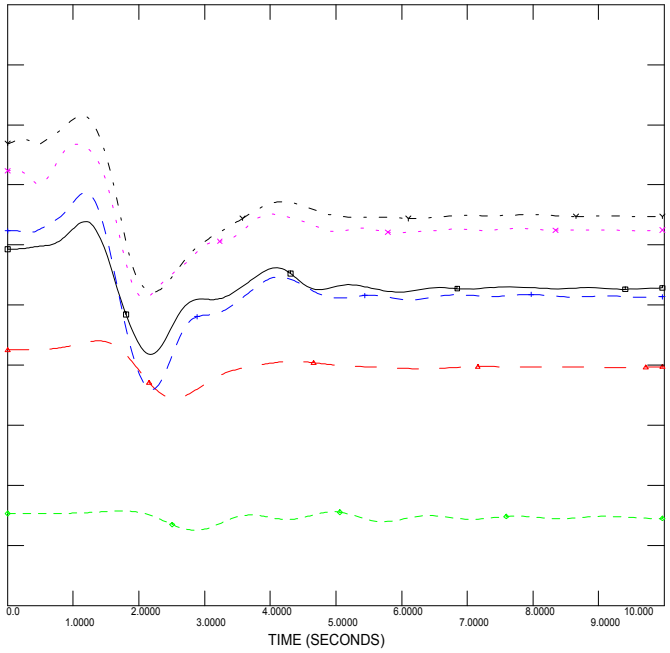

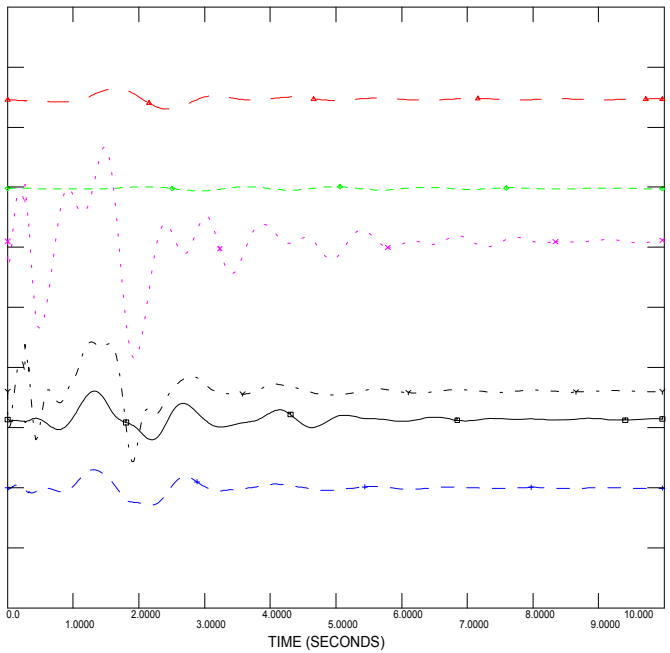

Figure 43b - Breaker Failure at Onslow 345kV with SPS

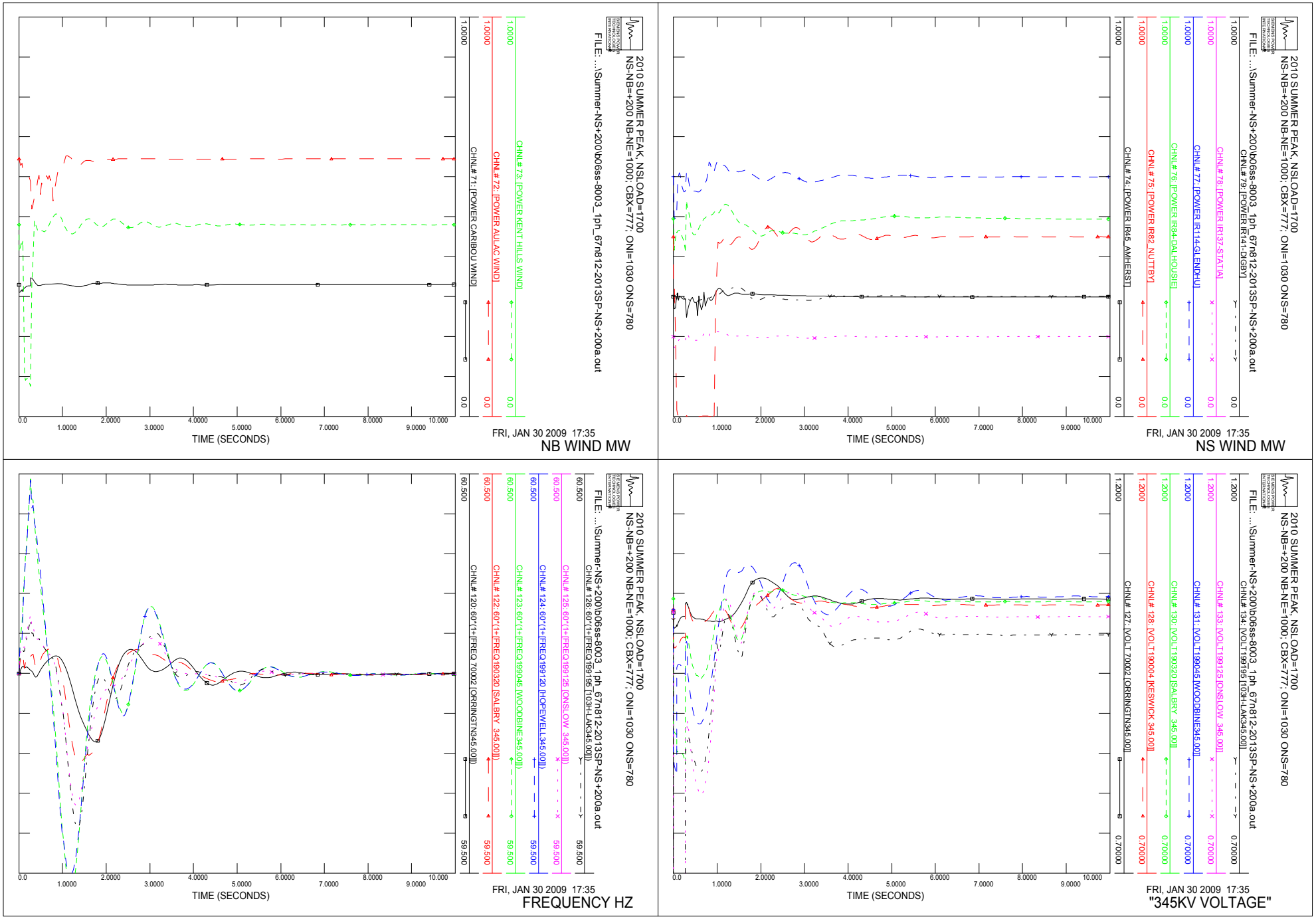

Figure 43c - Breaker Failure at Onslow 345kV with SPS

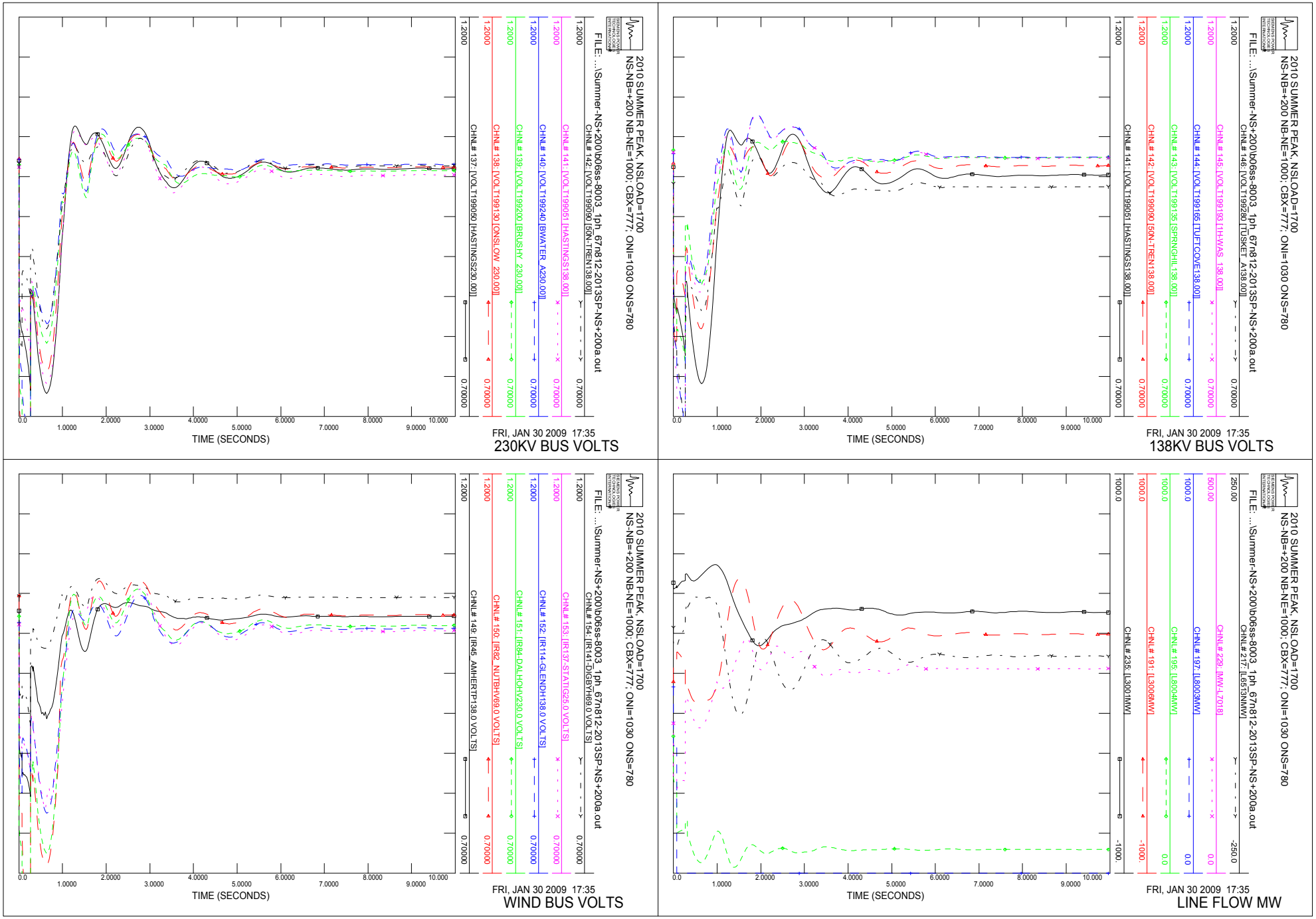

NSX -0.8 MW
CBX 809.9 MW
ONI 1000.7 MW
ONS 853.4 MW

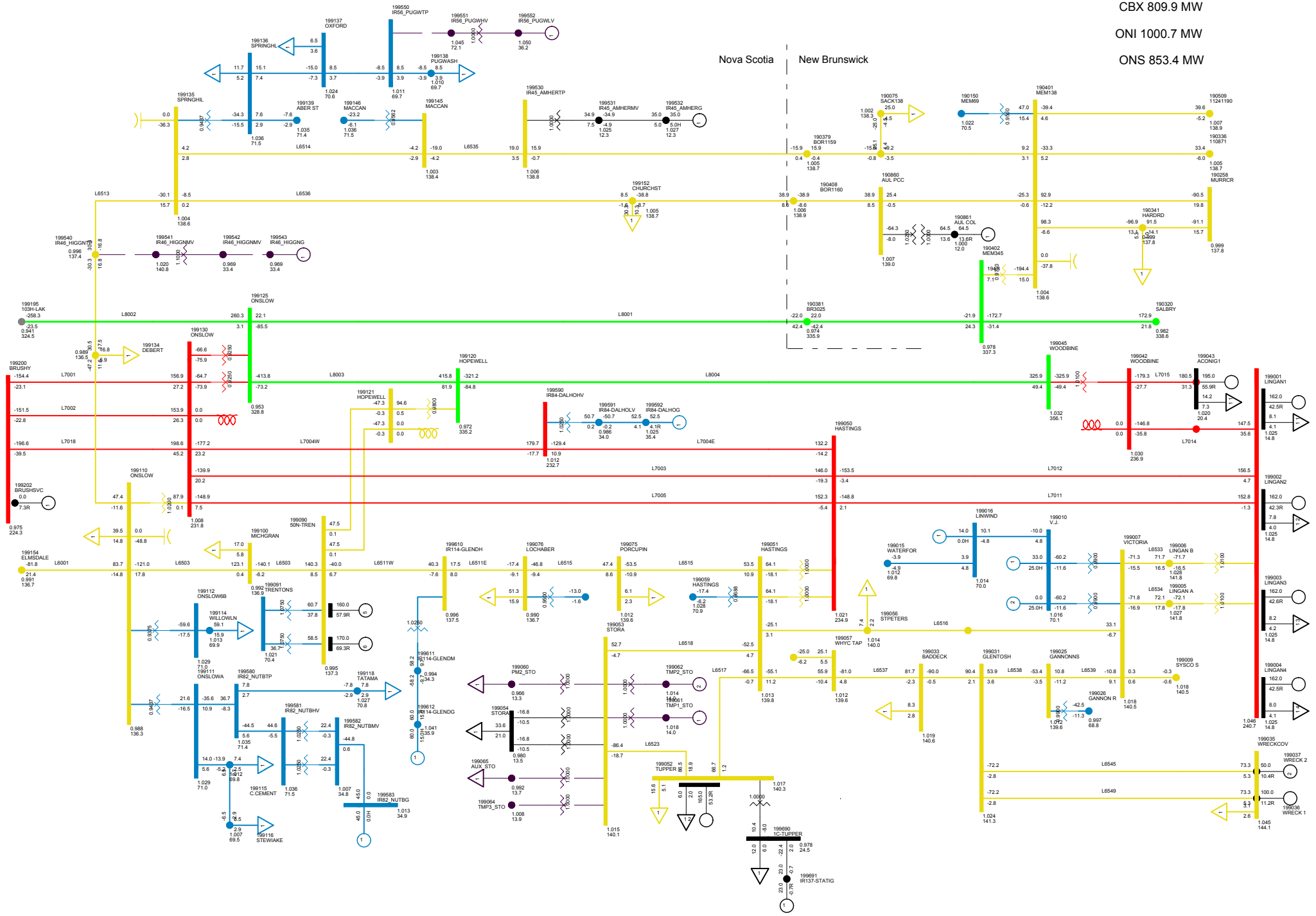

2013 EXTREME PEAK NS=2560; INDUSTRIAL MINIMUM
NS-NB=0; NB-NE=500; CBX=732; ONI=926 ONS=778
NORTHEASTERN NS TUE, FEB 10 2009 14:40

Total Wind Gen: 290.1 MW	Gross Tupper 165.0 MW	Gross Wreck Cove 150.0 MW	Net Stora Load 33.7 MW
Gross Lingan 648.0 MW	Gross Trenton 330.0 MW	Gross Gas Turbine 183.0 MW	Total BMPC Load 9.5 MW
Gross Pt Aconi 195.0 MW	Gross Tuft's Cove 485.7 MW	Gross Small Hydro 182.4 MW	

Bus - VOLTAGE (KV/PU)
Branch - MW/MVAR
Equipment - MW/MVAR

110.0%RATEB
1.050OV 0.950UV
KV: <=25.000 <=69.000 <=138.000 <=230.000 <=345.000 >345.000

Figure 44A

Total Wind Gen: 290.1 MW | Gross Tupper 165.0 MW | Gross Wreck Cove 150.0 MW

Gross Lingan 648.0 MW | Gross Trenton 330.0 MW | Gross Gas Turbine 183.0 MW

Gross Pt Aconi 195.0 MW | Gross Tuft's Cove 487.5 MW | Gross Small Hydro 182.4 MW

Net Stora Load 33.7 MW | Total BMPC Load 9.5 MW

NSX 0.1 MW

CBX 809.8 MW

ONI 1000.5 MW

ONS 852.1 MW

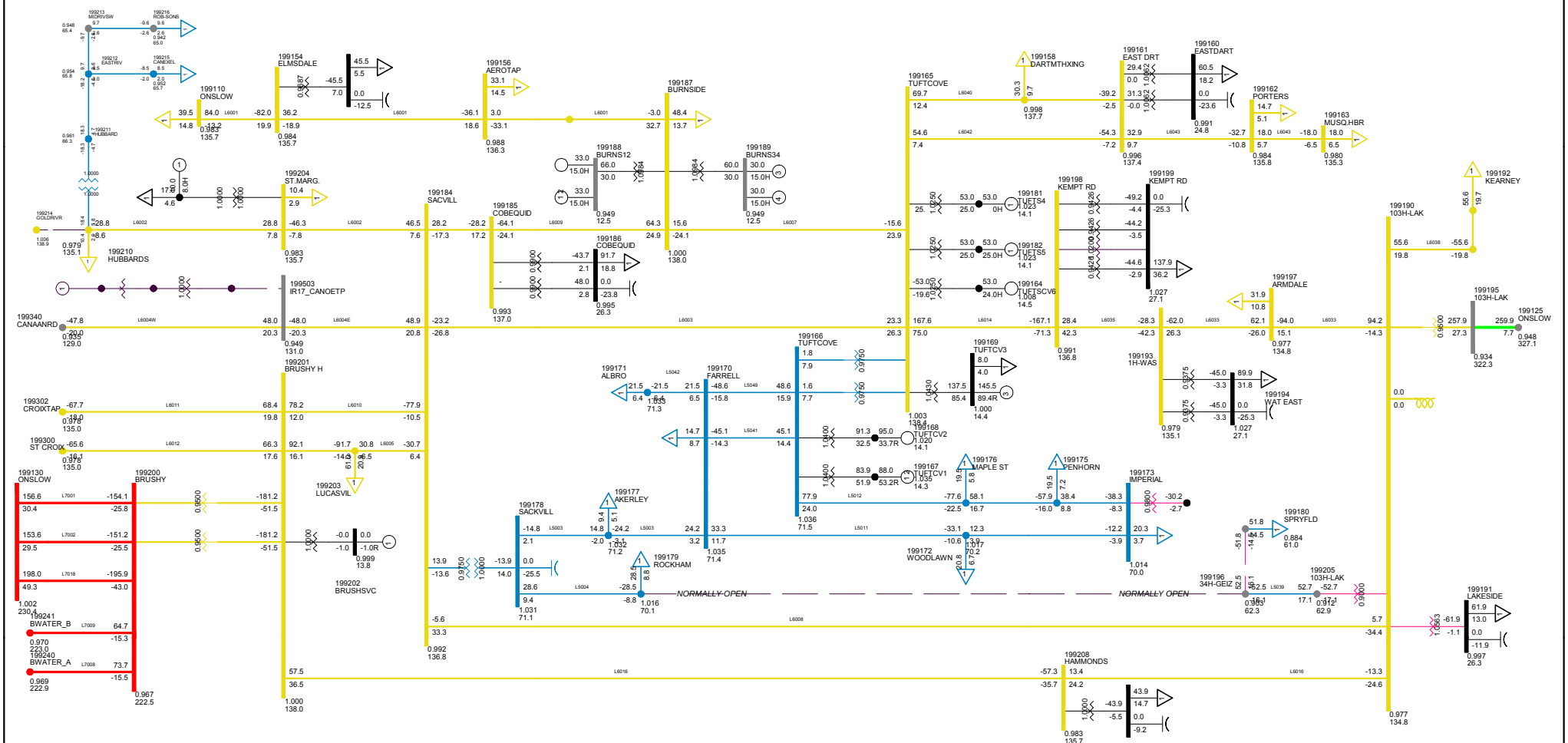

2013 EXTREME PEAK NS=2560; INDUSTRIAL MINIMUM
NS-NB=0; NB-NE=500; CBX=732; ONI=926 ONS=778
METRO ZONE TUE, FEB 10 2009 15:08

Bus - VOLTAGE (KV/PU)
Branch - MW/MVAR
Equipment - MW/MVAR
100.0%RATEB
1.050OV 0.950UV
KV: <=30.000 <=69.000 <=138.000 <=230.000 <=345.000 >345.000

Figure 44B

NSX 0.6 MW

CBX 810.8 MW

ONI 1002.7 MW

ONS 854.0 MW

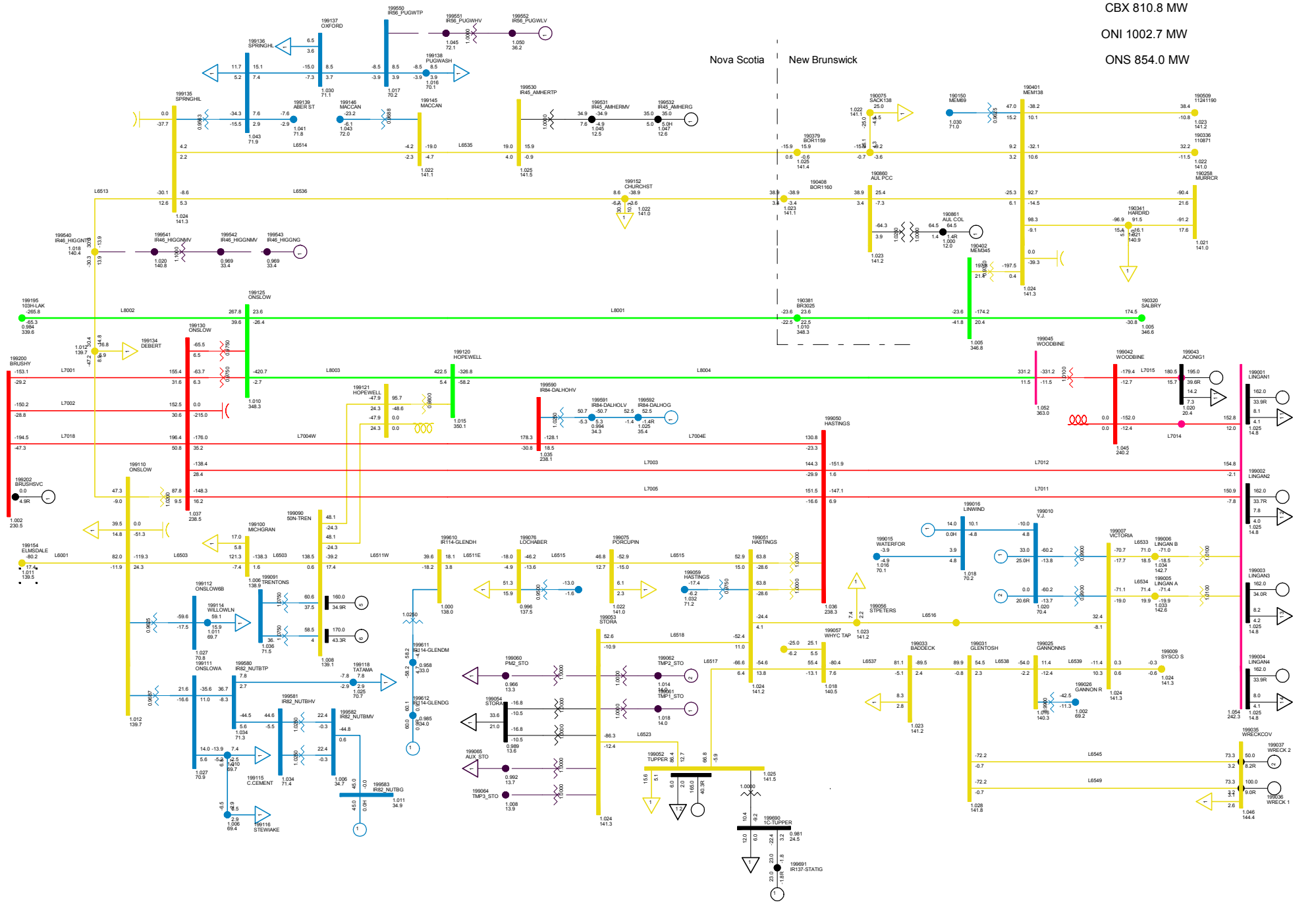

2013 EXTREME PEAK NS=2560; INDUSTRIAL MINIMUM
NS-NB=0; NB-NE=500; CBX=732; ONI=926 ONS=778
200 Mvar cap bank at Onslow TUE, FEB 10 2009 16:00

Total Wind Gen: 290.1 MW | Gross Tupper 165.0 MW | Gross Wreck Cove 150.0 MW | Net Stora Load 33.7 MW
Gross Lingan 648.0 MW | Gross Trenton 330.0 MW | Gross Gas Turbine 183.0 MW | Total BMPC Load 9.5 MW
Gross Pt Aconi 195.0 MW | Gross Tuft's Cove 483.5 MW | Gross Small Hydro 182.4 MW

Bus - VOLTAGE (KV/PU)
Branch - MW/MVAR
Equipment - MW/MVAR
110.0%RATEB
1.050OV 0.950UV
KV: <=25.000 <=69.000 <=138.000 <=230.000 <=345.000 >345.000

Figure 45

NSX -315.4 MW

CBX 511.9 MW

ONI 702.2 MW

ONS 869.2 MW

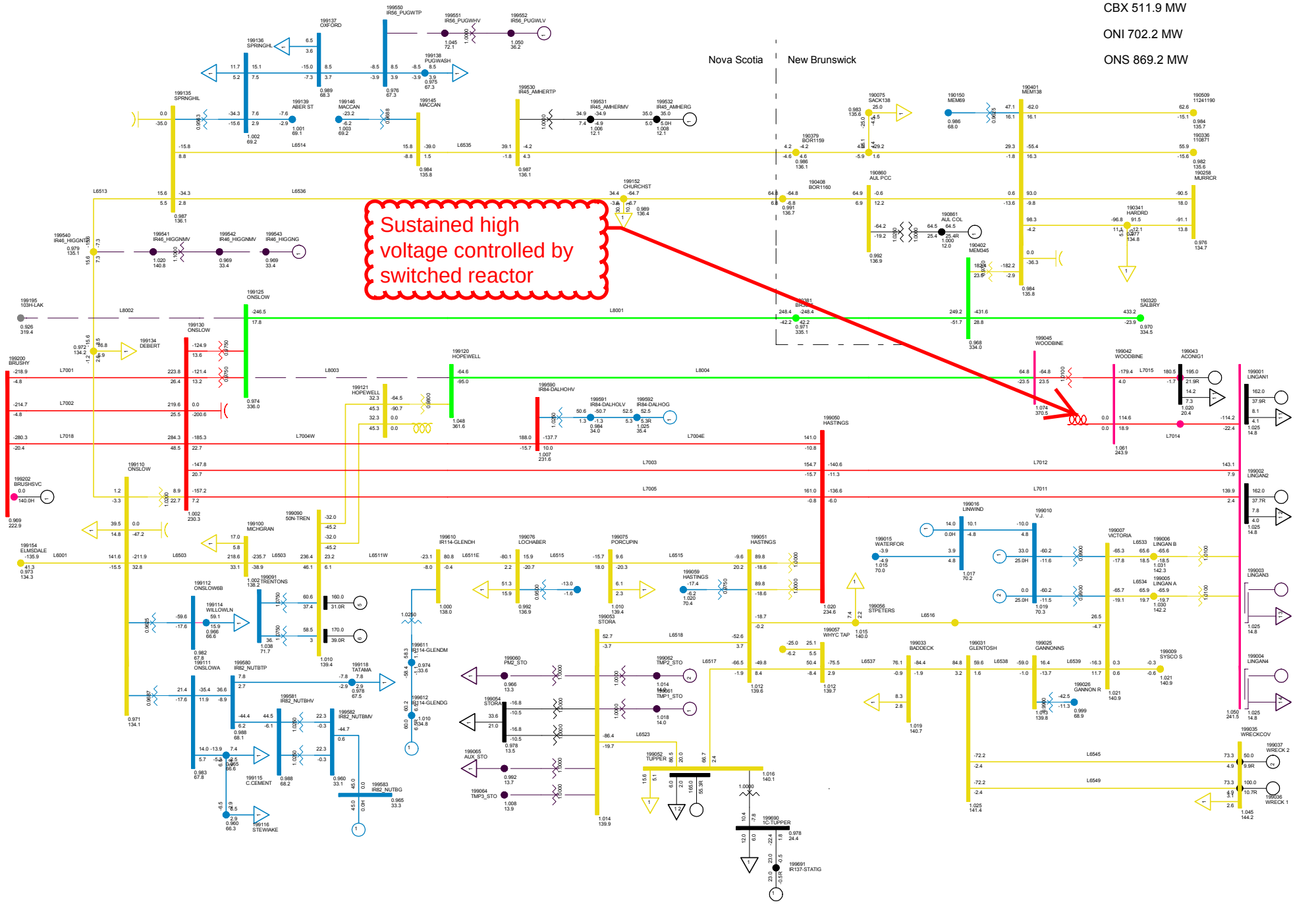

BBU ON 67N-812 LOSE L8002 L8003
NS-NB=0; NB-NE=500; CBX=732; ONI=926 ONS=778
200 Mvar cap bank at Onslow TUE, FEB 10 2009 16:11

Total Wind Gen: 290.1 MW | Gross Tupper 165.0 MW | Gross Wreck Cove 150.0 MW | Net Stora Load 33.7 MW
Gross Lingan 324.0 MW | Gross Trenton 330.0 MW | Gross Gas Turbine 183.0 MW | Total BMPC Load 9.5 MW
Gross Pt Aconi 195.0 MW | Gross Tuft's Cove 483.5 MW | Gross Small Hydro 182.4 MW

Bus - VOLTAGE (KV/PU)
Branch - MW/MVAR
Equipment - MW/MVAR
110.0%RATEB
1.050OV 0.950UV
KV: <=25.000 <=69.000 <=138.000 <=230.000 <=345.000 >345.000

Figure 46

Total Wind Gen: 105.0 MW | Gross Tupper 165.0 MW | Gross Wreck Cove 0.0 MW

Gross Lingan 598.0 MW | Gross Trenton 156.0 MW | Gross Gas Turbine 0.0 MW

Gross Pt Aconi 0.0 MW | Gross Tuft's Cove 484.1 MW | Gross Small Hydro 42.9 MW

Net Stora Load 178.9 MW | Total BMPC Load 108.5 MW

NSX -3.5 MW

CBX 397.8 MW

ONI 523.2 MW

ONS 477.4 MW

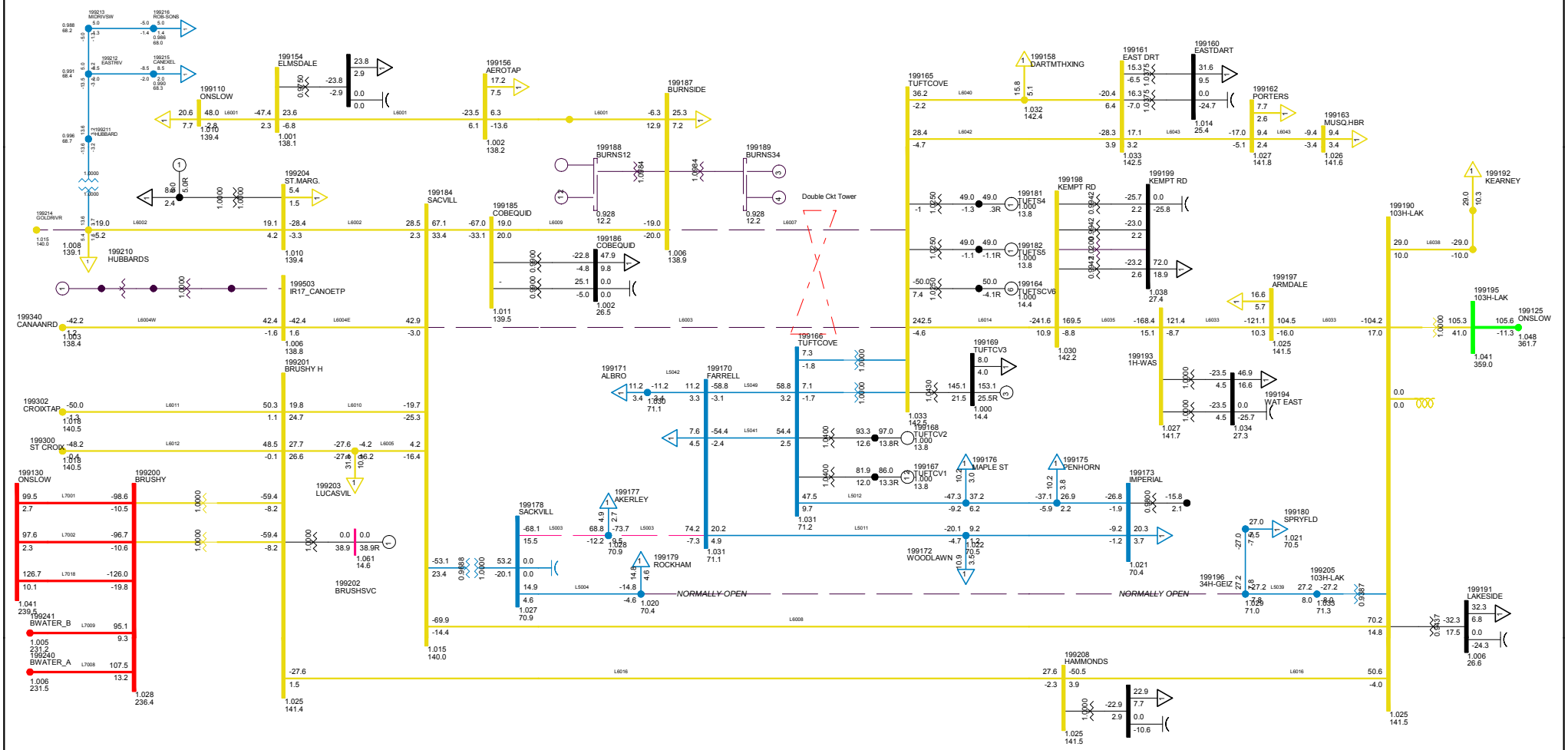

DCT LOSS OF L6003 L6009
ALL TUFTS COVE GENERATION ON-LINE
METRO ZONE TUE, FEB 10 2009 16:57

Bus - VOLTAGE (KV/PU)
Branch - MW/MVAR
Equipment - MW/MVAR
110.0%RATEA
1.050KV/0.950UV
KV: <=30.000 <=69.000 <=138.000 <=230.000 <=345.000 >=345.000

Figure 47

Total Wind Gen: 105.0 MW | Gross Tupper 165.0 MW | Gross Wreck Cove 0.0 MW

Gross Lingan 598.0 MW | Gross Trenton 156.0 MW | Gross Gas Turbine 0.0 MW

Gross Pt Aconi 0.0 MW | Gross Tuft's Cove 484.1 MW | Gross Small Hydro 42.9 MW

Net Stora Load 178.9 MW | Total BMPC Load 108.5 MW

NSX -1.6 MW

CBX 397.8 MW

ONI 523.2 MW

ONS 475.5 MW

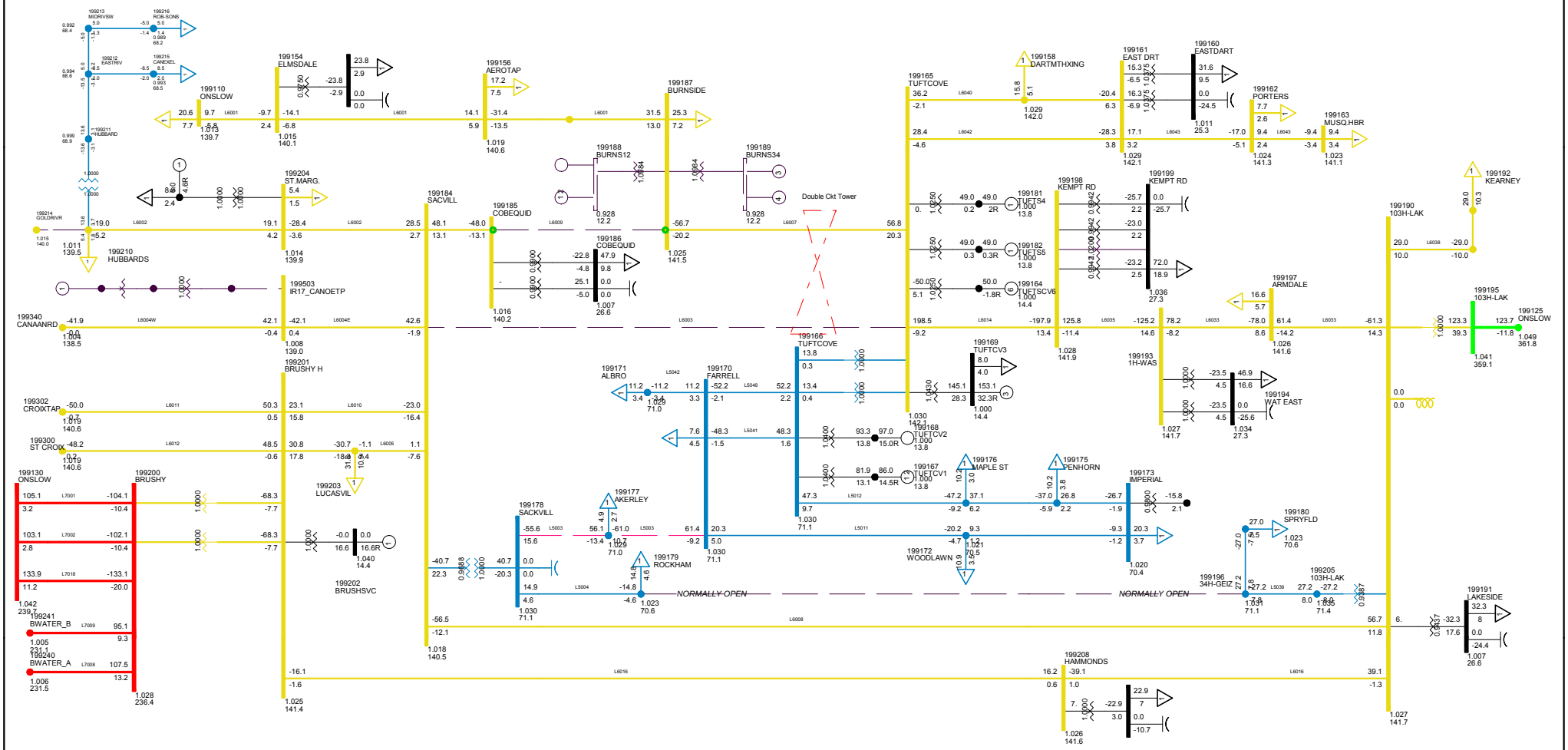

DCT LOSS OF L6003 L6009
ALL TUFTS COVE GENERATION ON-LINE
METRO ZONE TUE, FEB 10 2009 17:00

Bus - VOLTAGE (KV/PU)
Branch - MW/MVAR
Equipment - MW/MVAR
110.0%RATEA
1.050KV/0.950UV
KV: <=30.000 <=69.000 <=138.000 <=230.000 <=345.000 >345.000

Figure 48

Total Wind Gen: 105.0 MW | Gross Tupper 165.0 MW | Gross Wreck Cove 0.0 MW

Gross Lingan 598.0 MW | Gross Trenton 156.0 MW | Gross Gas Turbine 0.0 MW

Gross Pt Aconi 0.0 MW | Gross Tuft's Cove 484.1 MW | Gross Small Hydro 42.9 MW

Net Stora Load 178.9 MW | Total BMPC Load 108.5 MW

NSX -1.6 MW

CBX 397.8 MW

ONI 523.2 MW

ONS 475.5 MW

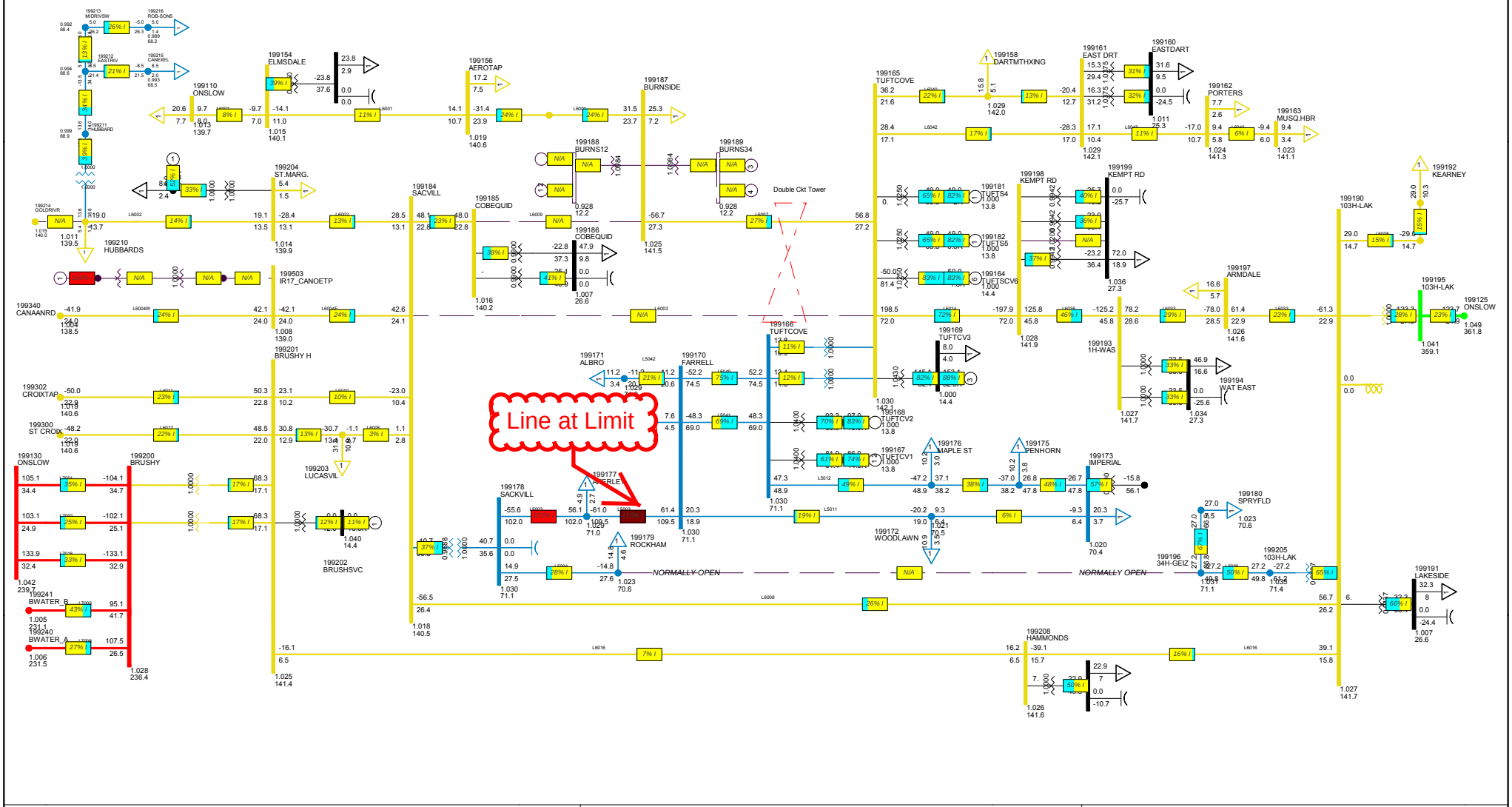

DCT LOSS OF L6003 L6009
ALL TUFTS COVE GENERATION ON-LINE
METRO ZONE TUE, FEB 10 2009 17:13

Bus - VOLTAGE (KV/PU)
Branch - MW/% OF RATE A
Equipment - MW/MVAR
110.0%RATEA
1.050KV 0.950UV
KV: <=30.000 <=69.000 <=138.000 <=230.000 <=345.000 >345.000

Figure 49

Figure 50

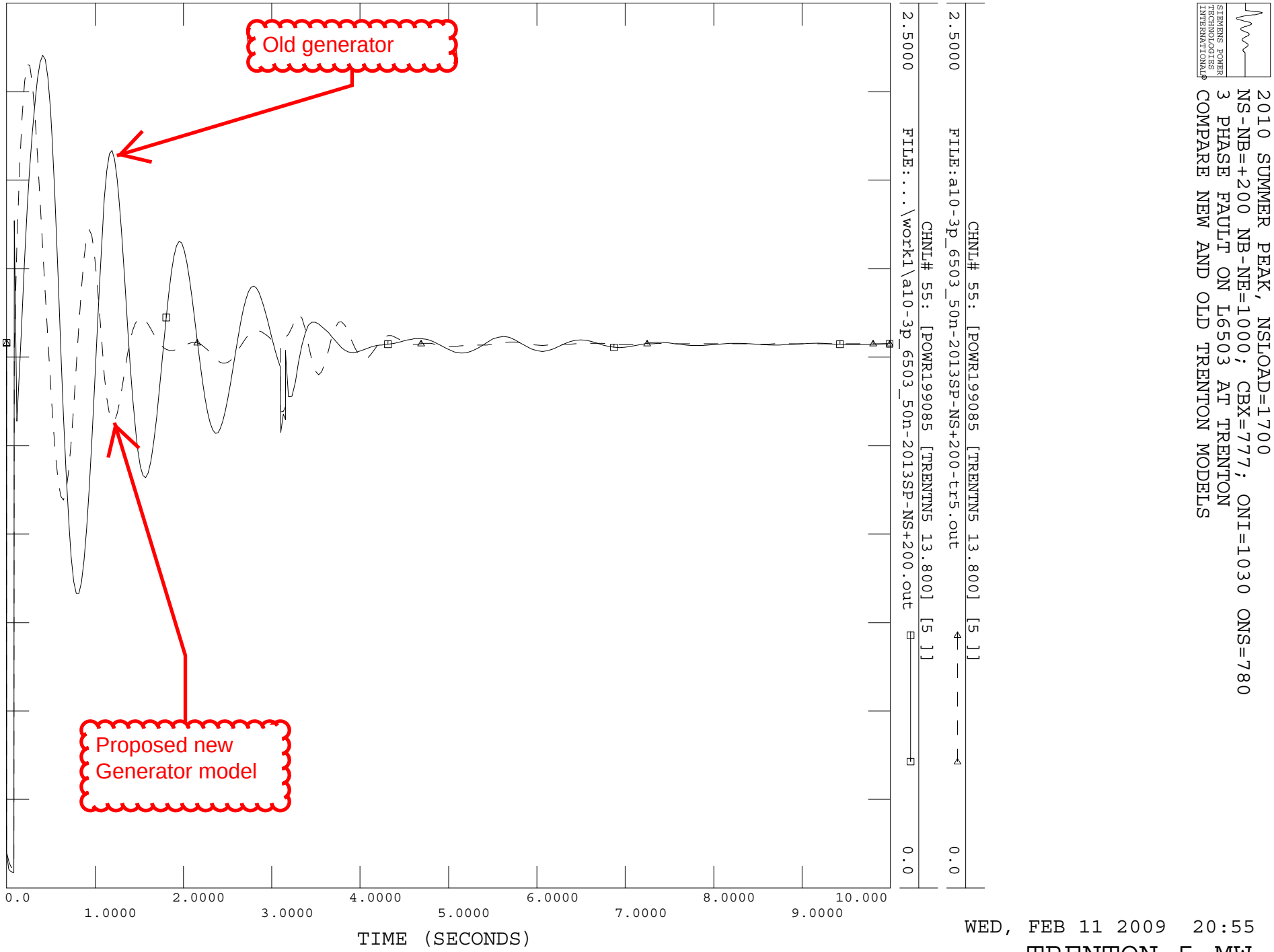
Old generator
Proposed new
Generator model
2010 SUMMER PEAK, NSLOAD=1700
NS-NB=+200 NB-NE=1000; CBX=777; ONI=1030 ONS=780
3 PHASE FAULT ON L6503 AT TRENTON
COMPARE NEW AND OLD TRENTON MODELS
SIEMENS POWER TECHNOLOGIES INTERNATIONAL
CHNL# 55: [POWR199085 [TRENTN5 13.800] [5]]
2.5000 FILE:a10-3p_6503_50n-2013SP-NS+200-tr5.out 0.0
CHNL# 55: [POWR199085 [TRENTN5 13.800] [5]]
2.5000 FILE:...\work1\a10-3p_6503_50n-2013SP-NS+200.out 0.0
0.0
1.0000
2.0000
3.0000
4.0000
5.0000
6.0000
7.0000
8.0000
9.0000
10.000
TIME (SECONDS)
WED, FEB 11 2009 20:55
TRENTON 5 MW

Figure 51

Wind Generation Duration Curve

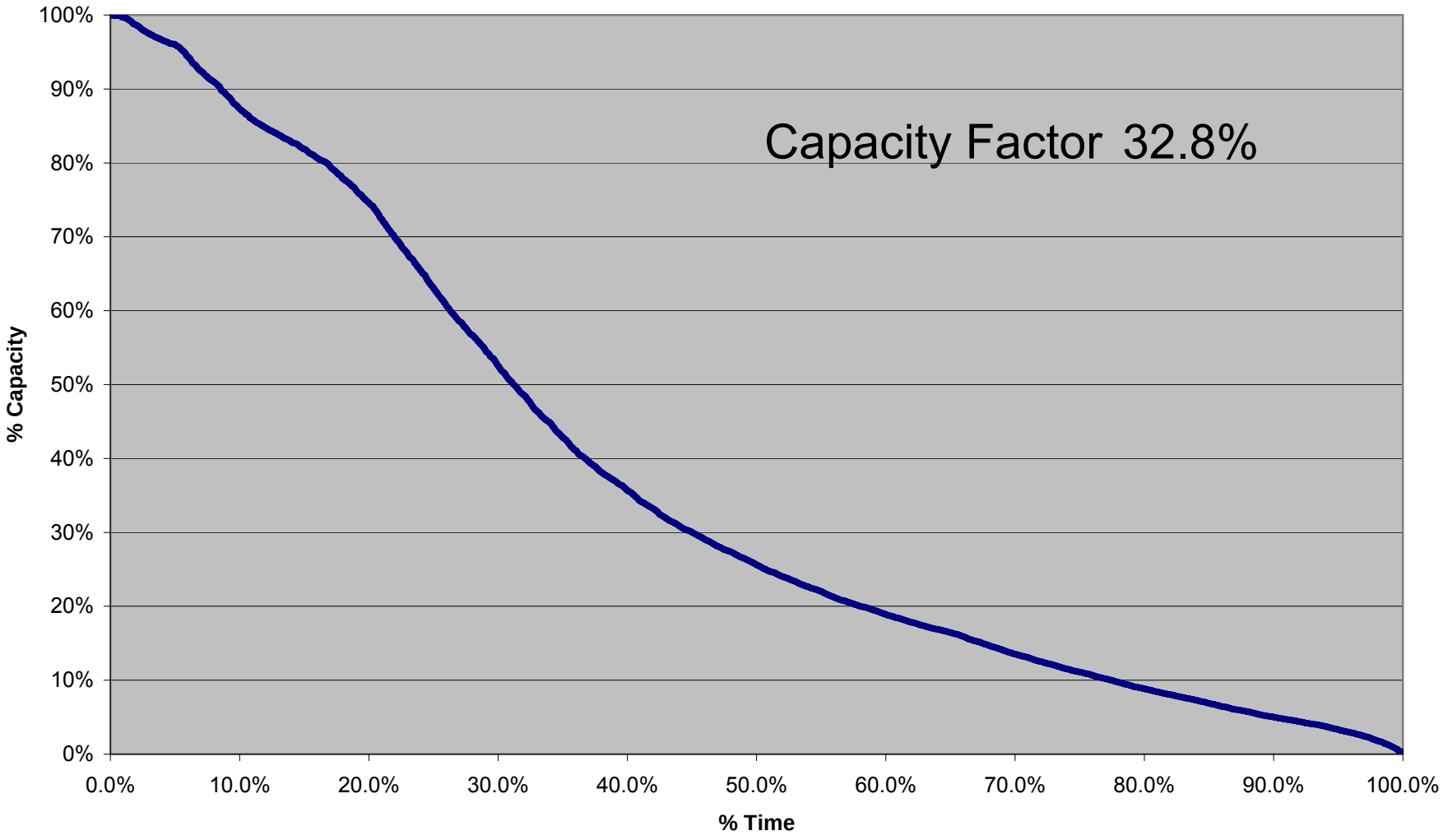

Figure 52

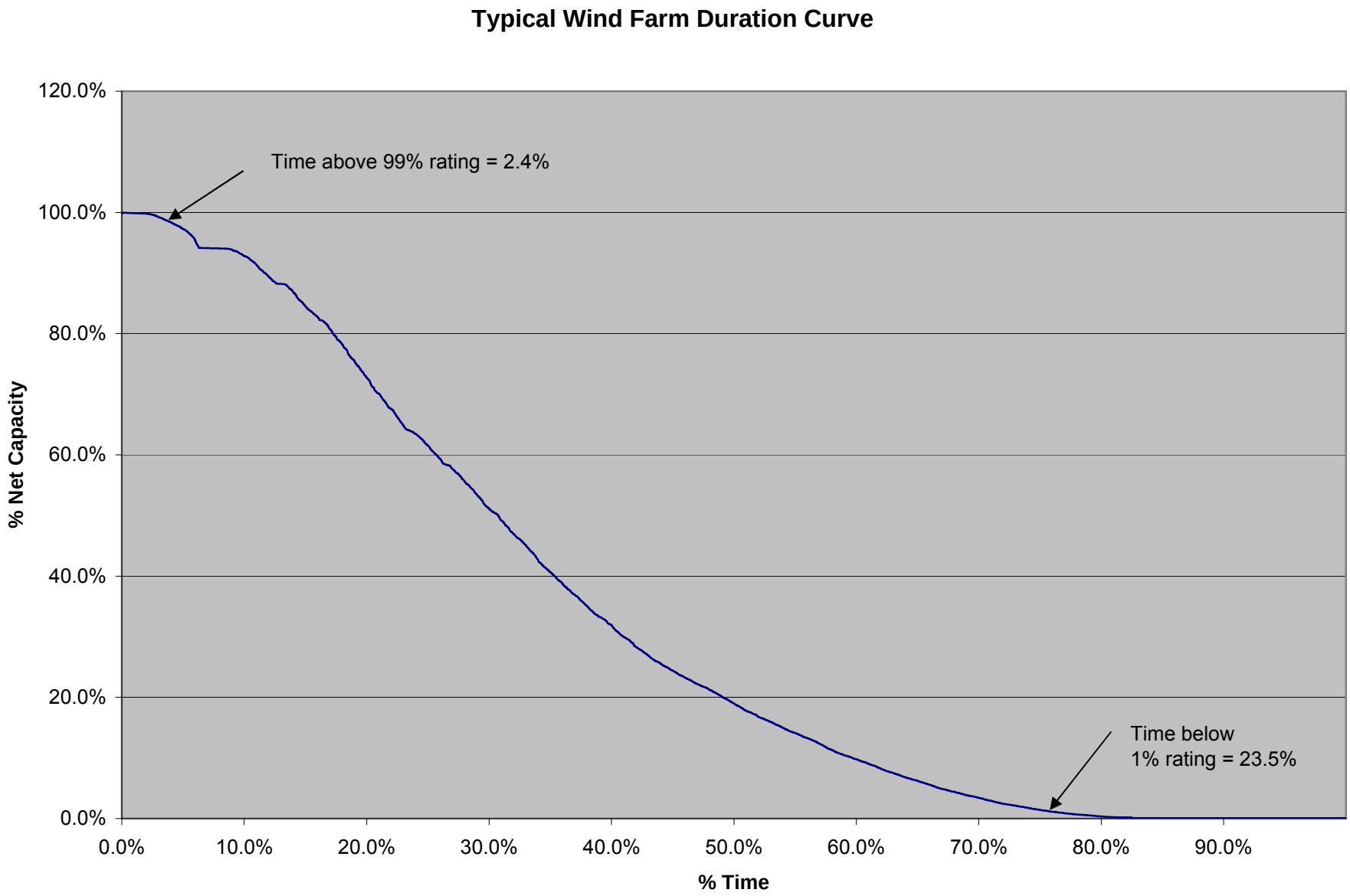
Typical Wind Farm Duration Curve
Time above 99% rating = 2.4%
Time below
1% rating = 23.5%
120.0%
100.0%
80.0%
60.0%
40.0%
20.0%
0.0%
% Net Capacity
0.0%
10.0%
20.0%
30.0%
40.0%
50.0%
60.0%
70.0%
80.0%
90.0%
% Time

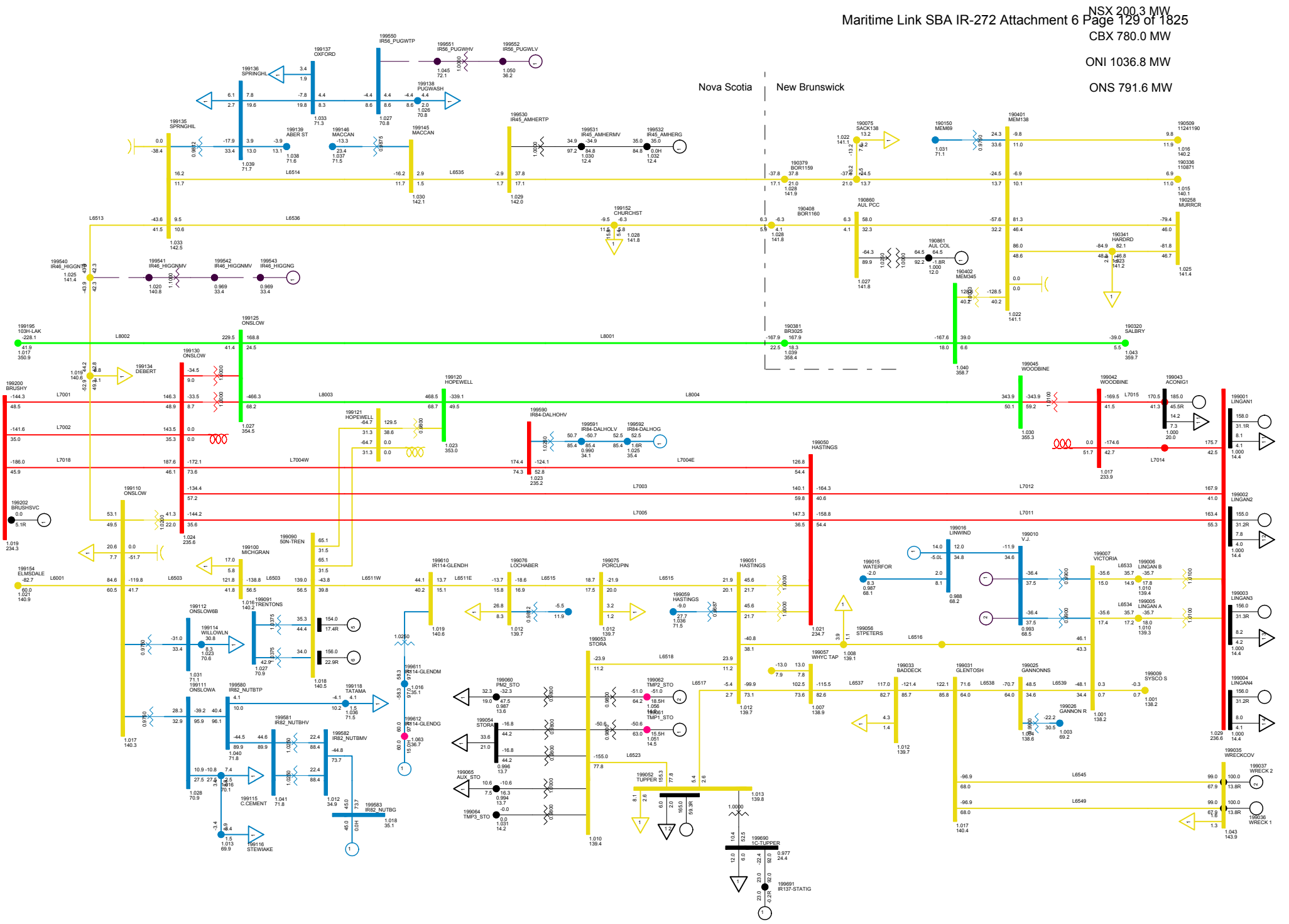

2010 SUMMER PEAK, NSLOAD=1700
NS-NB=+250; NB-NE=1000; CBX=780; ONI=1036 ONS=791
NORTHEASTERN NS THU, FEB 12 2009 18:11

Total Wind Gen: 290.1 MW
Gross Lingan 625.0 MW
Gross Pt Aconi 185.0 MW
Gross Tupper 165.0 MW
Gross Trenton 310.0 MW
Gross Tuft's Cove 133.1 MW
Gross Wreck Cove 200.0 MW
Gross Gas Turbine 0.0 MW
Gross Small Hydro 42.9 MW
Net Stora Load 178.9 MW
Total BMPC Load 108.6 MW

Bus - VOLTAGE (KV/PU)
Branch - MW/% OF RATE A
Equipment - MW/MVAR
110.0%RATEA
1.050OV 0.950UV
KV: <=25.000 <=69.000 <=138.000 <=230.000 <=345.000 >345.000

Figure 53A

Total Wind Gen: 290.1 MW
Gross Tupper 165.0 MW
Gross Wreck Cove 200.0 MW
Gross Lingan 625.0 MW
Gross Trenton 310.0 MW
Gross Gas Turbine 0.0 MW
Gross Pt Aconi 185.0 MW
Gross Tuft's Cove 133.1 MW
Gross Small Hydro 42.9 MW
Net Stora Load 178.9 MW
Total BMPC Load 108.6 MW

NSX 200.3 MW
CBX 780.0 MW
ONI 1036.8 MW
ONS 791.6 MW

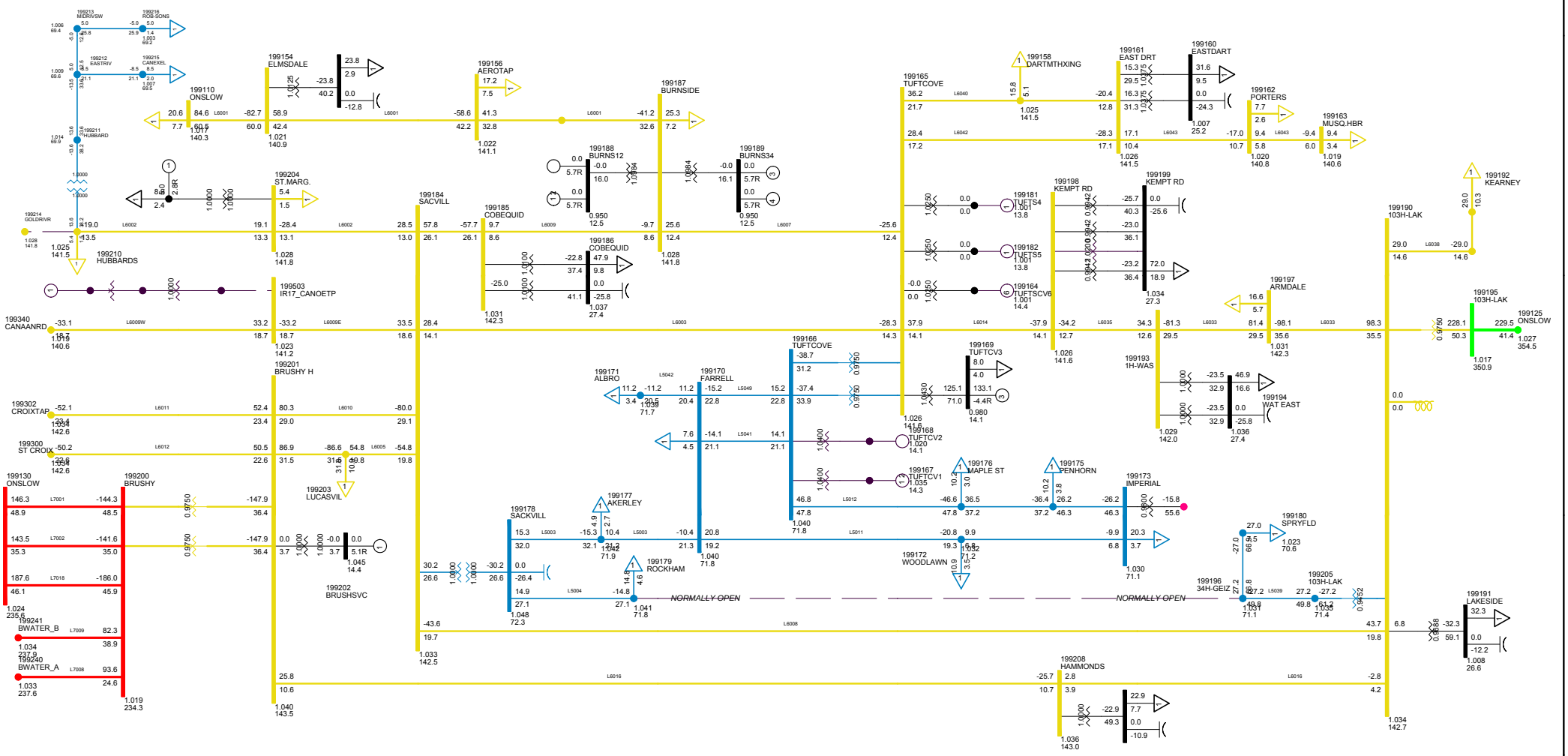

2010 SUMMER PEAK, NSLOAD=1700
NS-NB=+250; NB-NE=1000; CBX=780; ONI=1036 ONS=791
METRO ZONE THU, FEB 12 2009 18:10

Bus - VOLTAGE (KV/PU)
Branch - MW/% OF RATE A
Equipment - MW/MVAR
100.0%RATEA
1.050OV 0.950UV
KV: <=30.000 <=69.000 <=138.000 <=230.000 <=345.000 >345.000

Figure 53B

NSX 205.5 MW

CBX 925.6 MW

ONI 1172.8 MW

ONS 922.3 MW

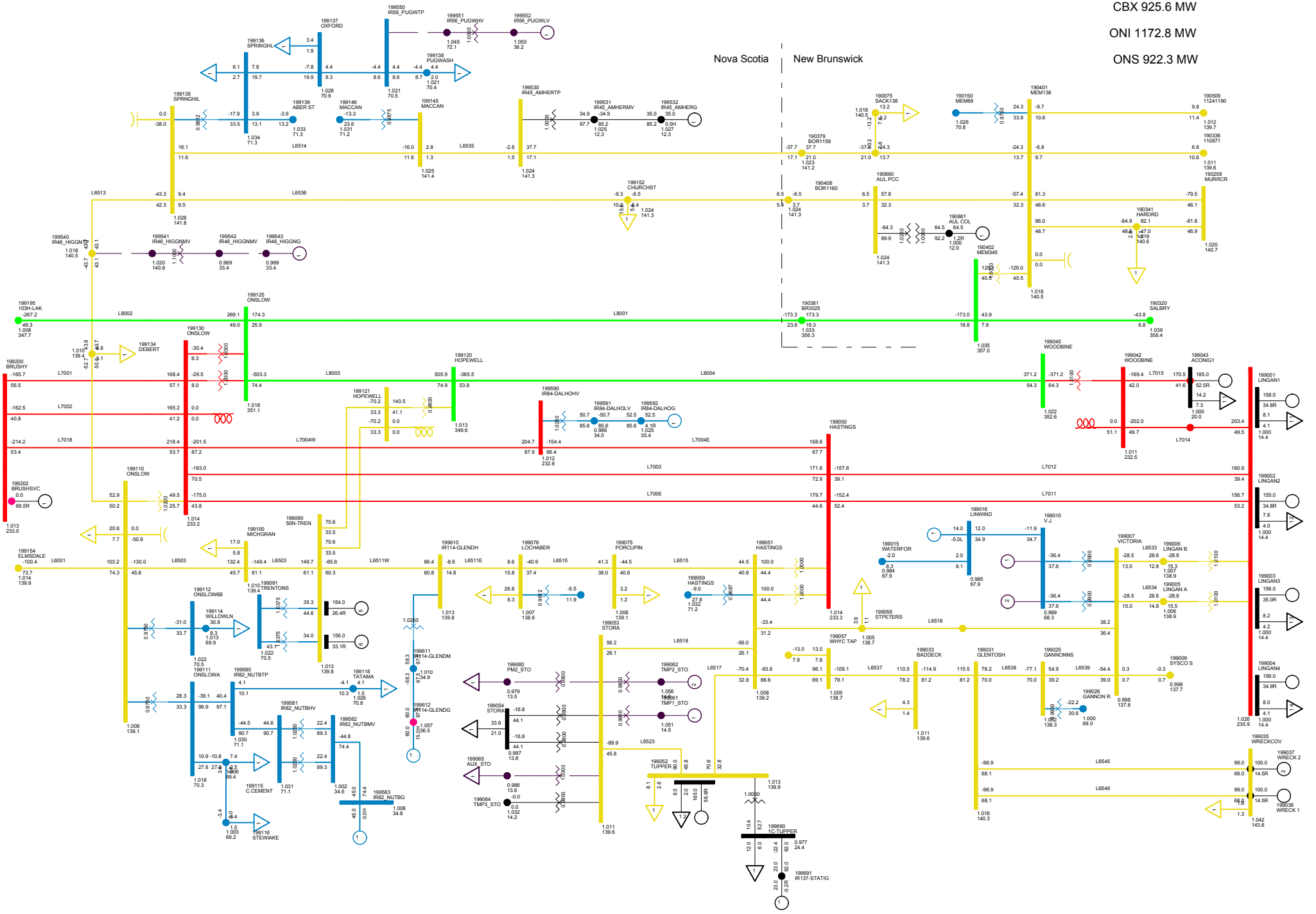

2010 SUMMER PEAK, NSLOAD=1700
NS-NB=+250; NB-NE=1000; CBX=780; ONI=1036 ONS=791
NORTHEASTERN NS THU, FEB 12 2009 18:16

Total Wind Gen: 290.1 MW
Gross Lingan 625.0 MW
Gross Pt Aconi 185.0 MW
Gross Tupper 165.0 MW
Gross Trenton 310.0 MW
Gross Tuft's Cove 0.0 MW
Gross Wreck Cove 200.0 MW
Gross Gas Turbine 0.0 MW
Gross Small Hydro 42.9 MW
Net Stora Load 33.7 MW
Total BMPC Load 108.5 MW

Bus - VOLTAGE (KV/PU)
Branch - MW/% OF RATE A
Equipment - MW/MVAR
110.0%RATEA
1.050OV 0.950UV
KV: <=25.000 <=69.000 <=138.000 <=230.000 <=345.000 >345.000

Figure 54A

Total Wind Gen: 290.1 MW
Gross Tupper 165.0 MW
Gross Wreck Cove 200.0 MW
Gross Lingan 625.0 MW
Gross Trenton 310.0 MW
Gross Gas Turbine 0.0 MW
Gross Pt Aconi 185.0 MW
Gross Tuft's Cove 0.0 MW
Gross Small Hydro 42.9 MW
Net Stora Load 33.7 MW
Total BMPC Load 108.5 MW

NSX 205.5 MW
CBX 925.6 MW
ONI 1172.8 MW
ONS 922.3 MW

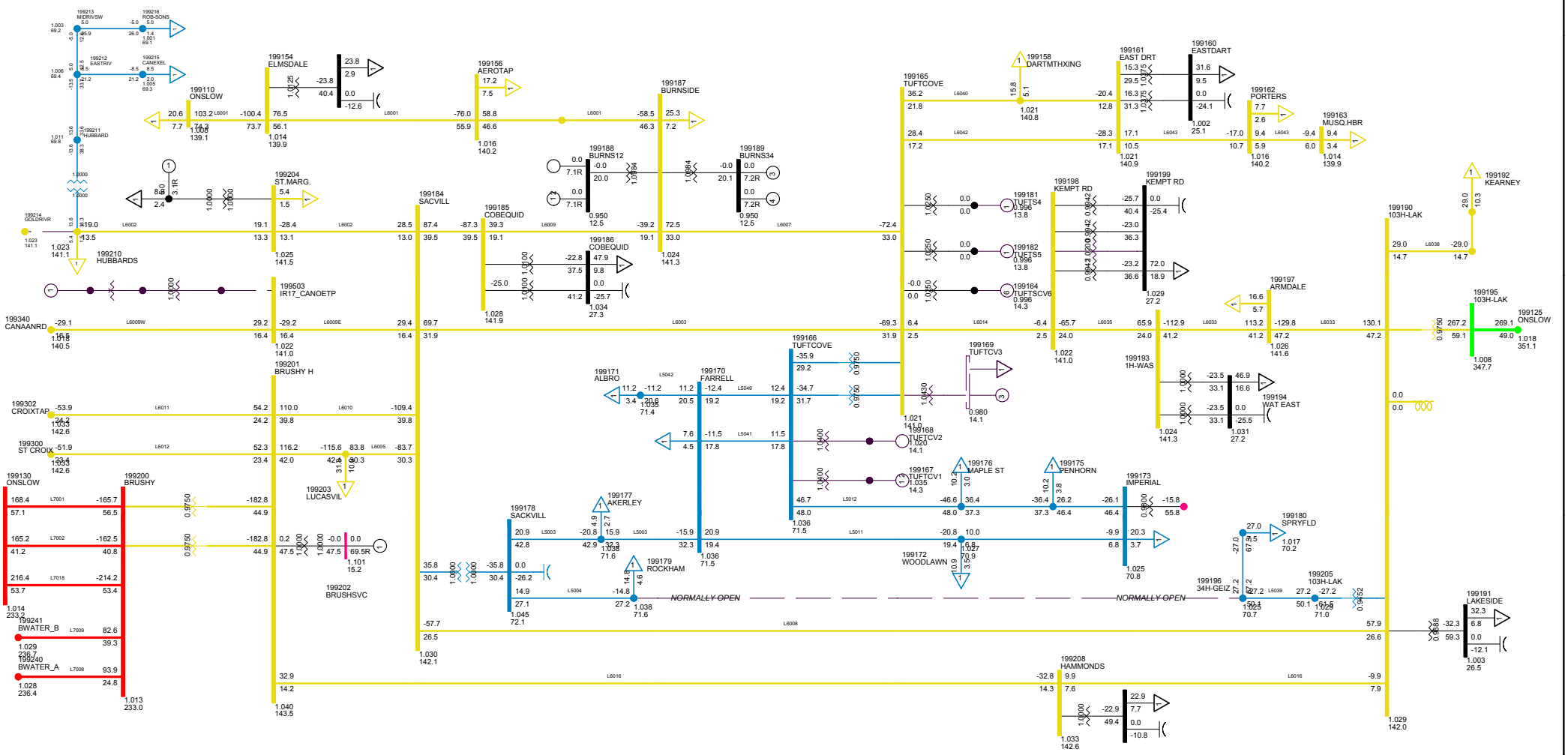

2010 SUMMER PEAK, NSLOAD=1700
NS-NB=+250; NB-NE=1000; CBX=780; ONI=1036 ONS=791
METRO ZONE THU, FEB 12 2009 18:16

Bus - VOLTAGE (KV/PU)
Branch - MW/% OF RATE A
Equipment - MW/MVAR
100.0%RATEA
1.050OV 0.950UV
KV: <=30.000 <=69.000 <=138.000 <=230.000 <=345.000 >345.000

Figure 54B

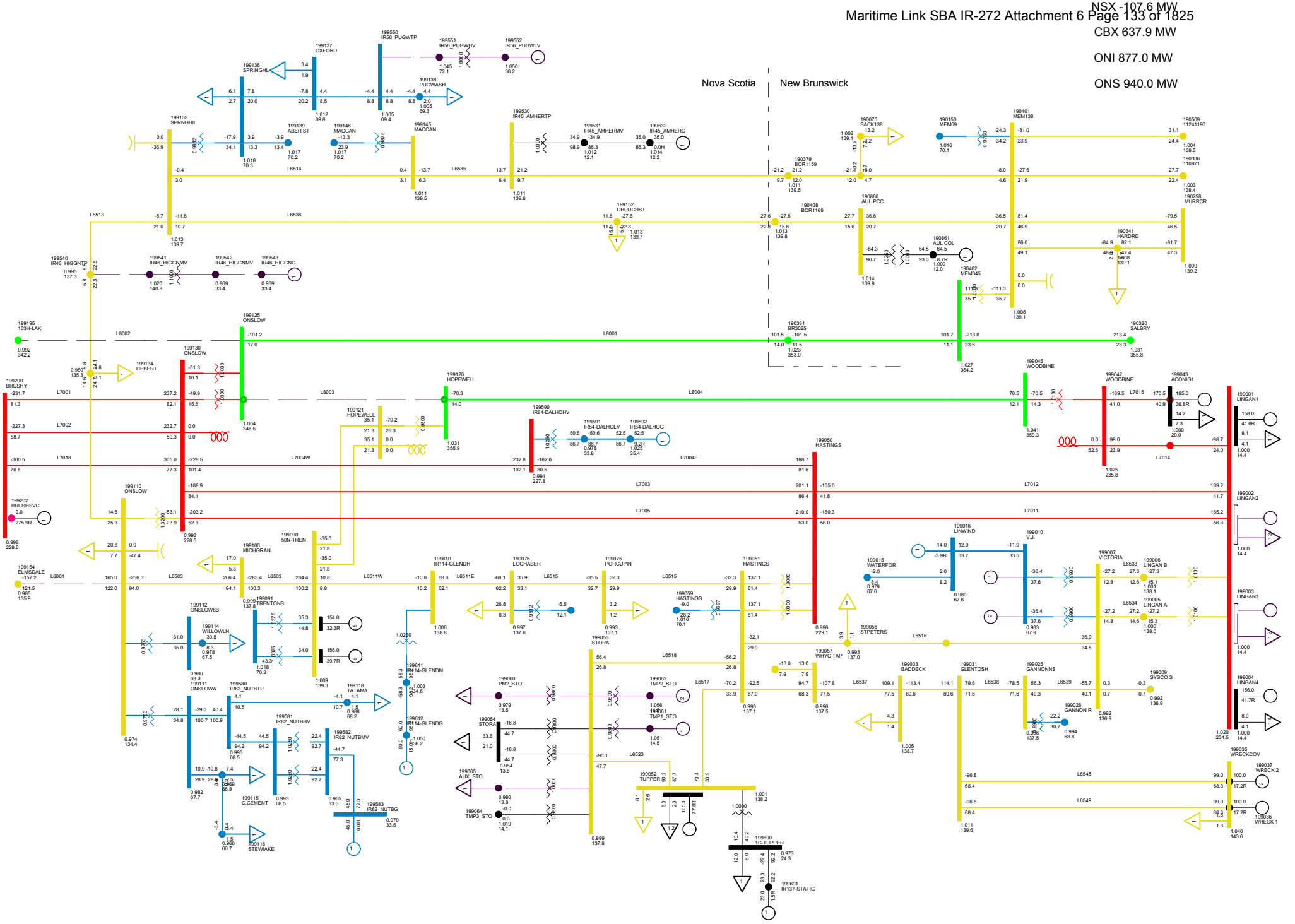

2010 SUMMER PEAK, NSLOAD=1700
NS-NB=+250; NB-NE=1000; CBX=780; ONI=1036 ONS=791
NORTHEASTERN NS THU, FEB 12 2009 18:20

Total Wind Gen: 290.1 MW | Gross Tupper 165.0 MW | Gross Wreck Cove 200.0 MW | Net Stora Load 33.7 MW
Gross Lingan 314.0 MW | Gross Trenton 310.0 MW | Gross Gas Turbine 0.0 MW | Total BMPC Load 108.5 MW
Gross Pt Aconi 185.0 MW | Gross Tuft's Cove 0.0 MW | Gross Small Hydro 42.9 MW

Bus - VOLTAGE (KV/PU)
Branch - MW/% OF RATE A
Equipment - MW/MVAR
110.0%RATEA
1.050OV 0.950UV
KV: <=25.000 <=69.000 <=138.000 <=230.000 <=345.000 >345.000

Figure 55A

Total Wind Gen: 290.1 MW | Gross Tupper 165.0 MW | Gross Wreck Cove 200.0 MW

Gross Lingan 314.0 MW | Gross Trenton 310.0 MW | Gross Gas Turbine 0.0 MW

Gross Pt Aconi 185.0 MW | Gross Tuft's Cove 0.0 MW | Gross Small Hydro 42.9 MW

Net Stora Load 33.7 MW | Total BMPC Load 108.5 MW

NSX -107.6 MW

CBX 637.9 MW

ONI 877.0 MW

ONS 940.0 MW

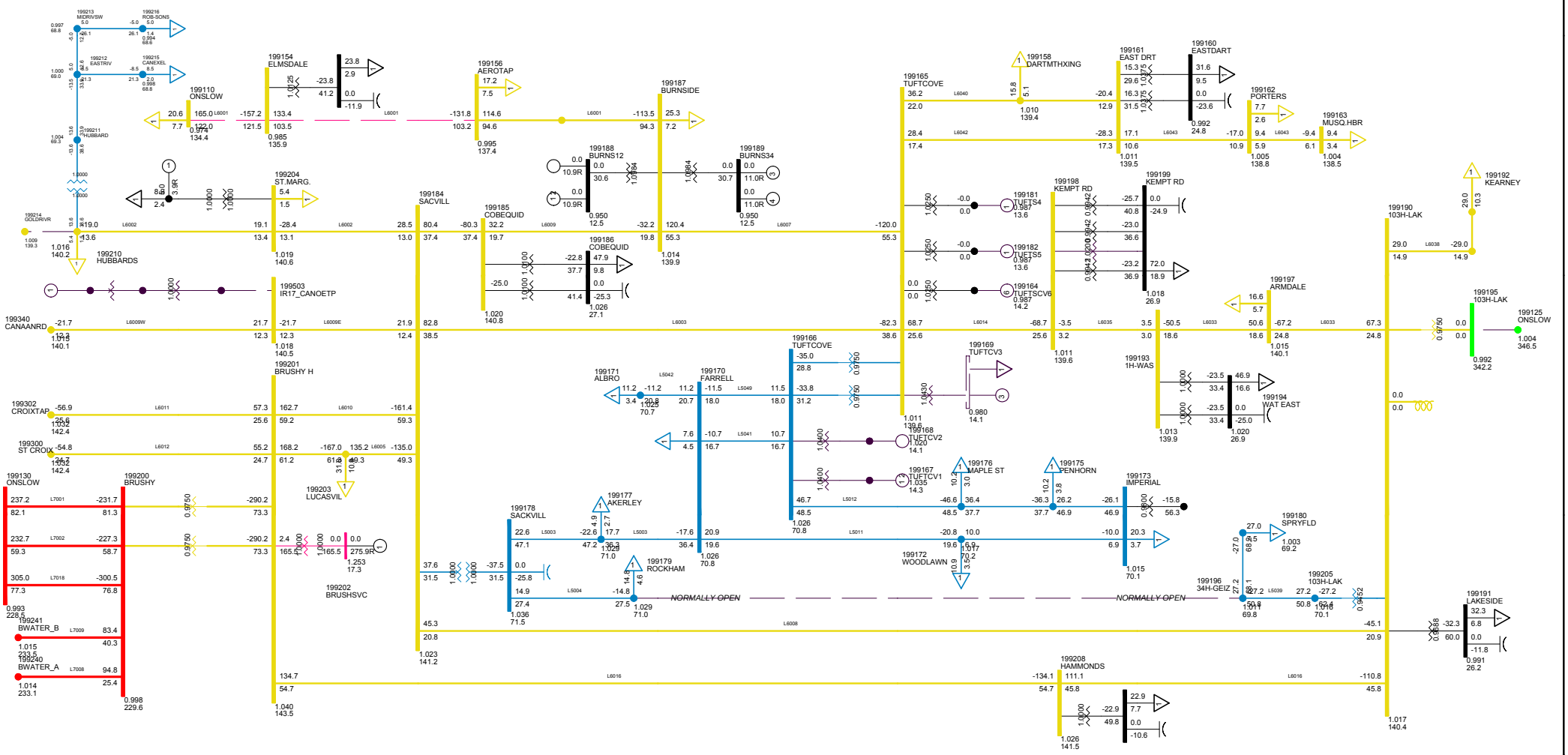

2010 SUMMER PEAK, NSLOAD=1700
NS-NB=+250; NB-NE=1000; CBX=780; ONI=1036 ONS=791
METRO ZONE THU, FEB 12 2009 18:21

Bus - VOLTAGE (KV/PU)
Branch - MW/% OF RATE A
Equipment - MW/MVAR
100.0%RATEA
1.050OV 0.950UV
KV: <=30.000 <=69.000 <=138.000 <=230.000 <=345.000 >345.000

Figure 55B

NSX -35.1 MW

CBX 637.4 MW

ONI 871.9 MW

ONS 862.3 MW

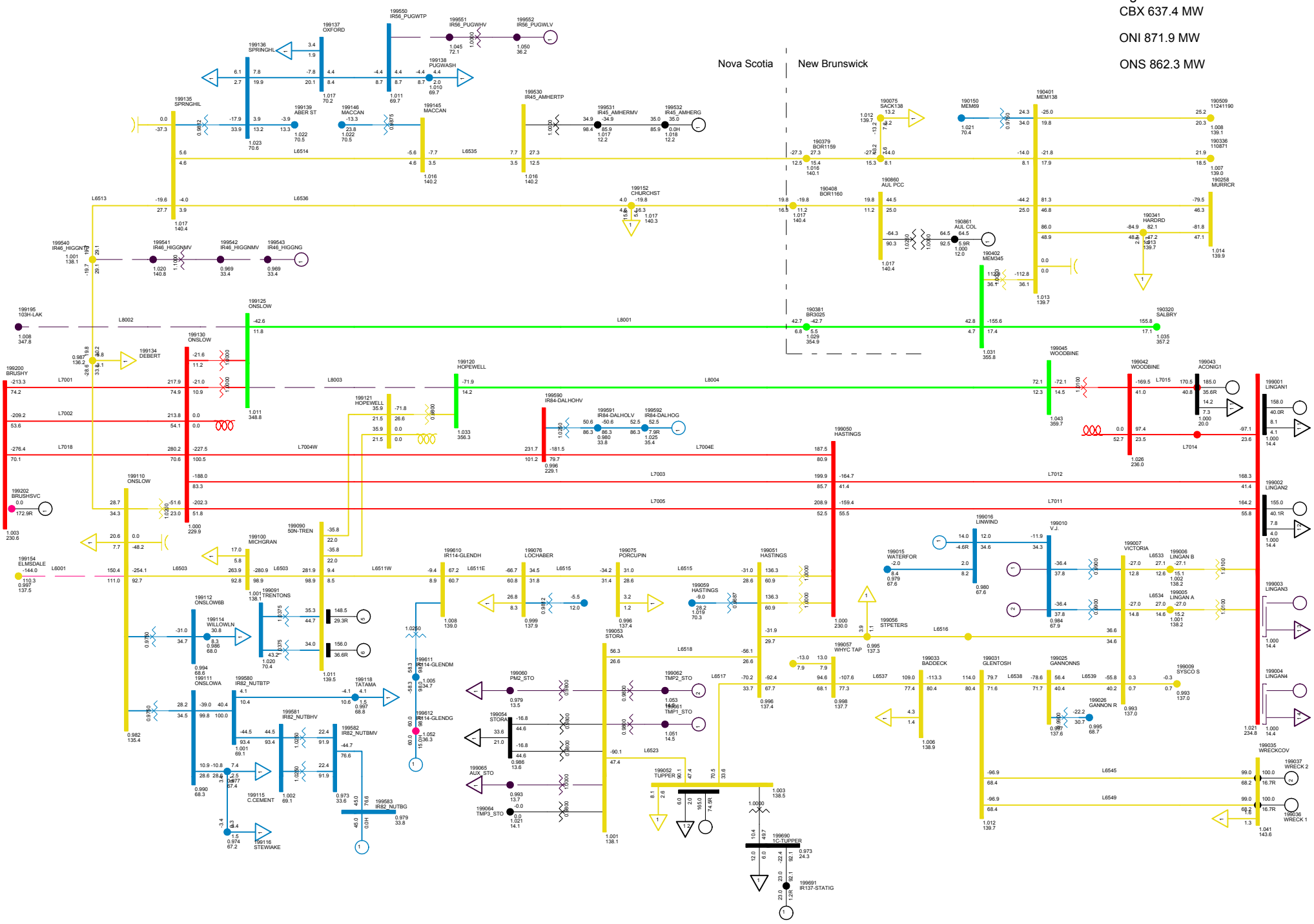

2010 SUMMER PEAK, NSLOAD=1700
NS-NB=+250; NB-NE=1000; CBX=780; ONI=1036 ONS=791
NORTHEASTERN NS THU, FEB 12 2009 18:43

Total Wind Gen: 290.1 MW
Gross Lingan 313.0 MW
Gross Pt Aconi 185.0 MW
Gross Tupper 165.0 MW
Gross Trenton 304.5 MW
Gross Tuft's Cove 70.0 MW
Gross Wreck Cove 200.0 MW
Gross Gas Turbine 0.0 MW
Gross Small Hydro 42.9 MW
Net Stora Load 33.7 MW
Total BMPC Load 108.5 MW

Bus - VOLTAGE (KV/PU)
Branch - MW/% OF RATE A
Equipment - MW/MVAR
110.0%RATEA
1.050OV 0.950UV
KV: <=25.000 <=69.000 <=138.000 <=230.000 <=345.000 >345.000

Figure 56A

Total Wind Gen: 290.1 MW
Gross Tupper 165.0 MW
Gross Wreck Cove 200.0 MW
Gross Lingan 313.0 MW
Gross Trenton 304.5 MW
Gross Gas Turbine 0.0 MW
Gross Pt Aconi 185.0 MW
Gross Tuft's Cove 70.0 MW
Gross Small Hydro 42.9 MW
Net Stora Load 33.7 MW
Total BMPC Load 108.5 MW

NSX -35.1 MW
CBX 637.4 MW
ONI 871.9 MW
ONS 862.3 MW

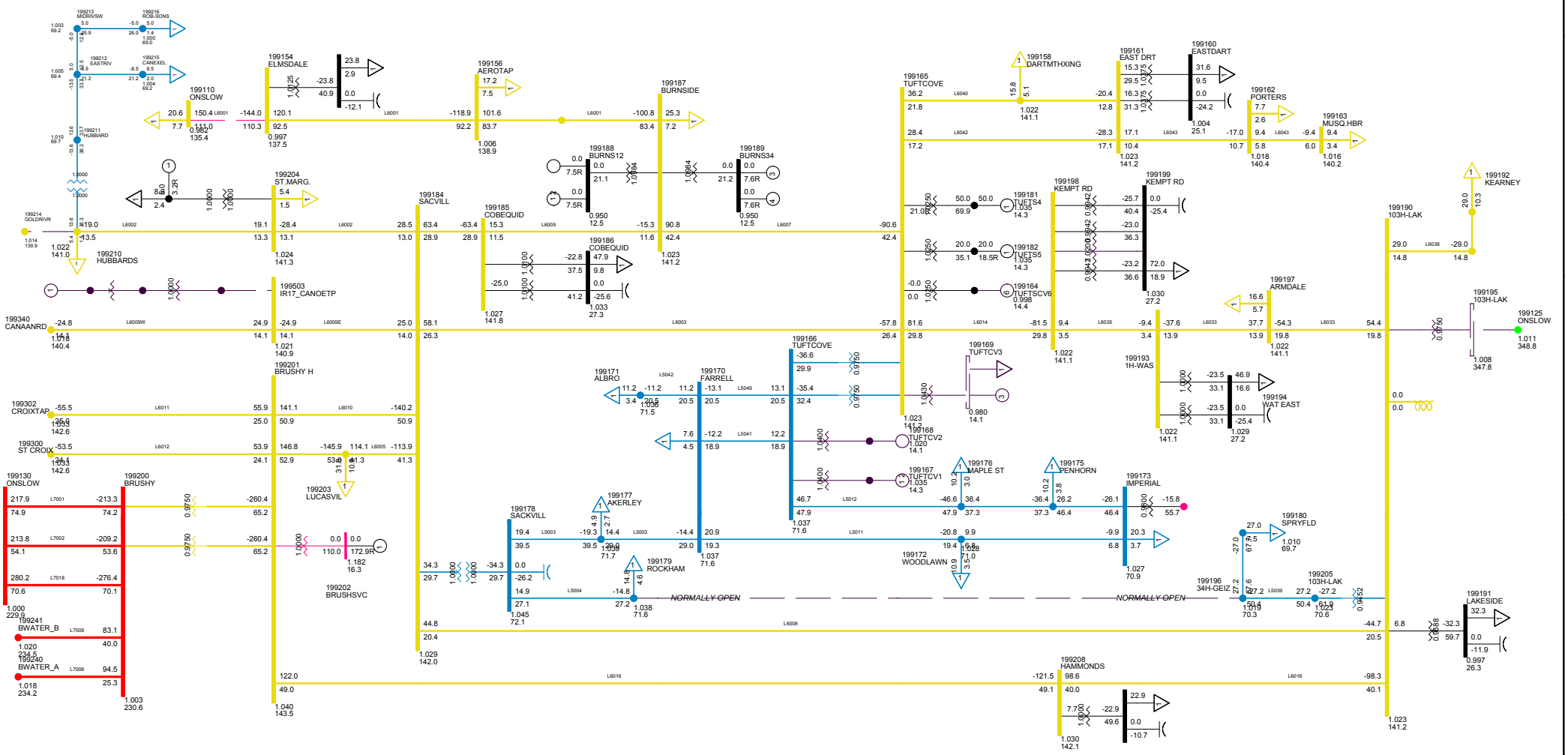

2010 SUMMER PEAK, NSLOAD=1700
NS-NB=+250; NB-NE=1000; CBX=780; ONI=1036 ONS=791
METRO ZONE THU, FEB 12 2009 18:44

Bus - VOLTAGE (KV/PU)
Branch - MW/% OF RATE A
Equipment - MW/MVAR
100.0%RATEA
1.050OV 0.950UV
KV: <=30.000 <=69.000 <=138.000 <=230.000 <=345.000 >345.000

Figure 56B

Figure 57

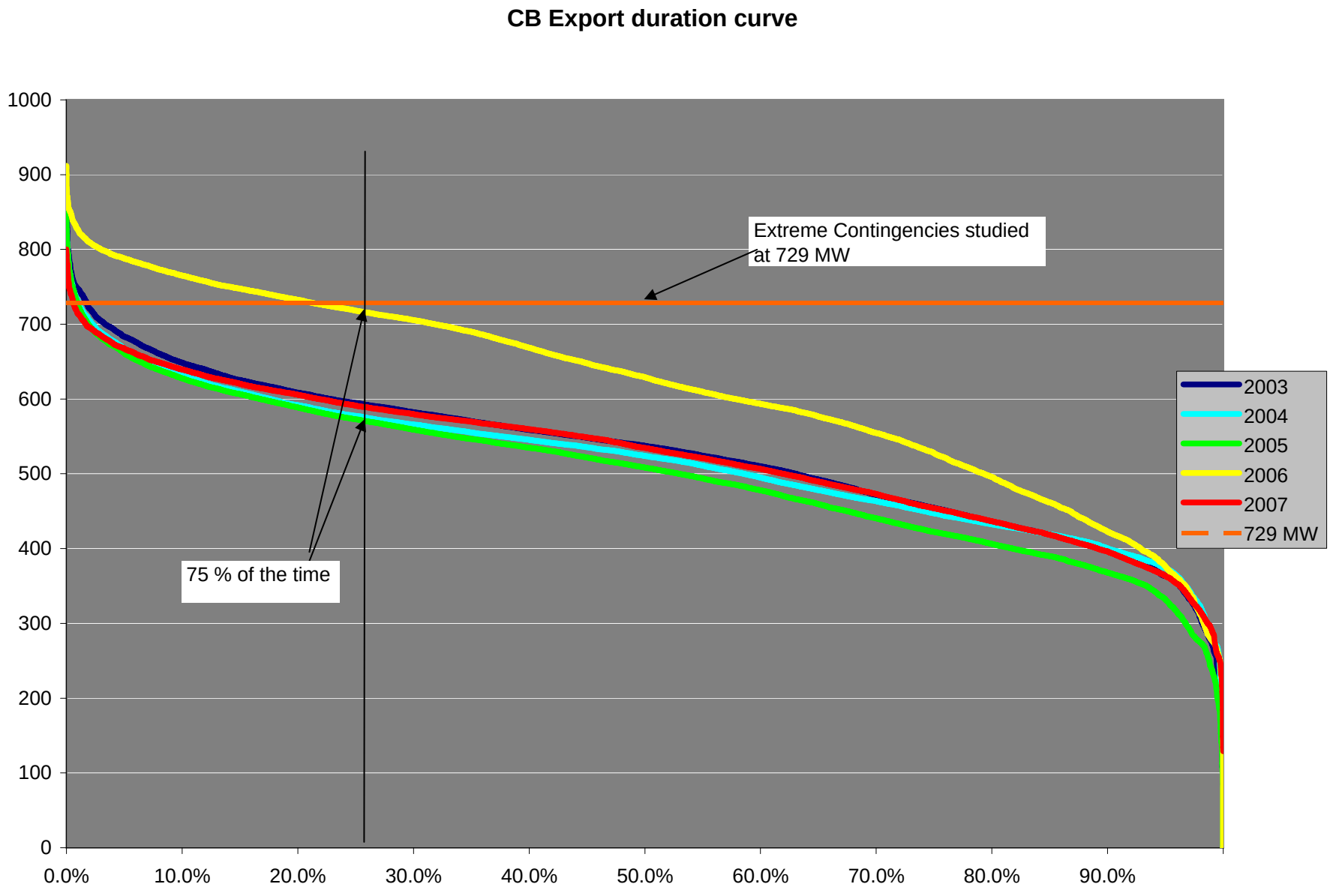
CB Export duration curve
1000
900
800
700
600
500
400
300
200
100
0
0.0%
10.0%
20.0%
30.0%
40.0%
50.0%
60.0%
70.0%
80.0%
90.0%
Extreme Contingencies studied at 729 MW
75 % of the time
2003
2004
2005
2006
2007
729 MW

Figure 58

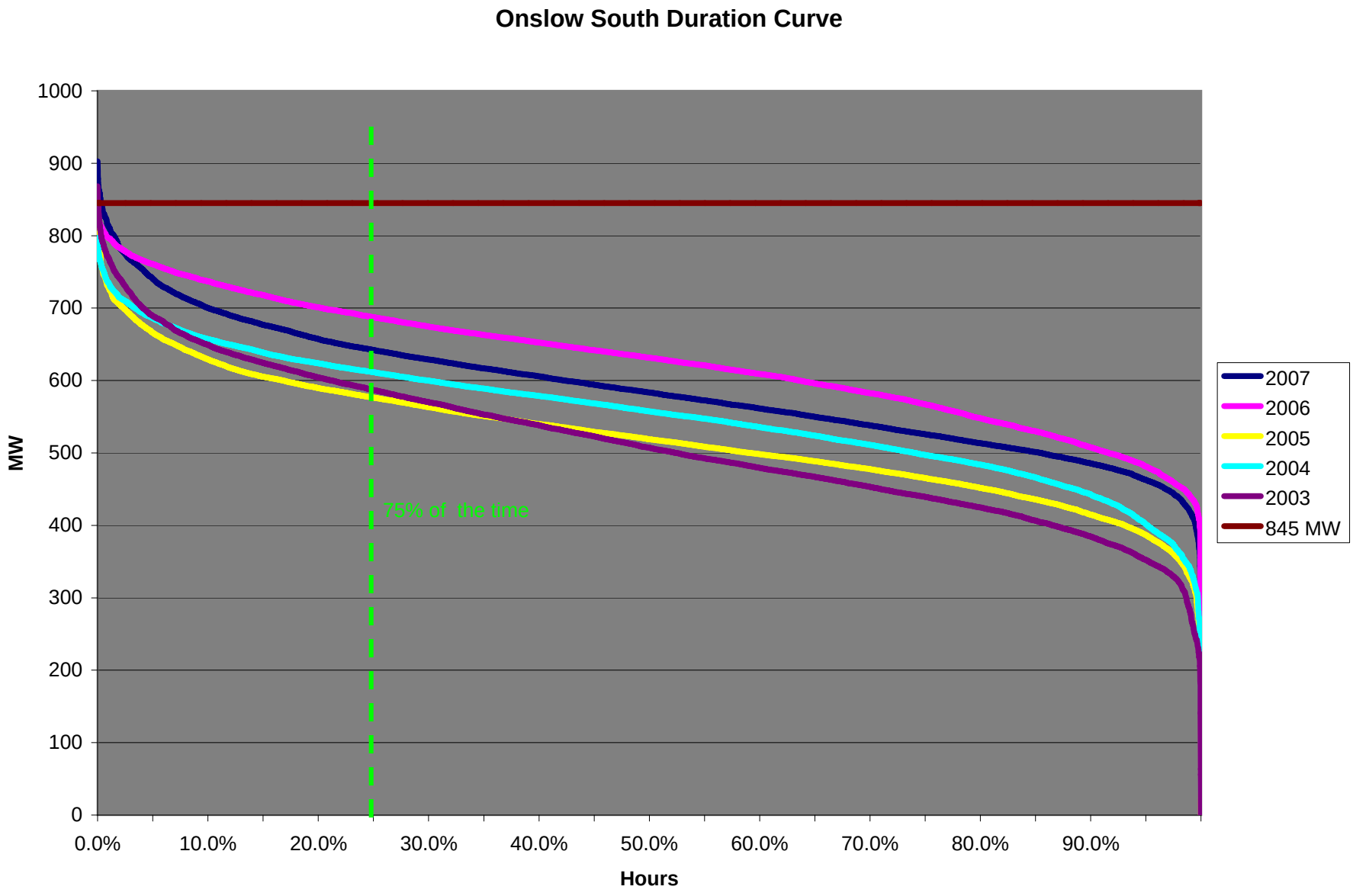
Onslow South Duration Curve
1000
900
800
700
600
500
400
300
200
100
0
MW
0.0%
10.0%
20.0%
30.0%
40.0%
50.0%
60.0%
70.0%
80.0%
90.0%
Hours
75% of the time
2007
2006
2005
2004
2003
845 MW

Figure 59

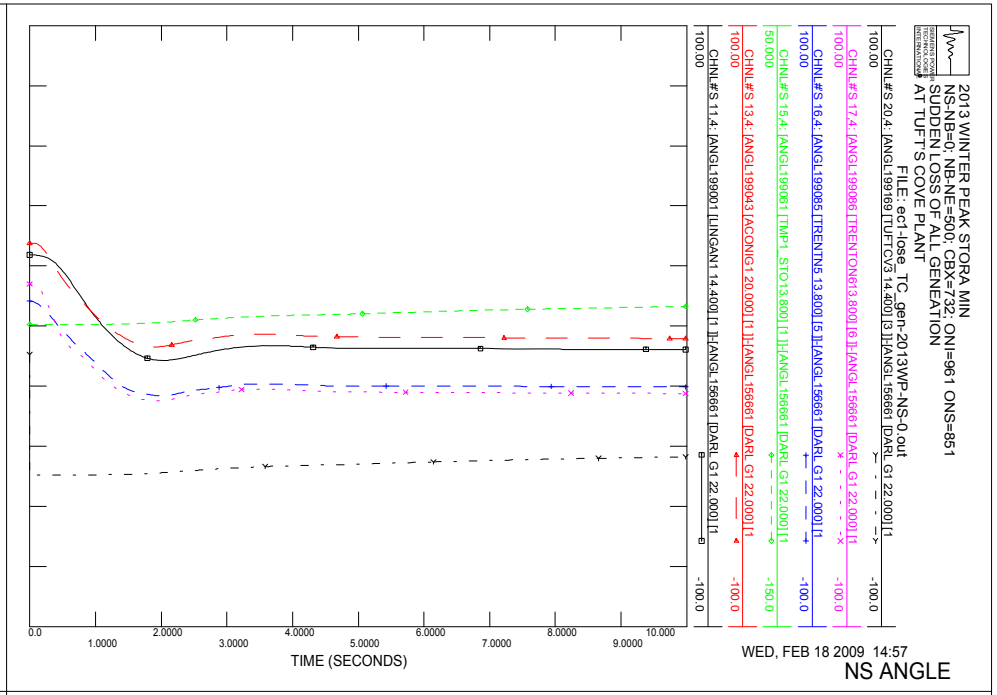
2013 WINTER PEAK STORA MIN
NS-NB=0; NB-NE=500; CBX=732; ONI=961 ONS=851
SUDDEN LOSS OF ALL GENEATION
AT TUFT'S COVE PLANT
FILE: ec1-lose_TC_gen-2013WP-NS-0.out
CHNL# 20.4: [ANGL199169 [TUFTCV3 14.400] [3]] [ANGL156661 [DARL G1 22.000] [1]
CHNL# 17.4: [ANGL199086 [TRENTON613.800] [6]] [ANGL156661 [DARL G1 22.000] [1]
CHNL# 16.4: [ANGL199085 [TRENTN5 13.800] [5]] [ANGL156661 [DARL G1 22.000] [1]
CHNL# 15.4: [ANGL199061 [TMP1 STO13.800] [1]] [ANGL156661 [DARL G1 22.000] [1]
CHNL# 13.4: [ANGL199043 [ACONIG1 20.000] [1]] [ANGL156661 [DARL G1 22.000] [1]
CHNL# 11.4: [ANGL199001 [LINGAN1 14.400] [1]] [ANGL156661 [DARL G1 22.000] [1]
100.00
-100.0
-150.0
50.000
0.0
1.0000
2.0000
3.0000
4.0000
5.0000
6.0000
7.0000
8.0000
9.0000
10.000
TIME (SECONDS)
WED, FEB 18 2009 14:57
NS ANGLE

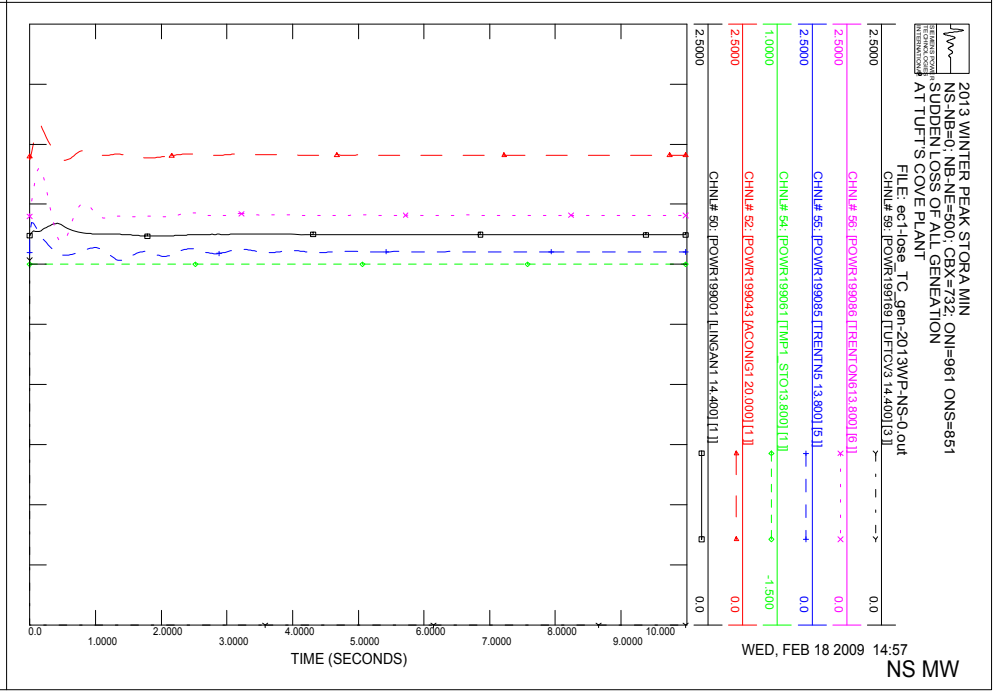
2013 WINTER PEAK STORA MIN
NS-NB=0; NB-NE=500; CBX=732; ONI=961 ONS=851
SUDDEN LOSS OF ALL GENEATION
AT TUFT'S COVE PLANT
FILE: ec1-lose_TC_gen-2013WP-NS-0.out
CHNL# 59: [POWER199169 [TUFTCV3 14.400] [3]]
CHNL# 56: [POWER199086 [TRENTON613.800] [6]]
CHNL# 55: [POWER199085 [TRENTN5 13.800] [5]]
CHNL# 54: [POWER199061 [TMP1 STO13.800] [1]]
CHNL# 52: [POWER199043 [ACONIG1 20.000] [1]]
CHNL# 50: [POWER199001 [LINGAN1 14.400] [1]]
2.5000
1.0000
0.0
-1.500
0.0
1.0000
2.0000
3.0000
4.0000
5.0000
6.0000
7.0000
8.0000
9.0000
10.000
TIME (SECONDS)
WED, FEB 18 2009 14:57
NS MW

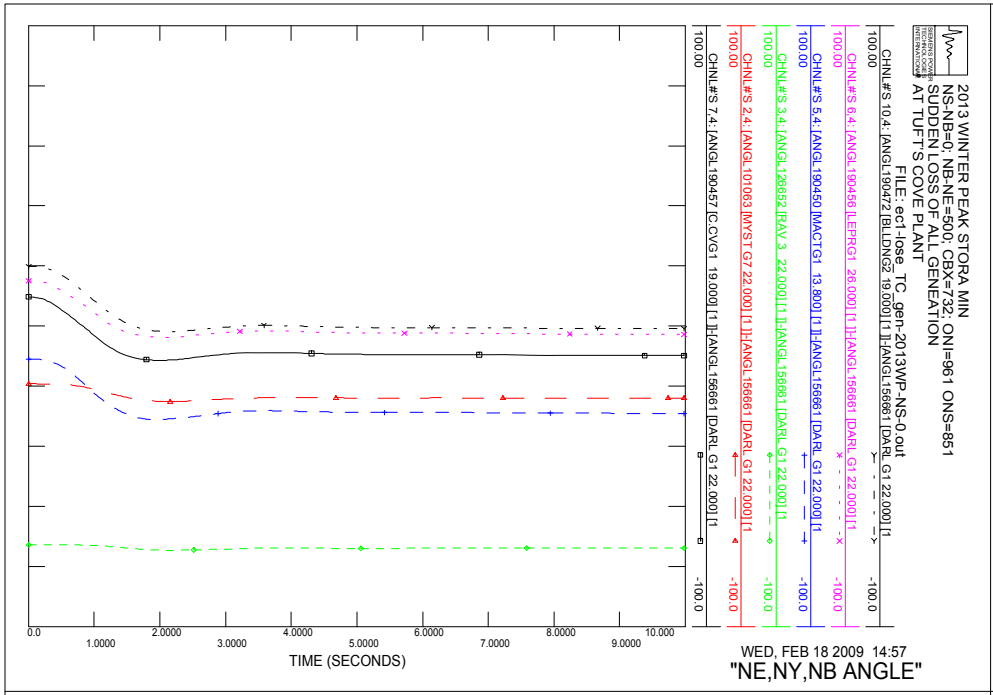
2013 WINTER PEAK STORA MIN
NS-NB=0; NB-NE=500; CBX=732; ONI=961 ONS=851
SUDDEN LOSS OF ALL GENEATION
AT TUFT'S COVE PLANT
FILE: ec1-lose_TC_gen-2013WP-NS-0.out
CHNL# 10.4: [ANGL190472 [BLLDNG2 19.000] [1]] [ANGL156661 [DARL G1 22.000] [1]
CHNL# 6.4: [ANGL190456 [LEPRG1 26.000] [1]] [ANGL156661 [DARL G1 22.000] [1]
CHNL# 5.4: [ANGL190450 [MACTG1 13.800] [1]] [ANGL156661 [DARL G1 22.000] [1]
CHNL# 3.4: [ANGL126652 [RAV 3 22.000] [1]] [ANGL156661 [DARL G1 22.000] [1]
CHNL# 2.4: [ANGL101063 [MYST G7 22.000] [1]] [ANGL156661 [DARL G1 22.000] [1]
CHNL# 7.4: [ANGL190457 [C.CVG1 19.000] [1]] [ANGL156661 [DARL G1 22.000] [1]
100.00
-100.0
0.0
1.0000
2.0000
3.0000
4.0000
5.0000
6.0000
7.0000
8.0000
9.0000
10.000
TIME (SECONDS)
WED, FEB 18 2009 14:57
"NE,NY,NB ANGLE"

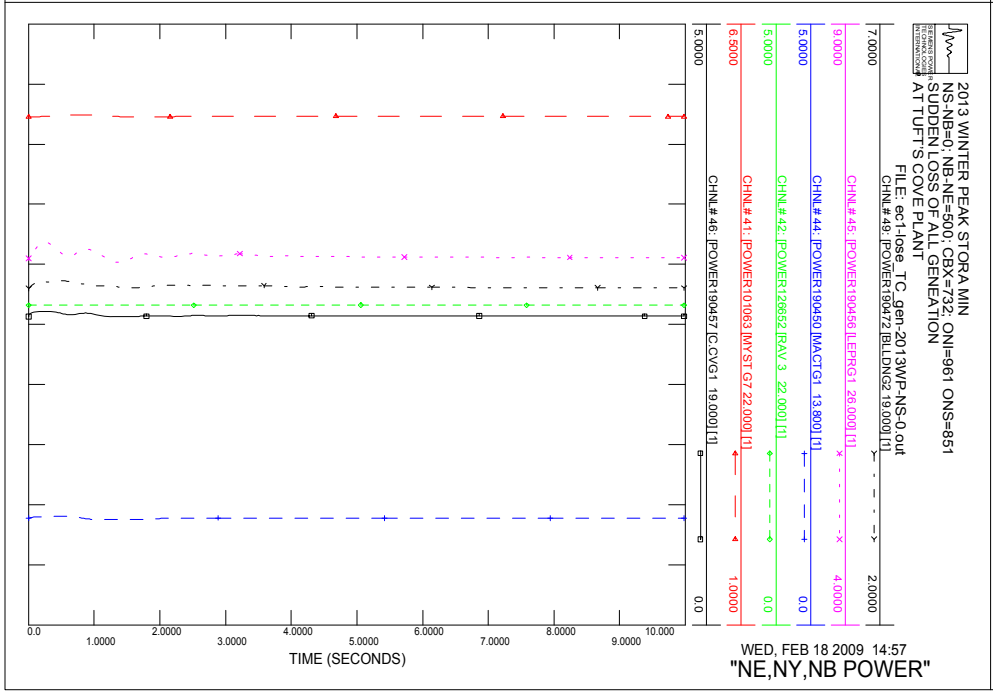
2013 WINTER PEAK STORA MIN
NS-NB=0; NB-NE=500; CBX=732; ONI=961 ONS=851
SUDDEN LOSS OF ALL GENEATION
AT TUFT'S COVE PLANT
FILE: ec1-lose_TC_gen-2013WP-NS-0.out
CHNL# 49: [POWER190472 [BLLDNG2 19.000] [1]]
CHNL# 45: [POWER190456 [LEPRG1 26.000] [1]]
CHNL# 44: [POWER190450 [MACTG1 13.800] [1]]
CHNL# 42: [POWER126652 [RAV 3 22.000] [1]]
CHNL# 41: [POWER101063 [MYST G7 22.000] [1]]
CHNL# 46: [POWER190457 [C.CVG1 19.000] [1]]
7.0000
9.0000
5.0000
5.0000
6.5000
5.0000
2.0000
4.0000
0.0
0.0
1.0000
0.0
1.0000
2.0000
3.0000
4.0000
5.0000
6.0000
7.0000
8.0000
9.0000
10.000
TIME (SECONDS)
WED, FEB 18 2009 14:57
"NE,NY,NB POWER"

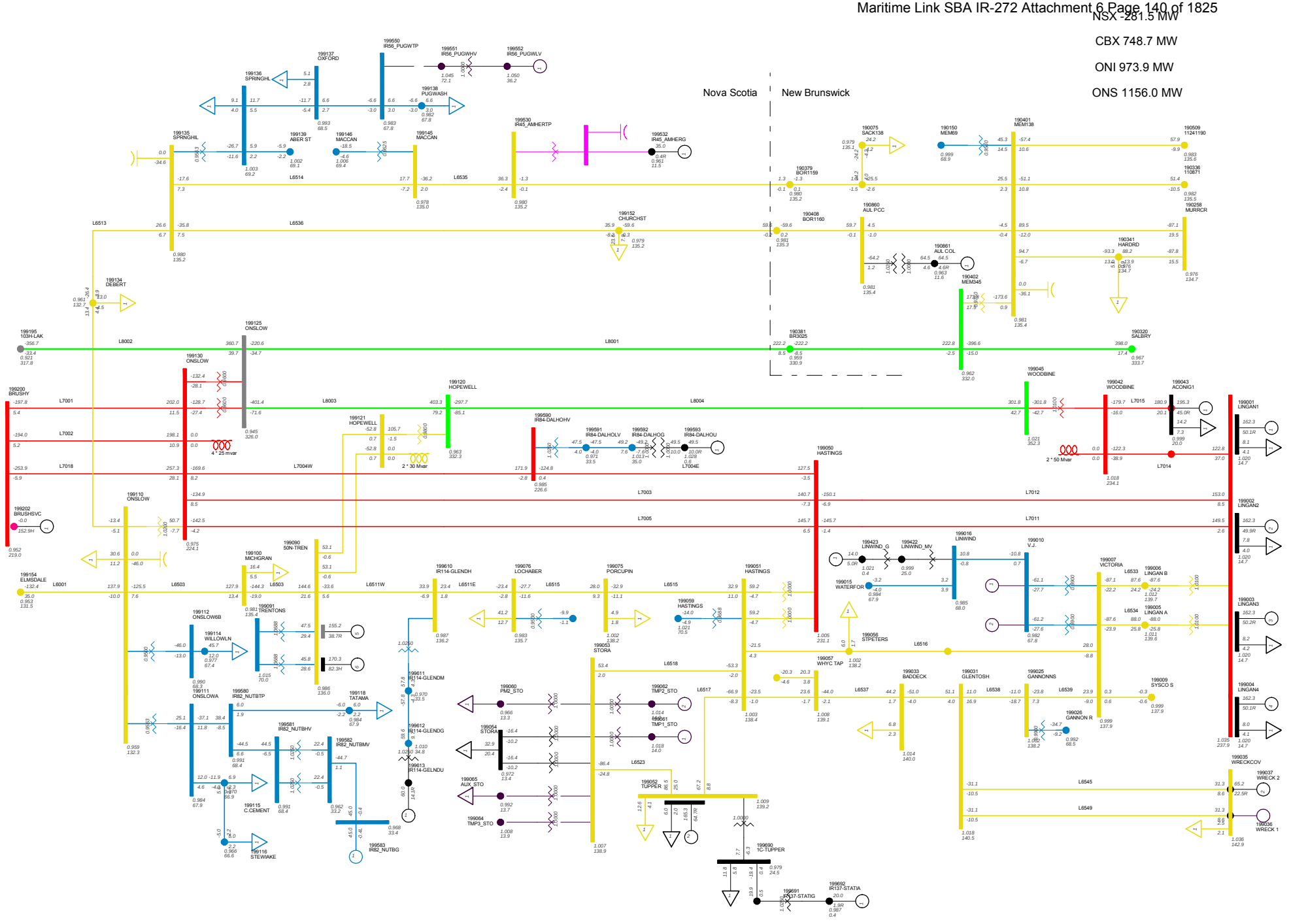

2013 WINTER PEAK STORA MIN NS-NB=0; NB-NE=500; CBX=732; ONI=961 ONS=851 NORTHEASTERN NS FRI, FEB 13 2009 12:41	Total Wind Gen: 138.9 MW Gross Lingan 649.1 MW Gross Pt Aconi 195.3 MW	Gross Tupper 165.3 MW Gross Trenton 325.5 MW Gross Tuft's Cove 0.0 MW	Gross Wreck Cove 65.2 MW Gross Gas Turbine 24.0 MW Gross Small Hydro 162.5 MW	Net Stora Load 33.0 MW Total BMPC Load 75.2 MW	Figure 60A

Total Wind Gen: 138.9 MW
Gross Tupper 165.3 MW
Gross Wreck Cove 65.2 MW
Gross Lingan 649.1 MW
Gross Trenton 325.5 MW
Gross Gas Turbine 24.0 MW
Gross Pt Aconi 195.3 MW
Gross Tuft's Cove 0.0 MW
Gross Small Hydro 162.5 MW
Net Stora Load 33.0 MW
Total BMPC Load 75.2 MW

NSX -281.5 MW
CBX 748.7 MW
ONI 973.9 MW
ONS 1156.0 MW

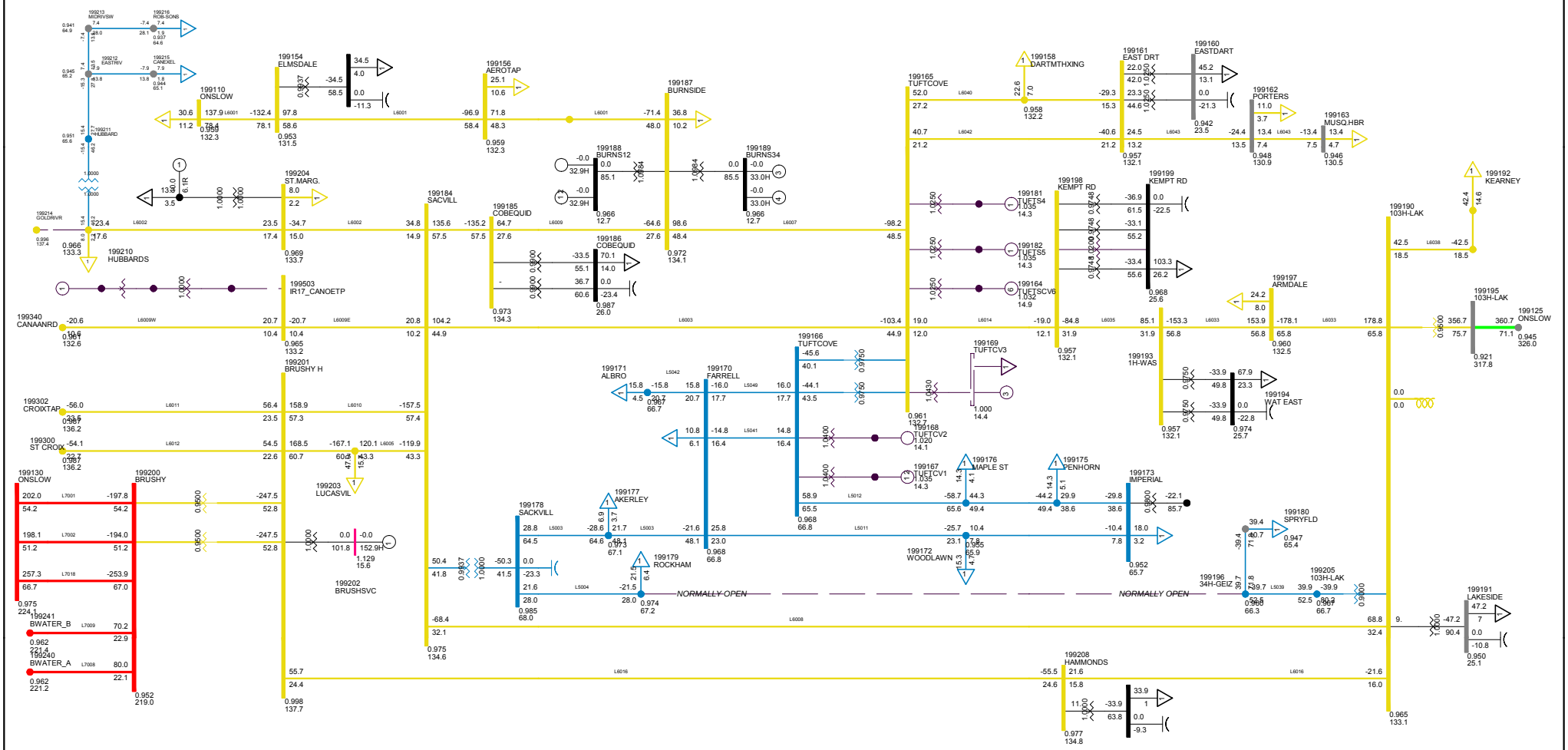

2013 WINTER PEAK STORA MIN
NS-NB=0; NB-NE=500; CBX=732; ONI=961 ONS=851
METRO ZONE FRI, FEB 13 2009 12:44

Bus - VOLTAGE (KV/PU)
Branch - MW/% OF RATE B
Equipment - MW/MVAR
110.0%RATE B
1.050OV 0.950UV
KV: <=30.000 <=69.000 <=138.000 <=230.000 <=345.000 >345.000

Figure 60B

Figure 61

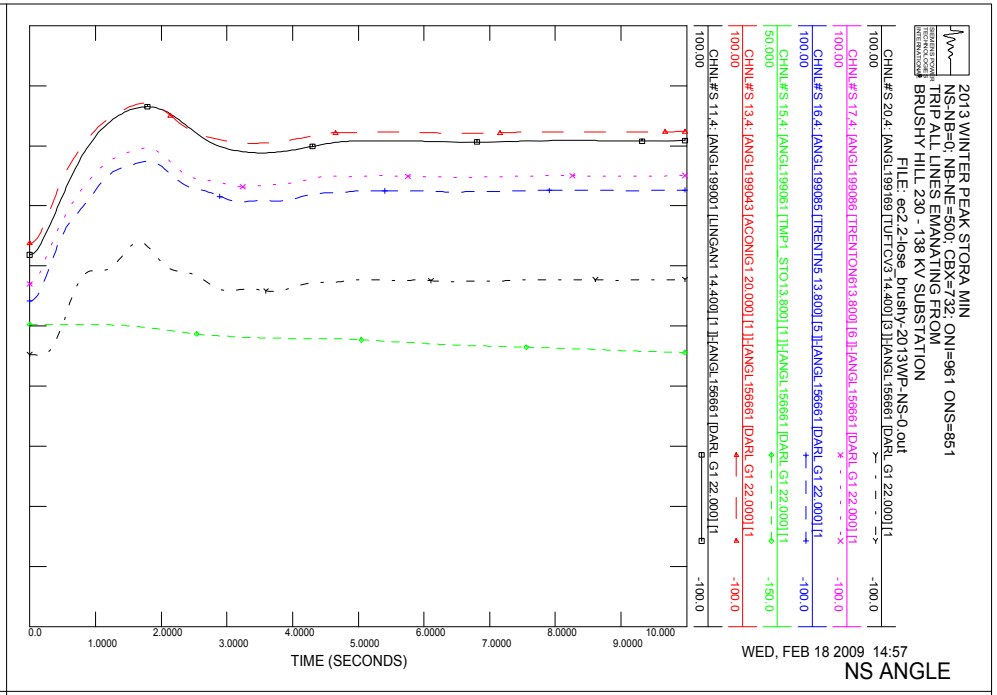
2013 WINTER PEAK STORA MIN
NS-NB=0; NB-NE=500; CBX=732; ONI=961 ONS=851
TRIP ALL LINES EMANATING FROM
BRUSHY HILL 230 - 138 KV SUBSTATION
FILE: ec2.2-lose_brushy-2013WP-NS-0.out
CHNL# 20: [ANGL199169 [TUFTCV3 14.400[3]] [ANGL156661 [DARL G1 22.000[1]
CHNL# 17: [ANGL199086 [TRENTON613.800[6]] [ANGL156661 [DARL G1 22.000[1]
CHNL# 16: [ANGL199085 [TRENTN5 13.800[5]] [ANGL156661 [DARL G1 22.000[1]
CHNL# 15: [ANGL199061 [TMP1 STO13.800[1]] [ANGL156661 [DARL G1 22.000[1]
CHNL# 13: [ANGL199043 [ACONIG1 20.000[1]] [ANGL156661 [DARL G1 22.000[1]
CHNL# 11: [ANGL199001 [LINGAN1 14.400[1]] [ANGL156661 [DARL G1 22.000[1]
100.00
50.000
-100.0
-150.0
0.0
1.0000
2.0000
3.0000
4.0000
5.0000
6.0000
7.0000
8.0000
9.0000
10.000
TIME (SECONDS)
WED, FEB 18 2009 14:57
NS ANGLE

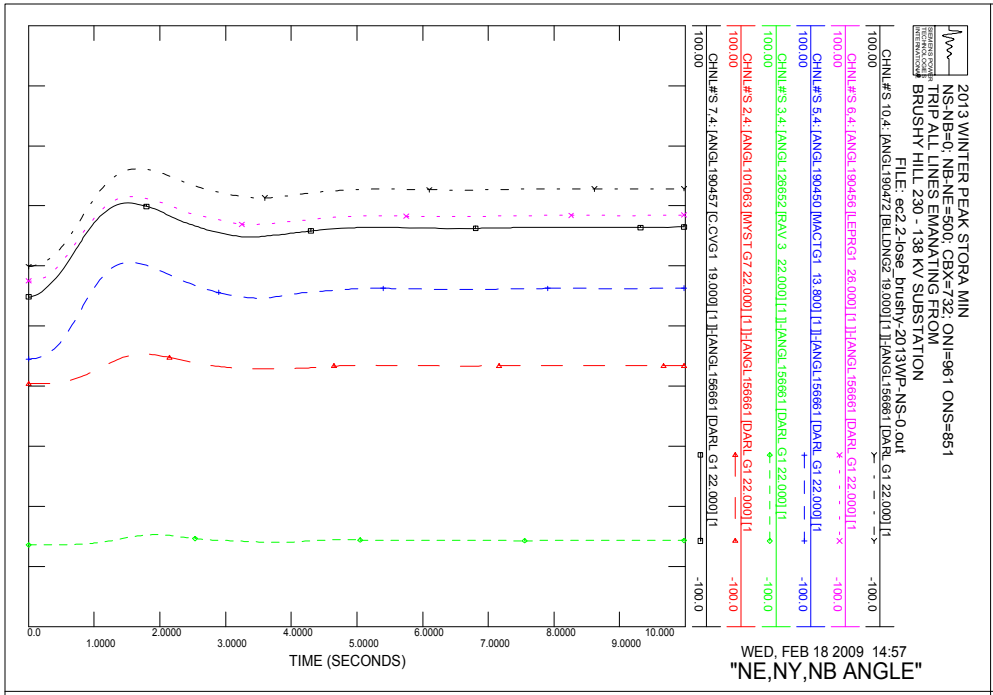
2013 WINTER PEAK STORA MIN
NS-NB=0; NB-NE=500; CBX=732; ONI=961 ONS=851
TRIP ALL LINES EMANATING FROM
BRUSHY HILL 230 - 138 KV SUBSTATION
FILE: ec2.2-lose_brushy-2013WP-NS-0.out
CHNL# 10: [ANGL190472 [BLLDNG2 19.000[1]] [ANGL156661 [DARL G1 22.000[1]
CHNL# 6: [ANGL190456 [LEPRG1 26.000[1]] [ANGL156661 [DARL G1 22.000[1]
CHNL# 5: [ANGL190450 [MACTG1 13.800[1]] [ANGL156661 [DARL G1 22.000[1]
CHNL# 3: [ANGL126652 [RAV 3 22.000[1]] [ANGL156661 [DARL G1 22.000[1]
CHNL# 2: [ANGL101063 [MYST G7 22.000[1]] [ANGL156661 [DARL G1 22.000[1]
CHNL# 7: [ANGL190457 [C.CVG1 19.000[1]] [ANGL156661 [DARL G1 22.000[1]
100.00
-100.0
0.0
1.0000
2.0000
3.0000
4.0000
5.0000
6.0000
7.0000
8.0000
9.0000
10.000
TIME (SECONDS)
WED, FEB 18 2009 14:57
"NE,NY,NB ANGLE"

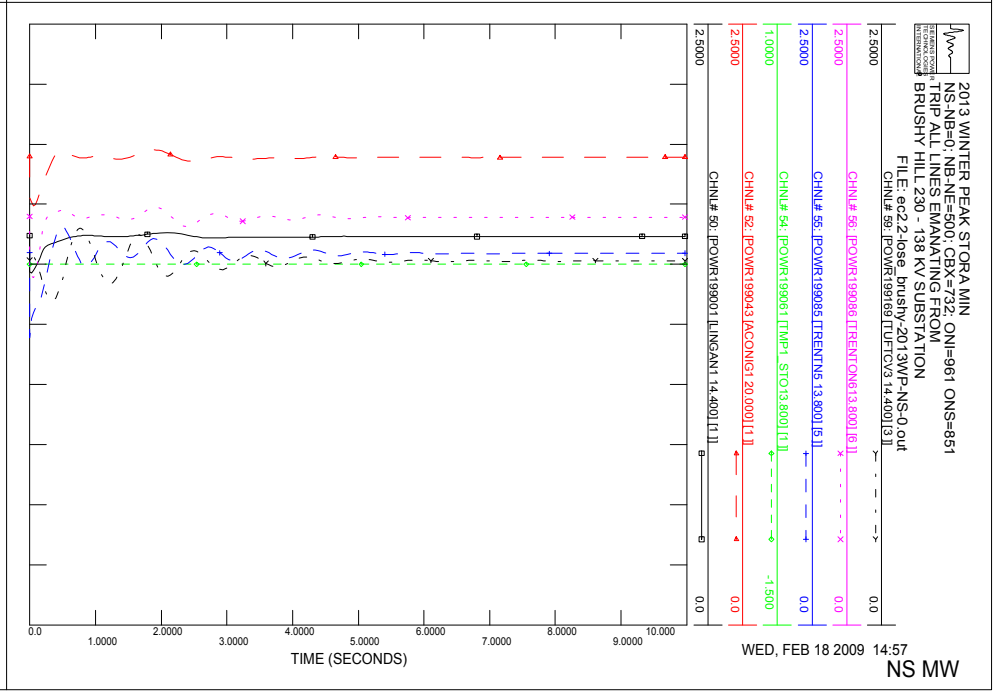
2013 WINTER PEAK STORA MIN
NS-NB=0; NB-NE=500; CBX=732; ONI=961 ONS=851
TRIP ALL LINES EMANATING FROM
BRUSHY HILL 230 - 138 KV SUBSTATION
FILE: ec2.2-lose_brushy-2013WP-NS-0.out
CHNL# 59: [POWR199169 [TUFTCV3 14.400[3]]
CHNL# 56: [POWR199086 [TRENTON613.800[6]]
CHNL# 55: [POWR199085 [TRENTN5 13.800[5]]
CHNL# 54: [POWR199061 [TMP1 STO13.800[1]]
CHNL# 52: [POWR199043 [ACONIG1 20.000[1]]
CHNL# 50: [POWR199001 [LINGAN1 14.400[1]]
2.5000
1.0000
0.0
-1.500
TIME (SECONDS)
WED, FEB 18 2009 14:57
NS MW

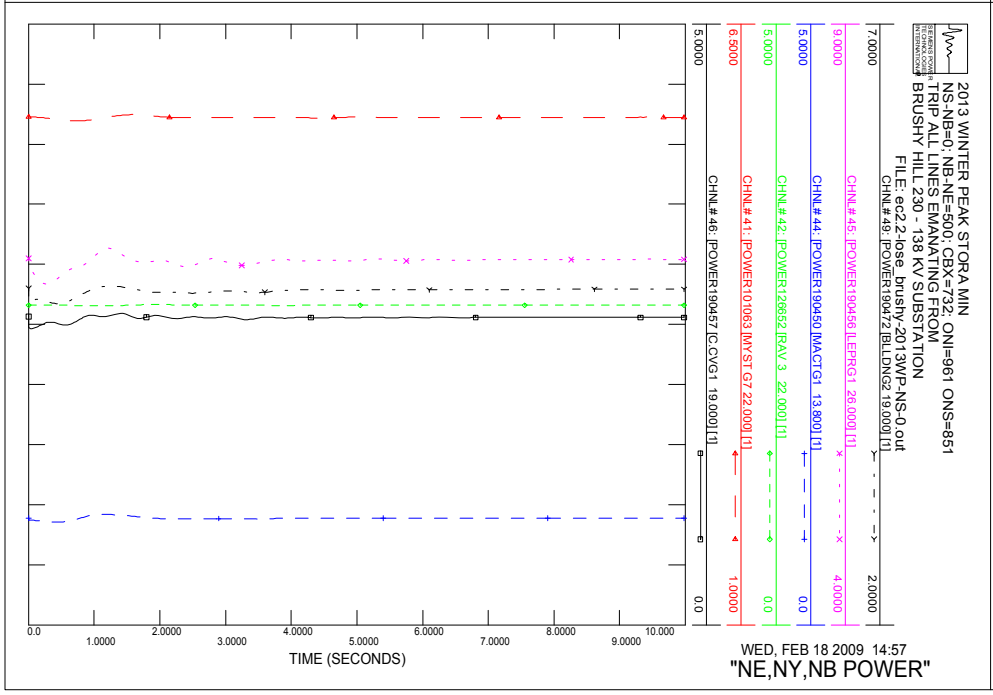
2013 WINTER PEAK STORA MIN
NS-NB=0; NB-NE=500; CBX=732; ONI=961 ONS=851
TRIP ALL LINES EMANATING FROM
BRUSHY HILL 230 - 138 KV SUBSTATION
FILE: ec2.2-lose_brushy-2013WP-NS-0.out
CHNL# 49: [POWER190472 [BLLDNG2 19.000[1]]
CHNL# 45: [POWER190456 [LEPRG1 26.000[1]]
CHNL# 44: [POWER190450 [MACTG1 13.800[1]]
CHNL# 42: [POWER126652 [RAV 3 22.000[1]]
CHNL# 41: [POWER101063 [MYST G7 22.000[1]]
CHNL# 46: [POWER190457 [C.CVG1 19.000[1]]
7.0000
9.0000
5.0000
6.0000
4.0000
2.0000
0.0
1.0000
TIME (SECONDS)
WED, FEB 18 2009 14:57
"NE,NY,NB POWER"

NSX 289.4 MW

CBX 729.6 MW

ONI 956.4 MW

ONS 554.5 MW

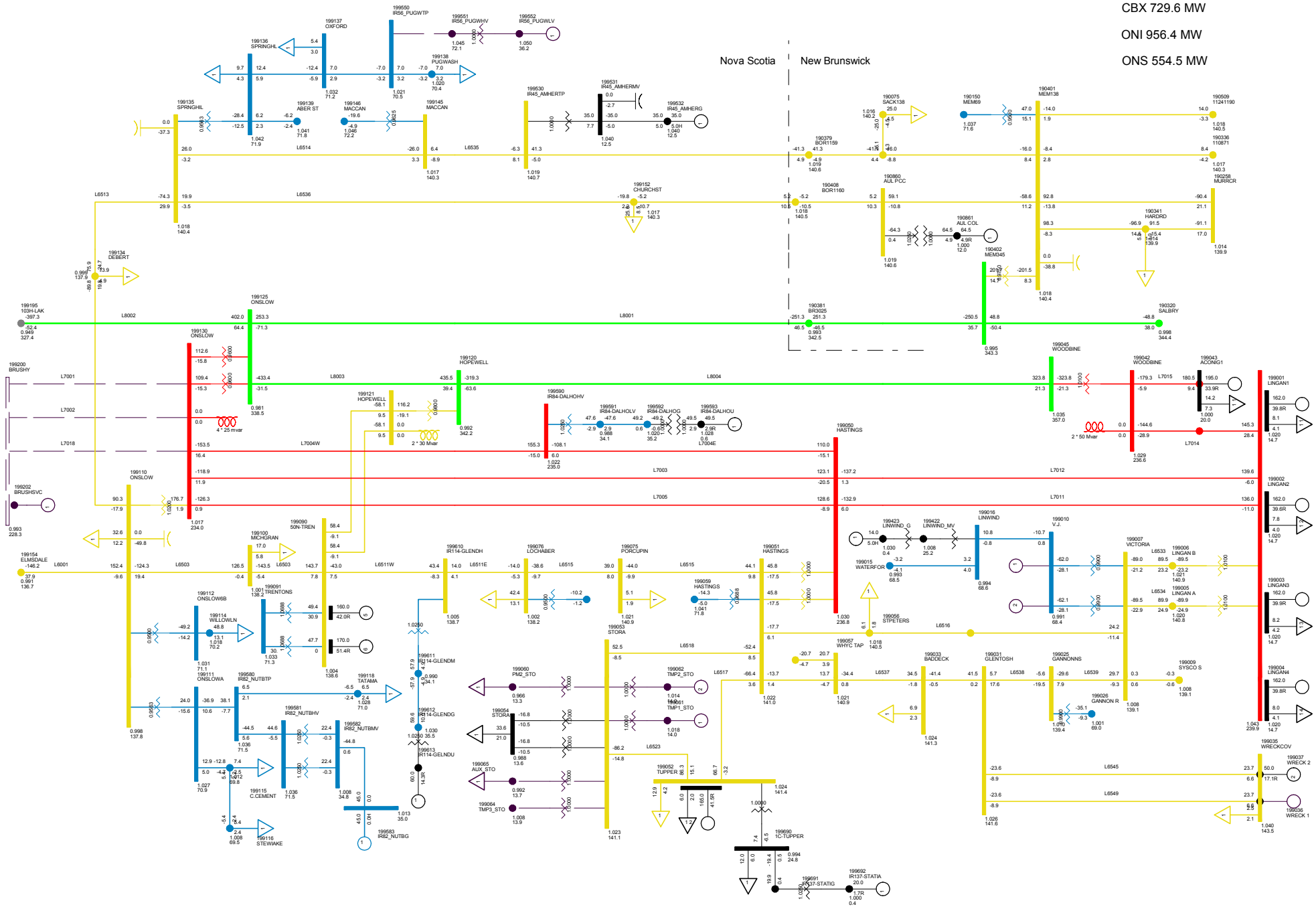

2013 WINTER PEAK STORA MIN
LOSE ALL BRUSHY HILL
NORTHEASTERN NS FRI, FEB 13 2009 12:59

Total Wind Gen: 80.0 MW
Gross Lingan 648.0 MW
Gross Pt Aconi 195.0 MW

Gross Tupper 165.0 MW
Gross Trenton 330.0 MW
Gross Tuft's Cove 395.4 MW

Gross Wreck Cove 50.0 MW
Gross Gas Turbine 0.0 MW
Gross Small Hydro 22.5 MW

Net Stora Load 33.7 MW
Total BMPC Load 0.0 MW

Figure 62A

Total Wind Gen: 80.0 MW | Gross Tupper 165.0 MW | Gross Wreck Cove 50.0 MW

Gross Lingan 648.0 MW | Gross Trenton 330.0 MW | Gross Gas Turbine 0.0 MW

Gross Pt Aconi 195.0 MW | Gross Tuft's Cove 395.4 MW | Gross Small Hydro 22.5 MW

Net Stora Load 33.7 MW | Total BMPC Load 0.0 MW

NSX 289.4 MW

CBX 729.6 MW

ONI 956.4 MW

ONS 554.5 MW

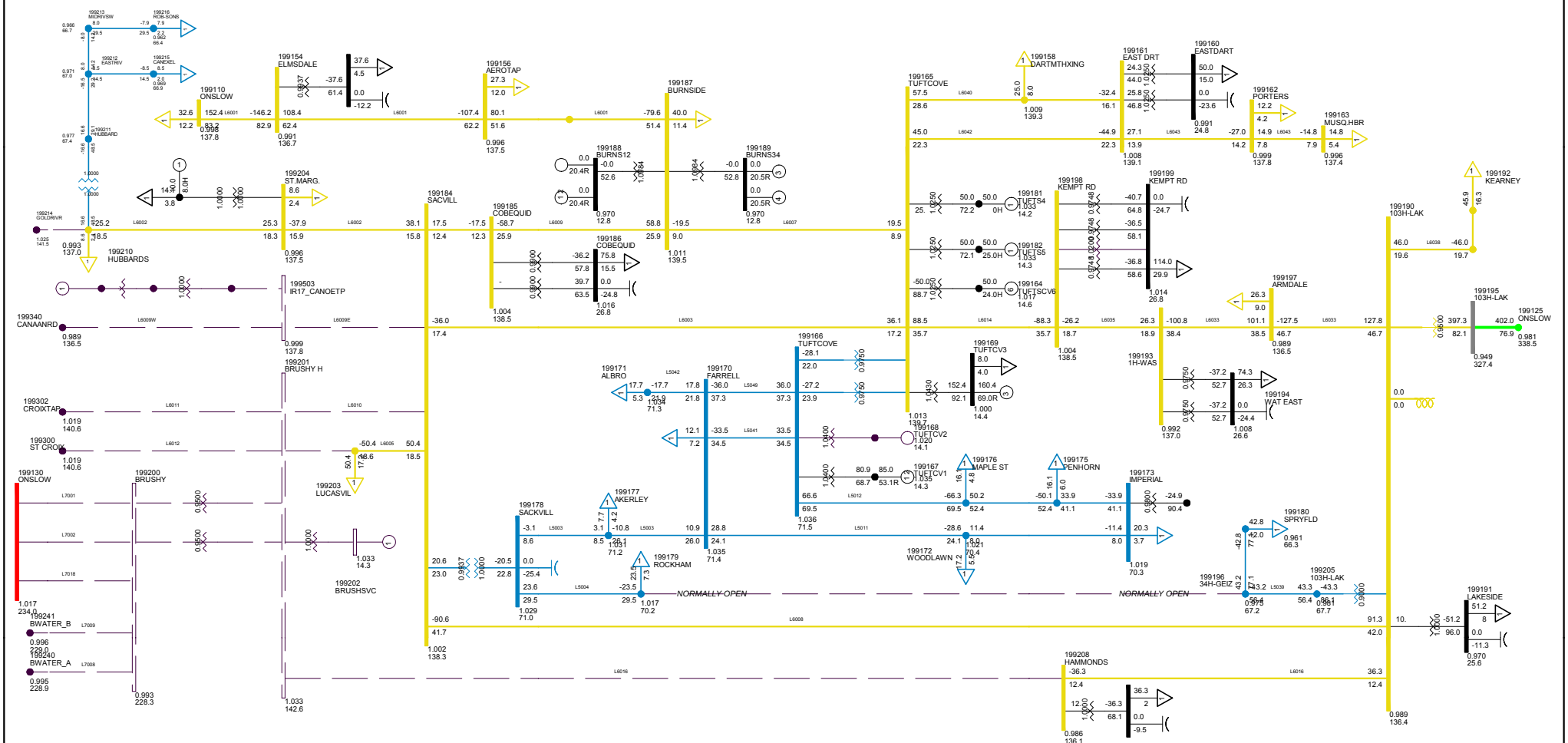

2013 WINTER PEAK STORA MIN
LOSE ALL BRUSHY HILL
METRO ZONE FRI, FEB 13 2009 12:59

Bus - VOLTAGE (KV/PU)
Branch - MW/% OF RATE B
Equipment - MW/MVAR
110.0%RATEB
1.050OV 0.950UV
KV: <=30.000 <=69.000 <=138.000 <=230.000 <=345.000 >345.000

Figure 62B

Figure 63

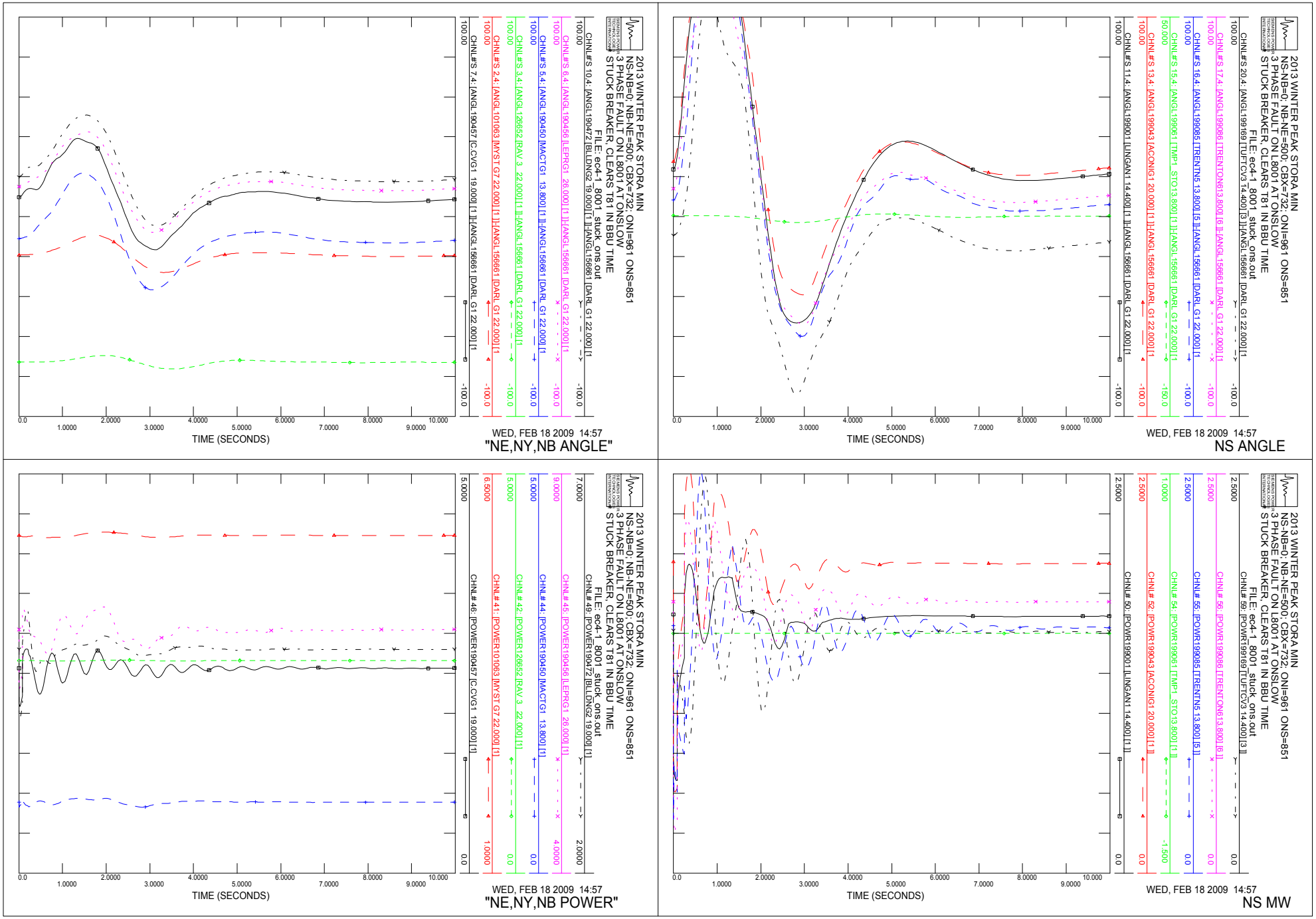
2013 WINTER PEAK STORA MIN
NS-NB=0; NB-NE=500; CBX=732; ONI=961 ONS=851
3 PHASE FAULT ON L8001 AT ONSLOW
STUCK BREAKER, CLEARS T81 IN BBU TIME
FILE: ec4-1_8001_stuck_ons.out
CHNL# 20.4: [ANGL199169 [TUFTCV3 14.400] [3]] [ANGL156661 [DARL G1 22.000] [1]
CHNL# 17.4: [ANGL199086 [TRENTON613.800] [6]] [ANGL156661 [DARL G1 22.000] [1]
CHNL# 16.4: [ANGL199085 [TRENTN5 13.800] [5]] [ANGL156661 [DARL G1 22.000] [1]
CHNL# 15.4: [ANGL199061 [TMP1 STO13.800] [1]] [ANGL156661 [DARL G1 22.000] [1]
CHNL# 13.4: [ANGL199043 [ACONIG1 20.000] [1]] [ANGL156661 [DARL G1 22.000] [1]
CHNL# 11.4: [ANGL199001 [LINGAN1 14.400] [1]] [ANGL156661 [DARL G1 22.000] [1]
100.00
-100.0
50.000
-150.0
0.0
1.0000
2.0000
3.0000
4.0000
5.0000
6.0000
7.0000
8.0000
9.0000
10.000
TIME (SECONDS)
WED, FEB 18 2009 14:57
NS ANGLE
CHNL# 59: [POWER199169 [TUFTCV3 14.400] [3]]
CHNL# 56: [POWER199086 [TRENTON613.800] [6]]
CHNL# 55: [POWER199085 [TRENTN5 13.800] [5]]
CHNL# 54: [POWER199061 [TMP1 STO13.800] [1]]
CHNL# 52: [POWER199043 [ACONIG1 20.000] [1]]
CHNL# 50: [POWER199001 [LINGAN1 14.400] [1]]
2.5000
-1.500
NS MW
CHNL# 49: [POWER190472 [BLLDNG2 19.000] [1]]
CHNL# 45: [POWER190456 [LEPRG1 26.000] [1]]
CHNL# 44: [POWER190450 [MACTG1 13.800] [1]]
CHNL# 42: [POWER126652 [RAV 3 22.000] [1]]
CHNL# 41: [POWER101063 [MYST G7 22.000] [1]]
CHNL# 46: [POWER190457 [C.CVG1 19.000] [1]]
7.0000
9.0000
5.0000
6.5000
4.0000
1.0000
"NE,NY,NB POWER"
CHNL# 10.4: [ANGL190472 [BLLDNG2 19.000] [1]] [ANGL156661 [DARL G1 22.000] [1]
CHNL# 6.4: [ANGL190456 [LEPRG1 26.000] [1]] [ANGL156661 [DARL G1 22.000] [1]
CHNL# 5.4: [ANGL190450 [MACTG1 13.800] [1]] [ANGL156661 [DARL G1 22.000] [1]
CHNL# 3.4: [ANGL126652 [RAV 3 22.000] [1]] [ANGL156661 [DARL G1 22.000] [1]
CHNL# 2.4: [ANGL101063 [MYST G7 22.000] [1]] [ANGL156661 [DARL G1 22.000] [1]
CHNL# 7.4: [ANGL190457 [C.CVG1 19.000] [1]] [ANGL156661 [DARL G1 22.000] [1]
"NE,NY,NB ANGLE"

NSX -1.2 MW

CBX 728.7 MW

ONI 954.5 MW

ONS 845.1 MW

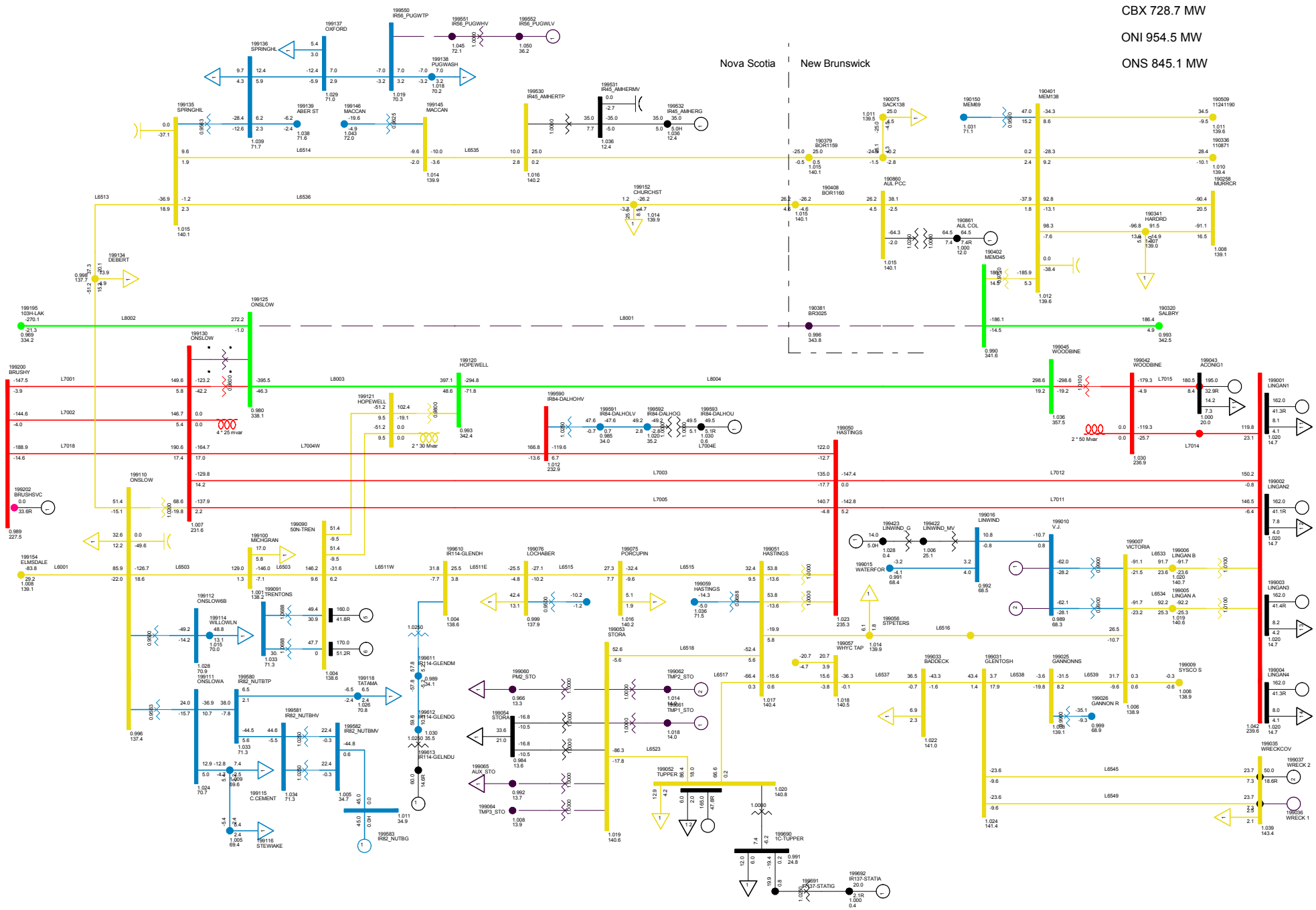

2013 WINTER PEAK STORA MIN
NS-NB=0; NB-NE=500; CBX=732; ONI=961 ONS=851
NORTHEASTERN NS FRI, FEB 13 2009 13:05

Total Wind Gen: 140.6 MW
Gross Lingan 648.0 MW
Gross Pt Aconi 195.0 MW

Gross Tupper 165.0 MW
Gross Trenton 330.0 MW
Gross Tuft's Cove 395.4 MW

Gross Wreck Cove 50.0 MW
Gross Gas Turbine 24.0 MW
Gross Small Hydro 182.4 MW

Net Stora Load 33.7 MW
Total BMPC Load 75.5 MW

Figure 64

Figure 65

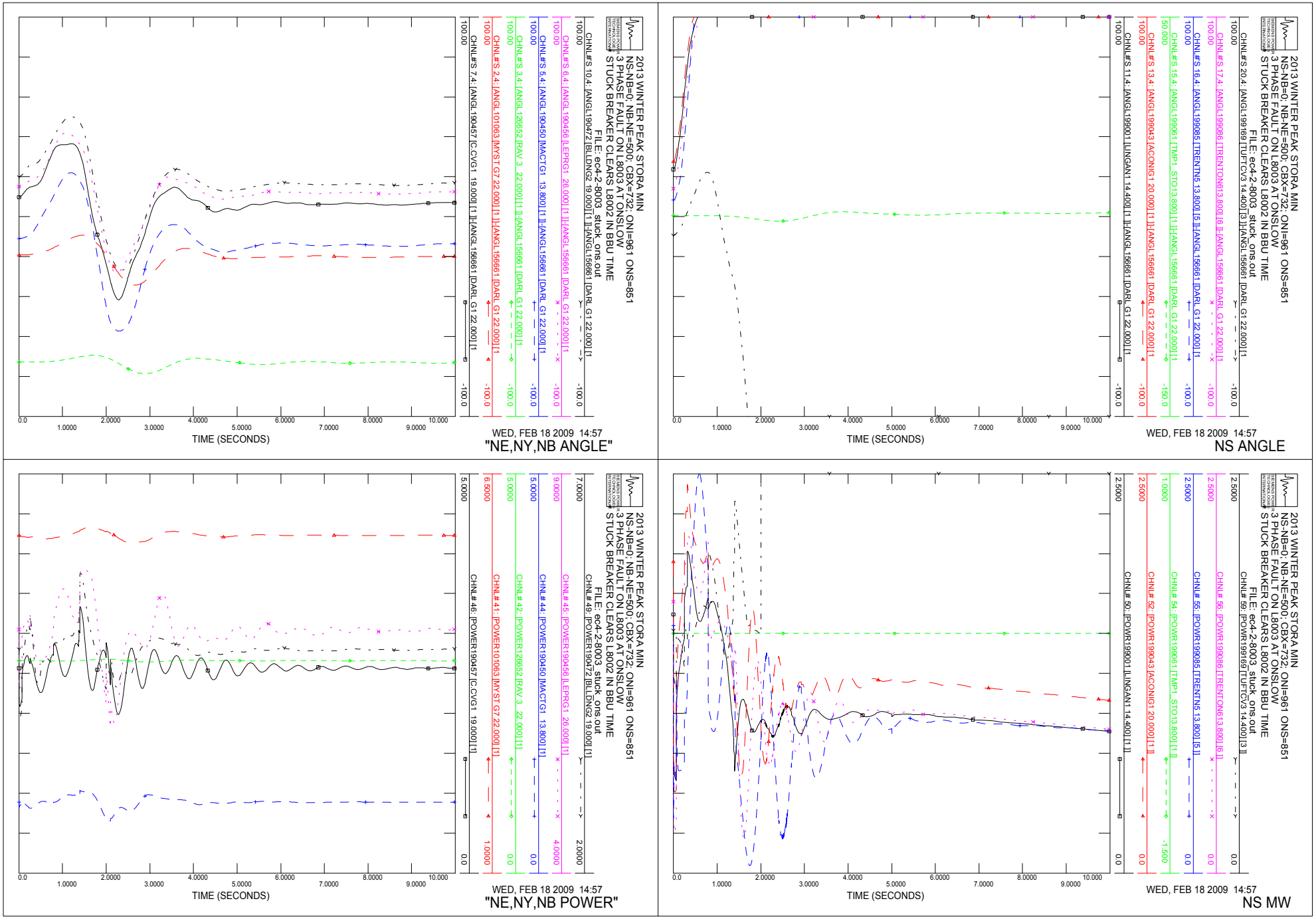
2013 WINTER PEAK STORA MIN
NS-NB=0; NB-NE=500; CBX=732; ONI=961 ONS=851
3 PHASE FAULT ON L8003 AT ONSLOW
STUCK BREAKER CLEARS L8002 IN BBU TIME
FILE: ec4-2-8003_stuck_ons.out
TIME (SECONDS)
WED, FEB 18 2009 14:57
NS ANGLE
NS MW
"NE,NY,NB ANGLE"
"NE,NY,NB POWER"

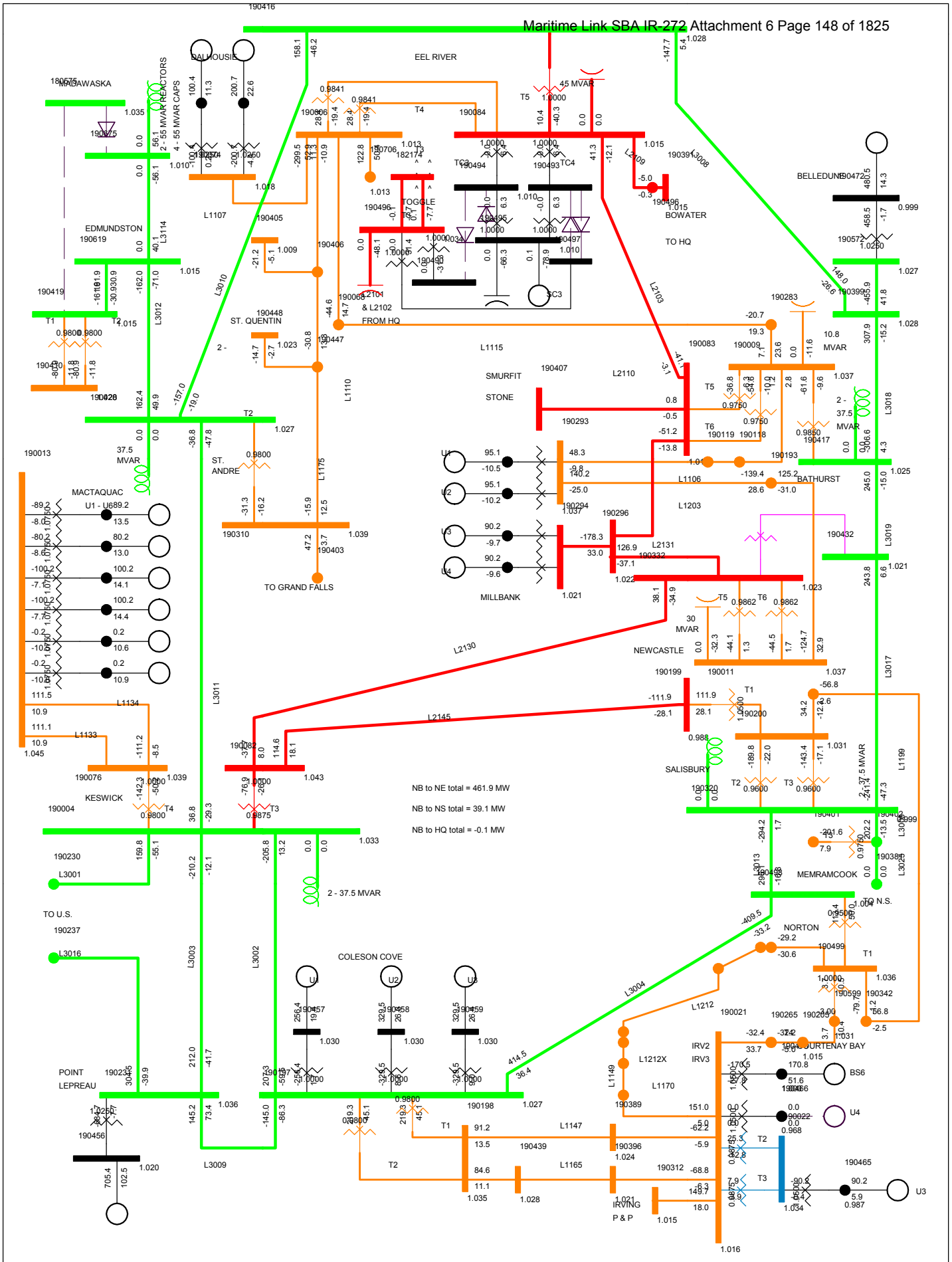

2013 WINTER PEAK STORA MIN
NS-NB=0; NB-NE=500; CBX=732; ONI=961 ONS=851
NB Power WED, FEB 18 2009 15:19

Bus - VOLTAGE (PU)
Branch - MW/MVAR
Equipment - MW/MVAR
100.0%RATEA
1.050OV 0.950UV
KV: <=35.000 <=69.000 <=138.000 <=230.000 <=345.000 >345.000

FIG. 66A

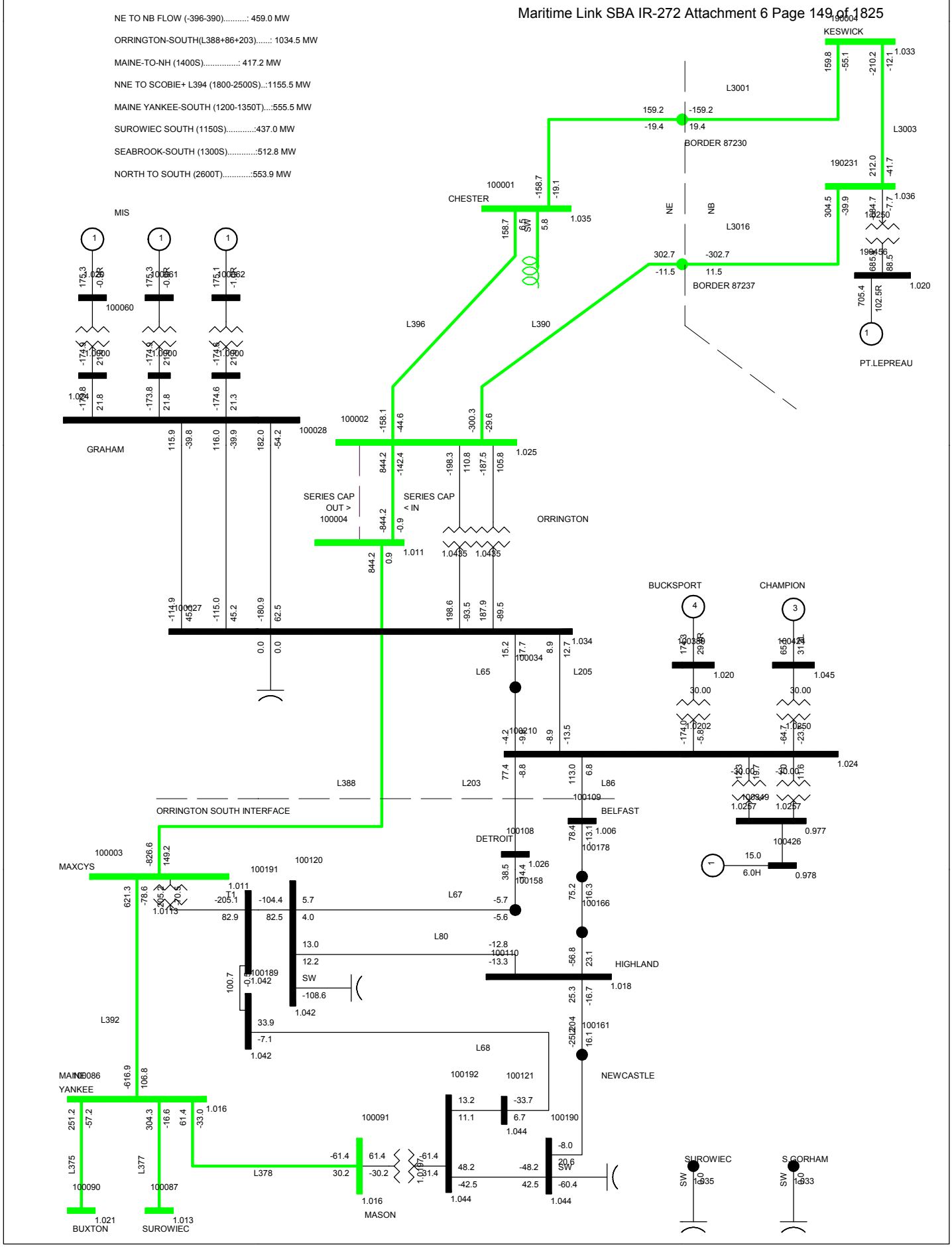

2013 WINTER PEAK STORA MIN
NS-NB=0; NB-NE=500; CBX=732; ONI=961 ONS=851
New England WED, FEB 18 2009 15:26

Bus - VOLTAGE (PU)
Branch - MW/MVAR
Equipment - MW/MVAR

100.0%RATEA
1.055OV 0.950UV
KV: <=138.000 <=230.000 <=345.000 >345.000

FIG.66B

Figure 67

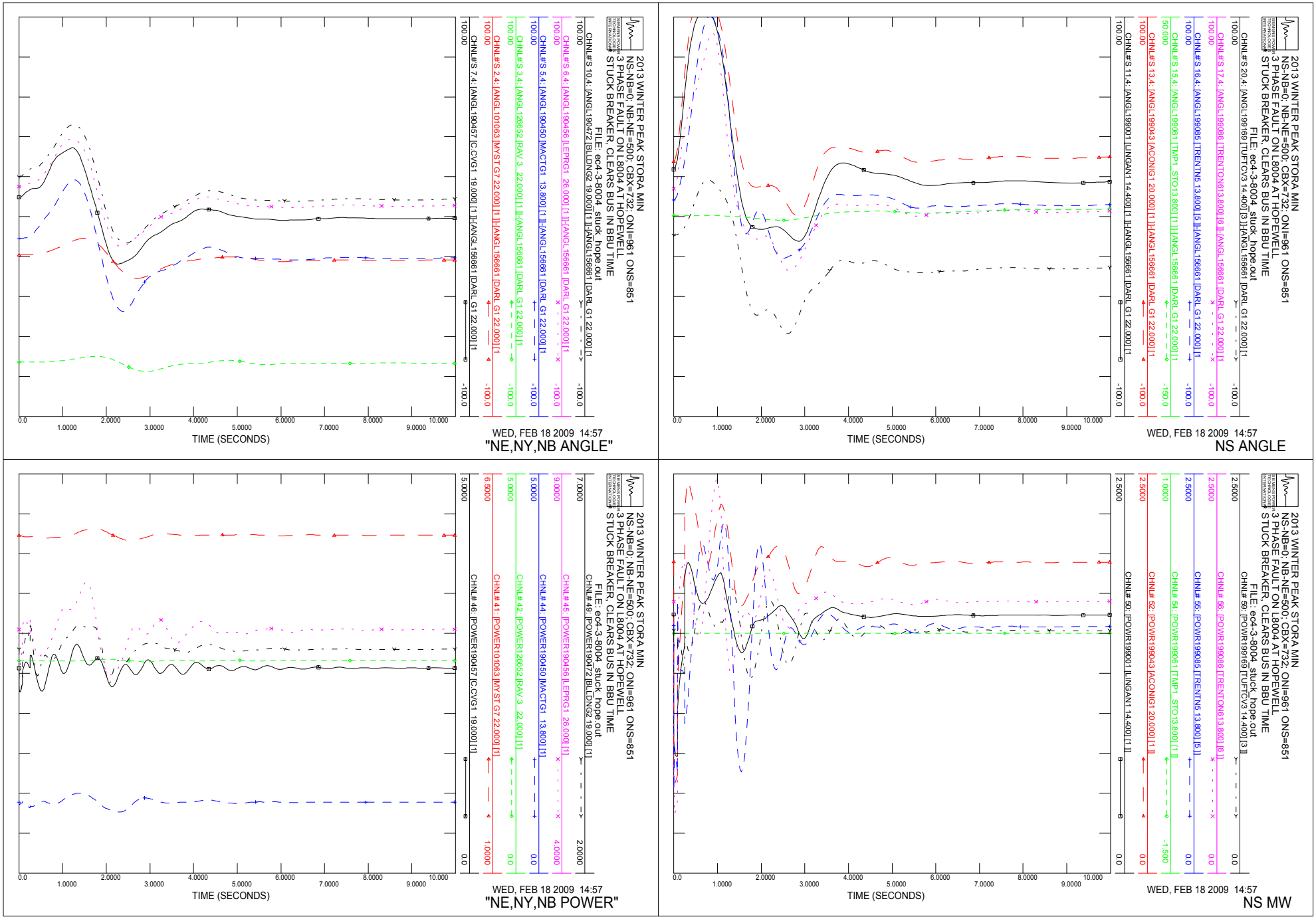
2013 WINTER PEAK STORA MIN
NS-NB=0; NB-NE=500; CBX=732; ONI=961 ONS=851
3 PHASE FAULT ON L8004 AT HOPEWELL
STUCK BREAKER, CLEARS BUS IN BBU TIME
FILE: ec4-3-8004_stuck_hope.out
CHNL# 20: [ANGL199169 [TUFTCV3 14.400] [3]] [ANGL156661 [DARL G1 22.000] [1]
CHNL# 17: [ANGL199086 [TRENTON613.800] [6]] [ANGL156661 [DARL G1 22.000] [1]
CHNL# 16: [ANGL199085 [TRENTN5 13.800] [5]] [ANGL156661 [DARL G1 22.000] [1]
CHNL# 15: [ANGL199061 [TMP1 STO13.800] [1]] [ANGL156661 [DARL G1 22.000] [1]
CHNL# 13: [ANGL199043 [ACONIG1 20.000] [1]] [ANGL156661 [DARL G1 22.000] [1]
CHNL# 11: [ANGL199001 [LINGAN1 14.400] [1]] [ANGL156661 [DARL G1 22.000] [1]
100.00
-100.0
50.000
-150.0
0.0
1.0000
2.0000
3.0000
4.0000
5.0000
6.0000
7.0000
8.0000
9.0000
10.000
TIME (SECONDS)
WED, FEB 18 2009 14:57
NS ANGLE
CHNL# 59: [POWER199169 [TUFTCV3 14.400] [3]]
CHNL# 56: [POWER199086 [TRENTON613.800] [6]]
CHNL# 55: [POWER199085 [TRENTN5 13.800] [5]]
CHNL# 54: [POWER199061 [TMP1 STO13.800] [1]]
CHNL# 52: [POWER199043 [ACONIG1 20.000] [1]]
CHNL# 50: [POWER199001 [LINGAN1 14.400] [1]]
2.5000
-1.500
NS MW
CHNL# 10.4: [ANGL190472 [BLDNG2 19.000] [1]] [ANGL156661 [DARL G1 22.000] [1]
CHNL# 6.4: [ANGL190456 [LEPRG1 26.000] [1]] [ANGL156661 [DARL G1 22.000] [1]
CHNL# 5.4: [ANGL190450 [MACTG1 13.800] [1]] [ANGL156661 [DARL G1 22.000] [1]
CHNL# 3.4: [ANGL126652 [RAV 3 22.000] [1]] [ANGL156661 [DARL G1 22.000] [1]
CHNL# 2.4: [ANGL101063 [MYST G7 22.000] [1]] [ANGL156661 [DARL G1 22.000] [1]
CHNL# 7.4: [ANGL190457 [C.CVG1 19.000] [1]] [ANGL156661 [DARL G1 22.000] [1]
"NE,NY,NB ANGLE"
CHNL# 49: [POWER190472 [BLDNG2 19.000] [1]]
CHNL# 45: [POWER190456 [LEPRG1 26.000] [1]]
CHNL# 44: [POWER190450 [MACTG1 13.800] [1]]
CHNL# 42: [POWER126652 [RAV 3 22.000] [1]]
CHNL# 41: [POWER101063 [MYST G7 22.000] [1]]
CHNL# 46: [POWER190457 [C.CVG1 19.000] [1]]
7.0000
9.0000
5.0000
6.5000
1.0000
4.0000
"NE,NY,NB POWER"

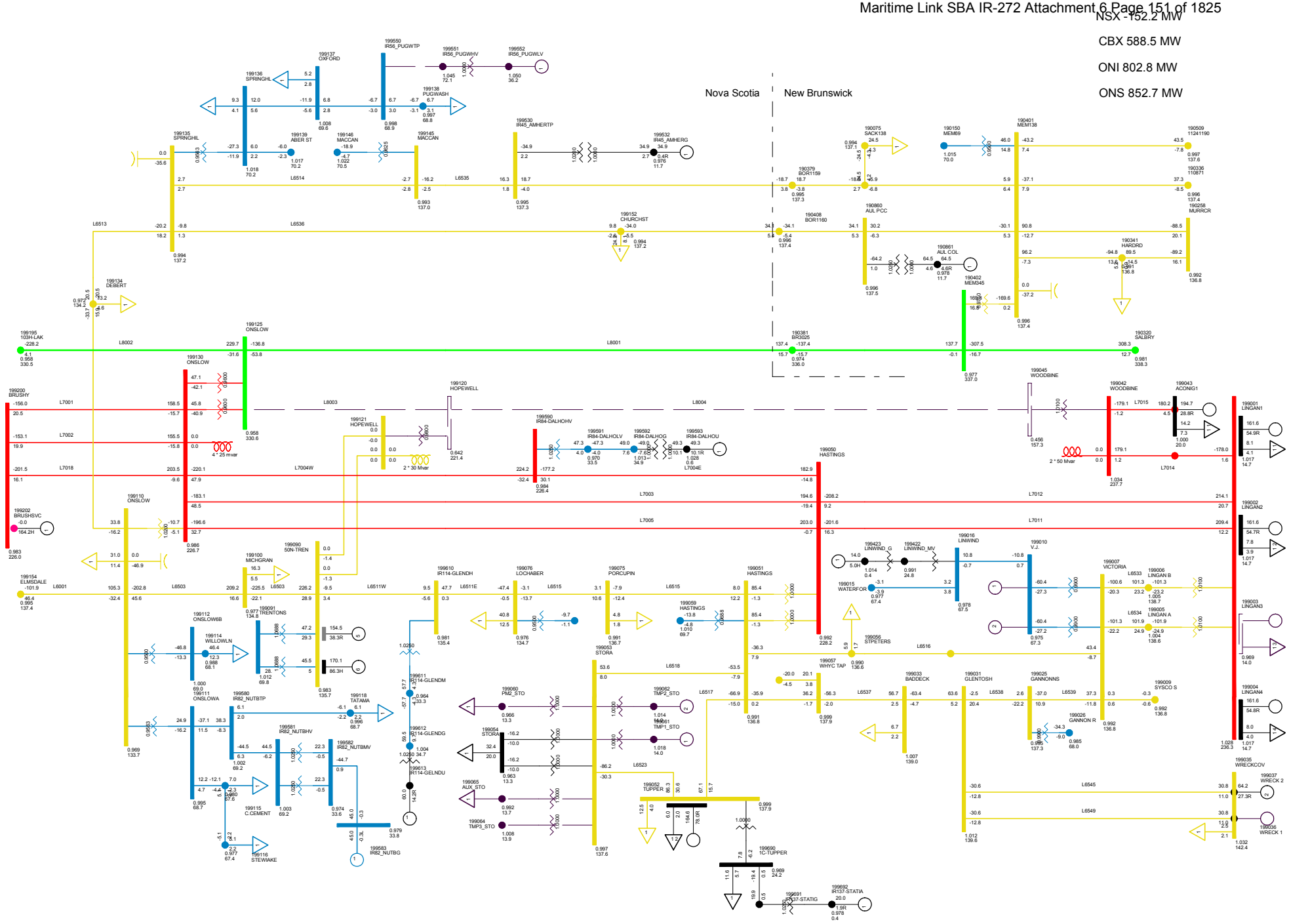

2013 WINTER PEAK STORA MIN
NS-NB=0; NB-NE=500; CBX=732; ONI=961 ONS=851
NORTHEASTERN NS FRI, FEB 13 2009 13:22

Total Wind Gen: 140.0 MW
Gross Lingan 484.8 MW
Gross Pt Aconi 194.7 MW

Gross Tupper 164.6 MW
Gross Trenton 324.6 MW
Gross Tuft's Cove 387.0 MW

Gross Wreck Cove 64.2 MW
Gross Gas Turbine 24.0 MW
Gross Small Hydro 162.5 MW

Net Stora Load 32.5 MW
Total BMPC Load 75.4 MW

Figure 68

Figure 69

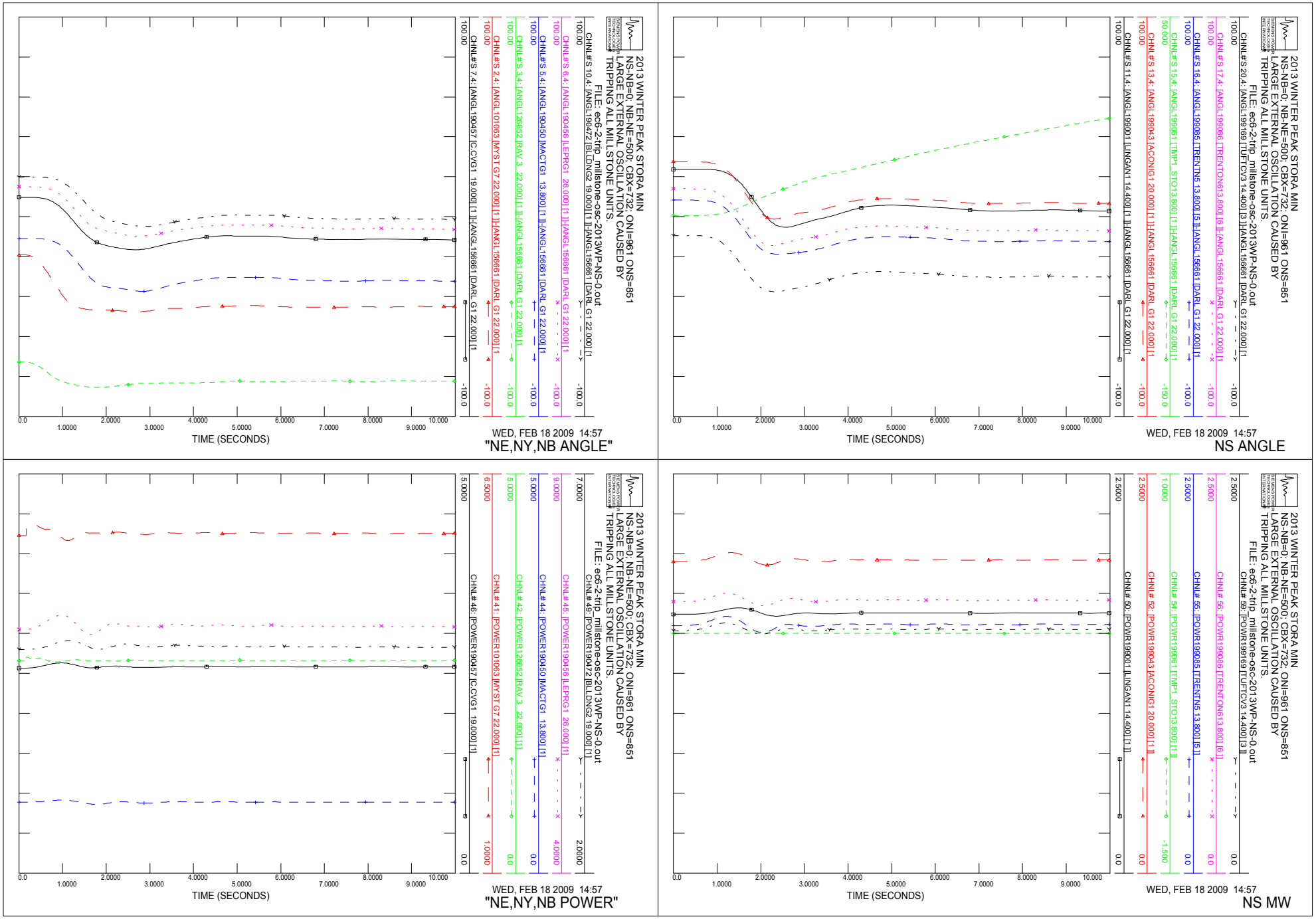
2013 WINTER PEAK STORA MIN
NS-NB=0; NB-NE=500; CBX=732; ONI=961 ONS=851
LARGE EXTERNAL OSCILLATION CAUSED BY
TRIPPING ALL MILLSTONE UNITS.
FILE: ec6-2-trip_millstone-osc-2013WP-NS-0.out
CHNL#S 10,4: [ANGL190472 [BLLDNG2 19.000] [1]]-[ANGL156661 [DARL G1 22.000] [1
CHNL#S 6,4: [ANGL190456 [LEPRG1 26.000] [1]]-[ANGL156661 [DARL G1 22.000] [1
CHNL#S 5,4: [ANGL190450 [MACTG1 13.800] [1]]-[ANGL156661 [DARL G1 22.000] [1
CHNL#S 3,4: [ANGL126652 [RAV 3 22.000] [1]]-[ANGL156661 [DARL G1 22.000] [1
CHNL#S 2,4: [ANGL101063 [MYST G7 22.000] [1]]-[ANGL156661 [DARL G1 22.000] [1
CHNL#S 7,4: [ANGL190457 [C.CVG1 19.000] [1]]-[ANGL156661 [DARL G1 22.000] [1
TIME (SECONDS)
WED, FEB 18 2009 14:57
"NE,NY,NB ANGLE"
2013 WINTER PEAK STORA MIN
NS-NB=0; NB-NE=500; CBX=732; ONI=961 ONS=851
LARGE EXTERNAL OSCILLATION CAUSED BY
TRIPPING ALL MILLSTONE UNITS.
FILE: ec6-2-trip_millstone-osc-2013WP-NS-0.out
CHNL#S 20,4: [ANGL199169 [TUFTCV3 14.400] [3]]-[ANGL156661 [DARL G1 22.000] [1
CHNL#S 17,4: [ANGL199086 [TRENTON613.800] [6]]-[ANGL156661 [DARL G1 22.000] [1
CHNL#S 16,4: [ANGL199085 [TRENTN5 13.800] [5]]-[ANGL156661 [DARL G1 22.000] [1
CHNL#S 15,4: [ANGL199061 [TMP1 STO13.800] [1]]-[ANGL156661 [DARL G1 22.000] [1
CHNL#S 13,4: [ANGL199043 [ACONIG1 20.000] [1]]-[ANGL156661 [DARL G1 22.000] [1
CHNL#S 11,4: [ANGL199001 [LINGAN1 14.400] [1]]-[ANGL156661 [DARL G1 22.000] [1
TIME (SECONDS)
WED, FEB 18 2009 14:57
NS ANGLE
2013 WINTER PEAK STORA MIN
NS-NB=0; NB-NE=500; CBX=732; ONI=961 ONS=851
LARGE EXTERNAL OSCILLATION CAUSED BY
TRIPPING ALL MILLSTONE UNITS.
FILE: ec6-2-trip_millstone-osc-2013WP-NS-0.out
CHNL#49: [POWER190472 [BLLDNG2 19.000] [1]]
CHNL#45: [POWER190456 [LEPRG1 26.000] [1]
CHNL#44: [POWER190450 [MACTG1 13.800] [1]
CHNL#42: [POWER126652 [RAV 3 22.000] [1]
CHNL#41: [POWER101063 [MYST G7 22.000] [1]
CHNL#46: [POWER190457 [C.CVG1 19.000] [1]
TIME (SECONDS)
WED, FEB 18 2009 14:57
"NE,NY,NB POWER"
2013 WINTER PEAK STORA MIN
NS-NB=0; NB-NE=500; CBX=732; ONI=961 ONS=851
LARGE EXTERNAL OSCILLATION CAUSED BY
TRIPPING ALL MILLSTONE UNITS.
FILE: ec6-2-trip_millstone-osc-2013WP-NS-0.out
CHNL#59: [POWR199169 [TUFTCV3 14.400] [3]]
CHNL#56: [POWR199086 [TRENTON613.800] [6]]
CHNL#55: [POWR199085 [TRENTN5 13.800] [5]]
CHNL#54: [POWR199061 [TMP1 STO13.800] [1]]
CHNL#52: [POWR199043 [ACONIG1 20.000] [1]]
CHNL#50: [POWR199001 [LINGAN1 14.400] [1]]
TIME (SECONDS)
WED, FEB 18 2009 14:57
NS MW

Figure 70

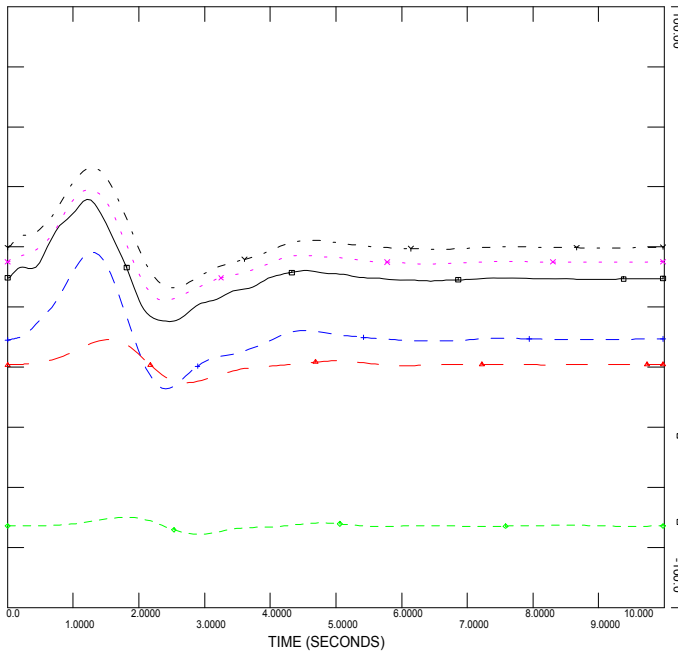
2013 WINTER PEAK STORA MIN
NS-NB=0; NB-NE=500; CBX=732; ONI=961 ONS=851
3 PHASE FAULT ON L8003 AT ONSLOW
CLEARED IN 4.5 CYCLES: NO SPS
FILE: a07.2-3p_8003_67n-2013WP-NS-0.out
CHNL# 20.4: [ANGL199169] [TUFTCV3 14.400] [3] [ANGL156661] [DARL G1 22.000] [1]
CHNL# 17.4: [ANGL199086] [TRENTON613.800] [6]] [ANGL156661] [DARL G1 22.000] [1]
CHNL# 16.4: [ANGL199085] [TRENTN5 13.800] [5]] [ANGL156661] [DARL G1 22.000] [1]
CHNL# 15.4: [ANGL199061] [TMP1 STO13.800] [1]] [ANGL156661] [DARL G1 22.000] [1]
CHNL# 13.4: [ANGL199043] [ACONIG1 20.000] [1]] [ANGL156661] [DARL G1 22.000] [1]
CHNL# 11.4: [ANGL199001] [LINGAN1 14.400] [1]] [ANGL156661] [DARL G1 22.000] [1]
100.00
-100.0
-150.0
0.0
1.0000
2.0000
3.0000
4.0000
5.0000
6.0000
7.0000
8.0000
9.0000
10.000
TIME (SECONDS)
THU, JAN 29 2009 15:50
NS ANGLE

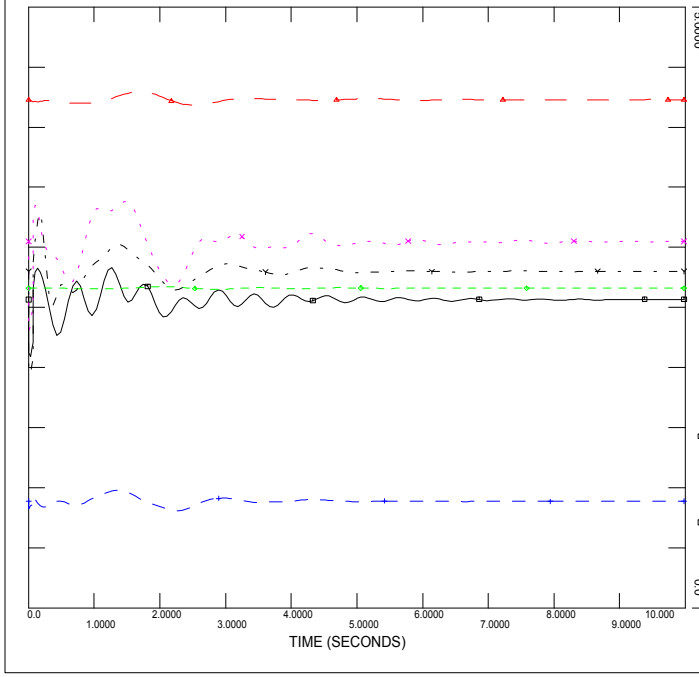
2013 WINTER PEAK STORA MIN
NS-NB=0; NB-NE=500; CBX=732; ONI=961 ONS=851
3 PHASE FAULT ON L8003 AT ONSLOW
CLEARED IN 4.5 CYCLES: NO SPS
FILE: a07.2-3p_8003_67n-2013WP-NS-0.out
CHNL# 10.4: [ANGL190472] [BLLDNG2 19.000] [1]] [ANGL156661] [DARL G1 22.000] [1]
CHNL# 6.4: [ANGL190456] [LEPRG1 26.000] [1]] [ANGL156661] [DARL G1 22.000] [1]
CHNL# 5.4: [ANGL190450] [MACTG1 13.800] [1]] [ANGL156661] [DARL G1 22.000] [1]
CHNL# 3.4: [ANGL126652] [RAV 3 22.000] [1]] [ANGL156661] [DARL G1 22.000] [1]
CHNL# 2.4: [ANGL101063] [MYST G7 22.000] [1]] [ANGL156661] [DARL G1 22.000] [1]
CHNL# 7.4: [ANGL190457] [C.CVG1 19.000] [1]] [ANGL156661] [DARL G1 22.000] [1]
100.00
-100.0
0.0
1.0000
2.0000
3.0000
4.0000
5.0000
6.0000
7.0000
8.0000
9.0000
10.000
TIME (SECONDS)
THU, JAN 29 2009 15:50
"NE,NY,NB ANGLE"

2013 WINTER PEAK STORA MIN
NS-NB=0; NB-NE=500; CBX=732; ONI=961 ONS=851
3 PHASE FAULT ON L8003 AT ONSLOW
CLEARED IN 4.5 CYCLES: NO SPS
FILE: a07.2-3p_8003_67n-2013WP-NS-0.out
CHNL# 59: [POWR199169] [TUFTCV3 14.400] [3]]
CHNL# 56: [POWR199086] [TRENTON613.800] [6]]
CHNL# 55: [POWR199085] [TRENTN5 13.800] [5]]
CHNL# 54: [POWR199061] [TMP1 STO13.800] [1]]
CHNL# 52: [POWR199043] [ACONIG1 20.000] [1]]
CHNL# 50: [POWR199001] [LINGAN1 14.400] [1]]
2.5000
0.0
-1.500
1.0000
2.0000
3.0000
4.0000
5.0000
6.0000
7.0000
8.0000
9.0000
10.000
TIME (SECONDS)
THU, JAN 29 2009 15:50
NS MW

2013 WINTER PEAK STORA MIN
NS-NB=0; NB-NE=500; CBX=732; ONI=961 ONS=851
3 PHASE FAULT ON L8003 AT ONSLOW
CLEARED IN 4.5 CYCLES: NO SPS
FILE: a07.2-3p_8003_67n-2013WP-NS-0.out
CHNL# 49: [POWER190472] [BLLDNG2 19.000] [1]
CHNL# 45: [POWER190456] [LEPRG1 26.000] [1]
CHNL# 44: [POWER190450] [MACTG1 13.800] [1]
CHNL# 42: [POWER126652] [RAV 3 22.000] [1]
CHNL# 41: [POWER101063] [MYST G7 22.000] [1]
CHNL# 46: [POWER190457] [C.CVG1 19.000] [1]
7.0000
2.0000
4.0000
0.0
1.0000
5.0000
6.0000
7.0000
8.0000
9.0000
10.000
TIME (SECONDS)
THU, JAN 29 2009 15:50
"NE,NY,NB POWER"

Figure 71

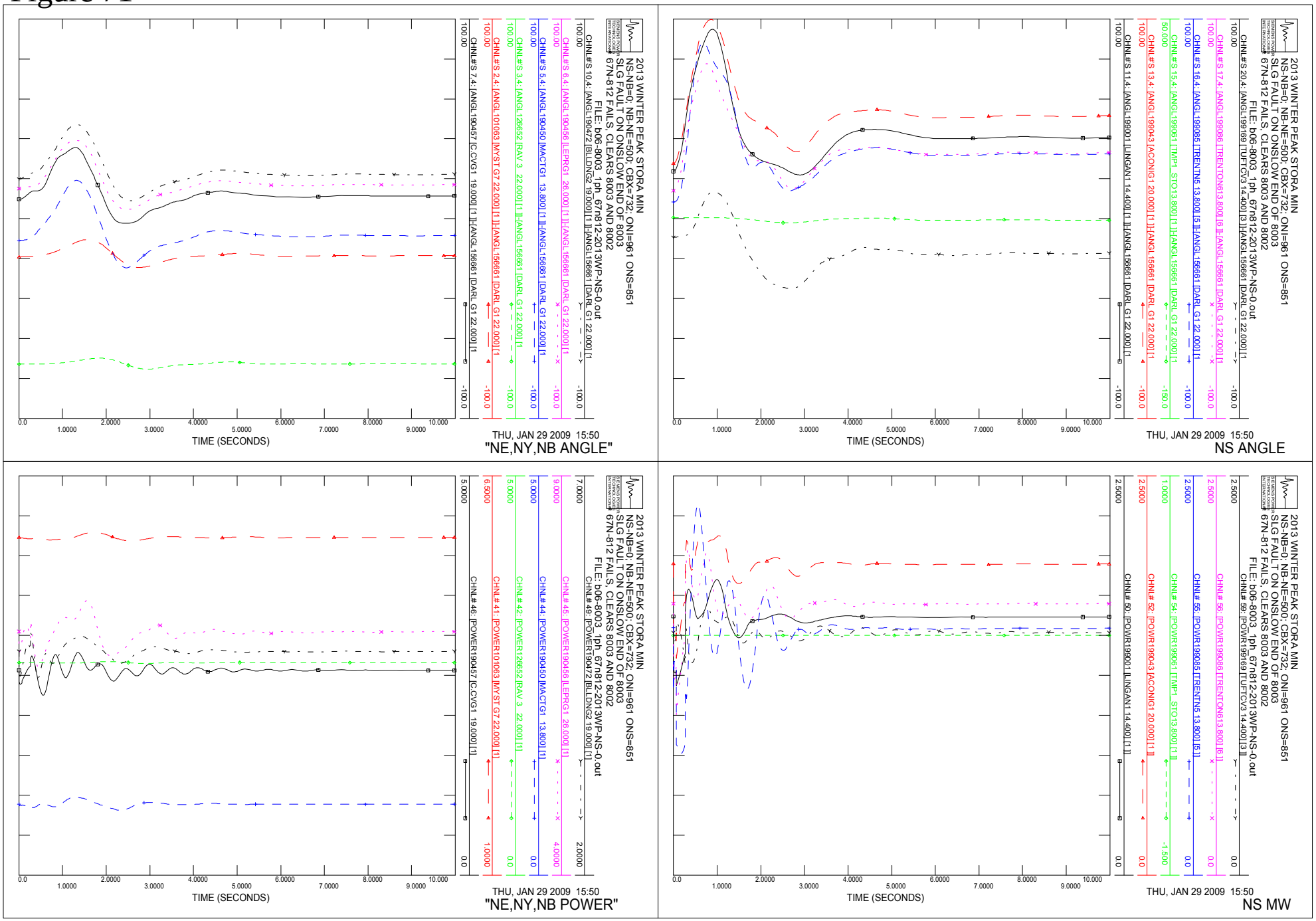
2013 WINTER PEAK STORA MIN
NS-NB=0; NB-NE=500; CBX=732; ONI=961 ONS=851
SLG FAULT ON ONSLOW END OF 8003
67N-812 FAILS, CLEARS 8003 AND 8002
FILE: b06-8003_1ph_67n812-2013WP-NS-0.out
CHNL# 20.4: [ANGL199169 [TUFTCV3 14.400] [3]] [ANGL156661 [DARL G1 22.000] [1
CHNL# 17.4: [ANGL199086 [TRENTON613.800] [6]] [ANGL156661 [DARL G1 22.000] [1
CHNL# 16.4: [ANGL199085 [TRENTN5 13.800] [5]] [ANGL156661 [DARL G1 22.000] [1
CHNL# 15.4: [ANGL199061 [TMP1 STO13.800] [1]] [ANGL156661 [DARL G1 22.000] [1
CHNL# 13.4: [ACONIG1 20.000] [1]] [ANGL156661 [DARL G1 22.000] [1
CHNL# 11.4: [ANGL199001 [LINGAN1 14.400] [1]] [ANGL156661 [DARL G1 22.000] [1
TIME (SECONDS)
THU, JAN 29 2009 15:50
NS ANGLE
2013 WINTER PEAK STORA MIN
NS-NB=0; NB-NE=500; CBX=732; ONI=961 ONS=851
SLG FAULT ON ONSLOW END OF 8003
67N-812 FAILS, CLEARS 8003 AND 8002
FILE: b06-8003_1ph_67n812-2013WP-NS-0.out
CHNL# 10.4: [ANGL190472 [BLLDNG2 19.000] [1]] [ANGL156661 [DARL G1 22.000] [1
CHNL# 6.4: [ANGL190456 [LEPRG1 26.000] [1]] [ANGL156661 [DARL G1 22.000] [1
CHNL# 5.4: [ANGL190450 [MACTG1 13.800] [1]] [ANGL156661 [DARL G1 22.000] [1
CHNL# 3.4: [ANGL126652 [RAV 3 22.000] [1]] [ANGL156661 [DARL G1 22.000] [1
CHNL# 2.4: [ANGL101063 [MYST G7 22.000] [1]] [ANGL156661 [DARL G1 22.000] [1
CHNL# 7.4: [ANGL190457 [C.CVG1 19.000] [1]] [ANGL156661 [DARL G1 22.000] [1
TIME (SECONDS)
THU, JAN 29 2009 15:50
"NE,NY,NB ANGLE"
2013 WINTER PEAK STORA MIN
NS-NB=0; NB-NE=500; CBX=732; ONI=961 ONS=851
SLG FAULT ON ONSLOW END OF 8003
67N-812 FAILS, CLEARS 8003 AND 8002
FILE: b06-8003_1ph_67n812-2013WP-NS-0.out
CHNL# 59: [POWER199169 [TUFTCV3 14.400] [3]]
CHNL# 56: [POWER199086 [TRENTON613.800] [6]]
CHNL# 55: [POWER199085 [TRENTN5 13.800] [5]]
CHNL# 54: [POWER199061 [TMP1 STO13.800] [1]]
CHNL# 52: [POWER199043 [ACONIG1 20.000] [1]]
CHNL# 50: [POWER199001 [LINGAN1 14.400] [1]]
TIME (SECONDS)
THU, JAN 29 2009 15:50
NS MW
2013 WINTER PEAK STORA MIN
NS-NB=0; NB-NE=500; CBX=732; ONI=961 ONS=851
SLG FAULT ON ONSLOW END OF 8003
67N-812 FAILS, CLEARS 8003 AND 8002
FILE: b06-8003_1ph_67n812-2013WP-NS-0.out
CHNL# 49: [POWER190472 [BLLDNG2 19.000] [1]]
CHNL# 45: [POWER190456 [LEPRG1 26.000] [1]]
CHNL# 44: [POWER190450 [MACTG1 13.800] [1]]
CHNL# 42: [POWER126652 [RAV 3 22.000] [1]]
CHNL# 41: [POWER101063 [MYST G7 22.000] [1]]
CHNL# 46: [POWER190457 [C.CVG1 19.000] [1]]
TIME (SECONDS)
THU, JAN 29 2009 15:50
"NE,NY,NB POWER"

NSX 0.0 MW

CBX 729.1 MW

ONI 955.4 MW

ONS 845.1 MW

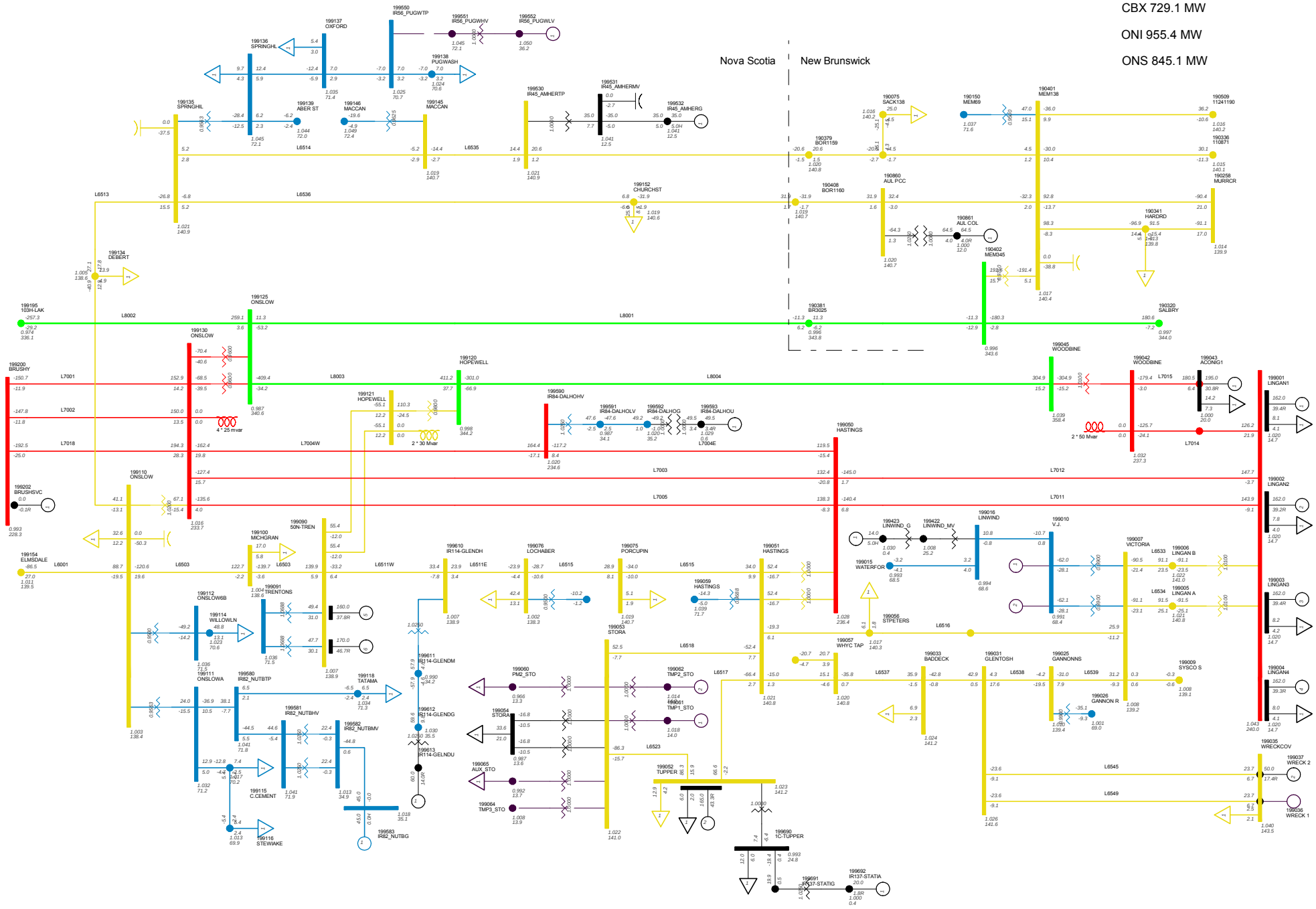

2013 WINTER PEAK STORA MIN NS-NB=0; NB-NE=500; CBX=732; ONI=961 ONS=851 NORTHEASTERN NS FRI, FEB 13 2009 15:20	Total Wind Gen: 140.6 MW Gross Lingan 648.0 MW Gross Pt Aconi 195.0 MW	Gross Tupper 165.0 MW Gross Trenton 330.0 MW Gross Tuft's Cove 395.4 MW	Gross Wreck Cove 50.0 MW Gross Gas Turbine 24.0 MW Gross Small Hydro 182.4 MW	Net Stora Load 33.7 MW Total BMPC Load 75.5 MW	Figure 72A

Total Wind Gen: 140.6 MW | Gross Tupper 165.0 MW | Gross Wreck Cove 50.0 MW

Gross Lingan 648.0 MW | Gross Trenton 330.0 MW | Gross Gas Turbine 24.0 MW

Gross Pt Aconi 195.0 MW | Gross Tuft's Cove 395.4 MW | Gross Small Hydro 182.4 MW

Net Stora Load 33.7 MW | Total BMPC Load 75.5 MW

NSX 0.0 MW

CBX 729.1 MW

ONI 955.4 MW

ONS 845.1 MW

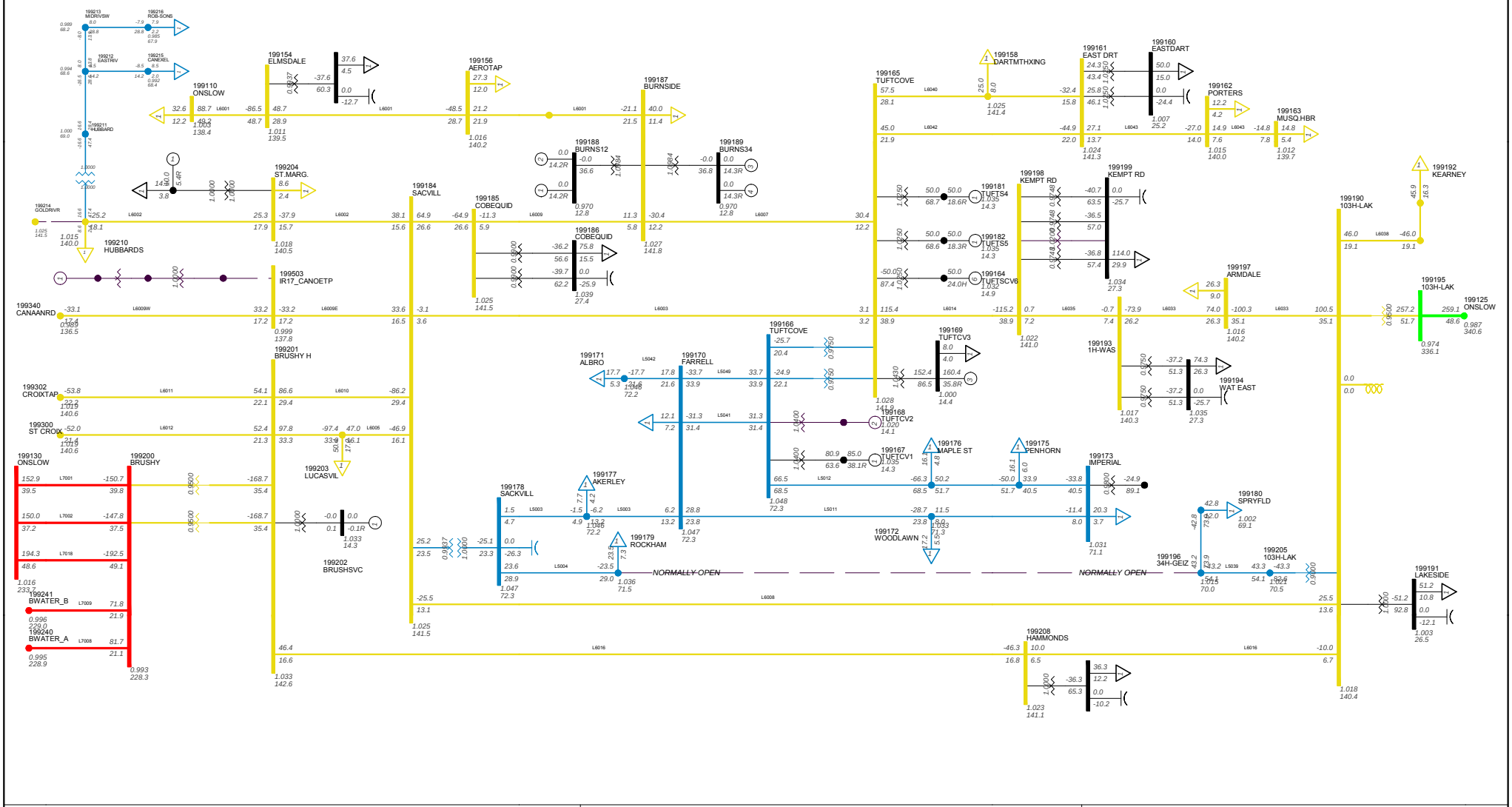

2013 WINTER PEAK STORA MIN
NS-NB=0; NB-NE=500; CBX=732; ONI=961 ONS=851
METRO ZONE FRI, FEB 13 2009 15:20

Bus - VOLTAGE (KV/PU)
Branch - MW/% OF RATE B
Equipment - MW/MVAR
110.0%/RATE B
1.0500V 0.950UV
KV: <=30.000 <=69.000 <=138.000 <=230.000 <=345.000 >345.000

Figure 72B

NSX 0.0 MW

CBX 660.2 MW

ONI 819.4 MW

ONS 708.7 MW

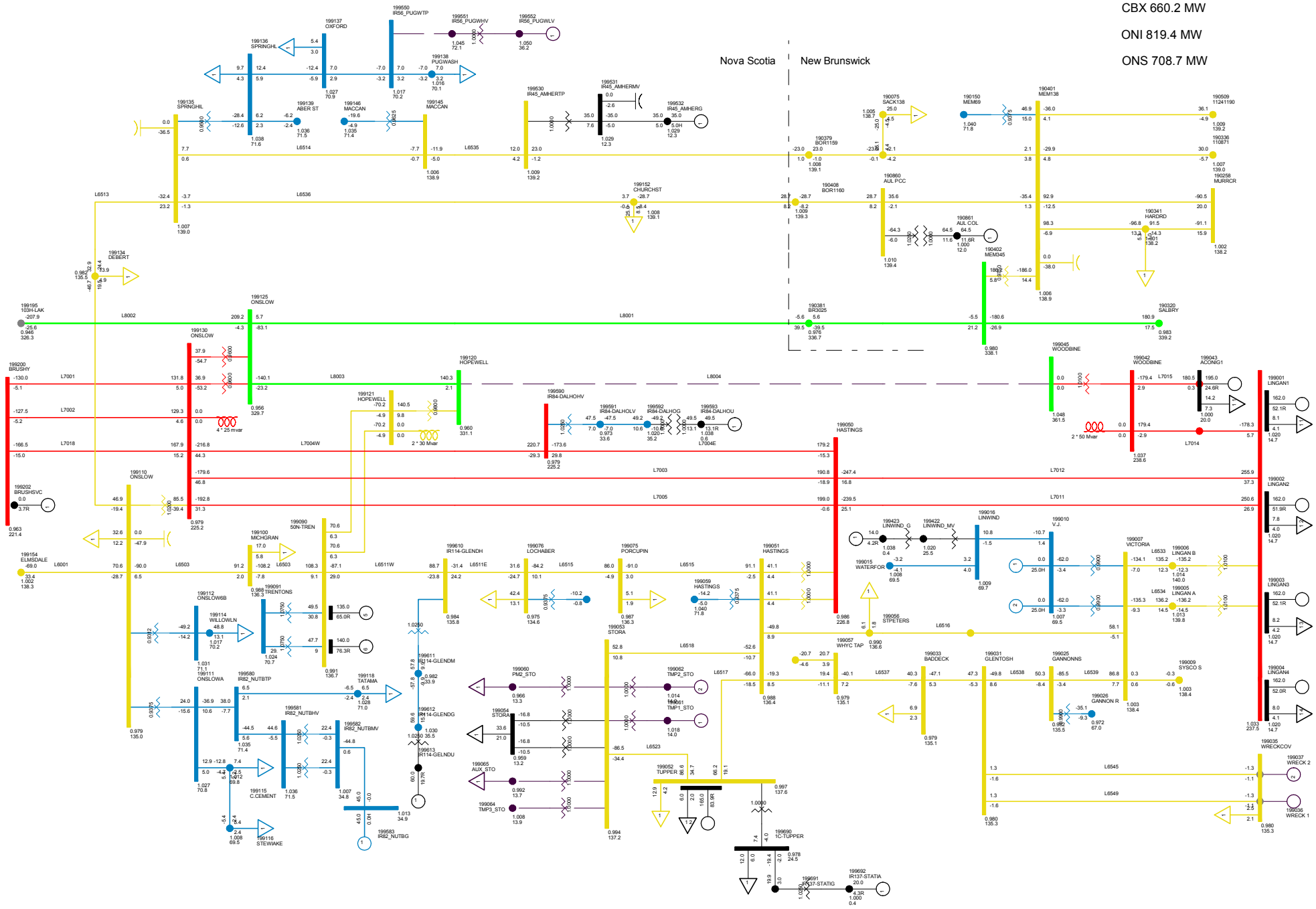

2013 WINTER PEAKL8004 OUT N-1
NS-NB=0; NB-NE=500; CBX=660 ONI=819 ONS=709
NORTHEASTERN NS FRI, FEB 13 2009 15:16

Total Wind Gen: 140.6 MW
Gross Lingan 648.0 MW
Gross Pt Aconi 195.0 MW

Gross Tupper 165.0 MW
Gross Trenton 275.0 MW
Gross Tuft's Cove 330.2 MW

Gross Wreck Cove 0.0 MW
Gross Gas Turbine 156.0 MW
Gross Small Hydro 182.4 MW

Net Stora Load 33.7 MW
Total BMPC Load 9.5 MW

Figure 73A

Total Wind Gen: 140.6 MW | Gross Tupper 165.0 MW | Gross Wreck Cove 0.0 MW

Gross Lingan 648.0 MW | Gross Trenton 275.0 MW | Gross Gas Turbine 156.0 MW

Gross Pt Aconi 195.0 MW | Gross Tuft's Cove 330.2 MW | Gross Small Hydro 182.4 MW

Net Stora Load 33.7 MW | Total BMPC Load 9.5 MW

NSX 0.0 MW

CBX 660.2 MW

ONI 819.4 MW

ONS 708.7 MW

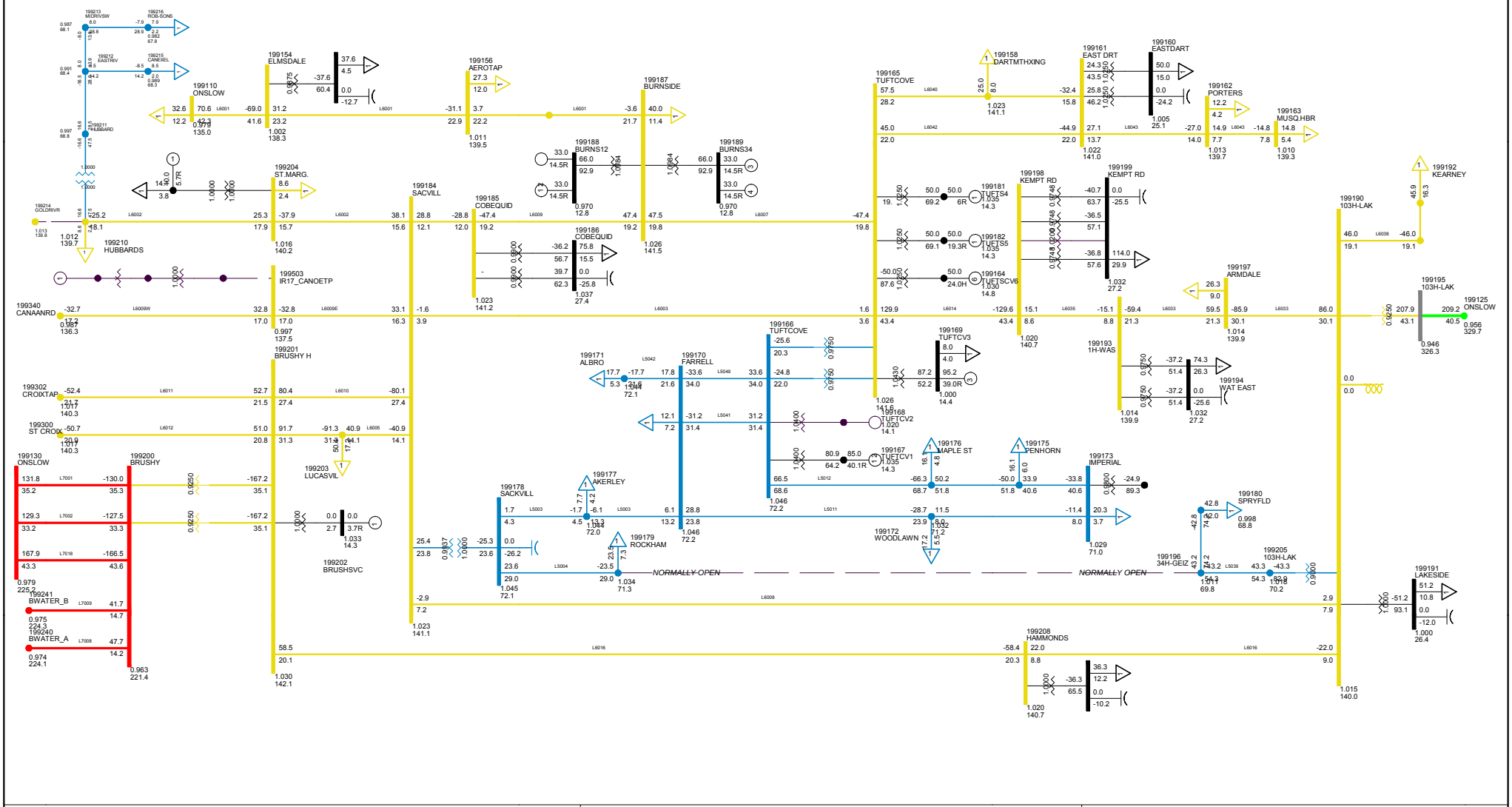

2013 WINTER PEAKL8004 OUT N-1
NS-NB=0; NB-NE=500; CBX=660 ONI=819 ONS=709
METRO ZONE FRI, FEB 13 2009 15:16

Bus - VOLTAGE (KV/PU)
Branch - MW/% OF RATE B
Equipment - MW/MVAR
110.0%/RATE B
1.050OV 0.950UV
KV: <=30.000 <=69.000 <=138.000 <=230.000 <=345.000 >345.000

Figure 73B

Figure 74

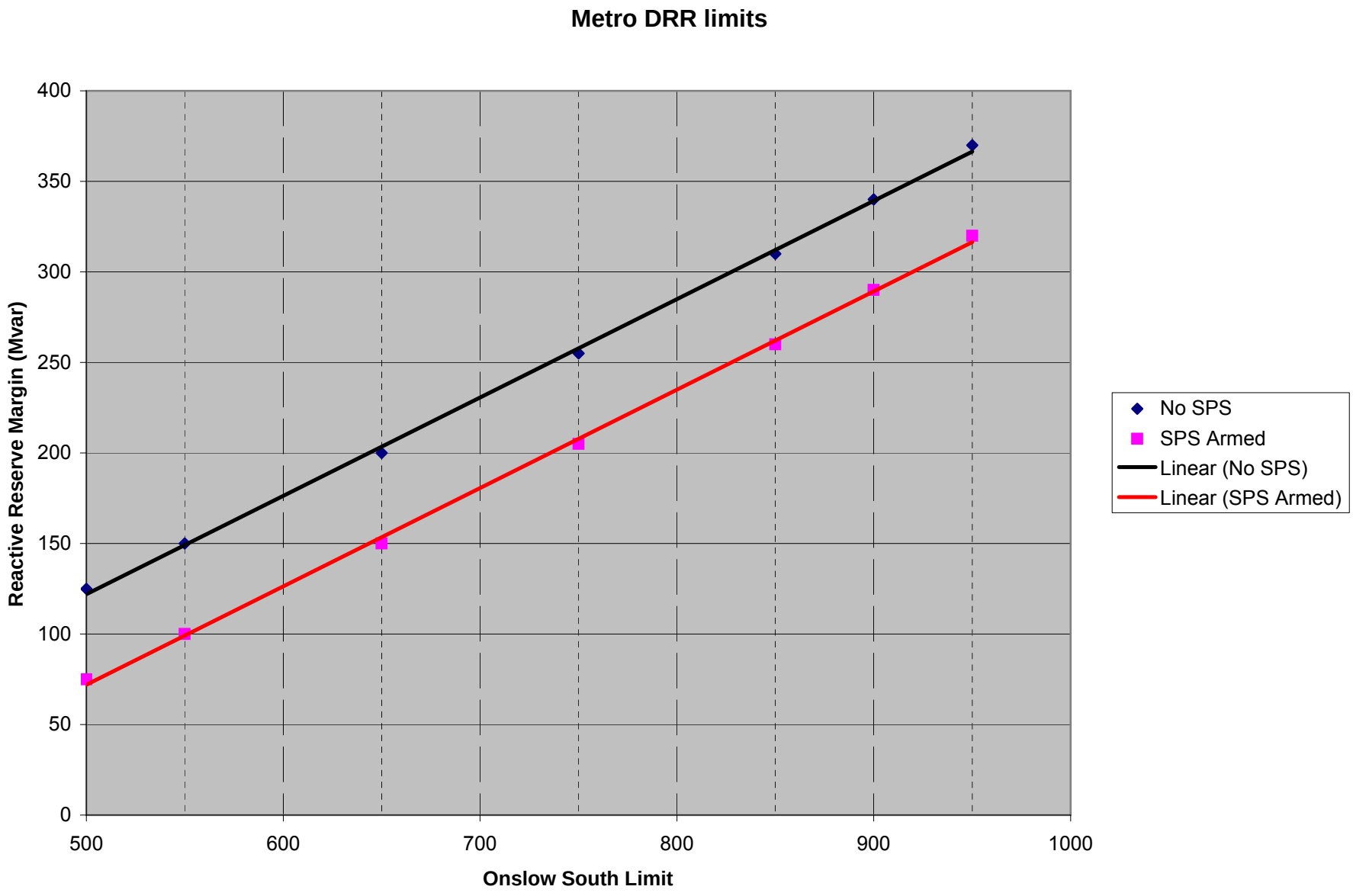
Metro DRR limits
Reactive Reserve Margin (Mvar)
400
350
300
250
200
150
100
50
0
500
600
700
800
900
1000
Onslow South Limit
No SPS
SPS Armed
Linear (No SPS)
Linear (SPS Armed)

Total Wind Gen: 140.6 MW | Gross Tupper 165.0 MW | Gross Wreck Cove 50.0 MW

Gross Lingan 648.0 MW | Gross Trenton 330.0 MW | Gross Gas Turbine 24.0 MW

Gross Pt Aconi 195.0 MW | Gross Tuft's Cove 398.9 MW | Gross Small Hydro 182.4 MW

Net Stora Load 33.7 MW | Total BMPC Load 75.5 MW

NSX 0.0 MW

CBX 729.1 MW

ONI 955.4 MW

ONS 845.0 MW

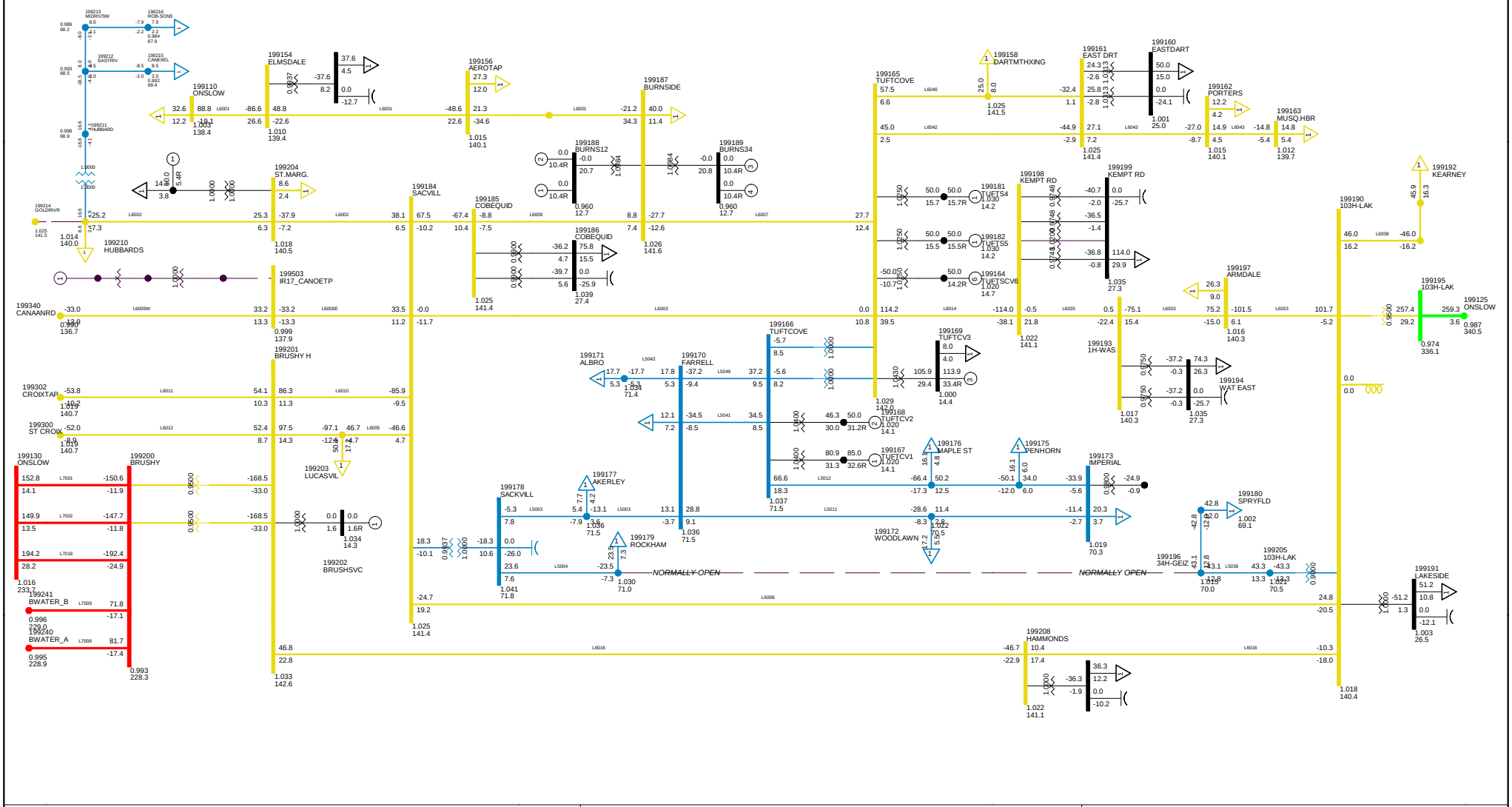

2013 WINTER PEAK STORA MIN
NS-NB=0; NB-NE=500; CBX=732; ONI=961 ONS=851
METRO ZONE WED, FEB 18 2009 16:02

Figure 75

Total Wind Gen: 140.6 MW | Gross Tupper 165.0 MW | Gross Wreck Cove 0.0 MW

Gross Lingan 648.0 MW | Gross Trenton 270.0 MW | Gross Gas Turbine 90.0 MW

Gross Pt Aconi 195.0 MW | Gross Tuft's Cove 435.4 MW | Gross Small Hydro 182.4 MW

Net Stora Load 33.7 MW | Total BMPC Load 75.5 MW

NSX 0.1 MW

CBX 679.6 MW

ONI 850.1 MW

ONS 739.7 MW

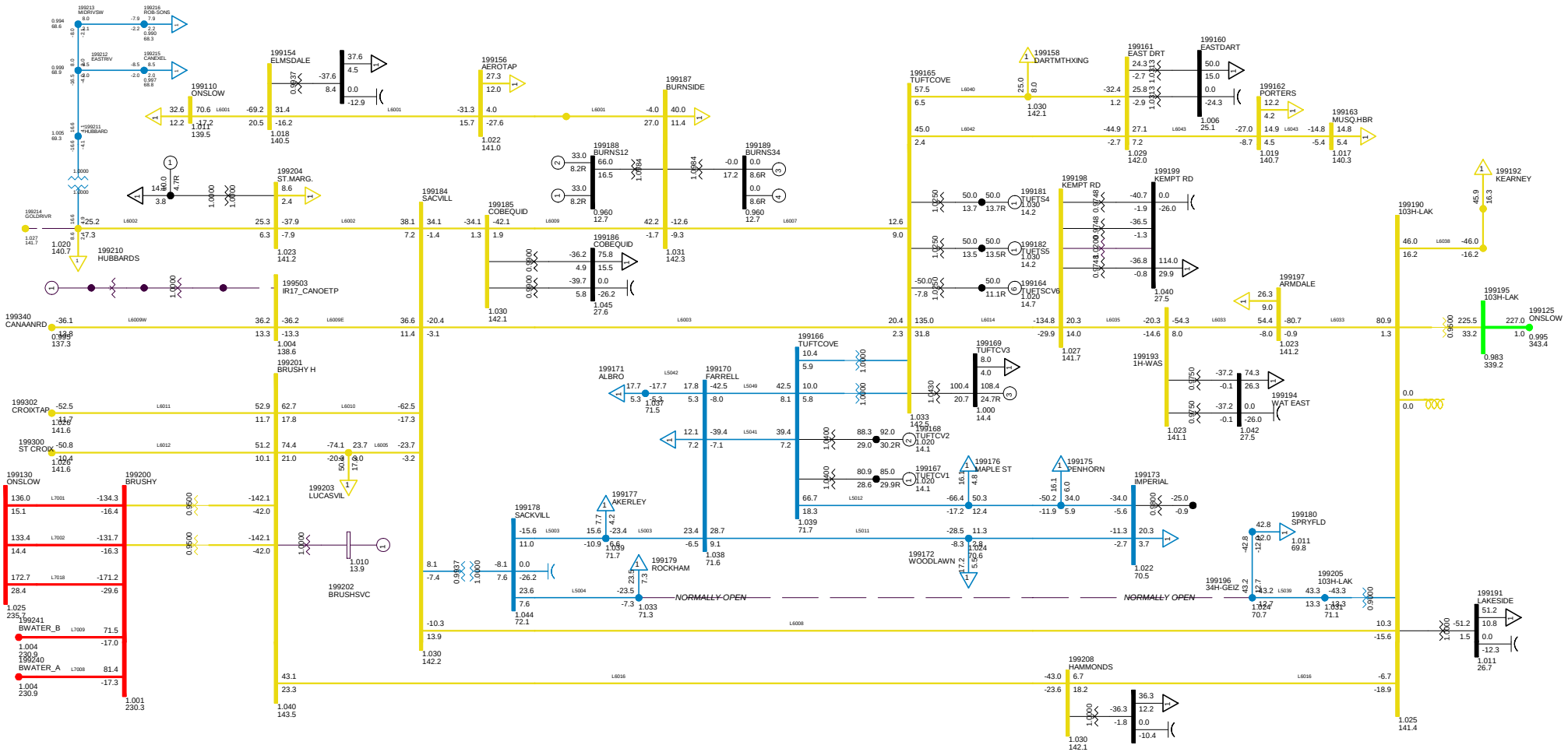

2013 WINTER PEAK STORA MIN
NS-NB=0; NB-NE=500; CBX=732; ONI=961 ONS=851
METRO ZONE WED, FEB 18 2009 15:55

Bus - VOLTAGE (KV/PU)
Branch - MW/MVAR
Equipment - MW/MVAR
100.0MVABTER
1.0500V 0.950UV
KV: <=30.000 <=69.000 <=138.000 <=230.000 <=345.000 >345.000

Figure 76

SIEMENS POWER TECHNOLOGIES INTERNATIONAL

2013 WINTER PEAK MAXIMUM FLOW
NS-NB=0; NB-NE=500; CBX=826; ONI=1050 ONS=939
FAULT ON L8001 AT ONSLOW 345KV
LINE TRIPS I 4.5 SECONDS
FILE: ...\Maxflow-windon\a09-3p_8001_67n-2013WP-NS-0maxflow-windon.out

THU, FEB 19 2009 8:48

FIGURE 77

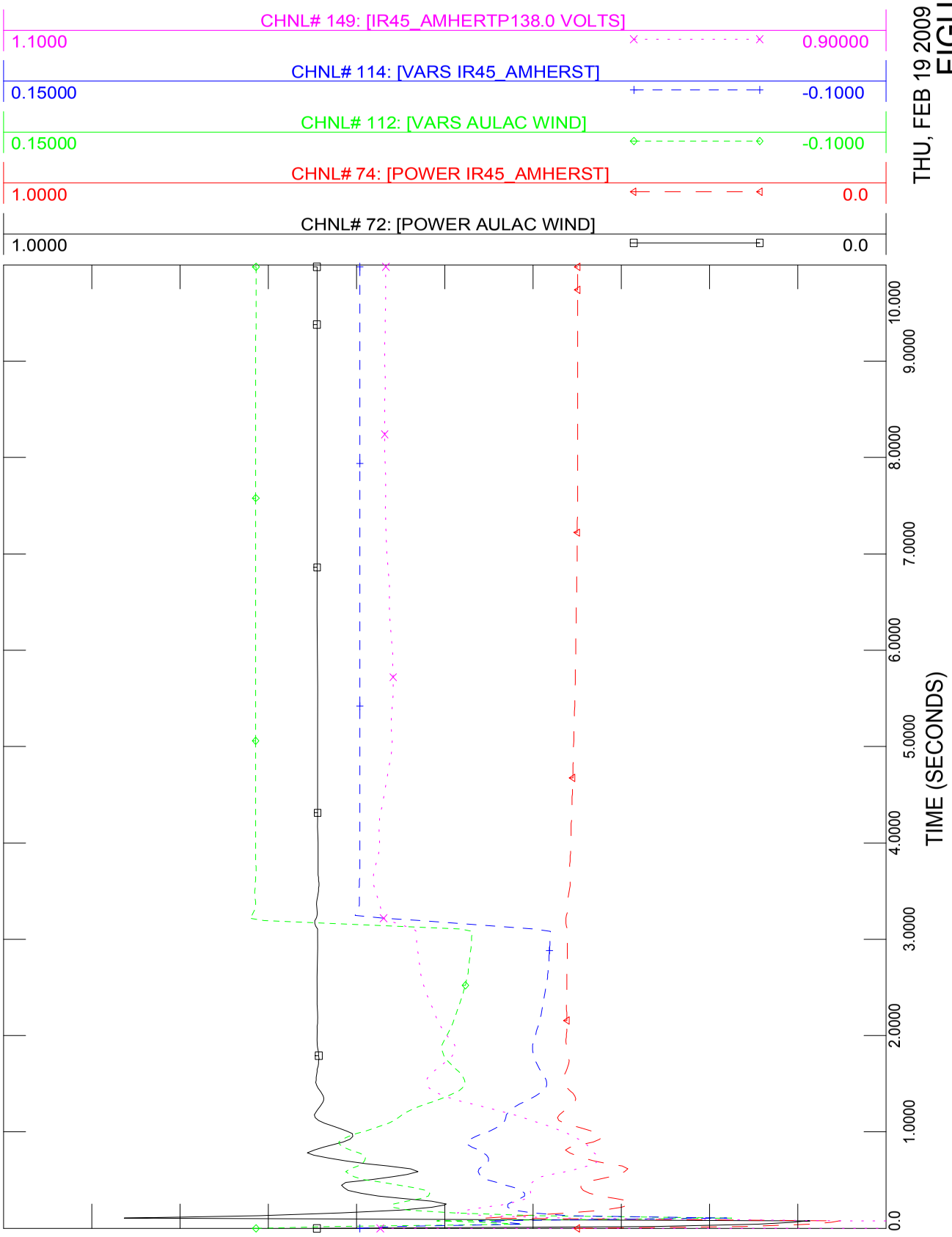

SIEMENS POWER TECHNOLOGIES INTERNATIONAL

2010 SUMMER PEAK, NSLOAD=1700
NS-NB=+200 NB-NE=1000; CBX=777; ONI=1030 ONS=780
FAULT ON L8001 AT ONSLOW 345KV
LINE TRIPS I 4.5 SECONDS
FILE: ...\Summer-NS+200\a09-3p_8001_67n-2013SP-NS+200.out

THU, FEB 19 2009 9:16

FIGURE 78

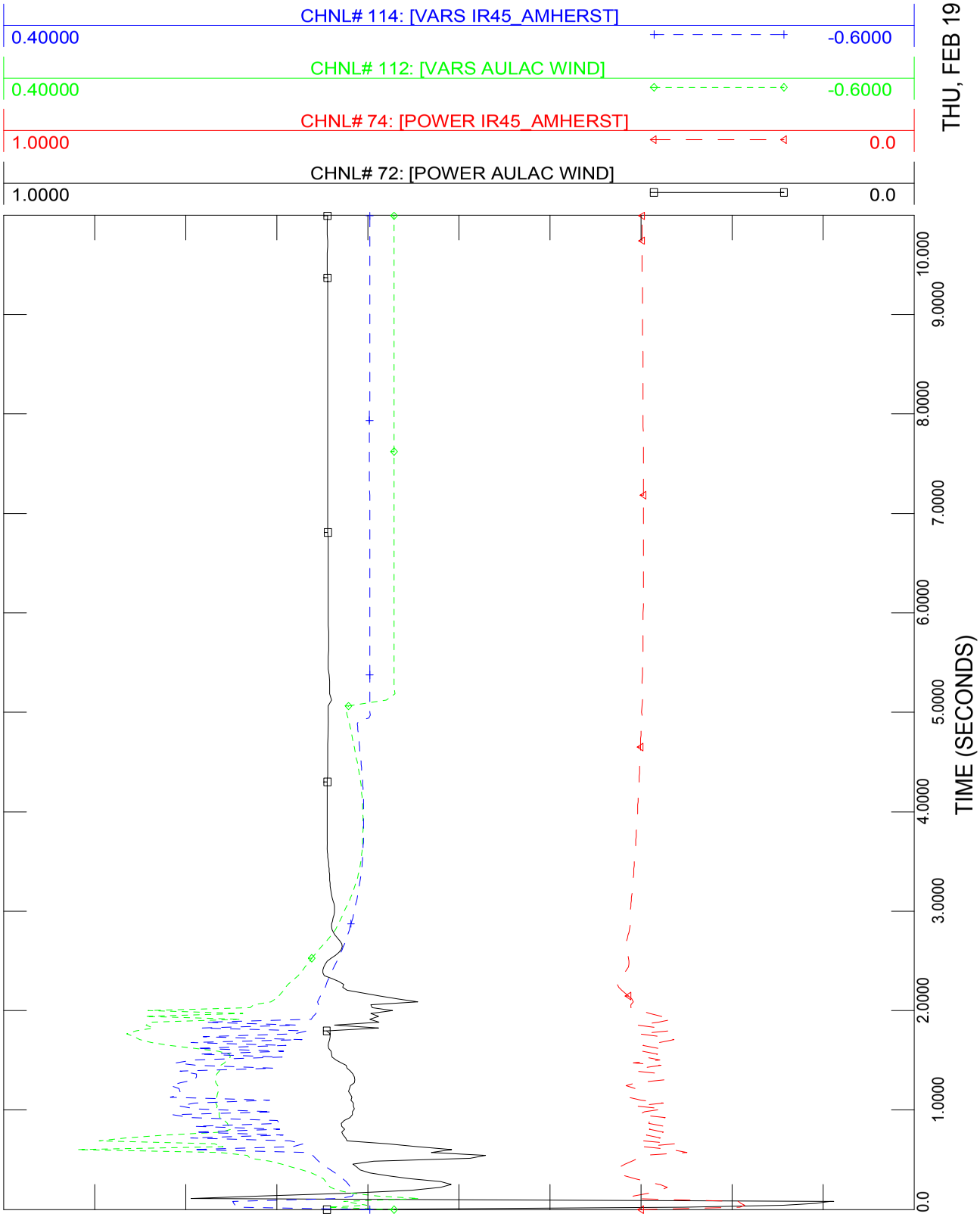

Figure 79 Summer Import UFLS

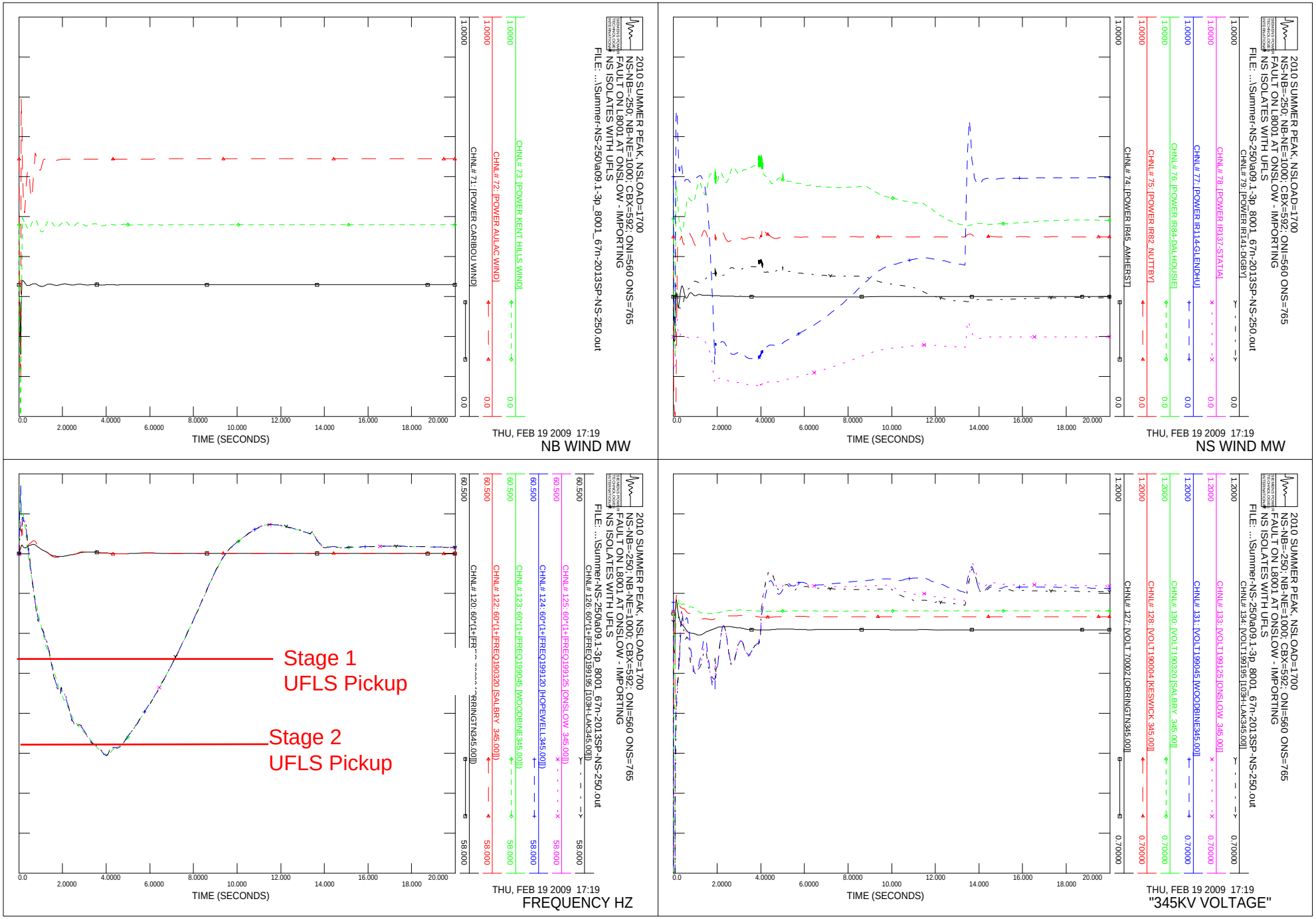

Figure 80 Winter Peak NS Import - UFLS

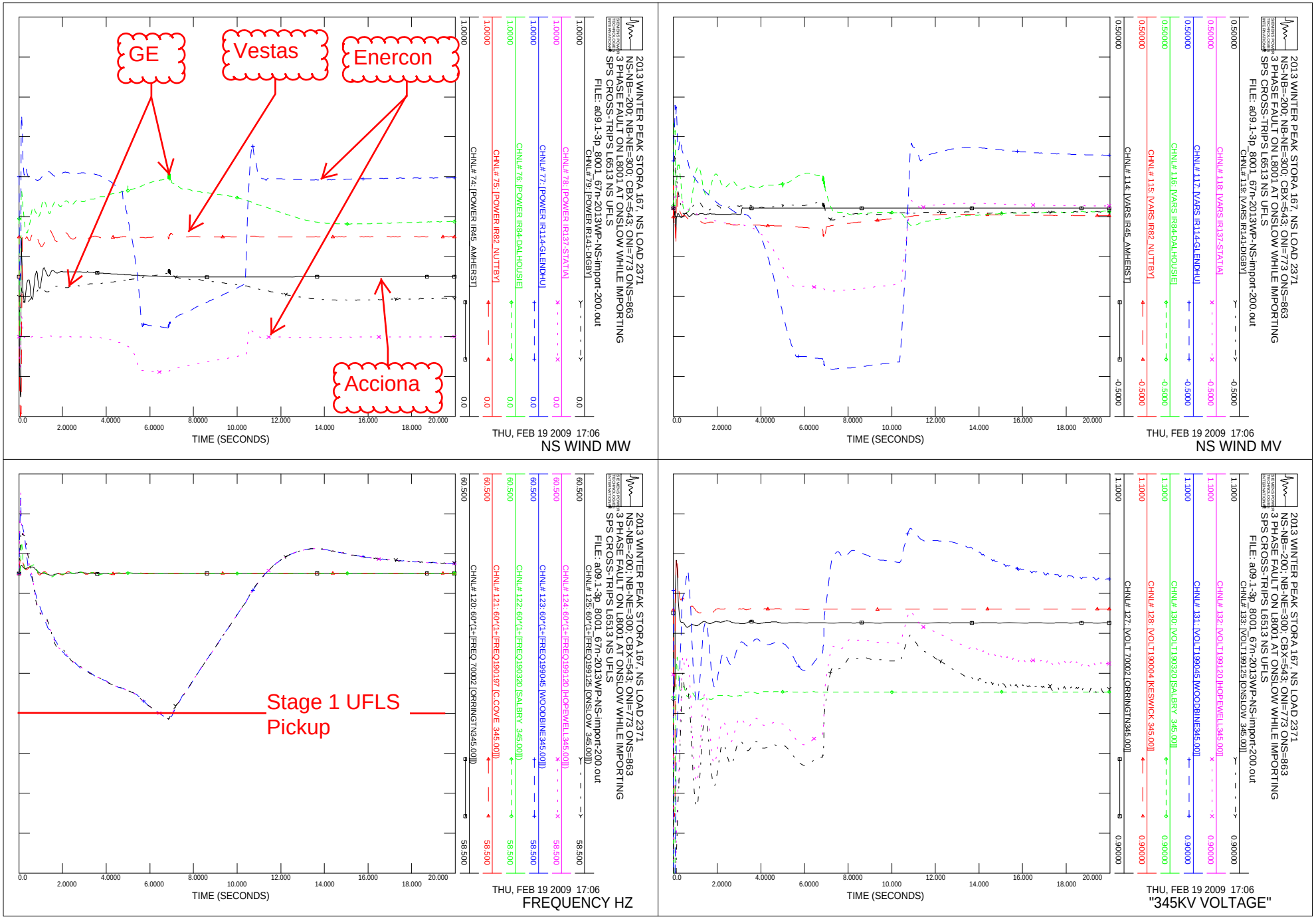

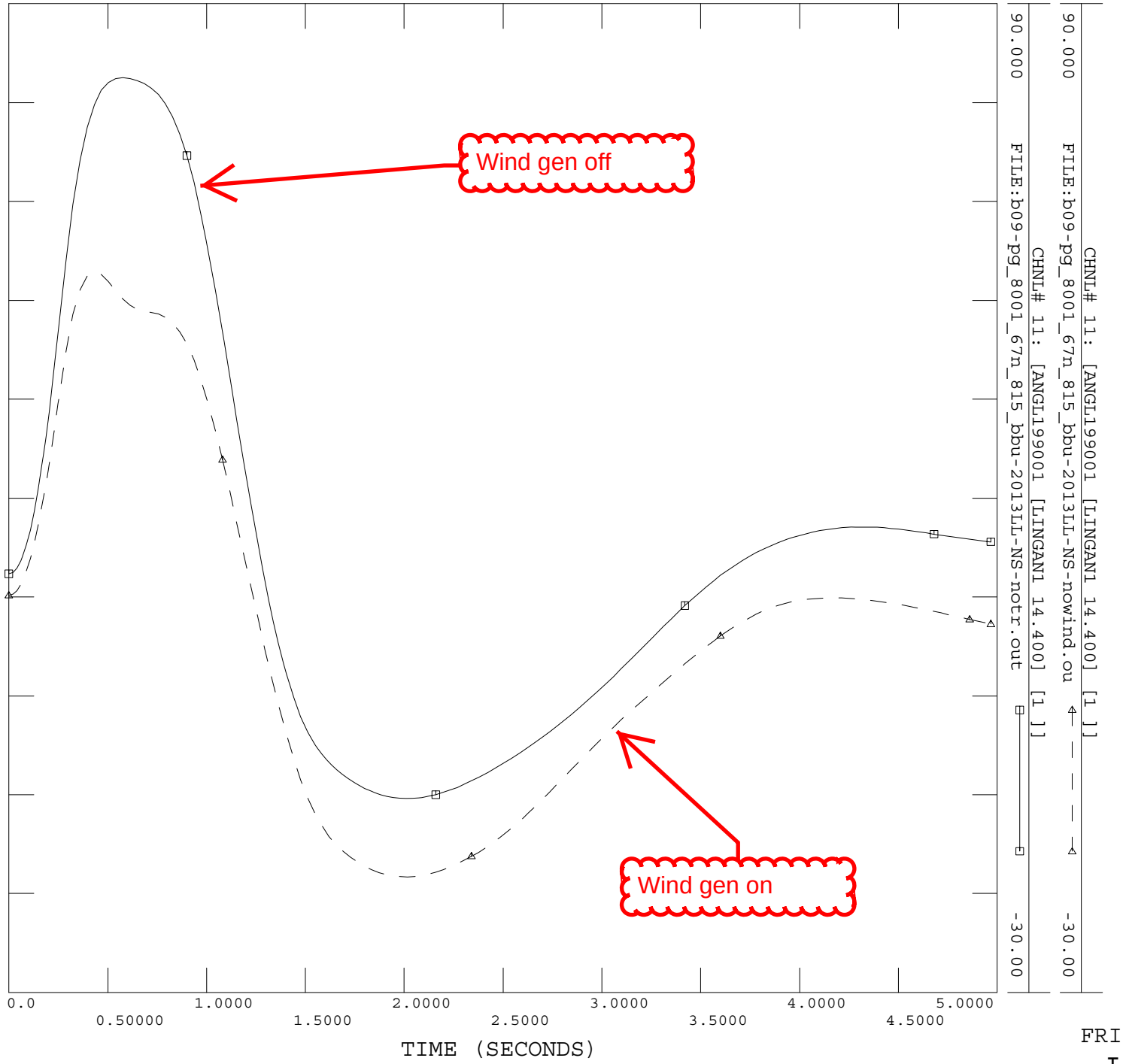

FRI, FEB 20 2009 11:57

LINGAN 1 ANGLE

Figure 81a

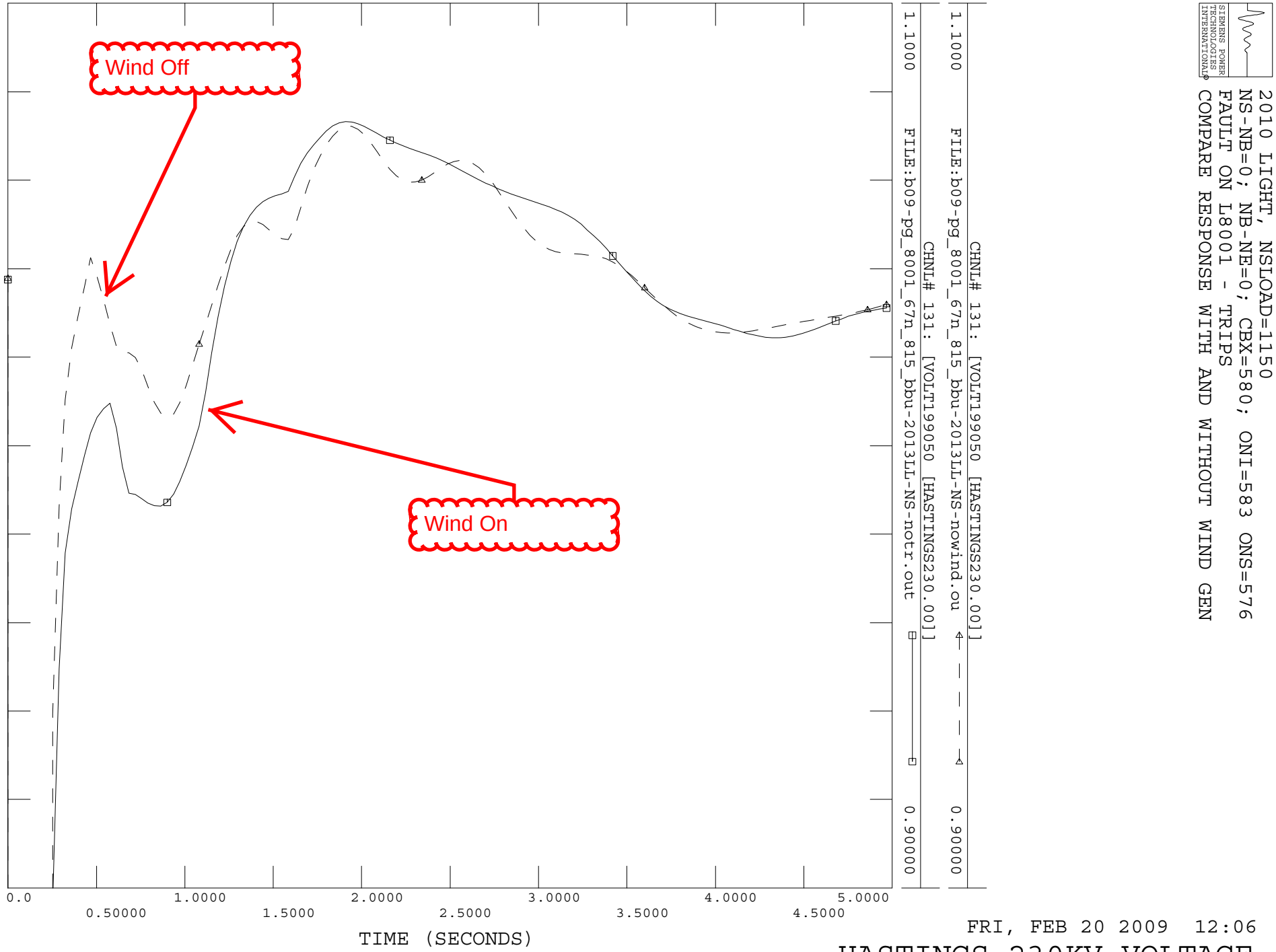

FRI, FEB 20 2009 12:06

HASTINGS 230KV VOLTAGE

Figure 81b

DAMPING

Figure 81c

```
# File:"C:\Documents and Settings\p95rc\My Documents\PSSE\IATR
Working\test10.py", generated on SAT, JUL 26 2008  17:01
#
--------------------------------------------------------------------------------
---------------------
'''
Single Contingencies for 345kV
Messages are re-directed to a Log file
Results Summary is directed to a Results file.

This is the master file. Modify the file for the case under study:
1. Replace all [CASENAME] with the base case loadflow filename prefix (not with
.sav)

2. Replace all [LABEL] with [case title] such as SEASON Peak No Import

3. Replace all [SEASON] with either [Summer] or [Winter]] to reflect the slider
file line ratings

4. Replace all [RATING] with either [1] for RATEA (summer) or [2]for RATEB
(winter).

Save the .py file as run-all.py

Then start PSSE in the local directory and run the py file

Ensure that the pdf print service is pointing to the working directory from the
control panel
and there are no files PLOT*.pdf on the directory
'''
#
--------------------------------------------------------------------------------
---------------------
#
psspy.case(r"""CASENAME.sav""")
psspy.lines_per_page_one_device(1,65)
psspy.progress_output(2,r"""CASENAME_Log.txt""",[0,0])
psspy.report_output(2,r"""CASENAME_Results.txt""",[0,0])
psspy.opendiagfile(r"""SEASON-BPS.sld""")
psspy.fdns([0,0,0,1,1,0,99,0])
psspy.bsys(0,1,[ 69.0, 999.],2,[105,106],0,[],0,[],0,[])
psspy.vchk(0,0, 0.90, 1.1)
psspy.rate(0,0,1,RATING, 110.0)
psspy.printdiagfile(r"""Adobe PDF""",1,2)
#
# contingency 1 -Lose L8004 NO SPS
#
psspy.case_title_data(r"""LABEL""",r"""C01 Lose L8004 No SPS""")
psspy.branch_data(199045,199120,r"""1""",[0,_i,_i,_i,_i,_i],[_f,_f,_f,_f,_f,_f,
_f,_f,_f,_f,_f,_f,_f,_f,_f])
psspy.fdns([0,0,0,1,1,0,99,0])
psspy.bsys(0,1,[ 69.0, 999.],2,[105,106],0,[],0,[],0,[])
psspy.diff(0,0,1,[0,0,0,0],[0.0,0.0,0.0],r"""CASENAME.sav""")
psspy.diff(0,1,2,[0,9,0,0],[0.0, 0.1,0.0],r"""CASENAME.sav""")
psspy.diff(0,1,3,[0,0,0,0],[0.0,0.0,0.0],r"""CASENAME.sav""")
```

```
psspy.vchk(0,0, 0.90, 1.1)
psspy.rate(0,0,1,RATING, 110.0)
os.rename('SEASON-BPS.pdf', 'CASENAME_PLOT001.pdf')
psspy.printdiagfile(r"""Adobe PDF""",1,2)
#
# contingency 1s - lose L8004 with 1-unit SPS
#
psspy.case(r"""CASENAME.sav""")
psspy.case_title_data(r"""LABEL""",r"""C01s LOSE L8004 with 1 unit sps""")
psspy.branch_data(199045,199120,r"""1""",[0,_i,_i,_i,_i,_i],[_f,_f,_f,_f,_f,_f,
_f,_f,_f,_f,_f,_f,_f,_f,_f])
psspy.dscn(199004)
psspy.fdns([0,0,0,1,1,0,99,0])
psspy.bsys(0,1,[ 69.0, 999.],2,[105,106],0,[],0,[],0,[])
psspy.diff(0,0,1,[0,0,0,0],[0.0,0.0,0.0],r"""CASENAME.sav""")
psspy.diff(0,1,2,[0,9,0,0],[0.0, 0.1,0.0],r"""CASENAME.sav""")
psspy.diff(0,1,3,[0,0,0,0],[0.0,0.0,0.0],r"""CASENAME.sav""")
psspy.vchk(0,0, 0.90, 1.1)
psspy.rate(0,0,1,RATING, 110.0)
os.rename('SEASON-BPS.pdf', 'CASENAME_PLOT002.pdf')
psspy.printdiagfile(r"""Adobe PDF""",1,2)
#
# contingency 1ss - lose L8004 with 2-unit SPS
#
psspy.case(r"""CASENAME.sav""")
psspy.case_title_data(r"""LABEL""",r"""C01ss LOSE L8004 with 2 unit sps""")
psspy.branch_data(199045,199120,r"""1""",[0,_i,_i,_i,_i,_i],[_f,_f,_f,_f,_f,_f,
_f,_f,_f,_f,_f,_f,_f,_f,_f])
psspy.dscn(199004)
psspy.dscn(199002)
psspy.fdns([0,0,0,1,1,0,99,0])
psspy.bsys(0,1,[ 69.0, 999.],2,[105,106],0,[],0,[],0,[])
psspy.diff(0,0,1,[0,0,0,0],[0.0,0.0,0.0],r"""CASENAME.sav""")
psspy.diff(0,1,2,[0,9,0,0],[0.0, 0.1,0.0],r"""CASENAME.sav""")
psspy.diff(0,1,3,[0,0,0,0],[0.0,0.0,0.0],r"""CASENAME.sav""")
psspy.vchk(0,0, 0.90, 1.1)
psspy.rate(0,0,1,RATING, 110.0)
os.rename('SEASON-BPS.pdf', 'CASENAME_PLOT003.pdf')
psspy.printdiagfile(r"""Adobe PDF""",1,2)
#
# contingency 2 - lose L8003 with no SPS
#
psspy.case(r"""CASENAME.sav""")
psspy.case_title_data(r"""LABEL""",r"""C02 Lose L8003 No SPS""")
psspy.branch_data(199125,199120,r"""1""",[0,_i,_i,_i,_i,_i],[_f,_f,_f,_f,_f,_f,
_f,_f,_f,_f,_f,_f,_f,_f,_f])
psspy.fdns([0,0,0,1,1,0,99,0])
psspy.bsys(0,1,[ 69.0, 999.],2,[105,106],0,[],0,[],0,[])
psspy.diff(0,0,1,[0,0,0,0],[0.0,0.0,0.0],r"""CASENAME.sav""")
psspy.diff(0,1,2,[0,9,0,0],[0.0, 0.1,0.0],r"""CASENAME.sav""")
psspy.diff(0,1,3,[0,0,0,0],[0.0,0.0,0.0],r"""CASENAME.sav""")
psspy.vchk(0,0, 0.90, 1.1)
psspy.rate(0,0,1,RATING, 110.0)
os.rename('SEASON-BPS.pdf', 'CASENAME_PLOT004.pdf')
psspy.printdiagfile(r"""Adobe PDF""",1,2)
```

```
#
# contingency 2a - lose L8003 with 1-unit SPS
#
psspy.case(r"""CASENAME.sav""")
psspy.case_title_data(r"""LABEL""",r"""C02s Lose L8003 With 1-unit SPS""")
psspy.branch_data(199125,199120,r"""1""",[0,_i,_i,_i,_i,_i],[_f,_f,_f,_f,_f,_f,
_f,_f,_f,_f,_f,_f,_f,_f,_f])
psspy.dscn(199004)
psspy.fdns([0,0,0,1,1,0,99,0])
psspy.bsys(0,1,[ 69.0, 999.],2,[105,106],0,[],0,[],0,[])
psspy.diff(0,0,1,[0,0,0,0],[0.0,0.0,0.0],r"""CASENAME.sav""")
psspy.diff(0,1,2,[0,9,0,0],[0.0, 0.1,0.0],r"""CASENAME.sav""")
psspy.diff(0,1,3,[0,0,0,0],[0.0,0.0,0.0],r"""CASENAME.sav""")
psspy.vchk(0,0, 0.90, 1.1)
psspy.rate(0,0,1,RATING, 110.0)
os.rename('SEASON-BPS.pdf', 'CASENAME_PLOT005.pdf')
psspy.printdiagfile(r"""Adobe PDF""",1,2)
#
# contingency 2b - lose L8003 with 2-unit SPS
#
psspy.case(r"""CASENAME.sav""")
psspy.case_title_data(r"""LABEL""",r"""C02ss Lose L8003 With 2-unit SPS""")
psspy.branch_data(199125,199120,r"""1""",[0,_i,_i,_i,_i,_i],[_f,_f,_f,_f,_f,_f,
_f,_f,_f,_f,_f,_f,_f,_f,_f])
psspy.dscn(199004)
psspy.dscn(199002)
psspy.fdns([0,0,0,1,1,0,99,0])
psspy.bsys(0,1,[ 69.0, 999.],2,[105,106],0,[],0,[],0,[])
psspy.diff(0,0,1,[0,0,0,0],[0.0,0.0,0.0],r"""CASENAME.sav""")
psspy.diff(0,1,2,[0,9,0,0],[0.0, 0.1,0.0],r"""CASENAME.sav""")
psspy.diff(0,1,3,[0,0,0,0],[0.0,0.0,0.0],r"""CASENAME.sav""")
psspy.vchk(0,0, 0.90, 1.1)
psspy.rate(0,0,1,RATING, 110.0)
os.rename('SEASON-BPS.pdf', 'CASENAME_PLOT006.pdf')
psspy.printdiagfile(r"""Adobe PDF""",1,2)
#
# contingency 3 - lose L8002
#
psspy.case(r"""CASENAME.sav""")
psspy.case_title_data(r"""LABEL""",r"""C03 Lose L8002""")
psspy.branch_data(199125,199195,r"""1""",[0,_i,_i,_i,_i,_i],[_f,_f,_f,_f,_f,_f,
_f,_f,_f,_f,_f,_f,_f,_f,_f])
psspy.fdns([0,0,0,1,1,0,99,0])
psspy.bsys(0,1,[ 69.0, 999.],2,[105,106],0,[],0,[],0,[])
psspy.diff(0,0,1,[0,0,0,0],[0.0,0.0,0.0],r"""CASENAME.sav""")
psspy.diff(0,1,2,[0,9,0,0],[0.0, 0.1,0.0],r"""CASENAME.sav""")
psspy.diff(0,1,3,[0,0,0,0],[0.0,0.0,0.0],r"""CASENAME.sav""")
psspy.vchk(0,0, 0.90, 1.1)
psspy.rate(0,0,1,RATING, 110.0)
os.rename('SEASON-BPS.pdf', 'CASENAME_PLOT007.pdf')
psspy.printdiagfile(r"""Adobe PDF""",1,2)
#
# contingency 4 - lose L8001 No sps
#
psspy.case(r"""CASENAME.sav""")
```

```
psspy.case_title_data(r"""LABEL""",r"""C04 Lose L8001 No SPS""")
psspy.dscn(190381)
psspy.fdns([0,0,0,1,1,0,99,0])
psspy.bsys(0,1,[ 69.0, 999.],2,[105,106],0,[],0,[],0,[])
psspy.diff(0,0,1,[0,0,0,0],[0.0,0.0,0.0],r"""CASENAME.sav""")
psspy.diff(0,1,2,[0,9,0,0],[0.0, 0.1,0.0],r"""CASENAME.sav""")
psspy.diff(0,1,3,[0,0,0,0],[0.0,0.0,0.0],r"""CASENAME.sav""")
psspy.vchk(0,0, 0.90, 1.1)
psspy.rate(0,0,1,RATING, 110.0)
os.rename('SEASON-BPS.pdf', 'CASENAME_PLOT008.pdf')
psspy.printdiagfile(r"""Adobe PDF""",1,2)
#
# contingency 4a - lose L8001 1 unit sps
#
psspy.case(r"""CASENAME.sav""")
psspy.case_title_data(r"""LABEL""",r"""C04s Lose L8001 SPS trips 1 Lingan
unit""")
psspy.dscn(190381)
psspy.dscn(199004)
psspy.fdns([0,0,0,1,1,0,99,0])
psspy.bsys(0,1,[ 69.0, 999.],2,[105,106],0,[],0,[],0,[])
psspy.diff(0,0,1,[0,0,0,0],[0.0,0.0,0.0],r"""CASENAME.sav""")
psspy.diff(0,1,2,[0,9,0,0],[0.0, 0.1,0.0],r"""CASENAME.sav""")
psspy.diff(0,1,3,[0,0,0,0],[0.0,0.0,0.0],r"""CASENAME.sav""")
psspy.vchk(0,0, 0.90, 1.1)
psspy.rate(0,0,1,RATING, 110.0)
os.rename('SEASON-BPS.pdf', 'CASENAME_PLOT009.pdf')
psspy.printdiagfile(r"""Adobe PDF""",1,2)
#
# contingency 4b - lose L8001 2 unit sps
#
psspy.case(r"""CASENAME.sav""")
psspy.case_title_data(r"""LABEL""",r"""C04ss Lose L8001 SPS trips 2 Lingan
unit""")
psspy.dscn(190381)
psspy.dscn(199004)
psspy.dscn(199002)
psspy.fdns([0,0,0,1,1,0,99,0])
psspy.bsys(0,1,[ 69.0, 999.],2,[105,106],0,[],0,[],0,[])
psspy.diff(0,0,1,[0,0,0,0],[0.0,0.0,0.0],r"""CASENAME.sav""")
psspy.diff(0,1,2,[0,9,0,0],[0.0, 0.1,0.0],r"""CASENAME.sav""")
psspy.diff(0,1,3,[0,0,0,0],[0.0,0.0,0.0],r"""CASENAME.sav""")
psspy.vchk(0,0, 0.90, 1.1)
psspy.rate(0,0,1,RATING, 110.0)
os.rename('SEASON-BPS.pdf', 'CASENAME_PLOT010.pdf')
psspy.printdiagfile(r"""Adobe PDF""",1,2)
psspy.closediagfile()
psspy.close_powerflow()
# File:"C:\Documents and Settings\p95rc\My Documents\PSSE\IATR
Working\test10.py", generated on SAT, JUL 26 2008  17:01
#
--------------------------------------------------------------------------------
---------------------
'''
Single Contingencies for 230kV
```

```
File: C:\Documents and Settings\p95rc\My Documents\_PSSE\IATR Working\Master-run
-all-delta.py  2/15/2009, 3:01:33 PM
```

```
Messages are re-directed to a Log file
Results Summary is directed to a Results file.

This is the master file. Replace all "CASENAME" with the base case loadflow
filename prefix
as a separate file.  Then start PSSE in the local directory and run the py file

Ensure that the pdf print service is pointing to the working directory from the
control panel
and there are no files PLOT*.pdf on the directory
'''
#
--------------------------------------------------------------------------------
---------------------
#

psspy.case(r"""CASENAME.sav""")
os.rename('SEASON-BPS.pdf', 'CASENAME_PLOT011.pdf')
psspy.opendiagfile(r"""SEASON-BPS.sld""")
psspy.fdns([0,0,0,1,1,0,99,0])
psspy.bsys(0,1,[ 69.0, 999.],2,[105,106],0,[],0,[],0,[])
psspy.diff(0,0,1,[0,0,0,0],[0.0,0.0,0.0],r"""CASENAME.sav""")
psspy.diff(0,1,2,[0,9,0,0],[0.0, 0.1,0.0],r"""CASENAME.sav""")
psspy.diff(0,1,3,[0,0,0,0],[0.0,0.0,0.0],r"""CASENAME.sav""")
psspy.vchk(0,0, 0.90, 1.1)
psspy.rate(0,0,1,RATING, 110.0)
psspy.printdiagfile(r"""Adobe PDF""",1,2)
#
# contingency 1 -Lose L7012 without SPS
#
psspy.case_title_data(r"""LABEL""",r"""C05 Lose L7012 No SPS""")
psspy.branch_data(199000,199050,r"""2""",[0,_i,_i,_i,_i,_i],[_f,_f,_f,_f,_f,_f,
_f,_f,_f,_f,_f,_f,_f,_f,_f])
psspy.fdns([0,0,0,1,1,0,99,0])
psspy.bsys(0,1,[ 69.0, 999.],2,[105,106],0,[],0,[],0,[])
psspy.diff(0,0,1,[0,0,0,0],[0.0,0.0,0.0],r"""CASENAME.sav""")
psspy.diff(0,1,2,[0,9,0,0],[0.0, 0.1,0.0],r"""CASENAME.sav""")
psspy.diff(0,1,3,[0,0,0,0],[0.0,0.0,0.0],r"""CASENAME.sav""")
psspy.vchk(0,0, 0.90, 1.1)
psspy.rate(0,0,1,RATING, 110.0)
os.rename('SEASON-BPS.pdf', 'CASENAME_PLOT012.pdf')
psspy.printdiagfile(r"""Adobe PDF""",1,2)
#
# contingency 1s - lose L7012 with 1-unit SPS
#
psspy.case(r"""CASENAME.sav""")
psspy.case_title_data(r"""LABEL""",r"""C05s LOSE L7012 with sps""")
psspy.branch_data(199000,199050,r"""2""",[0,_i,_i,_i,_i,_i],[_f,_f,_f,_f,_f,_f,
_f,_f,_f,_f,_f,_f,_f,_f,_f])
psspy.dscn(199004)
psspy.fdns([0,0,0,1,1,0,99,0])
psspy.bsys(0,1,[ 69.0, 999.],2,[105,106],0,[],0,[],0,[])
psspy.diff(0,0,1,[0,0,0,0],[0.0,0.0,0.0],r"""CASENAME.sav""")
psspy.diff(0,1,2,[0,9,0,0],[0.0, 0.1,0.0],r"""CASENAME.sav""")
psspy.diff(0,1,3,[0,0,0,0],[0.0,0.0,0.0],r"""CASENAME.sav""")
```

```
psspy.vchk(0,0, 0.90, 1.1)
psspy.rate(0,0,1,RATING, 110.0)
os.rename('SEASON-BPS.pdf', 'CASENAME_PLOT013.pdf')
psspy.printdiagfile(r"""Adobe PDF""",1,2)
#
# contingency 2 - lose L7011
#
psspy.case(r"""CASENAME.sav""")
psspy.case_title_data(r"""LABEL""",r"""C06 Lose L7011""")
psspy.branch_data(199000,199050,r"""1""",[0,_i,_i,_i,_i,_i],[_f,_f,_f,_f,_f,_f,
_f,_f,_f,_f,_f,_f,_f,_f,_f])
psspy.fdns([0,0,0,1,1,0,99,0])
psspy.bsys(0,1,[ 69.0, 999.],2,[105,106],0,[],0,[],0,[])
psspy.diff(0,0,1,[0,0,0,0],[0.0,0.0,0.0],r"""CASENAME.sav""")
psspy.diff(0,1,2,[0,9,0,0],[0.0, 0.1,0.0],r"""CASENAME.sav""")
psspy.diff(0,1,3,[0,0,0,0],[0.0,0.0,0.0],r"""CASENAME.sav""")
psspy.vchk(0,0, 0.90, 1.1)
psspy.rate(0,0,1,RATING, 110.0)
os.rename('SEASON-BPS.pdf', 'CASENAME_PLOT014.pdf')
psspy.printdiagfile(r"""Adobe PDF""",1,2)
#
# contingency 3 - lose L7005
#
psspy.case(r"""CASENAME.sav""")
psspy.case_title_data(r"""LABEL""",r"""C07 Lose L7005""")
psspy.branch_data(199050,199130,r"""3""",[0,_i,_i,_i,_i,_i],[_f,_f,_f,_f,_f,_f,
_f,_f,_f,_f,_f,_f,_f,_f,_f])
psspy.fdns([0,0,0,1,1,0,99,0])
psspy.bsys(0,1,[ 69.0, 999.],2,[105,106],0,[],0,[],0,[])
psspy.diff(0,0,1,[0,0,0,0],[0.0,0.0,0.0],r"""CASENAME.sav""")
psspy.diff(0,1,2,[0,9,0,0],[0.0, 0.1,0.0],r"""CASENAME.sav""")
psspy.diff(0,1,3,[0,0,0,0],[0.0,0.0,0.0],r"""CASENAME.sav""")
psspy.vchk(0,0, 0.90, 1.1)
psspy.rate(0,0,1,RATING, 110.0)
os.rename('SEASON-BPS.pdf', 'CASENAME_PLOT015.pdf')
psspy.printdiagfile(r"""Adobe PDF""",1,2)
#
# contingency 4 - lose L7018
#
psspy.case(r"""CASENAME.sav""")
psspy.case_title_data(r"""LABEL""",r"""C08 Lose L7018""")
psspy.branch_data(199130,199200,r"""3""",[0,_i,_i,_i,_i,_i],[_f,_f,_f,_f,_f,_f,
_f,_f,_f,_f,_f,_f,_f,_f,_f])
psspy.fdns([0,0,0,1,1,0,99,0])
psspy.bsys(0,1,[ 69.0, 999.],2,[105,106],0,[],0,[],0,[])
psspy.vchk(0,0, 0.90, 1.1)
psspy.rate(0,0,1,RATING, 110.0)
os.rename('SEASON-BPS.pdf', 'CASENAME_PLOT016.pdf')
psspy.printdiagfile(r"""Adobe PDF""",1,2)
#
# contingency 5 - lose L7009
#
psspy.closediagfile()
psspy.opendiagfile(r"""SEASON-HRM.sld""")
psspy.case(r"""CASENAME.sav""")
```

```
psspy.case_title_data(r"""LABEL""",r"""C09 Lose L7009""")
psspy.dscn(199241)
psspy.fdns([0,0,0,1,1,0,99,0])
psspy.bsys(0,1,[ 69.0, 999.],2,[105,106],0,[],0,[],0,[])
psspy.diff(0,0,1,[0,0,0,0],[0.0,0.0,0.0],r"""CASENAME.sav""")
psspy.diff(0,1,2,[0,9,0,0],[0.0, 0.1,0.0],r"""CASENAME.sav""")
psspy.diff(0,1,3,[0,0,0,0],[0.0,0.0,0.0],r"""CASENAME.sav""")
psspy.vchk(0,0, 0.90, 1.1)
psspy.rate(0,0,1,RATING, 110.0)
os.rename('SEASON-BPS.pdf', 'CASENAME_PLOT017.pdf')
psspy.printdiagfile(r"""Adobe PDF""",1,2)
#
# contingency 6 - lose L7004w
#
psspy.closediagfile()
psspy.opendiagfile(r"""SEASON-BPS.sld""")
psspy.case(r"""CASENAME.sav""")
psspy.case_title_data(r"""LABEL""",r"""C10 Lose L7004 West""")
psspy.branch_data(199590,199130,r"""2""",[0,_i,_i,_i,_i,_i],[_f,_f,_f,_f,_f,_f,
_f,_f,_f,_f,_f,_f,_f,_f,_f])
psspy.fdns([0,0,0,1,1,0,99,0])
psspy.bsys(0,1,[ 69.0, 999.],2,[105,106],0,[],0,[],0,[])
psspy.diff(0,0,1,[0,0,0,0],[0.0,0.0,0.0],r"""CASENAME.sav""")
psspy.diff(0,1,2,[0,9,0,0],[0.0, 0.1,0.0],r"""CASENAME.sav""")
psspy.diff(0,1,3,[0,0,0,0],[0.0,0.0,0.0],r"""CASENAME.sav""")
psspy.vchk(0,0, 0.90, 1.1)
psspy.rate(0,0,1,RATING, 110.0)
os.rename('SEASON-HRM.pdf', 'CASENAME_PLOT018.pdf')
psspy.printdiagfile(r"""Adobe PDF""",1,2)
#
# contingency 7 - lose L7014
#
psspy.closediagfile()
psspy.opendiagfile(r"""SEASON-BPS.sld""")
psspy.case(r"""CASENAME.sav""")
psspy.case_title_data(r"""LABEL""",r"""C11 Lose L7014""")
psspy.dscn(199040)
psspy.fdns([0,0,0,1,1,0,99,0])
psspy.bsys(0,1,[ 69.0, 999.],2,[105,106],0,[],0,[],0,[])
psspy.diff(0,0,1,[0,0,0,0],[0.0,0.0,0.0],r"""CASENAME.sav""")
psspy.diff(0,1,2,[0,9,0,0],[0.0, 0.1,0.0],r"""CASENAME.sav""")
psspy.diff(0,1,3,[0,0,0,0],[0.0,0.0,0.0],r"""CASENAME.sav""")
psspy.vchk(0,0, 0.90, 1.1)
psspy.rate(0,0,1,RATING, 110.0)
os.rename('SEASON-BPS.pdf', 'CASENAME_PLOT019.pdf')
psspy.printdiagfile(r"""Adobe PDF""",1,2)
psspy.closediagfile()
psspy.close_powerflow()
os.rename('SEASON-BPS.pdf', 'CASENAME_PLOT020.pdf')
#
--------------------------------------------------------------------------------
---------------------
'''
Single Contingencies for 138kV
Messages are re-directed to a Log file
```

```
Results Summary is directed to a Results file.

This is the master file. Replace all "CASENAME" with the base case loadflow
filename prefix
as a separate file.  Then start PSSE in the local directory and run the py file

Ensure that the pdf print service is pointing to the working directory from the
control panel
and there are no files PLOT*.pdf on the directory
'''
#
--------------------------------------------------------------------------------
---------------------
#
psspy.case(r"""CASENAME.sav""")
psspy.opendiagfile(r"""SEASON-BPS.sld""")
psspy.fdns([0,0,0,1,1,0,99,0])
psspy.bsys(0,1,[ 69.0, 999.],2,[105,106],0,[],0,[],0,[])
psspy.vchk(0,0, 0.90, 1.1)
psspy.rate(0,0,1,RATING, 110.0)
psspy.printdiagfile(r"""Adobe PDF""",1,2)
#
# contingency 1 -Lose L6503
#
psspy.case_title_data(r"""LABEL""",r"""C12 Lose 6503""")
psspy.dscn(199100)
psspy.bsys(0,1,[ 69.0, 999.],2,[105,106],0,[],0,[],0,[])
psspy.diff(0,0,1,[0,0,0,0],[0.0,0.0,0.0],r"""CASENAME.sav""")
psspy.diff(0,1,2,[0,9,0,0],[0.0, 0.1,0.0],r"""CASENAME.sav""")
psspy.diff(0,1,3,[0,0,0,0],[0.0,0.0,0.0],r"""CASENAME.sav""")
psspy.diff(0,0,1,[0,0,0,0],[0.0,0.0,0.0],r"""CASENAME.sav""")
psspy.diff(0,1,2,[0,9,0,0],[0.0, 0.1,0.0],r"""CASENAME.sav""")
psspy.diff(0,1,3,[0,0,0,0],[0.0,0.0,0.0],r"""CASENAME.sav""")
psspy.vchk(0,0, 0.90, 1.1)
psspy.rate(0,0,1,RATING, 110.0)
psspy.fdns([0,0,0,1,1,0,99,0])
os.rename('SEASON-BPS.pdf', 'CASENAME_PLOT021.pdf')
psspy.printdiagfile(r"""Adobe PDF""",1,2)
#
# contingency 2 - lose L6516
#
psspy.case(r"""CASENAME.sav""")
psspy.case_title_data(r"""LABEL""",r"""C13 LOSE L6511""")
psspy.dscn(199075)
psspy.fdns([0,0,0,1,1,0,99,0])
psspy.bsys(0,1,[ 69.0, 999.],2,[105,106],0,[],0,[],0,[])
psspy.diff(0,0,1,[0,0,0,0],[0.0,0.0,0.0],r"""CASENAME.sav""")
psspy.diff(0,1,2,[0,9,0,0],[0.0, 0.1,0.0],r"""CASENAME.sav""")
psspy.diff(0,1,3,[0,0,0,0],[0.0,0.0,0.0],r"""CASENAME.sav""")
psspy.vchk(0,0, 0.90, 1.1)
psspy.rate(0,0,1,RATING, 110.0)
os.rename('SEASON-BPS.pdf', 'CASENAME_PLOT022.pdf')
psspy.printdiagfile(r"""Adobe PDF""",1,2)
#
# contingency 3 - lose L6511East
```

```
#
psspy.case(r"""CASENAME.sav""")
psspy.case_title_data(r"""LABEL""",r"""C14 Lose L6511E""")
psspy.branch_data(199076,199610,r"""1""",[0,_i,_i,_i,_i,_i],[_f,_f,_f,_f,_f,_f,
_f,_f,_f,_f,_f,_f,_f,_f,_f])
psspy.fdns([0,0,0,1,1,0,99,0])
psspy.bsys(0,1,[ 69.0, 999.],2,[105,106],0,[],0,[],0,[])
psspy.diff(0,0,1,[0,0,0,0],[0.0,0.0,0.0],r"""CASENAME.sav""")
psspy.diff(0,1,2,[0,9,0,0],[0.0, 0.1,0.0],r"""CASENAME.sav""")
psspy.diff(0,1,3,[0,0,0,0],[0.0,0.0,0.0],r"""CASENAME.sav""")
psspy.vchk(0,0, 0.90, 1.1)
psspy.rate(0,0,1,RATING, 110.0)
os.rename('SEASON-BPS.pdf', 'CASENAME_PLOT023.pdf')
psspy.printdiagfile(r"""Adobe PDF""",1,2)
#
# contingency 4 - lose L6511West
#
psspy.case(r"""CASENAME.sav""")
psspy.case_title_data(r"""LABEL""",r"""C15 Lose L6511W""")
psspy.branch_data(199610,199090,r"""1""",[0,_i,_i,_i,_i,_i],[_f,_f,_f,_f,_f,_f,
_f,_f,_f,_f,_f,_f,_f,_f,_f])
psspy.fdns([0,0,0,1,1,0,99,0])
psspy.bsys(0,1,[ 69.0, 999.],2,[105,106],0,[],0,[],0,[])
psspy.diff(0,0,1,[0,0,0,0],[0.0,0.0,0.0],r"""CASENAME.sav""")
psspy.diff(0,1,2,[0,9,0,0],[0.0, 0.1,0.0],r"""CASENAME.sav""")
psspy.diff(0,1,3,[0,0,0,0],[0.0,0.0,0.0],r"""CASENAME.sav""")
psspy.vchk(0,0, 0.90, 1.1)
psspy.rate(0,0,1,RATING, 110.0)
os.rename('SEASON-BPS.pdf', 'CASENAME_PLOT024.pdf')
psspy.printdiagfile(r"""Adobe PDF""",1,2)
#
# contingency 5 - lose L6513
#
psspy.case(r"""CASENAME.sav""")
psspy.case_title_data(r"""LABEL""",r"""C16 Lose L6513""")
psspy.dscn(199134)
psspy.dscn(199540)
psspy.dscn(199541)
psspy.dscn(199542)
psspy.dscn(199543)
psspy.fdns([0,0,0,1,1,0,99,0])
psspy.bsys(0,1,[ 69.0, 999.],2,[105,106],0,[],0,[],0,[])
psspy.diff(0,0,1,[0,0,0,0],[0.0,0.0,0.0],r"""CASENAME.sav""")
psspy.diff(0,1,2,[0,9,0,0],[0.0, 0.1,0.0],r"""CASENAME.sav""")
psspy.diff(0,1,3,[0,0,0,0],[0.0,0.0,0.0],r"""CASENAME.sav""")
psspy.vchk(0,0, 0.90, 1.1)
psspy.rate(0,0,1,RATING, 110.0)
os.rename('SEASON-BPS.pdf', 'CASENAME_PLOT025.pdf')
psspy.printdiagfile(r"""Adobe PDF""",1,2)
#
# contingency 6 - lose L6536
#
psspy.case(r"""CASENAME.sav""")
psspy.case_title_data(r"""LABEL""",r"""C17 Lose L6536""")
psspy.dscn(199152)
```

```
psspy.dscn(190408)
psspy.fdns([0,0,0,1,1,0,99,0])
psspy.bsys(0,1,[ 69.0, 999.],2,[105,106],0,[],0,[],0,[])
psspy.diff(0,0,1,[0,0,0,0],[0.0,0.0,0.0],r"""CASENAME.sav""")
psspy.diff(0,1,2,[0,9,0,0],[0.0, 0.1,0.0],r"""CASENAME.sav""")
psspy.diff(0,1,3,[0,0,0,0],[0.0,0.0,0.0],r"""CASENAME.sav""")
psspy.vchk(0,0, 0.90, 1.1)
psspy.rate(0,0,1,RATING, 110.0)
os.rename('SEASON-BPS.pdf', 'CASENAME_PLOT026.pdf')
psspy.printdiagfile(r"""Adobe PDF""",1,2)
#
# contingency 7 - lose L6535South
#
psspy.case(r"""CASENAME.sav""")
psspy.case_title_data(r"""LABEL""",r"""C18 Lose L6535S""")
psspy.branch_data(199145,199530,r"""1""",[0,_i,_i,_i,_i,_i],[_f,_f,_f,_f,_f,_f,
_f,_f,_f,_f,_f,_f,_f,_f,_f])
psspy.fdns([0,0,0,1,1,0,99,0])
psspy.bsys(0,1,[ 69.0, 999.],2,[105,106],0,[],0,[],0,[])
psspy.diff(0,0,1,[0,0,0,0],[0.0,0.0,0.0],r"""CASENAME.sav""")
psspy.diff(0,1,2,[0,9,0,0],[0.0, 0.1,0.0],r"""CASENAME.sav""")
psspy.diff(0,1,3,[0,0,0,0],[0.0,0.0,0.0],r"""CASENAME.sav""")
psspy.vchk(0,0, 0.90, 1.1)
psspy.rate(0,0,1,RATING, 110.0)
os.rename('SEASON-BPS.pdf', 'CASENAME_PLOT027.pdf')
psspy.printdiagfile(r"""Adobe PDF""",1,2)
#
# contingency 8 - lose L6535North
#
psspy.case(r"""CASENAME.sav""")
psspy.case_title_data(r"""LABEL""",r"""C19 Lose L6535N""")
psspy.dscn(190379)
psspy.fdns([0,0,0,1,1,0,99,0])
psspy.bsys(0,1,[ 69.0, 999.],2,[105,106],0,[],0,[],0,[])
psspy.diff(0,0,1,[0,0,0,0],[0.0,0.0,0.0],r"""CASENAME.sav""")
psspy.diff(0,1,2,[0,9,0,0],[0.0, 0.1,0.0],r"""CASENAME.sav""")
psspy.diff(0,1,3,[0,0,0,0],[0.0,0.0,0.0],r"""CASENAME.sav""")
psspy.vchk(0,0, 0.90, 1.1)
psspy.rate(0,0,1,RATING, 110.0)
os.rename('SEASON-BPS.pdf', 'CASENAME_PLOT028.pdf')
psspy.printdiagfile(r"""Adobe PDF""",1,2)
#
# contingency 9 - lose L6537
#
psspy.case(r"""CASENAME.sav""")
psspy.case_title_data(r"""LABEL""",r"""C20 Lose L6537""")
psspy.dscn(199057)
psspy.dscn(199033)
psspy.tree(1,0)
psspy.tree(2,1)
psspy.dscn(199036)
psspy.fdns([0,0,0,1,1,0,99,0])
psspy.bsys(0,1,[ 69.0, 999.],2,[105,106],0,[],0,[],0,[])
psspy.diff(0,0,1,[0,0,0,0],[0.0,0.0,0.0],r"""CASENAME.sav""")
psspy.diff(0,1,2,[0,9,0,0],[0.0, 0.1,0.0],r"""CASENAME.sav""")
```

```
psspy.diff(0,1,3,[0,0,0,0],[0.0,0.0,0.0],r"""CASENAME.sav""")
psspy.vchk(0,0, 0.90, 1.1)
psspy.rate(0,0,1,RATING, 110.0)
os.rename('SEASON-BPS.pdf', 'CASENAME_PLOT029.pdf')
psspy.printdiagfile(r"""Adobe PDF""",1,2)
#
# contingency 10 - lose L6516
#
psspy.case(r"""CASENAME.sav""")
psspy.case_title_data(r"""LABEL""",r"""C21 Lose L6516""")
psspy.dscn(199056)
psspy.dscn(199070)
psspy.fdns([0,0,0,1,1,0,99,0])
psspy.bsys(0,1,[ 69.0, 999.],2,[105,106],0,[],0,[],0,[])
psspy.diff(0,0,1,[0,0,0,0],[0.0,0.0,0.0],r"""CASENAME.sav""")
psspy.diff(0,1,2,[0,9,0,0],[0.0, 0.1,0.0],r"""CASENAME.sav""")
psspy.diff(0,1,3,[0,0,0,0],[0.0,0.0,0.0],r"""CASENAME.sav""")
psspy.vchk(0,0, 0.90, 1.1)
psspy.rate(0,0,1,RATING, 110.0)
os.rename('SEASON-BPS.pdf', 'CASENAME_PLOT030.pdf')
psspy.printdiagfile(r"""Adobe PDF""",1,2)
#
# contingency 11 - lose L6538
#
psspy.case(r"""CASENAME.sav""")
psspy.case_title_data(r"""LABEL""",r"""C22 Lose L6538""")
psspy.branch_data(199031,199025,r"""1""",[0,_i,_i,_i,_i,_i],[_f,_f,_f,_f,_f,_f,
_f,_f,_f,_f,_f,_f,_f,_f,_f])
psspy.fdns([0,0,0,1,1,0,99,0])
psspy.bsys(0,1,[ 69.0, 999.],2,[105,106],0,[],0,[],0,[])
psspy.diff(0,0,1,[0,0,0,0],[0.0,0.0,0.0],r"""CASENAME.sav""")
psspy.diff(0,1,2,[0,9,0,0],[0.0, 0.1,0.0],r"""CASENAME.sav""")
psspy.diff(0,1,3,[0,0,0,0],[0.0,0.0,0.0],r"""CASENAME.sav""")
psspy.vchk(0,0, 0.90, 1.1)
psspy.rate(0,0,1,RATING, 110.0)
os.rename('SEASON-BPS.pdf', 'CASENAME_PLOT031.pdf')
psspy.printdiagfile(r"""Adobe PDF""",1,2)
#
# Set up for Halifax area contingencies
psspy.closediagfile()
psspy.case(r"""CASENAME.sav""")
psspy.opendiagfile(r"""SEASON-HRM.sld""")
psspy.fdns([0,0,0,1,1,0,99,0])
psspy.bsys(0,1,[ 69.0, 999.],2,[105,106],0,[],0,[],0,[])
psspy.vchk(0,0, 0.90, 1.1)
psspy.rate(0,0,1,RATING, 110.0)
os.rename('SEASON-BPS.pdf', 'CASENAME_PLOT032.pdf')
psspy.printdiagfile(r"""Adobe PDF""",1,2)
#
# Contingency 12 Lose L6003
#
psspy.case(r"""CASENAME.sav""")
psspy.case_title_data(r"""LABEL""",r"""C23 Lose L6003""")
psspy.branch_data(199165,199184,r"""1""",[0,_i,_i,_i,_i,_i],[_f,_f,_f,_f,_f,_f,
_f,_f,_f,_f,_f,_f,_f,_f,_f])
```

```
psspy.fdns([0,0,0,1,1,0,99,0])
psspy.bsys(0,1,[ 69.0, 999.],2,[105,106],0,[],0,[],0,[])
psspy.diff(0,0,1,[0,0,0,0],[0.0,0.0,0.0],r"""CASENAME.sav""")
psspy.diff(0,1,2,[0,9,0,0],[0.0, 0.1,0.0],r"""CASENAME.sav""")
psspy.diff(0,1,3,[0,0,0,0],[0.0,0.0,0.0],r"""CASENAME.sav""")
psspy.vchk(0,0, 0.90, 1.1)
psspy.rate(0,0,1,RATING, 110.0)
os.rename('SEASON-HRM.pdf', 'CASENAME_PLOT033.pdf')
psspy.printdiagfile(r"""Adobe PDF""",1,2)
#
# Contingency 13 Lose L6005
#
psspy.case(r"""CASENAME.sav""")
psspy.case_title_data(r"""LABEL""",r"""C24 Lose L6005""")
psspy.dscn(199203)
psspy.fdns([0,0,0,1,1,0,99,0])
psspy.bsys(0,1,[ 69.0, 999.],2,[105,106],0,[],0,[],0,[])
psspy.diff(0,0,1,[0,0,0,0],[0.0,0.0,0.0],r"""CASENAME.sav""")
psspy.diff(0,1,2,[0,9,0,0],[0.0, 0.1,0.0],r"""CASENAME.sav""")
psspy.diff(0,1,3,[0,0,0,0],[0.0,0.0,0.0],r"""CASENAME.sav""")
psspy.vchk(0,0, 0.90, 1.1)
psspy.rate(0,0,1,RATING, 110.0)
os.rename('SEASON-HRM.pdf', 'CASENAME_PLOT034.pdf')
psspy.printdiagfile(r"""Adobe PDF""",1,2)
#
# Contingency 14 Lose L6007
#
psspy.case(r"""CASENAME.sav""")
psspy.case_title_data(r"""LABEL""",r"""C25 Lose L6007""")
psspy.branch_data(199165,199187,r"""1""",[0,_i,_i,_i,_i,_i],[_f,_f,_f,_f,_f,_f,
_f,_f,_f,_f,_f,_f,_f,_f,_f])
psspy.fdns([0,0,0,1,1,0,99,0])
psspy.bsys(0,1,[ 69.0, 999.],2,[105,106],0,[],0,[],0,[])
psspy.diff(0,0,1,[0,0,0,0],[0.0,0.0,0.0],r"""CASENAME.sav""")
psspy.diff(0,1,2,[0,9,0,0],[0.0, 0.1,0.0],r"""CASENAME.sav""")
psspy.diff(0,1,3,[0,0,0,0],[0.0,0.0,0.0],r"""CASENAME.sav""")
psspy.vchk(0,0, 0.90, 1.1)
psspy.rate(0,0,1,RATING, 110.0)
os.rename('SEASON-HRM.pdf', 'CASENAME_PLOT035.pdf')
psspy.printdiagfile(r"""Adobe PDF""",1,2)
#
# Contingency 15 Lose L6008
#
psspy.case(r"""CASENAME.sav""")
psspy.case_title_data(r"""LABEL""",r"""C26 Lose L6008""")
psspy.branch_data(199184,199190,r"""1""",[0,_i,_i,_i,_i,_i],[_f,_f,_f,_f,_f,_f,
_f,_f,_f,_f,_f,_f,_f,_f,_f])
psspy.fdns([0,0,0,1,1,0,99,0])
psspy.bsys(0,1,[ 69.0, 999.],2,[105,106],0,[],0,[],0,[])
psspy.diff(0,0,1,[0,0,0,0],[0.0,0.0,0.0],r"""CASENAME.sav""")
psspy.diff(0,1,2,[0,9,0,0],[0.0, 0.1,0.0],r"""CASENAME.sav""")
psspy.diff(0,1,3,[0,0,0,0],[0.0,0.0,0.0],r"""CASENAME.sav""")
psspy.vchk(0,0, 0.90, 1.1)
psspy.rate(0,0,1,RATING, 110.0)
os.rename('SEASON-HRM.pdf', 'CASENAME_PLOT036.pdf')
```

```
psspy.printdiagfile(r"""Adobe PDF""",1,2)
#
# Contingency 16 Lose L6009
#
psspy.case(r"""CASENAME.sav""")
psspy.case_title_data(r"""LABEL""",r"""C27 Lose L6009""")
psspy.dscn(199208)
psspy.dscn(199209)
psspy.fdns([0,0,0,1,1,0,99,0])
psspy.bsys(0,1,[ 69.0, 999.],2,[105,106],0,[],0,[],0,[])
psspy.diff(0,0,1,[0,0,0,0],[0.0,0.0,0.0],r"""CASENAME.sav""")
psspy.diff(0,1,2,[0,9,0,0],[0.0, 0.1,0.0],r"""CASENAME.sav""")
psspy.diff(0,1,3,[0,0,0,0],[0.0,0.0,0.0],r"""CASENAME.sav""")
psspy.vchk(0,0, 0.90, 1.1)
psspy.rate(0,0,1,RATING, 110.0)
os.rename('SEASON-HRM.pdf', 'CASENAME_PLOT037.pdf')
psspy.printdiagfile(r"""Adobe PDF""",1,2)
#
# Contingency 17 Lose L6010
#
psspy.case(r"""CASENAME.sav""")
psspy.case_title_data(r"""LABEL""",r"""C28 Lose L6010""")
psspy.branch_data(199184,199201,r"""1""",[0,_i,_i,_i,_i,_i],[_f,_f,_f,_f,_f,_f,
_f,_f,_f,_f,_f,_f,_f,_f,_f])
psspy.fdns([0,0,0,1,1,0,99,0])
psspy.bsys(0,1,[ 69.0, 999.],2,[105,106],0,[],0,[],0,[])
psspy.diff(0,0,1,[0,0,0,0],[0.0,0.0,0.0],r"""CASENAME.sav""")
psspy.diff(0,1,2,[0,9,0,0],[0.0, 0.1,0.0],r"""CASENAME.sav""")
psspy.diff(0,1,3,[0,0,0,0],[0.0,0.0,0.0],r"""CASENAME.sav""")
psspy.vchk(0,0, 0.90, 1.1)
psspy.rate(0,0,1,RATING, 110.0)
os.rename('SEASON-HRM.pdf', 'CASENAME_PLOT038.pdf')
psspy.printdiagfile(r"""Adobe PDF""",1,2)
#
# Contingency 18 Lose L6014
#
psspy.case(r"""CASENAME.sav""")
psspy.case_title_data(r"""LABEL""",r"""C29 Lose L6014""")
psspy.branch_data(199198,199165,r"""1""",[0,_i,_i,_i,_i,_i],[_f,_f,_f,_f,_f,_f,
_f,_f,_f,_f,_f,_f,_f,_f,_f])
psspy.fdns([0,0,0,1,1,0,99,0])
psspy.bsys(0,1,[ 69.0, 999.],2,[105,106],0,[],0,[],0,[])
psspy.diff(0,0,1,[0,0,0,0],[0.0,0.0,0.0],r"""CASENAME.sav""")
psspy.diff(0,1,2,[0,9,0,0],[0.0, 0.1,0.0],r"""CASENAME.sav""")
psspy.diff(0,1,3,[0,0,0,0],[0.0,0.0,0.0],r"""CASENAME.sav""")
psspy.vchk(0,0, 0.90, 1.1)
psspy.rate(0,0,1,RATING, 110.0)
os.rename('SEASON-HRM.pdf', 'CASENAME_PLOT039.pdf')
psspy.printdiagfile(r"""Adobe PDF""",1,2)
#
# Contingency 19 Lose L6016
#
psspy.case(r"""CASENAME.sav""")
psspy.case_title_data(r"""LABEL""",r"""C30 Lose L6016""")
psspy.dscn(199208)
```

```
psspy.dscn(199209)
psspy.fdns([0,0,0,1,1,0,99,0])
psspy.bsys(0,1,[ 69.0, 999.],2,[105,106],0,[],0,[],0,[])
psspy.diff(0,0,1,[0,0,0,0],[0.0,0.0,0.0],r"""CASENAME.sav""")
psspy.diff(0,1,2,[0,9,0,0],[0.0, 0.1,0.0],r"""CASENAME.sav""")
psspy.diff(0,1,3,[0,0,0,0],[0.0,0.0,0.0],r"""CASENAME.sav""")
psspy.vchk(0,0, 0.90, 1.1)
psspy.rate(0,0,1,RATING, 110.0)
os.rename('SEASON-HRM.pdf', 'CASENAME_PLOT040.pdf')
psspy.printdiagfile(r"""Adobe PDF""",1,2)
#
# Contingency 20 Lose L6033
#
psspy.case_title_data(r"""LABEL""",r"""C31 Lose L6033""")
psspy.dscn(199197)
psspy.fdns([0,0,0,1,1,0,99,0])
psspy.bsys(0,1,[ 69.0, 999.],2,[105,106],0,[],0,[],0,[])
psspy.diff(0,0,1,[0,0,0,0],[0.0,0.0,0.0],r"""CASENAME.sav""")
psspy.diff(0,1,2,[0,9,0,0],[0.0, 0.1,0.0],r"""CASENAME.sav""")
psspy.diff(0,1,3,[0,0,0,0],[0.0,0.0,0.0],r"""CASENAME.sav""")
psspy.vchk(0,0, 0.90, 1.1)
psspy.rate(0,0,1,RATING, 110.0)
os.rename('SEASON-HRM.pdf', 'CASENAME_PLOT041.pdf')
psspy.printdiagfile(r"""Adobe PDF""",1,2)
#
# Contingency 21 Lose L6035
#
psspy.case(r"""CASENAME.sav""")
psspy.case_title_data(r"""LABEL""",r"""C32 Lose L6035""")
psspy.branch_data(199193,199198,r"""1""",[0,_i,_i,_i,_i,_i],[_f,_f,_f,_f,_f,_f,
_f,_f,_f,_f,_f,_f,_f,_f,_f])
psspy.fdns([0,0,0,1,1,0,99,0])
psspy.bsys(0,1,[ 69.0, 999.],2,[105,106],0,[],0,[],0,[])
psspy.diff(0,0,1,[0,0,0,0],[0.0,0.0,0.0],r"""CASENAME.sav""")
psspy.diff(0,1,2,[0,9,0,0],[0.0, 0.1,0.0],r"""CASENAME.sav""")
psspy.diff(0,1,3,[0,0,0,0],[0.0,0.0,0.0],r"""CASENAME.sav""")
psspy.vchk(0,0, 0.90, 1.1)
psspy.rate(0,0,1,RATING, 110.0)
os.rename('SEASON-HRM.pdf', 'CASENAME_PLOT042.pdf')
psspy.printdiagfile(r"""Adobe PDF""",1,2)
#
# Contingency 22 Lose Lakeside B61
#
psspy.case(r"""CASENAME.sav""")
psspy.case_title_data(r"""LABEL""",r"""C33 Lose 103H-B61""")
psspy.two_winding_data(199190,199195,r"""1""",[0,_i,_i,_i,_i,_i,_i,_i,_i,_i,0,0
,_i,_i,_i],[_f,_f,_f,_f,_f,_f,_f,_f,_f,_f,_f,_f,_f,_f,_f,_f,_f,_f,_f,_f,_f,_
f],"")
psspy.branch_data(199190,199197,r"""1""",[0,_i,_i,_i,_i,_i],[_f,_f,_f,_f,_f,_f,
_f,_f,_f,_f,_f,_f,_f,_f,_f])
psspy.dscn(199205)
psspy.dscn(199196)
psspy.dscn(199180)
psspy.fdns([0,0,0,1,1,0,99,0])
psspy.bsys(0,1,[ 69.0, 999.],2,[105,106],0,[],0,[],0,[])
```

```
psspy.diff(0,0,1,[0,0,0,0],[0.0,0.0,0.0],r"""CASENAME.sav""")
psspy.diff(0,1,2,[0,9,0,0],[0.0, 0.1,0.0],r"""CASENAME.sav""")
psspy.diff(0,1,3,[0,0,0,0],[0.0,0.0,0.0],r"""CASENAME.sav""")
psspy.vchk(0,0, 0.90, 1.1)
psspy.rate(0,0,1,RATING, 110.0)
os.rename('SEASON-HRM.pdf', 'CASENAME_PLOT043.pdf')
psspy.printdiagfile(r"""Adobe PDF""",1,2)
#
# Contingency 23 Lose Lakeside B62
#
psspy.case(r"""CASENAME.sav""")
psspy.case_title_data(r"""LABEL""",r"""C34 Lose 103H-B62""")
psspy.branch_data(199190,199208,r"""1""",[0,_i,_i,_i,_i,_i],[_f,_f,_f,_f,_f,_f,
_f,_f,_f,_f,_f,_f,_f,_f,_f])
psspy.branch_data(199190,199197,r"""1""",[0,_i,_i,_i,_i,_i],[_f,_f,_f,_f,_f,_f,
_f,_f,_f,_f,_f,_f,_f,_f,_f])
psspy.branch_data(199190,199184,r"""1""",[0,_i,_i,_i,_i,_i],[_f,_f,_f,_f,_f,_f,
_f,_f,_f,_f,_f,_f,_f,_f,_f])
psspy.dscn(199183)
psspy.dscn(199192)
psspy.dscn(199181)
psspy.fdns([0,0,0,1,1,0,99,0])
psspy.bsys(0,1,[ 69.0, 999.],2,[105,106],0,[],0,[],0,[])
psspy.diff(0,0,1,[0,0,0,0],[0.0,0.0,0.0],r"""CASENAME.sav""")
psspy.diff(0,1,2,[0,9,0,0],[0.0, 0.1,0.0],r"""CASENAME.sav""")
psspy.diff(0,1,3,[0,0,0,0],[0.0,0.0,0.0],r"""CASENAME.sav""")
psspy.vchk(0,0, 0.90, 1.1)
psspy.rate(0,0,1,RATING, 110.0)
os.rename('SEASON-HRM.pdf', 'CASENAME_PLOT044.pdf')
psspy.printdiagfile(r"""Adobe PDF""",1,2)
psspy.closediagfile()
psspy.close_powerflow()
os.rename('SEASON-HRM.pdf', 'CASENAME_PLOT045.pdf')
#
--------------------------------------------------------------------------------
---------------------
'''
Type B Contingecies - loss of two ckts on DCT
Messages are re-directed to a Log file
Results Summary is directed to a Results file.

This is the master file. Replace all "CASENAME" with the base case loadflow
filename prefix
as a separate file.  Then start PSSE in the local directory and run the py file

Ensure that the pdf print service is pointing to the working directory from the
control panel
and there are no files PLOT*.pdf on the directory
'''
#
--------------------------------------------------------------------------------
---------------------
#
psspy.case(r"""CASENAME.sav""")
psspy.opendiagfile(r"""SEASON-HRM.sld""")
```

```
psspy.fdns([0,0,0,1,1,0,99,0])
psspy.bsys(0,1,[ 69.0, 999.],2,[105,106],0,[],0,[],0,[])
psspy.vchk(0,0, 0.90, 1.1)
psspy.rate(0,0,1,RATING, 110.0)
psspy.printdiagfile(r"""Adobe PDF""",1,2)
#
# contingency B101 - DCT L6005+L6010
#
psspy.case_title_data(r"""LABEL""",r"""C35 DCT L6005+L6010""")
psspy.branch_data(199201,199184,r"""1""",[0,_i,_i,_i,_i,_i],[_f,_f,_f,_f,_f,_f,
_f,_f,_f,_f,_f,_f,_f,_f,_f])
psspy.dscn(199203)
psspy.bsys(0,1,[ 69.0, 999.],2,[105,106],0,[],0,[],0,[])
psspy.diff(0,0,1,[0,0,0,0],[0.0,0.0,0.0],r"""CASENAME.sav""")
psspy.diff(0,1,2,[0,9,0,0],[0.0, 0.1,0.0],r"""CASENAME.sav""")
psspy.diff(0,1,3,[0,0,0,0],[0.0,0.0,0.0],r"""CASENAME.sav""")
psspy.vchk(0,0, 0.90, 1.1)
psspy.rate(0,0,1,RATING, 110.0)
psspy.fdns([0,0,0,1,1,0,99,0])
os.rename('SEASON-HRM.pdf', 'CASENAME_PLOT046.pdf')
psspy.printdiagfile(r"""Adobe PDF""",1,2)
#
# contingency B102 DCT L6010 + L6011
#
psspy.case_title_data(r"""LABEL""",r"""C36 DCT L6010 + L6011""")
psspy.case(r"""CASENAME.sav""")
psspy.branch_data(199201,199302,r"""1""",[0,_i,_i,_i,_i,_i],[_f,_f,_f,_f,_f,_f,
_f,_f,_f,_f,_f,_f,_f,_f,_f])
psspy.dscn(199203)
psspy.fdns([0,0,0,1,1,0,99,0])
psspy.bsys(0,1,[ 69.0, 999.],2,[105,106],0,[],0,[],0,[])
psspy.diff(0,0,1,[0,0,0,0],[0.0,0.0,0.0],r"""CASENAME.sav""")
psspy.diff(0,1,2,[0,9,0,0],[0.0, 0.1,0.0],r"""CASENAME.sav""")
psspy.diff(0,1,3,[0,0,0,0],[0.0,0.0,0.0],r"""CASENAME.sav""")
psspy.vchk(0,0, 0.90, 1.1)
psspy.rate(0,0,1,RATING, 110.0)
os.rename('SEASON-HRM.pdf', 'CASENAME_PLOT047.PDF')
psspy.printdiagfile(r"""Adobe PDF""",1,2)
#
# contingency B103 - DCT L6005 L6016
#
psspy.case(r"""CASENAME.sav""")
psspy.case_title_data(r"""LABEL""",r"""C37 DCT L6005 L6016""")
psspy.dscn(199203)
psspy.dscn(199208)
psspy.dscn(199209)
psspy.fdns([0,0,0,1,1,0,99,0])
psspy.bsys(0,1,[ 69.0, 999.],2,[105,106],0,[],0,[],0,[])
psspy.diff(0,0,1,[0,0,0,0],[0.0,0.0,0.0],r"""CASENAME.sav""")
psspy.diff(0,1,2,[0,9,0,0],[0.0, 0.1,0.0],r"""CASENAME.sav""")
psspy.diff(0,1,3,[0,0,0,0],[0.0,0.0,0.0],r"""CASENAME.sav""")
psspy.vchk(0,0, 0.90, 1.1)
psspy.rate(0,0,1,RATING, 110.0)
os.rename('SEASON-HRM.pdf', 'CASENAME_PLOT048.pdf')
psspy.printdiagfile(r"""Adobe PDF""",1,2)
```

```
#
# contingency B104 DCT L6003 L6009
#
psspy.case(r"""CASENAME.sav""")
psspy.case_title_data(r"""LABEL""",r"""C38 DCT L6003 L6009""")
psspy.branch_data(199184,199165,r"""1""",[0,_i,_i,_i,_i,_i],[_f,_f,_f,_f,_f,_f,
_f,_f,_f,_f,_f,_f,_f,_f,_f])
psspy.dscn(199185)
psspy.dscn(199186)
psspy.fdns([0,0,0,1,1,0,99,0])
psspy.bsys(0,1,[ 69.0, 999.],2,[105,106],0,[],0,[],0,[])
psspy.diff(0,0,1,[0,0,0,0],[0.0,0.0,0.0],r"""CASENAME.sav""")
psspy.diff(0,1,2,[0,9,0,0],[0.0, 0.1,0.0],r"""CASENAME.sav""")
psspy.diff(0,1,3,[0,0,0,0],[0.0,0.0,0.0],r"""CASENAME.sav""")
psspy.vchk(0,0, 0.90, 1.1)
psspy.rate(0,0,1,RATING, 110.0)
os.rename('SEASON-HRM.pdf', 'CASENAME_PLOT049.pdf')
psspy.printdiagfile(r"""Adobe PDF""",1,2)
#
# contingency B105 - DCT L6003 L6007
#
psspy.case(r"""CASENAME.sav""")
psspy.case_title_data(r"""LABEL""",r"""C39 DCT L6003 L6007""")
psspy.branch_data(199165,
199167,r"""1""",[0,_i,_i,_i,_i,_i],[_f,_f,_f,_f,_f,_f,_f,_f,_f,_f,_f,_f,_f,_f,_
f])
psspy.branch_data(199165,
199184,r"""1""",[0,_i,_i,_i,_i,_i],[_f,_f,_f,_f,_f,_f,_f,_f,_f,_f,_f,_f,_f,_f,_
f])
psspy.fdns([0,0,0,1,1,0,99,0])
psspy.bsys(0,1,[ 69.0, 999.],2,[105,106],0,[],0,[],0,[])
psspy.diff(0,0,1,[0,0,0,0],[0.0,0.0,0.0],r"""CASENAME.sav""")
psspy.diff(0,1,2,[0,9,0,0],[0.0, 0.1,0.0],r"""CASENAME.sav""")
psspy.diff(0,1,3,[0,0,0,0],[0.0,0.0,0.0],r"""CASENAME.sav""")
psspy.vchk(0,0, 0.90, 1.1)
psspy.rate(0,0,1,RATING, 110.0)
os.rename('SEASON-HRM.pdf', 'CASENAME_PLOT050.pdf')
psspy.printdiagfile(r"""Adobe PDF""",1,2)
#
# contingency B106 - DCT L7008 L7009
#
psspy.case(r"""CASENAME.sav""")
psspy.case_title_data(r"""LABEL""",r"""C40 DCT L7008 L7009 ISOLATES WEST""")
psspy.dscn(199240)
psspy.dscn(199241)
psspy.dscn(199292)
psspy.dscn(199367)
psspy.dscn(199368)
psspy.dscn(199369)
psspy.dscn(199261)
psspy.dscn(199262)
psspy.dscn(199260)
psspy.dscn(199259)
psspy.tree(1,0)
psspy.tree(2,1)
```

```
psspy.fdns([0,0,0,1,1,0,99,0])
psspy.bsys(0,1,[ 69.0, 999.],2,[105,106],0,[],0,[],0,[])
psspy.diff(0,0,1,[0,0,0,0],[0.0,0.0,0.0],r"""CASENAME.sav""")
psspy.diff(0,1,2,[0,9,0,0],[0.0, 0.1,0.0],r"""CASENAME.sav""")
psspy.diff(0,1,3,[0,0,0,0],[0.0,0.0,0.0],r"""CASENAME.sav""")
psspy.vchk(0,0, 0.90, 1.1)
psspy.rate(0,0,1,RATING, 110.0)
os.rename('SEASON-HRM.pdf', 'CASENAME_PLOT051.pdf')
psspy.printdiagfile(r"""Adobe PDF""",1,2)
#
# contingency C103 - 1P fault on L6016, BBU 622
#
psspy.case(r"""CASENAME.sav""")
psspy.case_title_data(r"""LABEL""",r"""C41 1P fault on L6016, BBU 622""")
psspy.dscn(199203)
psspy.dscn(199208)
psspy.dscn(199209)
psspy.fdns([0,0,0,1,1,0,99,0])
psspy.bsys(0,1,[ 69.0, 999.],2,[105,106],0,[],0,[],0,[])
psspy.diff(0,0,1,[0,0,0,0],[0.0,0.0,0.0],r"""CASENAME.sav""")
psspy.diff(0,1,2,[0,9,0,0],[0.0, 0.1,0.0],r"""CASENAME.sav""")
psspy.diff(0,1,3,[0,0,0,0],[0.0,0.0,0.0],r"""CASENAME.sav""")
psspy.vchk(0,0, 0.90, 1.1)
psspy.rate(0,0,1,RATING, 110.0)
os.rename('SEASON-HRM.pdf', 'CASENAME_PLOT052.pdf')
psspy.printdiagfile(r"""Adobe PDF""",1,2)
#
# contingency C104 - 1P L6033, BBU 103H-632
#
psspy.case(r"""CASENAME.sav""")
psspy.case_title_data(r"""LABEL""",r"""C42 1P L6033, BBU 103H-632""")
psspy.dscn(199197)
psspy.dscn(199205)
psspy.two_winding_data(199190,199195,r"""1""",[0,_i,_i,_i,_i,_i,_i,_i,_i,_i,0,0
,_i,_i,_i],[_f,_f,_f,_f,_f,_f,_f,_f,_f,_f,_f,_f,_f,_f,_f,_f,_f,_f,_f,_f,_f,_
f],"")
psspy.tree(1,0)
psspy.tree(2,1)
psspy.fdns([0,0,0,1,1,0,99,0])
psspy.bsys(0,1,[ 69.0, 999.],2,[105,106],0,[],0,[],0,[])
psspy.diff(0,0,1,[0,0,0,0],[0.0,0.0,0.0],r"""CASENAME.sav""")
psspy.diff(0,1,2,[0,9,0,0],[0.0, 0.1,0.0],r"""CASENAME.sav""")
psspy.diff(0,1,3,[0,0,0,0],[0.0,0.0,0.0],r"""CASENAME.sav""")
psspy.vchk(0,0, 0.90, 1.1)
psspy.rate(0,0,1,RATING, 110.0)
os.rename('SEASON-HRM.pdf', 'CASENAME_PLOT053.pdf')
psspy.printdiagfile(r"""Adobe PDF""",1,2)
#
# contingency C105 - BBU L6005 L6010 90h-608
#
psspy.case(r"""CASENAME.sav""")
psspy.case_title_data(r"""LABEL""",r"""C43 BBU L6005 L6010 90h-608""")
psspy.dscn(199203)
psspy.branch_data(199201,
199184,r"""1""",[0,_i,_i,_i,_i,_i],[_f,_f,_f,_f,_f,_f,_f,_f,_f,_f,_f,_f,_f,_f,_
```

```
f])
psspy.fdns([0,0,0,1,1,0,99,0])
psspy.bsys(0,1,[ 69.0, 999.],2,[105,106],0,[],0,[],0,[])
psspy.diff(0,0,1,[0,0,0,0],[0.0,0.0,0.0],r"""CASENAME.sav""")
psspy.diff(0,1,2,[0,9,0,0],[0.0, 0.1,0.0],r"""CASENAME.sav""")
psspy.diff(0,1,3,[0,0,0,0],[0.0,0.0,0.0],r"""CASENAME.sav""")
psspy.vchk(0,0, 0.90, 1.1)
psspy.rate(0,0,1,RATING, 110.0)
os.rename('SEASON-HRM.pdf', 'CASENAME_PLOT054.pdf')
psspy.printdiagfile(r"""Adobe PDF""",1,2)
#
# contingency C106 - BBU L6008 L6009 90H-611
#
psspy.case(r"""CASENAME.sav""")
psspy.case_title_data(r"""LABEL""",r"""C44 BBU L6008 L6009 90H-611""")
psspy.branch_data(199184,
199190,r"""1""",[0,_i,_i,_i,_i,_i],[_f,_f,_f,_f,_f,_f,_f,_f,_f,_f,_f,_f,_f,_f,_
f])
psspy.dscn(199185)
psspy.dscn(199186)
psspy.fdns([0,0,0,1,1,0,99,0])
psspy.bsys(0,1,[ 69.0, 999.],2,[105,106],0,[],0,[],0,[])
psspy.diff(0,0,1,[0,0,0,0],[0.0,0.0,0.0],r"""CASENAME.sav""")
psspy.diff(0,1,2,[0,9,0,0],[0.0, 0.1,0.0],r"""CASENAME.sav""")
psspy.diff(0,1,3,[0,0,0,0],[0.0,0.0,0.0],r"""CASENAME.sav""")
psspy.vchk(0,0, 0.90, 1.1)
psspy.rate(0,0,1,RATING, 110.0)
os.rename('SEASON-HRM.pdf', 'CASENAME_PLOT055.pdf')
psspy.printdiagfile(r"""Adobe PDF""",1,2)
#
# Contingency C108 BBU on 91H-523
#
psspy.case(r"""CASENAME.sav""")
psspy.case_title_data(r"""LABEL""",r"""C45 BBU on 91H-523""")
psspy.branch_data(199166,
199170,r"""1""",[0,_i,_i,_i,_i,_i],[_f,_f,_f,_f,_f,_f,_f,_f,_f,_f,_f,_f,_f,_f,_
f])
psspy.branch_data(199187,
199165,r"""1""",[0,_i,_i,_i,_i,_i],[_f,_f,_f,_f,_f,_f,_f,_f,_f,_f,_f,_f,_f,_f,_
f])
psspy.branch_data(199187,
199165,r"""1""",[0,_i,_i,_i,_i,_i],[_f,_f,_f,_f,_f,_f,_f,_f,_f,_f,_f,_f,_f,_f,_
f])
psspy.dscn(199167)
psspy.dscn(199168)
psspy.dscn(199166)
psspy.dscn(199164)
psspy.dscn(199181)
psspy.dscn(199182)
psspy.dscn(199158)
psspy.dscn(199161)
psspy.dscn(199181)
psspy.dscn(199182)
psspy.dscn(199164)
psspy.dscn(199175)
```

```
psspy.dscn(199176)
psspy.tree(1,0)
psspy.tree(2,1)
psspy.tree(2,1)
psspy.fdns([0,0,0,1,1,0,99,0])
psspy.bsys(0,1,[ 69.0, 999.],2,[105,106],0,[],0,[],0,[])
psspy.diff(0,0,1,[0,0,0,0],[0.0,0.0,0.0],r"""CASENAME.sav""")
psspy.diff(0,1,2,[0,9,0,0],[0.0, 0.1,0.0],r"""CASENAME.sav""")
psspy.diff(0,1,3,[0,0,0,0],[0.0,0.0,0.0],r"""CASENAME.sav""")
psspy.vchk(0,0, 0.90, 1.1)
psspy.rate(0,0,1,RATING, 110.0)
os.rename('SEASON-HRM.pdf', 'CASENAME_PLOT056.pdf')
psspy.printdiagfile(r"""Adobe PDF""",1,2)
#
# Contingency C110 1P L6009 BBU on 108H 607
#
psspy.case(r"""CASENAME.sav""")
psspy.case_title_data(r"""LABEL""",r"""C46 1P L6009 BBU on 108H 607""")
psspy.branch_data(199187,
199165,r"""1""",[0,_i,_i,_i,_i,_i],[_f,_f,_f,_f,_f,_f,_f,_f,_f,_f,_f,_f,_f,_f,_
f])
psspy.dscn(199185)
psspy.dscn(199159)
psspy.tree(1,0)
psspy.tree(2,1)
psspy.tree(1,0)
psspy.tree(2,1)
psspy.fdns([0,0,0,1,1,0,99,0])
psspy.bsys(0,1,[ 69.0, 999.],2,[105,106],0,[],0,[],0,[])
psspy.diff(0,0,1,[0,0,0,0],[0.0,0.0,0.0],r"""CASENAME.sav""")
psspy.diff(0,1,2,[0,9,0,0],[0.0, 0.1,0.0],r"""CASENAME.sav""")
psspy.diff(0,1,3,[0,0,0,0],[0.0,0.0,0.0],r"""CASENAME.sav""")
psspy.vchk(0,0, 0.90, 1.1)
psspy.rate(0,0,1,RATING, 110.0)
os.rename('SEASON-HRM.pdf', 'CASENAME_PLOT057.pdf')
psspy.printdiagfile(r"""Adobe PDF""",1,2)
#
# Contingency E101 1P 103H-600
#
psspy.case(r"""CASENAME.sav""")
psspy.case_title_data(r"""LABEL""",r"""C47 1P 103H-600""")
psspy.dscn(199190)
psspy.tree(1,0)
psspy.tree(2,1)
psspy.tree(2,1)
psspy.tree(2,1)
psspy.fdns([0,0,0,1,1,0,99,0])
psspy.bsys(0,1,[ 69.0, 999.],2,[105,106],0,[],0,[],0,[])
psspy.diff(0,0,1,[0,0,0,0],[0.0,0.0,0.0],r"""CASENAME.sav""")
psspy.diff(0,1,2,[0,9,0,0],[0.0, 0.1,0.0],r"""CASENAME.sav""")
psspy.diff(0,1,3,[0,0,0,0],[0.0,0.0,0.0],r"""CASENAME.sav""")
psspy.vchk(0,0, 0.90, 1.1)
psspy.rate(0,0,1,RATING, 110.0)
os.rename('SEASON-HRM.pdf', 'CASENAME_PLOT058.pdf')
psspy.printdiagfile(r"""Adobe PDF""",1,2)
```

```
#
# Contingency E103  1P on Breaker 91H523
#
psspy.case(r"""CASENAME.sav""")
psspy.case_title_data(r"""LABEL""",r"""C48 1P on Breaker 91H-523""")
psspy.two_winding_data(199166,199165,r"""1""",[0,_i,_i,_i,_i,_i,_i,_i,_i,_i,0,0
,_i,_i,_i],[_f,_f,_f,_f,_f,_f,_f,_f,_f,_f,_f,_f,_f,_f,_f,_f,_f,_f,_f,_f,_f,_
f],"")
psspy.branch_data(199166,
199170,r"""1""",[0,_i,_i,_i,_i,_i],[_f,_f,_f,_f,_f,_f,_f,_f,_f,_f,_f,_f,_f,_f,_
f])
psspy.fdns([0,0,0,1,1,0,99,0])
psspy.bsys(0,1,[ 69.0, 999.],2,[105,106],0,[],0,[],0,[])
psspy.diff(0,0,1,[0,0,0,0],[0.0,0.0,0.0],r"""CASENAME.sav""")
psspy.diff(0,1,2,[0,9,0,0],[0.0, 0.1,0.0],r"""CASENAME.sav""")
psspy.diff(0,1,3,[0,0,0,0],[0.0,0.0,0.0],r"""CASENAME.sav""")
psspy.vchk(0,0, 0.90, 1.1)
psspy.rate(0,0,1,RATING, 110.0)
os.rename('SEASON-HRM.pdf', 'CASENAME_PLOT059.pdf')
psspy.printdiagfile(r"""Adobe PDF""",1,2)
#
# Contingency E104 1 P on 104H-600
#
psspy.case(r"""CASENAME.sav""")
psspy.case_title_data(r"""LABEL""",r"""C49 1-Ph on 104H-600""")
psspy.dscn(199198)
psspy.dscn(199199)
psspy.fdns([0,0,0,1,1,0,99,0])
psspy.bsys(0,1,[ 69.0, 999.],2,[105,106],0,[],0,[],0,[])
psspy.diff(0,0,1,[0,0,0,0],[0.0,0.0,0.0],r"""CASENAME.sav""")
psspy.diff(0,1,2,[0,9,0,0],[0.0, 0.1,0.0],r"""CASENAME.sav""")
psspy.diff(0,1,3,[0,0,0,0],[0.0,0.0,0.0],r"""CASENAME.sav""")
psspy.vchk(0,0, 0.90, 1.1)
psspy.rate(0,0,1,RATING, 110.0)
os.rename('SEASON-HRM.pdf', 'CASENAME_PLOT060.pdf')
#
# Set up for BPS  contingencies
#
psspy.printdiagfile(r"""Adobe PDF""",1,2)
psspy.closediagfile()
psspy.case(r"""CASENAME.sav""")
psspy.opendiagfile(r"""SEASON-BPS.sld""")
psspy.fdns([0,0,0,1,1,0,99,0])
psspy.bsys(0,1,[ 69.0, 999.],2,[105,106],0,[],0,[],0,[])
psspy.diff(0,0,1,[0,0,0,0],[0.0,0.0,0.0],r"""CASENAME.sav""")
psspy.diff(0,1,2,[0,9,0,0],[0.0, 0.1,0.0],r"""CASENAME.sav""")
psspy.diff(0,1,3,[0,0,0,0],[0.0,0.0,0.0],r"""CASENAME.sav""")
psspy.vchk(0,0, 0.90, 1.1)
psspy.rate(0,0,1,RATING, 110.0)
os.rename('SEASON-HRM.pdf', 'CASENAME_PLOT061.pdf')
psspy.printdiagfile(r"""Adobe PDF""",1,2)#
#
# contingency C101 - 1P fault on L6507, BBU 79N-606
#
psspy.case(r"""CASENAME.sav""")
```

```
psspy.case_title_data(r"""LABEL""",r"""C50 1P fault on L6507, BBU 79N-606, no
SPS""")
psspy.branch_data(199121,
199090,r"""1""",[0,_i,_i,_i,_i,_i],[_f,_f,_f,_f,_f,_f,_f,_f,_f,_f,_f,_f,_f,_f,_
f])
psspy.branch_data(199121,
199090,r"""2""",[0,_i,_i,_i,_i,_i],[_f,_f,_f,_f,_f,_f,_f,_f,_f,_f,_f,_f,_f,_f,_
f])
psspy.branch_data(199120,
199045,r"""1""",[0,_i,_i,_i,_i,_i],[_f,_f,_f,_f,_f,_f,_f,_f,_f,_f,_f,_f,_f,_f,_
f])
psspy.branch_data(199120,
199045,r"""1""",[0,_i,_i,_i,_i,_i],[_f,_f,_f,_f,_f,_f,_f,_f,_f,_f,_f,_f,_f,_f,_
f])
psspy.fdns([0,0,0,1,1,0,99,0])
psspy.bsys(0,1,[ 69.0, 999.],2,[105,106],0,[],0,[],0,[])
psspy.diff(0,0,1,[0,0,0,0],[0.0,0.0,0.0],r"""CASENAME.sav""")
psspy.diff(0,1,2,[0,9,0,0],[0.0, 0.1,0.0],r"""CASENAME.sav""")
psspy.diff(0,1,3,[0,0,0,0],[0.0,0.0,0.0],r"""CASENAME.sav""")
psspy.vchk(0,0, 0.90, 1.1)
psspy.rate(0,0,1,RATING, 110.0)
os.rename('SEASON-BPS.pdf', 'CASENAME_PLOT062.pdf')
psspy.printdiagfile(r"""Adobe PDF""",1,2)
#
# contingency C101 - 1P fault on L6507, BBU 79N-606
#
psspy.case(r"""CASENAME.sav""")
psspy.case_title_data(r"""LABEL""",r"""C50s 1P fault on L6507, BBU 79N-606, 1
unit SPS""")
psspy.branch_data(199121,
199090,r"""1""",[0,_i,_i,_i,_i,_i],[_f,_f,_f,_f,_f,_f,_f,_f,_f,_f,_f,_f,_f,_f,_
f])
psspy.branch_data(199121,
199090,r"""2""",[0,_i,_i,_i,_i,_i],[_f,_f,_f,_f,_f,_f,_f,_f,_f,_f,_f,_f,_f,_f,_
f])
psspy.branch_data(199120,
199045,r"""1""",[0,_i,_i,_i,_i,_i],[_f,_f,_f,_f,_f,_f,_f,_f,_f,_f,_f,_f,_f,_f,_
f])
psspy.branch_data(199120,
199045,r"""1""",[0,_i,_i,_i,_i,_i],[_f,_f,_f,_f,_f,_f,_f,_f,_f,_f,_f,_f,_f,_f,_
f])
psspy.dscn(199004)
psspy.fdns([0,0,0,1,1,0,99,0])
psspy.bsys(0,1,[ 69.0, 999.],2,[105,106],0,[],0,[],0,[])
psspy.diff(0,0,1,[0,0,0,0],[0.0,0.0,0.0],r"""CASENAME.sav""")
psspy.diff(0,1,2,[0,9,0,0],[0.0, 0.1,0.0],r"""CASENAME.sav""")
psspy.diff(0,1,3,[0,0,0,0],[0.0,0.0,0.0],r"""CASENAME.sav""")
psspy.vchk(0,0, 0.90, 1.1)
psspy.rate(0,0,1,RATING, 110.0)
os.rename('SEASON-BPS.pdf', 'CASENAME_PLOT063.pdf')
psspy.printdiagfile(r"""Adobe PDF""",1,2)
#
# contingency C101 - 1P fault on L6507, BBU 79N-606
#
psspy.case(r"""CASENAME.sav""")
```

```
psspy.case_title_data(r"""LABEL""",r"""C50ss 1P fault on L6507, BBU 79N-606,
2-unit SPS""")
psspy.branch_data(199121,
199090,r"""1""",[0,_i,_i,_i,_i,_i],[_f,_f,_f,_f,_f,_f,_f,_f,_f,_f,_f,_f,_f,_f,_
f])
psspy.branch_data(199121,
199090,r"""2""",[0,_i,_i,_i,_i,_i],[_f,_f,_f,_f,_f,_f,_f,_f,_f,_f,_f,_f,_f,_f,_
f])
psspy.branch_data(199120,
199045,r"""1""",[0,_i,_i,_i,_i,_i],[_f,_f,_f,_f,_f,_f,_f,_f,_f,_f,_f,_f,_f,_f,_
f])
psspy.branch_data(199120,
199045,r"""1""",[0,_i,_i,_i,_i,_i],[_f,_f,_f,_f,_f,_f,_f,_f,_f,_f,_f,_f,_f,_f,_
f])
psspy.dscn(199002)
psspy.dscn(199004)
psspy.fdns([0,0,0,1,1,0,99,0])
psspy.bsys(0,1,[ 69.0, 999.],2,[105,106],0,[],0,[],0,[])
psspy.diff(0,0,1,[0,0,0,0],[0.0,0.0,0.0],r"""CASENAME.sav""")
psspy.diff(0,1,2,[0,9,0,0],[0.0, 0.1,0.0],r"""CASENAME.sav""")
psspy.diff(0,1,3,[0,0,0,0],[0.0,0.0,0.0],r"""CASENAME.sav""")
psspy.vchk(0,0, 0.90, 1.1)
psspy.rate(0,0,1,RATING, 110.0)
os.rename('SEASON-BPS.pdf', 'CASENAME_PLOT064.pdf')
psspy.printdiagfile(r"""Adobe PDF""",1,2)
#
# contingency C102 - 1P fault on 199110 Bus 61
#
psspy.case(r"""CASENAME.sav""")
psspy.case_title_data(r"""LABEL""",r"""C51 1P fault on 1N Bus 61""")
psspy.dscn(199110)
psspy.tree(1,0)
psspy.tree(2,1)
psspy.tree(2,1)
psspy.diff(0,0,1,[0,0,0,0],[0.0,0.0,0.0],r"""CASENAME.sav""")
psspy.diff(0,1,2,[0,9,0,0],[0.0, 0.1,0.0],r"""CASENAME.sav""")
psspy.diff(0,1,3,[0,0,0,0],[0.0,0.0,0.0],r"""CASENAME.sav""")
psspy.fdns([0,0,0,1,1,0,99,0])
psspy.bsys(0,1,[ 69.0, 999.],2,[105,106],0,[],0,[],0,[])
psspy.vchk(0,0, 0.90, 1.1)
psspy.rate(0,0,1,RATING, 110.0)
os.rename('SEASON-BPS.pdf', 'CASENAME_PLOT065.pdf')
psspy.printdiagfile(r"""Adobe PDF""",1,2)
#
# Contingency C107 BBU 47C601 199053
#
psspy.case(r"""CASENAME.sav""")
psspy.case_title_data(r"""LABEL""",r"""C52 BBU 47C-601""")
psspy.branch_data(199053,199051,r"""1""",[0,_i,_i,_i,_i,_i],[_f,_f,_f,_f,_f,_f,
_f,_f,_f,_f,_f,_f,_f,_f,_f])
psspy.dscn(199062)
psspy.fdns([0,0,0,1,1,0,99,0])
psspy.bsys(0,1,[ 69.0, 999.],2,[105,106],0,[],0,[],0,[])
psspy.diff(0,0,1,[0,0,0,0],[0.0,0.0,0.0],r"""CASENAME.sav""")
psspy.diff(0,1,2,[0,9,0,0],[0.0, 0.1,0.0],r"""CASENAME.sav""")
```

```
psspy.diff(0,1,3,[0,0,0,0],[0.0,0.0,0.0],r"""CASENAME.sav""")
psspy.vchk(0,0, 0.90, 1.1)
psspy.rate(0,0,1,RATING, 110.0)
os.rename('SEASON-BPS.pdf', 'CASENAME_PLOT066.pdf')
psspy.printdiagfile(r"""Adobe PDF""",1,2)
#
# Contingency E102 Breakr  47C-602 fault
#
psspy.case(r"""CASENAME.sav""")
psspy.case_title_data(r"""LABEL""",r"""C53 Breakr  47C-602 fault""")
psspy.dscn(199061)
psspy.dscn(199061)
psspy.fdns([0,0,0,1,1,0,99,0])
psspy.bsys(0,1,[ 69.0, 999.],2,[105,106],0,[],0,[],0,[])
psspy.diff(0,0,1,[0,0,0,0],[0.0,0.0,0.0],r"""CASENAME.sav""")
psspy.diff(0,1,2,[0,9,0,0],[0.0, 0.1,0.0],r"""CASENAME.sav""")
psspy.diff(0,1,3,[0,0,0,0],[0.0,0.0,0.0],r"""CASENAME.sav""")
psspy.vchk(0,0, 0.90, 1.1)
psspy.rate(0,0,1,RATING, 110.0)
os.rename('SEASON-BPS.pdf', 'CASENAME_PLOT067.pdf')
psspy.printdiagfile(r"""Adobe PDF""",1,2)
psspy.closediagfile()
os.rename('SEASON-BPS.pdf', 'CASENAME_PLOT068.pdf')
#
#
--------------------------------------------------------------------------------
---------------------
'''
Type B Contingecies for old BPS - loss of two ckts with BBU
Messages are re-directed to a Log file
Results Summary is directed to a Results file.

This is the master file. Replace all "CASENAME" with the base case loadflow
filename prefix
as a separate file.  Then start PSSE in the local directory and run the py file

Ensure that the pdf print service is pointing to the working directory from the
control panel
and there are no files PLOT*.pdf on the directory
'''
#
--------------------------------------------------------------------------------
---------------------
#
psspy.case(r"""CASENAME.sav""")
psspy.opendiagfile(r"""SEASON-BPS.sld""")
psspy.fdns([0,0,0,1,1,0,99,0])
psspy.bsys(0,1,[ 69.0, 999.],2,[105,106],0,[],0,[],0,[])
psspy.diff(0,0,1,[0,0,0,0],[0.0,0.0,0.0],r"""CASENAME.sav""")
psspy.diff(0,1,2,[0,9,0,0],[0.0, 0.1,0.0],r"""CASENAME.sav""")
psspy.diff(0,1,3,[0,0,0,0],[0.0,0.0,0.0],r"""CASENAME.sav""")
psspy.vchk(0,0, 0.90, 1.1)
psspy.rate(0,0,1,RATING, 110.0)
psspy.printdiagfile(r"""Adobe PDF""",1,2)
#
```

```
# contingency B01 - BBU on 88S-723
#
psspy.case_title_data(r"""LABEL""",r"""C54 BBU 88S-723 NO SPS""")
psspy.branch_data(199000,199050,r"""2""",[0,_i,_i,_i,_i,_i],[_f,_f,_f,_f,_f,_f,
_f,_f,_f,_f,_f,_f,_f,_f,_f])
psspy.dscn(199040)
psspy.fdns([0,0,0,1,1,0,99,0])
psspy.bsys(0,1,[ 69.0, 999.],2,[105,106],0,[],0,[],0,[])
psspy.vchk(0,0, 0.90, 1.1)
psspy.rate(0,0,1,RATING, 110.0)
os.rename('SEASON-BPS.pdf', 'CASENAME_PLOT069.pdf')
psspy.printdiagfile(r"""Adobe PDF""",1,2)
#
# contingency B01s - BBU on 88S0723 with SPS
#
psspy.case(r"""CASENAME.sav""")
psspy.case_title_data(r"""LABEL""",r"""C54s BBU 88S-723 WITH SPS """)
psspy.branch_data(199000,199050,r"""2""",[0,_i,_i,_i,_i,_i],[_f,_f,_f,_f,_f,_f,
_f,_f,_f,_f,_f,_f,_f,_f,_f])
psspy.dscn(199040)
psspy.dscn(199003)
psspy.fdns([0,0,0,1,1,0,99,0])
psspy.bsys(0,1,[ 69.0, 999.],2,[105,106],0,[],0,[],0,[])
psspy.diff(0,0,1,[0,0,0,0],[0.0,0.0,0.0],r"""CASENAME.sav""")
psspy.diff(0,1,2,[0,9,0,0],[0.0, 0.1,0.0],r"""CASENAME.sav""")
psspy.diff(0,1,3,[0,0,0,0],[0.0,0.0,0.0],r"""CASENAME.sav""")
psspy.vchk(0,0, 0.90, 1.1)
psspy.rate(0,0,1,RATING, 110.0)
os.rename('SEASON-BPS.pdf', 'CASENAME_PLOT070.pdf')
psspy.printdiagfile(r"""Adobe PDF""",1,2)
#
# contingency B04 - BBU on 67N-712
#
psspy.case(r"""CASENAME.sav""")
psspy.case_title_data(r"""LABEL""",r"""C55 BBU 67N-712 """)
psspy.branch_data(199130,199050,r"""3""",[0,_i,_i,_i,_i,_i],[_f,_f,_f,_f,_f,_f,
_f,_f,_f,_f,_f,_f,_f,_f,_f])
psspy.branch_data(199130,199200,r"""3""",[0,_i,_i,_i,_i,_i],[_f,_f,_f,_f,_f,_f,
_f,_f,_f,_f,_f,_f,_f,_f,_f])
psspy.fdns([0,0,0,1,1,0,99,0])
psspy.bsys(0,1,[ 69.0, 999.],2,[105,106],0,[],0,[],0,[])
psspy.diff(0,0,1,[0,0,0,0],[0.0,0.0,0.0],r"""CASENAME.sav""")
psspy.diff(0,1,2,[0,9,0,0],[0.0, 0.1,0.0],r"""CASENAME.sav""")
psspy.diff(0,1,3,[0,0,0,0],[0.0,0.0,0.0],r"""CASENAME.sav""")
psspy.vchk(0,0, 0.90, 1.1)
psspy.rate(0,0,1,RATING, 110.0)
os.rename('SEASON-BPS.pdf', 'CASENAME_PLOT071.pdf')
psspy.printdiagfile(r"""Adobe PDF""",1,2)
#
# contingency B05 - BBU on 67-811 no sps
#
psspy.case(r"""CASENAME.sav""")
psspy.case_title_data(r"""LABEL""",r"""C56 BBU 67N-811 L8003 + T82 NO SPS""")
psspy.branch_data(199120,199125,r"""1""",[0,_i,_i,_i,_i,_i],[_f,_f,_f,_f,_f,_f,
_f,_f,_f,_f,_f,_f,_f,_f,_f])
```

```
psspy.two_winding_data(199130,199125,r"""1""",[0,_i,_i,_i,_i,_i,_i,_i,_i,_i,0,0
,_i,_i,_i],[_f,_f,_f,_f,_f,_f,_f,_f,_f,_f,_f,_f,_f,_f,_f,_f,_f,_f,_f,_f,_f,_
f],"")
psspy.fdns([0,0,0,1,1,0,99,0])
psspy.bsys(0,1,[ 69.0, 999.],2,[105,106],0,[],0,[],0,[])
psspy.diff(0,0,1,[0,0,0,0],[0.0,0.0,0.0],r"""CASENAME.sav""")
psspy.diff(0,1,2,[0,9,0,0],[0.0, 0.1,0.0],r"""CASENAME.sav""")
psspy.diff(0,1,3,[0,0,0,0],[0.0,0.0,0.0],r"""CASENAME.sav""")
psspy.vchk(0,0, 0.90, 1.1)
psspy.rate(0,0,1,RATING, 110.0)
os.rename('SEASON-BPS.pdf', 'CASENAME_PLOT072.pdf')
psspy.printdiagfile(r"""Adobe PDF""",1,2)
#
# contingency B05s - BBU on 67-811 1 Unit SPS
#
psspy.case(r"""CASENAME.sav""")
psspy.case_title_data(r"""LABEL""",r"""C56s BBU 67N-811 L8003 + T82 1 unit
SPS""")
psspy.branch_data(199120,199125,r"""1""",[0,_i,_i,_i,_i,_i],[_f,_f,_f,_f,_f,_f,
_f,_f,_f,_f,_f,_f,_f,_f,_f])
psspy.two_winding_data(199130,199125,r"""1""",[0,_i,_i,_i,_i,_i,_i,_i,_i,_i,0,0
,_i,_i,_i],[_f,_f,_f,_f,_f,_f,_f,_f,_f,_f,_f,_f,_f,_f,_f,_f,_f,_f,_f,_f,_f,_
f],"")
psspy.dscn(199004)
psspy.fdns([0,0,0,1,1,0,99,0])
psspy.bsys(0,1,[ 69.0, 999.],2,[105,106],0,[],0,[],0,[])
psspy.diff(0,0,1,[0,0,0,0],[0.0,0.0,0.0],r"""CASENAME.sav""")
psspy.diff(0,1,2,[0,9,0,0],[0.0, 0.1,0.0],r"""CASENAME.sav""")
psspy.diff(0,1,3,[0,0,0,0],[0.0,0.0,0.0],r"""CASENAME.sav""")
psspy.vchk(0,0, 0.90, 1.1)
psspy.rate(0,0,1,RATING, 110.0)
os.rename('SEASON-BPS.pdf', 'CASENAME_PLOT073.pdf')
psspy.printdiagfile(r"""Adobe PDF""",1,2)
#
# contingency B05s - BBU on 67-811 2 Unit SPS
#
psspy.case(r"""CASENAME.sav""")
psspy.case_title_data(r"""LABEL""",r"""C56ss BBU 67N-811 L8003 + T82 2 unit
SPS""")
psspy.branch_data(199120,199125,r"""1""",[0,_i,_i,_i,_i,_i],[_f,_f,_f,_f,_f,_f,
_f,_f,_f,_f,_f,_f,_f,_f,_f])
psspy.two_winding_data(199130,199125,r"""1""",[0,_i,_i,_i,_i,_i,_i,_i,_i,_i,0,0
,_i,_i,_i],[_f,_f,_f,_f,_f,_f,_f,_f,_f,_f,_f,_f,_f,_f,_f,_f,_f,_f,_f,_f,_f,_
f],"")
psspy.dscn(199004)
psspy.dscn(199002)
psspy.fdns([0,0,0,1,1,0,99,0])
psspy.bsys(0,1,[ 69.0, 999.],2,[105,106],0,[],0,[],0,[])
psspy.diff(0,0,1,[0,0,0,0],[0.0,0.0,0.0],r"""CASENAME.sav""")
psspy.diff(0,1,2,[0,9,0,0],[0.0, 0.1,0.0],r"""CASENAME.sav""")
psspy.diff(0,1,3,[0,0,0,0],[0.0,0.0,0.0],r"""CASENAME.sav""")
psspy.vchk(0,0, 0.90, 1.1)
psspy.rate(0,0,1,RATING, 110.0)
os.rename('SEASON-BPS.pdf', 'CASENAME_PLOT074.pdf')
psspy.printdiagfile(r"""Adobe PDF""",1,2)
```

```
#
# contingency B06 - BBU on 67-812
#
psspy.case(r"""CASENAME.sav""")
psspy.case_title_data(r"""LABEL""",r"""C57 BBU 67N-812 L8003+L8002 NO SPS""")
psspy.branch_data(199120,199125,r"""1""",[0,_i,_i,_i,_i,_i],[_f,_f,_f,_f,_f,_f,
_f,_f,_f,_f,_f,_f,_f,_f,_f])
psspy.branch_data(199195,199125,r"""1""",[0,_i,_i,_i,_i,_i],[_f,_f,_f,_f,_f,_f,
_f,_f,_f,_f,_f,_f,_f,_f,_f])
psspy.fdns([0,0,0,1,1,0,99,0])
psspy.bsys(0,1,[ 69.0, 999.],2,[105,106],0,[],0,[],0,[])
psspy.diff(0,0,1,[0,0,0,0],[0.0,0.0,0.0],r"""CASENAME.sav""")
psspy.diff(0,1,2,[0,9,0,0],[0.0, 0.1,0.0],r"""CASENAME.sav""")
psspy.diff(0,1,3,[0,0,0,0],[0.0,0.0,0.0],r"""CASENAME.sav""")
psspy.vchk(0,0, 0.90, 1.1)
psspy.rate(0,0,1,RATING, 110.0)
os.rename('SEASON-BPS.pdf', 'CASENAME_PLOT075.pdf')
psspy.printdiagfile(r"""Adobe PDF""",1,2)
#
# contingency B06s - BBU on 67-812 with 1-unit SPS
#
psspy.case(r"""CASENAME.sav""")
psspy.case_title_data(r"""LABEL""",r"""C57s BBU 67N-812 1-unit SPS """)
psspy.branch_data(199120,199125,r"""1""",[0,_i,_i,_i,_i,_i],[_f,_f,_f,_f,_f,_f,
_f,_f,_f,_f,_f,_f,_f,_f,_f])
psspy.branch_data(199195,199125,r"""1""",[0,_i,_i,_i,_i,_i],[_f,_f,_f,_f,_f,_f,
_f,_f,_f,_f,_f,_f,_f,_f,_f])
psspy.dscn(199004)
psspy.fdns([0,0,0,1,1,0,99,0])
psspy.bsys(0,1,[ 69.0, 999.],2,[105,106],0,[],0,[],0,[])
psspy.diff(0,0,1,[0,0,0,0],[0.0,0.0,0.0],r"""CASENAME.sav""")
psspy.diff(0,1,2,[0,9,0,0],[0.0, 0.1,0.0],r"""CASENAME.sav""")
psspy.diff(0,1,3,[0,0,0,0],[0.0,0.0,0.0],r"""CASENAME.sav""")
psspy.vchk(0,0, 0.90, 1.1)
psspy.rate(0,0,1,RATING, 110.0)
os.rename('SEASON-BPS.pdf', 'CASENAME_PLOT076.pdf')
psspy.printdiagfile(r"""Adobe PDF""",1,2)
#
# contingency B06ss - BBU on 67-812 with 2-unit SPS
#
psspy.case(r"""CASENAME.sav""")
psspy.case_title_data(r"""LABEL""",r"""C57ss BBU 67N-812 2-unit SPS """)
psspy.branch_data(199120,199125,r"""1""",[0,_i,_i,_i,_i,_i],[_f,_f,_f,_f,_f,_f,
_f,_f,_f,_f,_f,_f,_f,_f,_f])
psspy.branch_data(199195,199125,r"""1""",[0,_i,_i,_i,_i,_i],[_f,_f,_f,_f,_f,_f,
_f,_f,_f,_f,_f,_f,_f,_f,_f])
psspy.dscn(199004)
psspy.dscn(199002)
psspy.fdns([0,0,0,1,1,0,99,0])
psspy.bsys(0,1,[ 69.0, 999.],2,[105,106],0,[],0,[],0,[])
psspy.diff(0,0,1,[0,0,0,0],[0.0,0.0,0.0],r"""CASENAME.sav""")
psspy.diff(0,1,2,[0,9,0,0],[0.0, 0.1,0.0],r"""CASENAME.sav""")
psspy.diff(0,1,3,[0,0,0,0],[0.0,0.0,0.0],r"""CASENAME.sav""")
psspy.vchk(0,0, 0.90, 1.1)
psspy.rate(0,0,1,RATING, 110.0)
```

```
os.rename('SEASON-BPS.pdf', 'CASENAME_PLOT077.pdf')
psspy.printdiagfile(r"""Adobe PDF""",1,2)
#
# contingency B07 - BBU on 79N-810 no SPS
#
psspy.case(r"""CASENAME.sav""")
psspy.case_title_data(r"""LABEL""",r"""C58 BBU 79N-810 no SPS """)
psspy.branch_data(199120,199045,r"""1""",[0,_i,_i,_i,_i,_i],[_f,_f,_f,_f,_f,_f,
_f,_f,_f,_f,_f,_f,_f,_f,_f])
psspy.branch_data(199120,199125,r"""1""",[0,_i,_i,_i,_i,_i],[_f,_f,_f,_f,_f,_f,
_f,_f,_f,_f,_f,_f,_f,_f,_f])
psspy.fdns([0,0,0,1,1,0,99,0])
psspy.bsys(0,1,[ 69.0, 999.],2,[105,106],0,[],0,[],0,[])
psspy.diff(0,0,1,[0,0,0,0],[0.0,0.0,0.0],r"""CASENAME.sav""")
psspy.diff(0,1,2,[0,9,0,0],[0.0, 0.1,0.0],r"""CASENAME.sav""")
psspy.diff(0,1,3,[0,0,0,0],[0.0,0.0,0.0],r"""CASENAME.sav""")
psspy.vchk(0,0, 0.90, 1.1)
psspy.rate(0,0,1,RATING, 110.0)
os.rename('SEASON-BPS.pdf', 'CASENAME_PLOT078.pdf')
psspy.printdiagfile(r"""Adobe PDF""",1,2)
#
# contingency B07s - BBU on 79N-810 with 1-unit SPS
#
psspy.case(r"""CASENAME.sav""")
psspy.case_title_data(r"""LABEL""",r"""C58s BBU 79N-810 1-unit SPS """)
psspy.branch_data(199120,199045,r"""1""",[0,_i,_i,_i,_i,_i],[_f,_f,_f,_f,_f,_f,
_f,_f,_f,_f,_f,_f,_f,_f,_f])
psspy.branch_data(199120,199125,r"""1""",[0,_i,_i,_i,_i,_i],[_f,_f,_f,_f,_f,_f,
_f,_f,_f,_f,_f,_f,_f,_f,_f])
psspy.dscn(199004)
psspy.fdns([0,0,0,1,1,0,99,0])
psspy.bsys(0,1,[ 69.0, 999.],2,[105,106],0,[],0,[],0,[])
psspy.diff(0,0,1,[0,0,0,0],[0.0,0.0,0.0],r"""CASENAME.sav""")
psspy.diff(0,1,2,[0,9,0,0],[0.0, 0.1,0.0],r"""CASENAME.sav""")
psspy.diff(0,1,3,[0,0,0,0],[0.0,0.0,0.0],r"""CASENAME.sav""")
psspy.vchk(0,0, 0.90, 1.1)
psspy.rate(0,0,1,RATING, 110.0)
os.rename('SEASON-BPS.pdf', 'CASENAME_PLOT079.pdf')
psspy.printdiagfile(r"""Adobe PDF""",1,2)
#
# contingency B07ss - BBU on 79N-810 with 2-unit SPS
#
psspy.case(r"""CASENAME.sav""")
psspy.case_title_data(r"""LABEL""",r"""C58ss BBU 79N-810 2-unit SPS """)
psspy.branch_data(199120,199045,r"""1""",[0,_i,_i,_i,_i,_i],[_f,_f,_f,_f,_f,_f,
_f,_f,_f,_f,_f,_f,_f,_f,_f])
psspy.branch_data(199120,199125,r"""1""",[0,_i,_i,_i,_i,_i],[_f,_f,_f,_f,_f,_f,
_f,_f,_f,_f,_f,_f,_f,_f,_f])
psspy.dscn(199004)
psspy.dscn(199002)
psspy.fdns([0,0,0,1,1,0,99,0])
psspy.bsys(0,1,[ 69.0, 999.],2,[105,106],0,[],0,[],0,[])
psspy.diff(0,0,1,[0,0,0,0],[0.0,0.0,0.0],r"""CASENAME.sav""")
psspy.diff(0,1,2,[0,9,0,0],[0.0, 0.1,0.0],r"""CASENAME.sav""")
psspy.diff(0,1,3,[0,0,0,0],[0.0,0.0,0.0],r"""CASENAME.sav""")
```

```
psspy.vchk(0,0, 0.90, 1.1)
psspy.rate(0,0,1,RATING, 110.0)
os.rename('SEASON-BPS.pdf', 'CASENAME_PLOT080.pdf')
psspy.printdiagfile(r"""Adobe PDF""",1,2)
#
# contingency B08 - BBU on 88S-721
#
psspy.case(r"""CASENAME.sav""")
psspy.case_title_data(r"""LABEL""",r"""C59 BBU 88S-721 Trip Lingan 3 and 4""")
psspy.dscn(199004)
psspy.dscn(199003)
psspy.fdns([0,0,0,1,1,0,99,0])
psspy.bsys(0,1,[ 69.0, 999.],2,[105,106],0,[],0,[],0,[])
psspy.diff(0,0,1,[0,0,0,0],[0.0,0.0,0.0],r"""CASENAME.sav""")
psspy.diff(0,1,2,[0,9,0,0],[0.0, 0.1,0.0],r"""CASENAME.sav""")
psspy.diff(0,1,3,[0,0,0,0],[0.0,0.0,0.0],r"""CASENAME.sav""")
psspy.vchk(0,0, 0.90, 1.1)
psspy.rate(0,0,1,RATING, 110.0)
os.rename('SEASON-BPS.pdf', 'CASENAME_PLOT081.pdf')
psspy.printdiagfile(r"""Adobe PDF""",1,2)
#
# contingency C01 - DCT on L7003+L7004
#
psspy.case(r"""CASENAME.sav""")
psspy.case_title_data(r"""LABEL""",r"""C60 DCT on L7003+L7004 """)
psspy.branch_data(199050,199130,r"""1""",[0,_i,_i,_i,_i,_i],[_f,_f,_f,_f,_f,_f,
_f,_f,_f,_f,_f,_f,_f,_f,_f])
psspy.branch_data(199050,199590,r"""2""",[0,_i,_i,_i,_i,_i],[_f,_f,_f,_f,_f,_f,
_f,_f,_f,_f,_f,_f,_f,_f,_f])
psspy.fdns([0,0,0,1,1,0,99,0])
psspy.bsys(0,1,[ 69.0, 999.],2,[105,106],0,[],0,[],0,[])
psspy.diff(0,0,1,[0,0,0,0],[0.0,0.0,0.0],r"""CASENAME.sav""")
psspy.diff(0,1,2,[0,9,0,0],[0.0, 0.1,0.0],r"""CASENAME.sav""")
psspy.diff(0,1,3,[0,0,0,0],[0.0,0.0,0.0],r"""CASENAME.sav""")
psspy.vchk(0,0, 0.90, 1.1)
psspy.rate(0,0,1,RATING, 110.0)
os.rename('SEASON-BPS.pdf', 'CASENAME_PLOT082.pdf')
psspy.printdiagfile(r"""Adobe PDF""",1,2)
#
# contingency C04 - DCT on StraitCrossing no SPS
#
psspy.case(r"""CASENAME.sav""")
psspy.case_title_data(r"""LABEL""",r"""C61 DCT on Strait Crossing Lose
L8004-L7005 no SPS""")
psspy.branch_data(199050,199130,r"""3""",[0,_i,_i,_i,_i,_i],[_f,_f,_f,_f,_f,_f,
_f,_f,_f,_f,_f,_f,_f,_f,_f])
psspy.branch_data(199045,199120,r"""1""",[0,_i,_i,_i,_i,_i],[_f,_f,_f,_f,_f,_f,
_f,_f,_f,_f,_f,_f,_f,_f,_f])
psspy.fdns([0,0,0,1,1,0,99,0])
psspy.bsys(0,1,[ 69.0, 999.],2,[105,106],0,[],0,[],0,[])
psspy.diff(0,0,1,[0,0,0,0],[0.0,0.0,0.0],r"""CASENAME.sav""")
psspy.diff(0,1,2,[0,9,0,0],[0.0, 0.1,0.0],r"""CASENAME.sav""")
psspy.diff(0,1,3,[0,0,0,0],[0.0,0.0,0.0],r"""CASENAME.sav""")
psspy.vchk(0,0, 0.90, 1.1)
psspy.rate(0,0,1,RATING, 110.0)
```

```
os.rename('SEASON-BPS.pdf', 'CASENAME_PLOT083.pdf')
psspy.printdiagfile(r"""Adobe PDF""",1,2)
#
# contingency C04s - DCT on StraitCrossing with 1-unit SPS
#
psspy.case(r"""CASENAME.sav""")
psspy.case_title_data(r"""LABEL""",r"""C61s DCT on Strait Crossing L8004-L7005
with 1-unit SPS""")
psspy.branch_data(199050,199130,r"""3""",[0,_i,_i,_i,_i,_i],[_f,_f,_f,_f,_f,_f,
_f,_f,_f,_f,_f,_f,_f,_f,_f])
psspy.branch_data(199045,199120,r"""1""",[0,_i,_i,_i,_i,_i],[_f,_f,_f,_f,_f,_f,
_f,_f,_f,_f,_f,_f,_f,_f,_f])
psspy.dscn(199002)
psspy.fdns([0,0,0,1,1,0,99,0])
psspy.bsys(0,1,[ 69.0, 999.],2,[105,106],0,[],0,[],0,[])
psspy.diff(0,0,1,[0,0,0,0],[0.0,0.0,0.0],r"""CASENAME.sav""")
psspy.diff(0,1,2,[0,9,0,0],[0.0, 0.1,0.0],r"""CASENAME.sav""")
psspy.diff(0,1,3,[0,0,0,0],[0.0,0.0,0.0],r"""CASENAME.sav""")
psspy.vchk(0,0, 0.90, 1.1)
psspy.rate(0,0,1,RATING, 110.0)
os.rename('SEASON-BPS.pdf', 'CASENAME_PLOT084.pdf')
psspy.printdiagfile(r"""Adobe PDF""",1,2)
#
# contingency C04ss - DCT on StraitCrossing with 2-unit SPS
#
psspy.case(r"""CASENAME.sav""")
psspy.case_title_data(r"""LABEL""",r"""C61ss DCT on Strait Crossing L8004-L7005
with 2-unit SPS""")
psspy.branch_data(199050,199130,r"""3""",[0,_i,_i,_i,_i,_i],[_f,_f,_f,_f,_f,_f,
_f,_f,_f,_f,_f,_f,_f,_f,_f])
psspy.branch_data(199045,199120,r"""1""",[0,_i,_i,_i,_i,_i],[_f,_f,_f,_f,_f,_f,
_f,_f,_f,_f,_f,_f,_f,_f,_f])
psspy.dscn(199002)
psspy.dscn(199004)
psspy.fdns([0,0,0,1,1,0,99,0])
psspy.bsys(0,1,[ 69.0, 999.],2,[105,106],0,[],0,[],0,[])
psspy.diff(0,0,1,[0,0,0,0],[0.0,0.0,0.0],r"""CASENAME.sav""")
psspy.diff(0,1,2,[0,9,0,0],[0.0, 0.1,0.0],r"""CASENAME.sav""")
psspy.diff(0,1,3,[0,0,0,0],[0.0,0.0,0.0],r"""CASENAME.sav""")
psspy.vchk(0,0, 0.90, 1.1)
psspy.rate(0,0,1,RATING, 110.0)
os.rename('SEASON-BPS.pdf', 'CASENAME_PLOT085.pdf')
psspy.printdiagfile(r"""Adobe PDF""",1,2)
#
# contingency D04 - Fault on breaker 88S-721 Trips Lingan 3 and 4
#
psspy.case(r"""CASENAME.sav""")
psspy.case_title_data(r"""LABEL""",r"""C62 Fault on breaker 88S-721 Trips
Lingan 3 and 4""")
psspy.dscn(199003)
psspy.dscn(199004)
psspy.fdns([0,0,0,1,1,0,99,0])
psspy.bsys(0,1,[ 69.0, 999.],2,[105,106],0,[],0,[],0,[])
psspy.diff(0,0,1,[0,0,0,0],[0.0,0.0,0.0],r"""CASENAME.sav""")
psspy.diff(0,1,2,[0,9,0,0],[0.0, 0.1,0.0],r"""CASENAME.sav""")
```

```
psspy.diff(0,1,3,[0,0,0,0],[0.0,0.0,0.0],r"""CASENAME.sav""")
psspy.vchk(0,0, 0.90, 1.1)
psspy.rate(0,0,1,RATING, 110.0)
os.rename('SEASON-BPS.pdf', 'CASENAME_PLOT086.pdf')
psspy.printdiagfile(r"""Adobe PDF""",1,2)
#
# contingency B10 - Fault on Salisbury SA3-2 Trips L3006 and L3017
#
psspy.case(r"""CASENAME.sav""")
psspy.case_title_data(r"""LABEL""",r"""C63 Fault on Salisbury SA3-2 Trips L3006
and L3017""")
psspy.branch_data(190320,190402,r"""1""",[0,_i,_i,_i,_i,_i],[_f,_f,_f,_f,_f,_f,
_f,_f,_f,_f,_f,_f,_f,_f,_f])
psspy.dscn(190432)
psspy.fdns([0,0,0,1,1,0,99,0])
psspy.bsys(0,1,[ 69.0, 999.],2,[105,106],0,[],0,[],0,[])
psspy.diff(0,0,1,[0,0,0,0],[0.0,0.0,0.0],r"""CASENAME.sav""")
psspy.diff(0,1,2,[0,9,0,0],[0.0, 0.1,0.0],r"""CASENAME.sav""")
psspy.diff(0,1,3,[0,0,0,0],[0.0,0.0,0.0],r"""CASENAME.sav""")
psspy.vchk(0,0, 0.90, 1.1)
psspy.rate(0,0,1,RATING, 110.0)
os.rename('SEASON-BPS.pdf', 'CASENAME_PLOT087.pdf')
psspy.printdiagfile(r"""Adobe PDF""",1,2)
#
# contingency B11 - Fault on breaker Salisbury Breaker SA3-4 Trips L3013 and T2
#
psspy.case(r"""CASENAME.sav""")
psspy.case_title_data(r"""LABEL""",r"""C64 Fault on breaker Salisbury Breaker
SA3-4 Trips L3013 and T2""")
psspy.two_winding_data(190200,190320,r"""1""",[0,_i,_i,_i,_i,_i,_i,_i,_i,_i,0,0
,_i,_i,_i],[_f,_f,_f,_f,_f,_f,_f,_f,_f,_f,_f,_f,_f,_f,_f,_f,_f,_f,_f,_f,_f,_
f],"")
psspy.branch_data(190320,190498,r"""1""",[0,_i,_i,_i,_i,_i],[_f,_f,_f,_f,_f,_f,
_f,_f,_f,_f,_f,_f,_f,_f,_f])
psspy.fdns([0,0,0,1,1,0,99,0])
psspy.bsys(0,1,[ 69.0, 999.],2,[105,106],0,[],0,[],0,[])
psspy.diff(0,0,1,[0,0,0,0],[0.0,0.0,0.0],r"""CASENAME.sav""")
psspy.diff(0,1,2,[0,9,0,0],[0.0, 0.1,0.0],r"""CASENAME.sav""")
psspy.diff(0,1,3,[0,0,0,0],[0.0,0.0,0.0],r"""CASENAME.sav""")
psspy.vchk(0,0, 0.90, 1.1)
psspy.rate(0,0,1,RATING, 110.0)
os.rename('SEASON-BPS.pdf', 'CASENAME_PLOT088.pdf')
psspy.printdiagfile(r"""Adobe PDF""",1,2)
psspy.close_powerflow()
os.rename('SEASON-BPS.pdf', 'CASENAME_PLOT089.pdf')
#
psspy.stop(1)
```

NSX 0.1 MW
CBX 731.8 MW
ONI 961.2 MW
ONS 850.7 MW

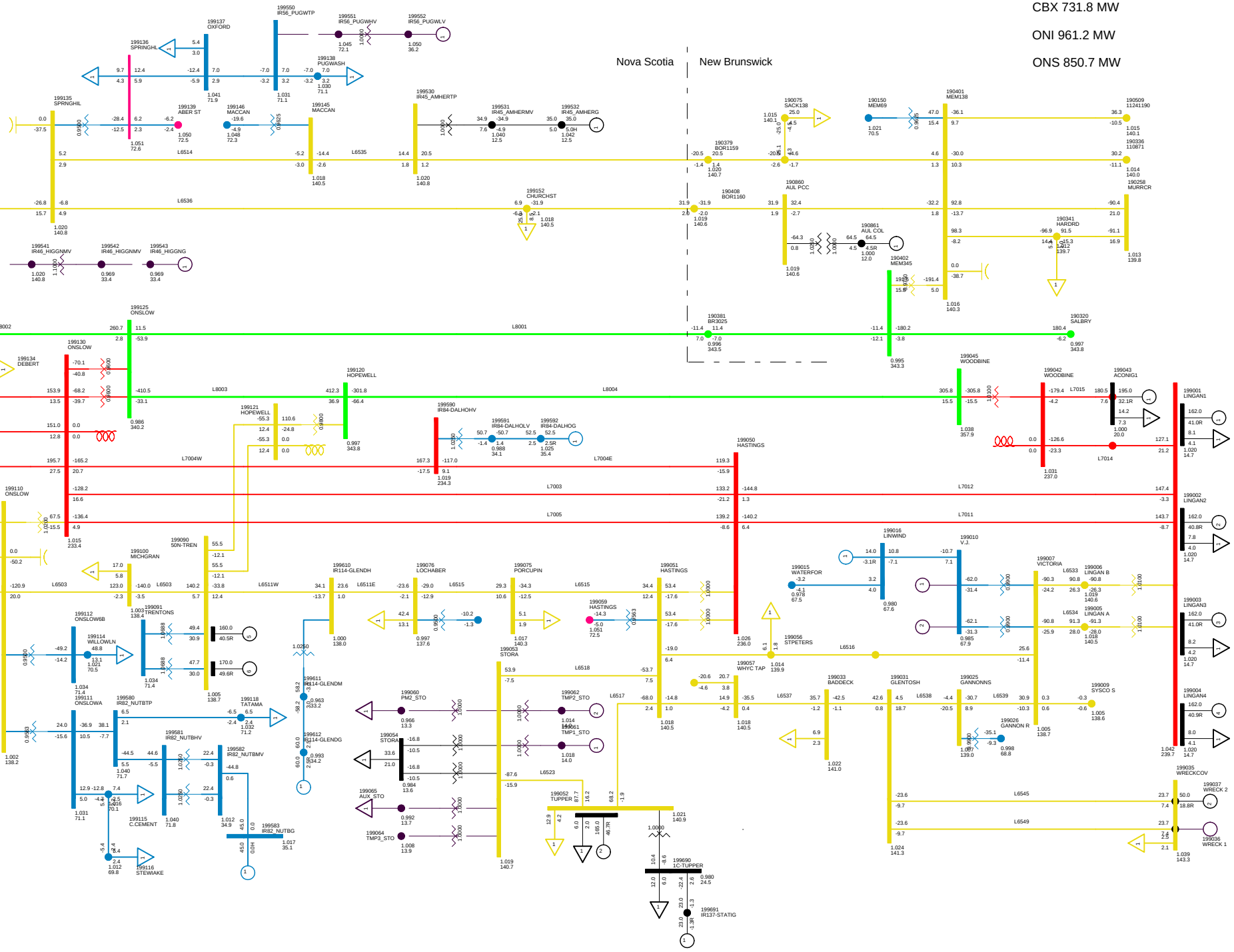

2013 WINTER PEAK STORA MIN
NS-NB=0; NB-NE=500; CBX=732; ONI=961 ONS=851
NORTHEASTERN NS SUN, FEB 15 2009 16:03

Total Wind Gen: 290.1 MW | Gross Tupper 165.0 MW | Gross Wreck Cove 50.0 MW | Net Stora Load 33.7 MW
Gross Lingan 648.0 MW | Gross Trenton 330.0 MW | Gross Gas Turbine 24.0 MW | Total BMPC Load 75.5 MW
Gross Pt Aconi 195.0 MW | Gross Tuft's Cove 390.8 MW | Gross Small Hydro 182.4 MW

Bus - VOLTAGE (KV/PU)
Branch - MW/MVAR
Equipment - MW/MVAR
110.0%RATEB
1.050OV 0.950UV
KV: <=25.000 <=69.000 <=138.000 <=230.000 <=345.000 >345.000

Figure ___

NSX -41.8 MW

CBX 710.2 MW

ONI 921.2 MW

ONS 852.4 MW

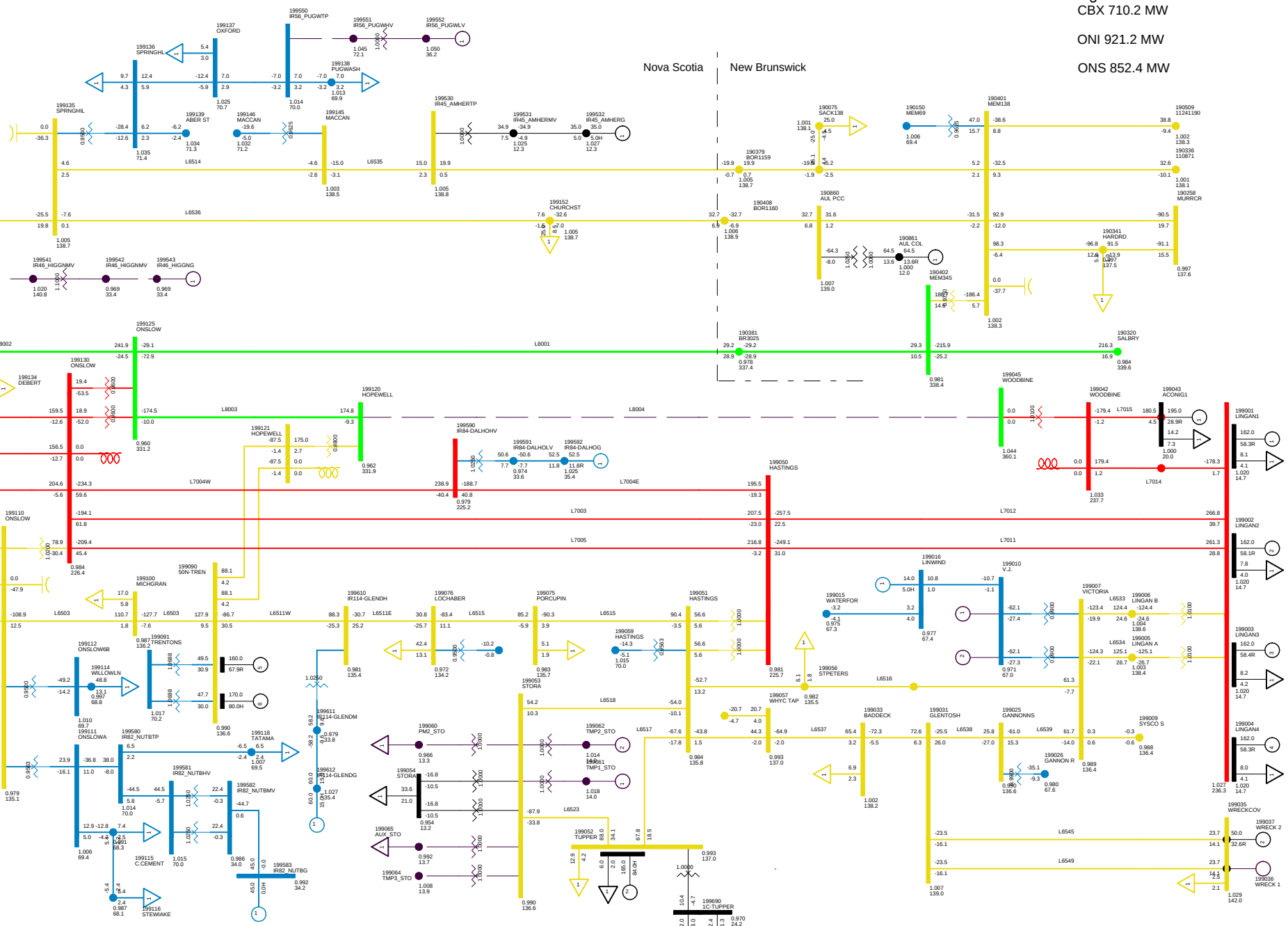

2013WP-NS-0
C01 LOSE L8004 NO SPS
NORTHEASTERN NS SUN, FEB 15 2009 16:03

Total Wind Gen: 290.1 MW | Gross Tupper 165.0 MW | Gross Wreck Cove 50.0 MW | Net Stora Load 33.7 MW
Gross Lingan 648.0 MW | Gross Trenton 330.0 MW | Gross Gas Turbine 24.0 MW | Total BMPC Load 75.5 MW
Gross Pt Aconi 195.0 MW | Gross Tuft's Cove 390.8 MW | Gross Small Hydro 182.4 MW

Bus - VOLTAGE (KV/PU)
Branch - MW/MVAR
Equipment - MW/MVAR
110.0%RATEB
1.050OV 0.950UV
KV: <=25.000 <=69.000 <=138.000 <=230.000 <=345.000 >345.000

Figure ___

NSX -164.5 MW
CBX 572.4 MW
ONI 797.4 MW
ONS 851.6 MW

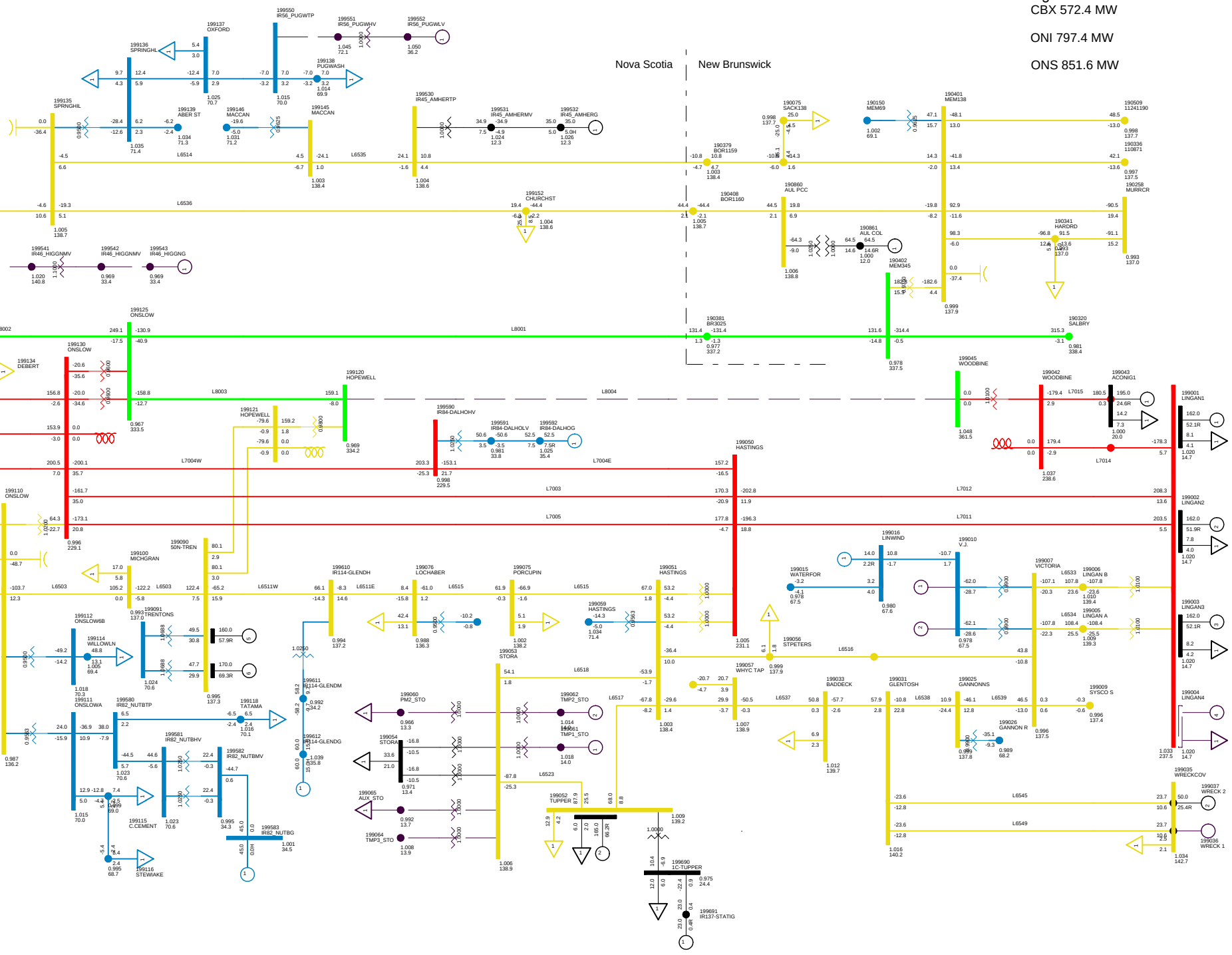

2013WP-NS-0
C01S LOSE L8004 WITH 1 UNIT SPS
NORTHEASTERN NS SUN, FEB 15 2009 16:03

Total Wind Gen: 290.1 MW | Gross Tupper 165.0 MW | Gross Wreck Cove 50.0 MW | Net Stora Load 33.7 MW
Gross Lingan 486.0 MW | Gross Trenton 330.0 MW | Gross Gas Turbine 24.0 MW | Total BMPC Load 75.5 MW
Gross Pt Aconi 195.0 MW | Gross Tuft's Cove 390.8 MW | Gross Small Hydro 182.4 MW

Bus - VOLTAGE (KV/PU)
Branch - MW/MVAR
Equipment - MW/MVAR
110.0%RATEB
1.050OV 0.950UV
KV: <=25.000 <=69.000 <=138.000 <=230.000 <=345.000 >345.000

Figure ___

NSX -296.1 MW

CBX 430.4 MW

ONI 665.7 MW

ONS 851.4 MW

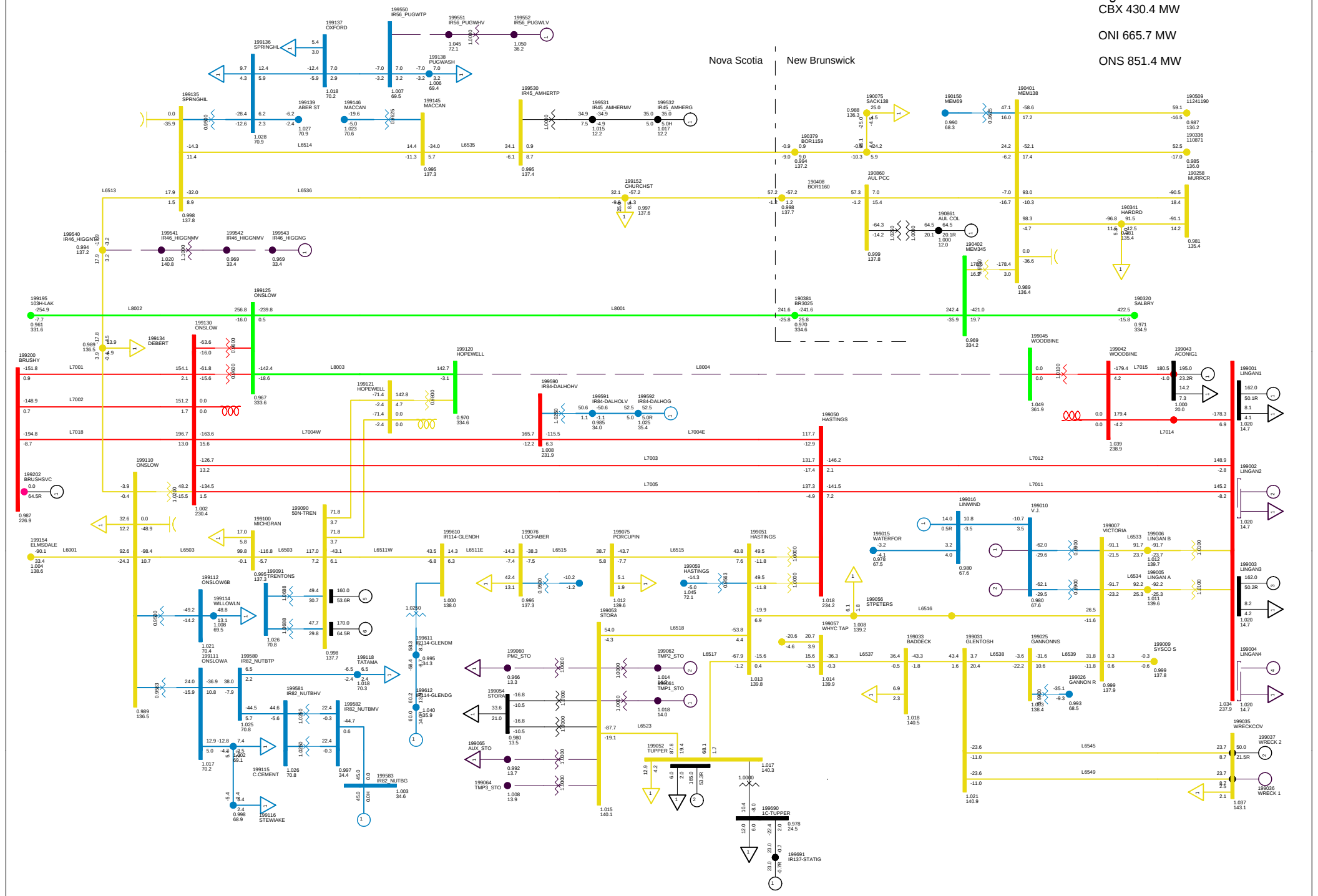

2013WP-NS-0
C01SS LOSE L8004 WITH 2 UNIT SPS
NORTHEASTERN NS SUN, FEB 15 2009 16:03

Total Wind Gen: 290.1 MW | Gross Tupper 165.0 MW | Gross Wreck Cove 50.0 MW | Net Stora Load 33.7 MW
Gross Lingan 324.0 MW | Gross Trenton 330.0 MW | Gross Gas Turbine 24.0 MW | Total BMPC Load 75.5 MW
Gross Pt Aconi 195.0 MW | Gross Tuft's Cove 390.8 MW | Gross Small Hydro 182.4 MW

Bus - VOLTAGE (KV/PU)
Branch - MW/MVAR
Equipment - MW/MVAR
110.0%RATEB
1.050UV 0.950UV
KV: <=25.000 <=69.000 <=138.000 <=230.000 <=345.000 >345.000

Figure ___

NSX -43.9 MW

CBX 720.2 MW

ONI 921.9 MW

ONS 854.4 MW

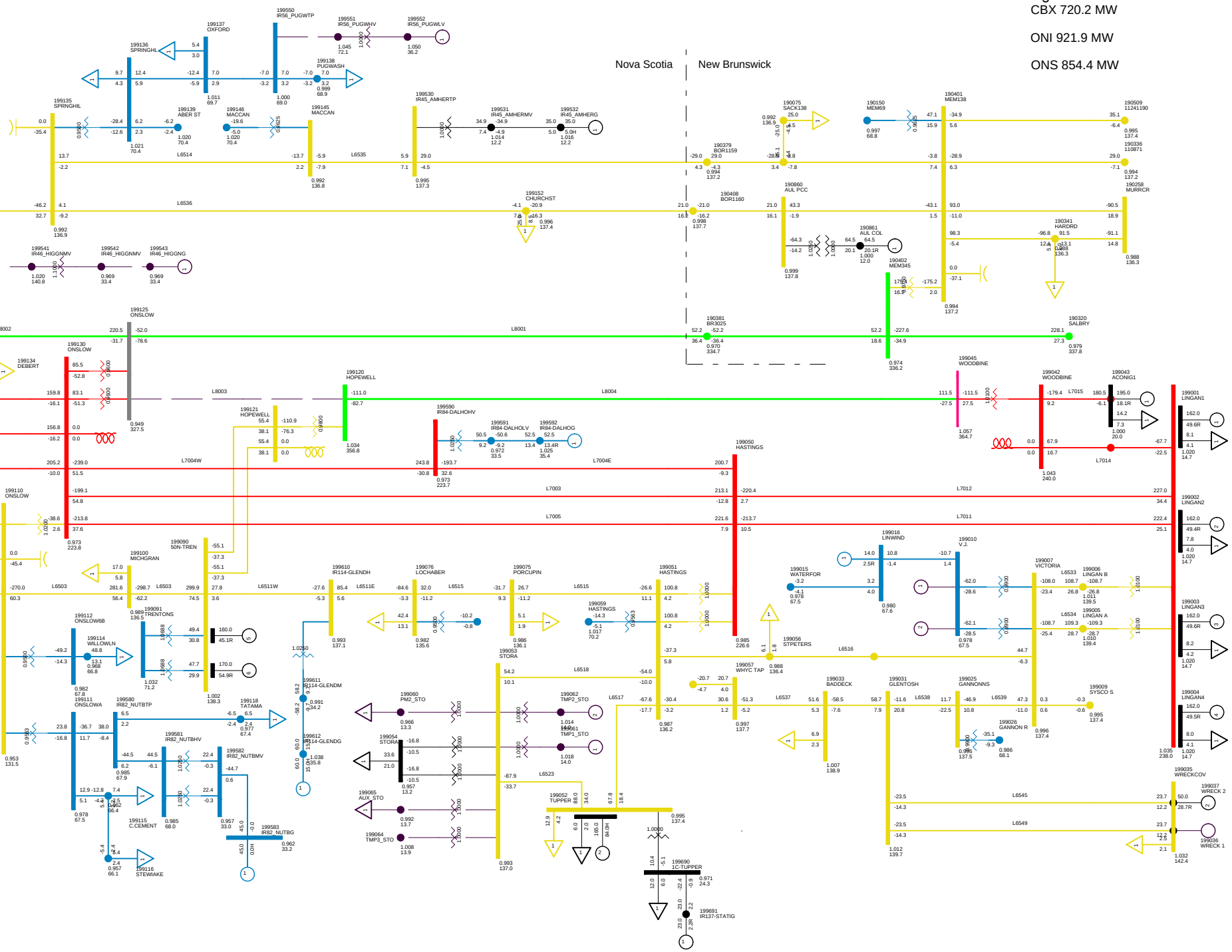

2013WP-NS-0
C02 LOSE L8003 NO SPS
NORTHEASTERN NS SUN, FEB 15 2009 16:03

Total Wind Gen: 290.1 MW | Gross Tupper 165.0 MW | Gross Wreck Cove 50.0 MW | Net Stora Load 33.7 MW
Gross Lingan 648.0 MW | Gross Trenton 330.0 MW | Gross Gas Turbine 24.0 MW | Total BMPC Load 75.5 MW
Gross Pt Aconi 195.0 MW | Gross Tuft's Cove 390.8 MW | Gross Small Hydro 182.4 MW

Bus - VOLTAGE (KV/PU)
Branch - MW/MVAR
Equipment - MW/MVAR
110.0%RATEB
1.050pu/V 0.950pu/V
KV: <=25.000 <=69.000 <=138.000 <=230.000 <=345.000 >345.000

Figure ___

NSX -169.3 MW

CBX 577.9 MW

ONI 794.5 MW

ONS 853.3 MW

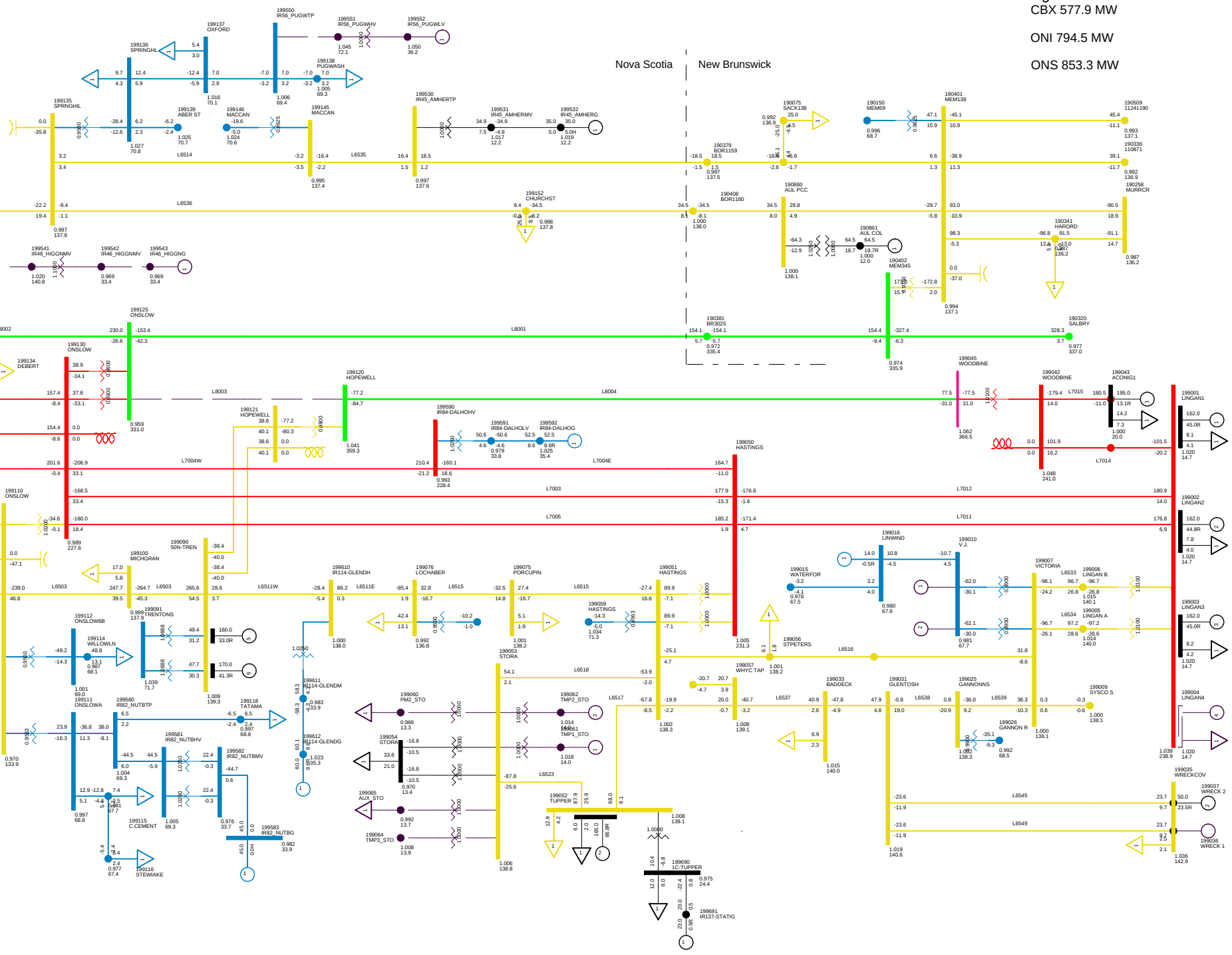

2013WP-NS-0
C02S LOSE L8003 WITH 1-UNIT SPS
NORTHEASTERN NS SUN, FEB 15 2009 16:03

Total Wind Gen: 290.1 MW | Gross Tupper 165.0 MW | Gross Wreck Cove 50.0 MW | Net Stora Load 33.7 MW
Gross Lingan 486.0 MW | Gross Trenton 330.0 MW | Gross Gas Turbine 24.0 MW | Total BMPC Load 75.5 MW
Gross Pt Aconi 195.0 MW | Gross Tuft's Cove 390.8 MW | Gross Small Hydro 182.4 MW

Bus - VOLTAGE (KV/PU)
Branch - MW/MVAR
Equipment - MW/MVAR
110.0%RATEB
1.0500V 0.950UV
KV: <=25.000 <=69.000 <=138.000 <=230.000 <=345.000 >345.000

Figure ___

NSX -302.3 MW

CBX 432.8 MW

ONI 660.6 MW

ONS 852.7 MW

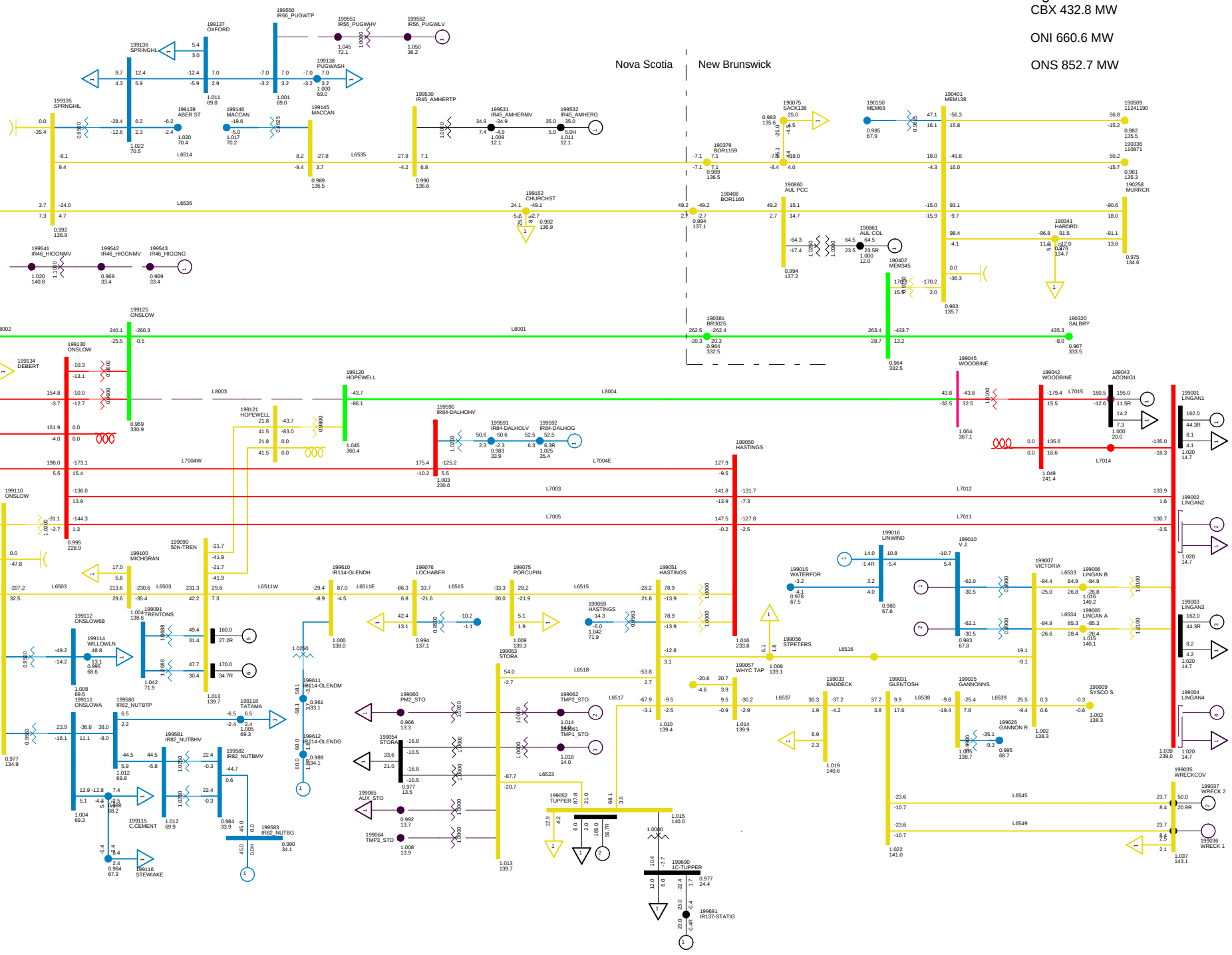

2013WP-NS-0
C02SS LOSE L8003 WITH 2-UNIT SPS
NORTHEASTERN NS SUN, FEB 15 2009 16:04

Total Wind Gen: 290.1 MW | Gross Tupper 165.0 MW | Gross Wreck Cove 50.0 MW | Net Stora Load 33.7 MW
Gross Lingan 324.0 MW | Gross Trenton 330.0 MW | Gross Gas Turbine 24.0 MW | Total BMPC Load 75.5 MW
Gross Pt Aconi 195.0 MW | Gross Tuft's Cove 390.8 MW | Gross Small Hydro 182.4 MW

Bus - VOLTAGE (KV/PU)
Branch - MW/MVAR
Equipment - MW/MVAR
110.0%RATEB
1.050UV 0.950UV
KV: <=25.000 <=69.000 <=138.000 <=230.000 <=345.000 >345.000

Figure ___

NSX -13.6 MW

CBX 731.3 MW

ONI 959.8 MW

ONS 862.8 MW

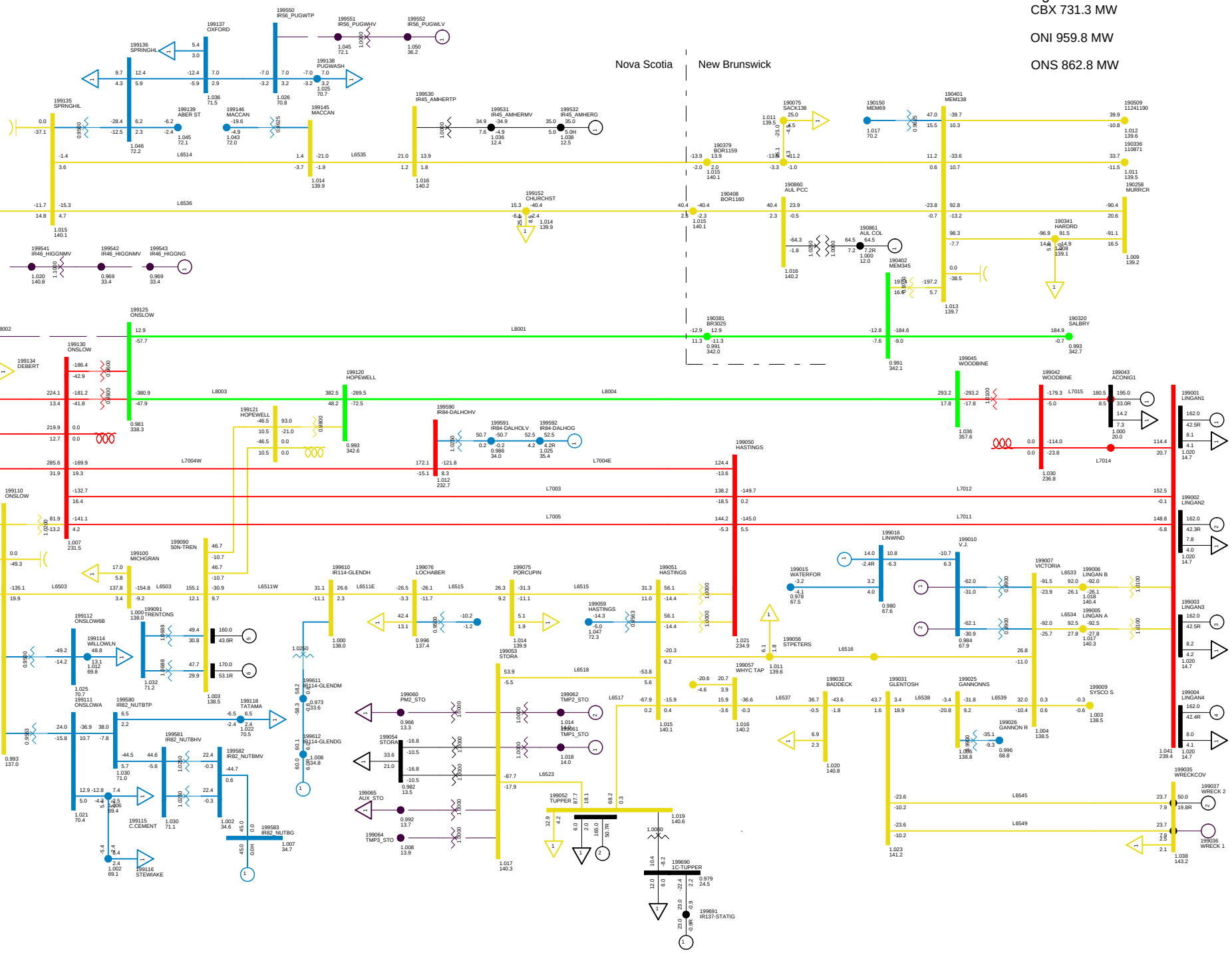

2013WP-NS-0
C03 LOSE L8002
NORTHEASTERN NS SUN, FEB 15 2009 16:04

Total Wind Gen: 290.1 MW | Gross Tupper 165.0 MW | Gross Wreck Cove 50.0 MW | Net Stora Load 33.7 MW
Gross Lingan 648.0 MW | Gross Trenton 330.0 MW | Gross Gas Turbine 24.0 MW | Total BMPC Load 75.5 MW
Gross Pt Aconi 195.0 MW | Gross Tuft's Cove 390.8 MW | Gross Small Hydro 182.4 MW

Bus - VOLTAGE (KV/PU)
Branch - MW/MVAR
Equipment - MW/MVAR
110.0%RATEB
1.050OV 0.950UV
KV: <=25.000 <=69.000 <=138.000 <=230.000 <=345.000 >345.000

Figure ___

NSX -0.7 MW

CBX 731.7 MW

ONI 960.8 MW

ONS 850.8 MW

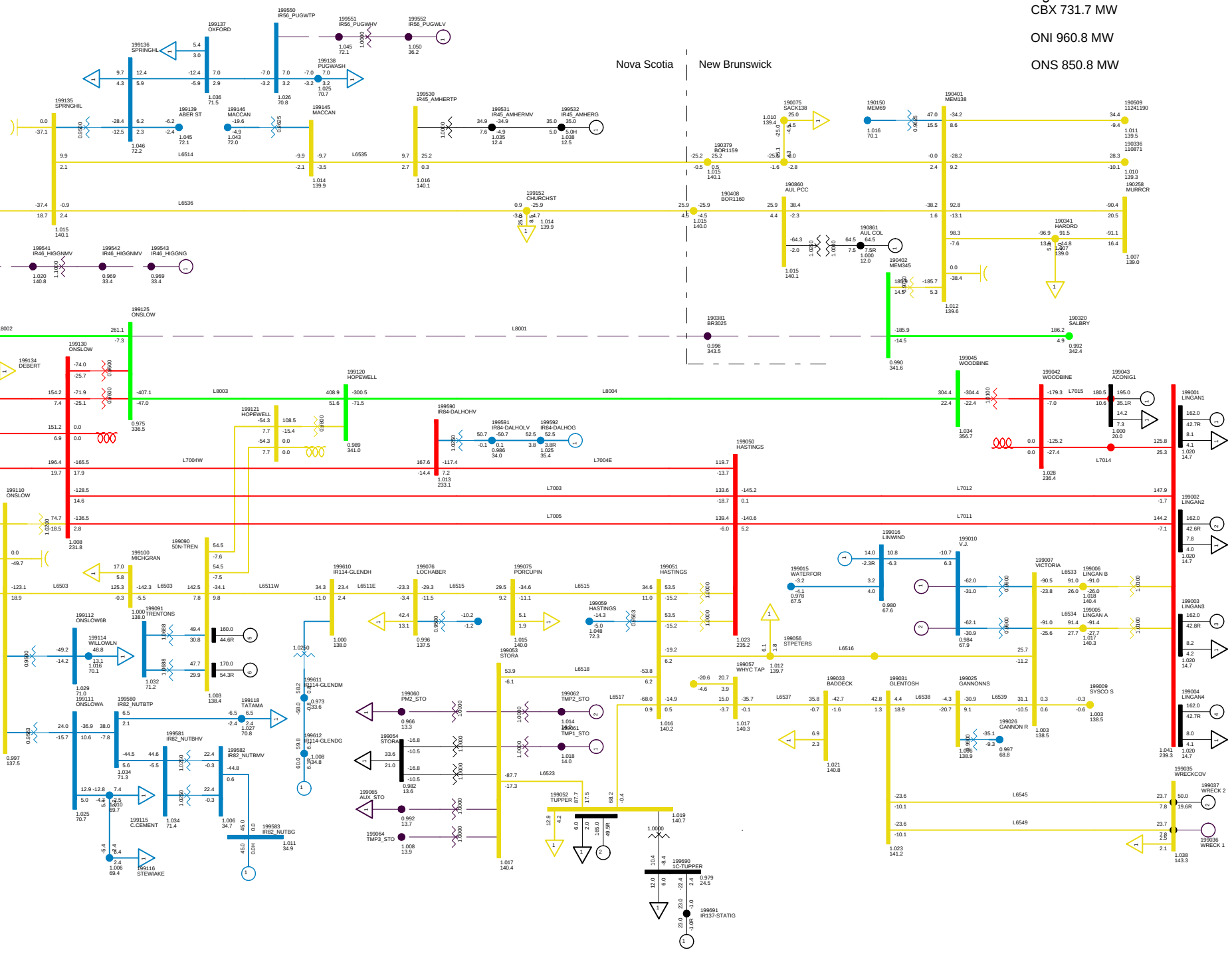

2013WP-NS-0
C04 LOSE L8001 NO SPS
NORTHEASTERN NS SUN, FEB 15 2009 16:04

Total Wind Gen: 290.1 MW | Gross Tupper 165.0 MW | Gross Wreck Cove 50.0 MW | Net Stora Load 33.7 MW
Gross Lingan 648.0 MW | Gross Trenton 330.0 MW | Gross Gas Turbine 24.0 MW | Total BMPC Load 75.5 MW
Gross Pt Aconi 195.0 MW | Gross Tuft's Cove 390.8 MW | Gross Small Hydro 182.4 MW

Bus - VOLTAGE (KV/PU)
Branch - MW/MVAR
Equipment - MW/MVAR
110.0%RATEB
1.050OV 0.950UV
KV: <=25.000 <=69.000 <=138.000 <=230.000 <=345.000 >345.000

Figure ___

NSX -145.0 MW

CBX 585.4 MW

ONI 821.3 MW

ONS 851.5 MW

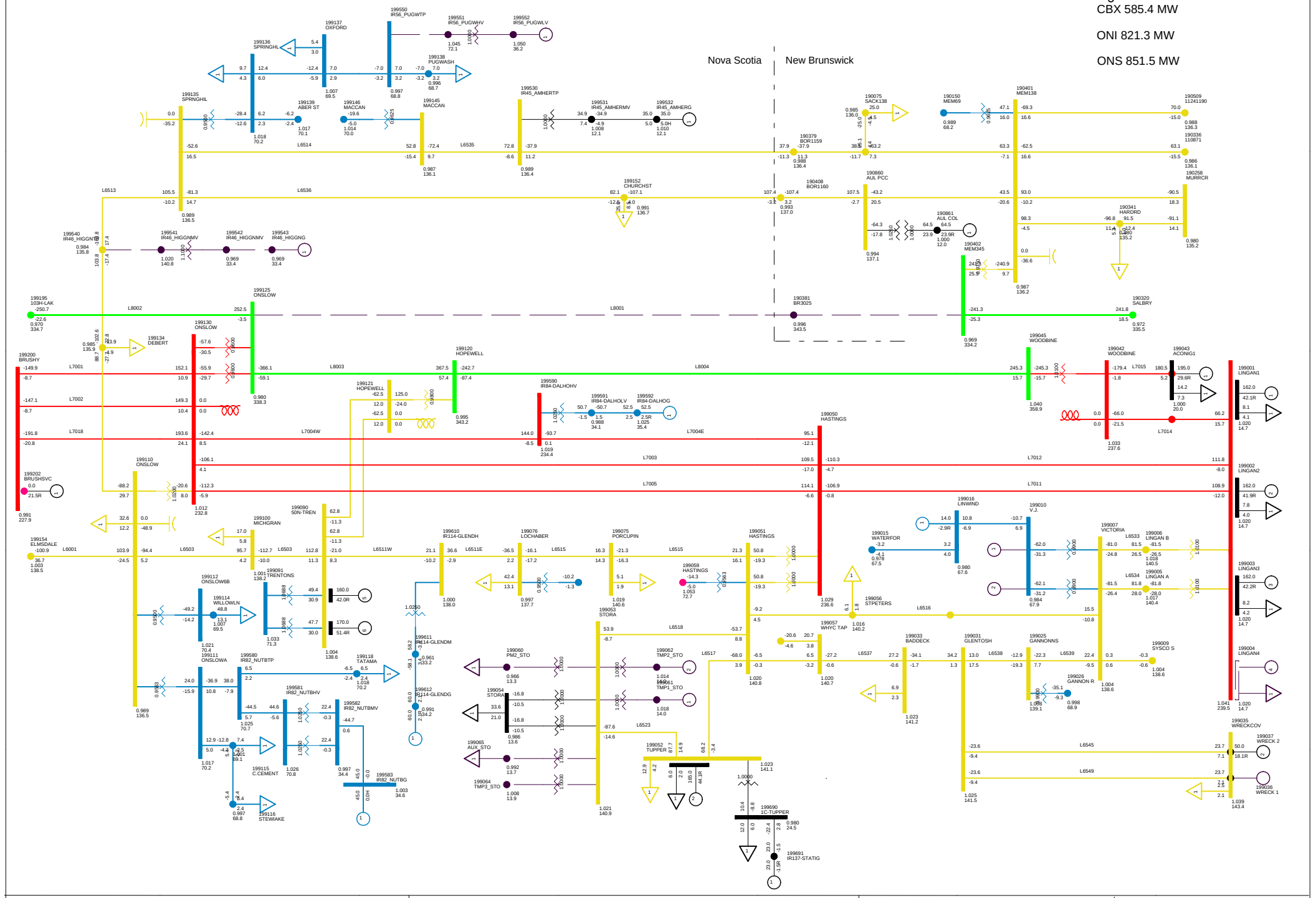

2013WP-NS-0
C04S LOSE L8001 SPS TRIPS 1 LINGAN UNIT
NORTHEASTERN NS SUN, FEB 15 2009 16:04

Total Wind Gen: 290.1 MW | Gross Tupper 165.0 MW | Gross Wreck Cove 50.0 MW | Net Stora Load 33.7 MW
Gross Lingan 486.0 MW | Gross Trenton 330.0 MW | Gross Gas Turbine 24.0 MW | Total BMPC Load 75.5 MW
Gross Pt Aconi 195.0 MW | Gross Tuft's Cove 390.8 MW | Gross Small Hydro 182.4 MW

Bus - VOLTAGE (KV/PU)
Branch - MW/MVAR
Equipment - MW/MVAR
110.0%RATEB
1.050OV 0.950UV
KV: <=25.000 <=69.000 <=138.000 <=230.000 <=345.000 >345.000

Figure ___

NSX 0.1 MW

CBX 731.8 MW

ONI 961.2 MW

ONS 850.7 MW

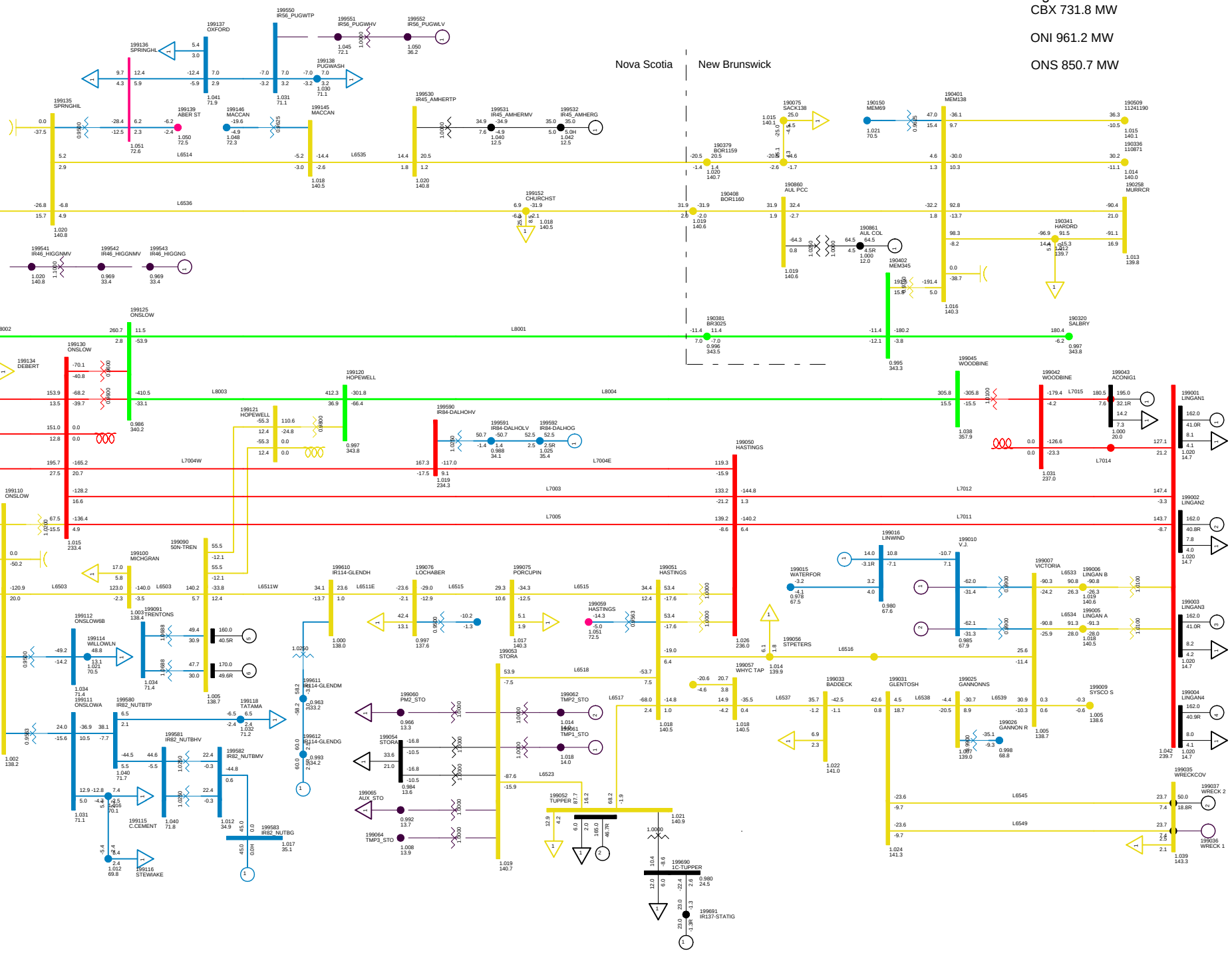

2013 WINTER PEAK STORA MIN
NS-NB=0; NB-NE=500; CBX=732; ONI=961 ONS=851
NORTHEASTERN NS SUN, FEB 15 2009 16:04

Total Wind Gen: 290.1 MW | Gross Tupper 165.0 MW | Gross Wreck Cove 50.0 MW | Net Stora Load 33.7 MW
Gross Lingan 648.0 MW | Gross Trenton 330.0 MW | Gross Gas Turbine 24.0 MW | Total BMPC Load 75.5 MW
Gross Pt Aconi 195.0 MW | Gross Tuft's Cove 390.8 MW | Gross Small Hydro 182.4 MW

Bus - VOLTAGE (KV/PU)
Branch - MW/MVAR
Equipment - MW/MVAR
110.0%RATEB
1.050OV 0.950UV
KV: <=25.000 <=69.000 <=138.000 <=230.000 <=345.000 >345.000

Figure ___

NSX -3.3 MW

CBX 727.6 MW

ONI 957.8 MW

ONS 850.7 MW

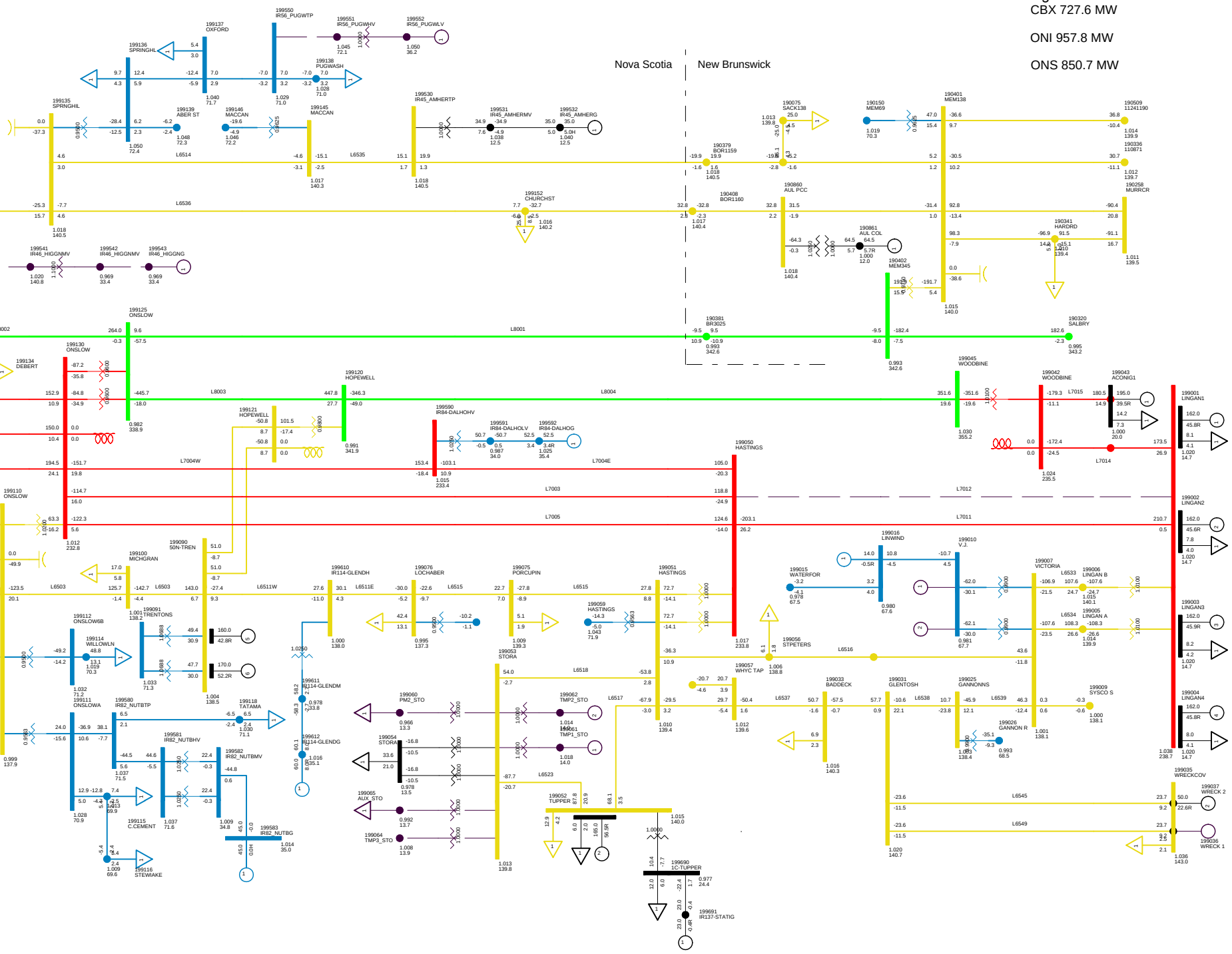

2013WP-NS-0
C05 LOSE L7012 NO SPS
NORTHEASTERN NS SUN, FEB 15 2009 16:04

Total Wind Gen: 290.1 MW | Gross Tupper 165.0 MW | Gross Wreck Cove 50.0 MW | Net Stora Load 33.7 MW
Gross Lingan 648.0 MW | Gross Trenton 330.0 MW | Gross Gas Turbine 24.0 MW | Total BMPC Load 75.5 MW
Gross Pt Aconi 195.0 MW | Gross Tuft's Cove 390.8 MW | Gross Small Hydro 182.4 MW

Bus - VOLTAGE (KV/PU)
Branch - MW/MVAR
Equipment - MW/MVAR
110.0%RATEB
1.050OV 0.950UV
KV: <=25.000 <=69.000 <=138.000 <=230.000 <=345.000 >345.000

Figure ___

NSX -141.4 MW

CBX 583.1 MW

ONI 819.4 MW

ONS 850.6 MW

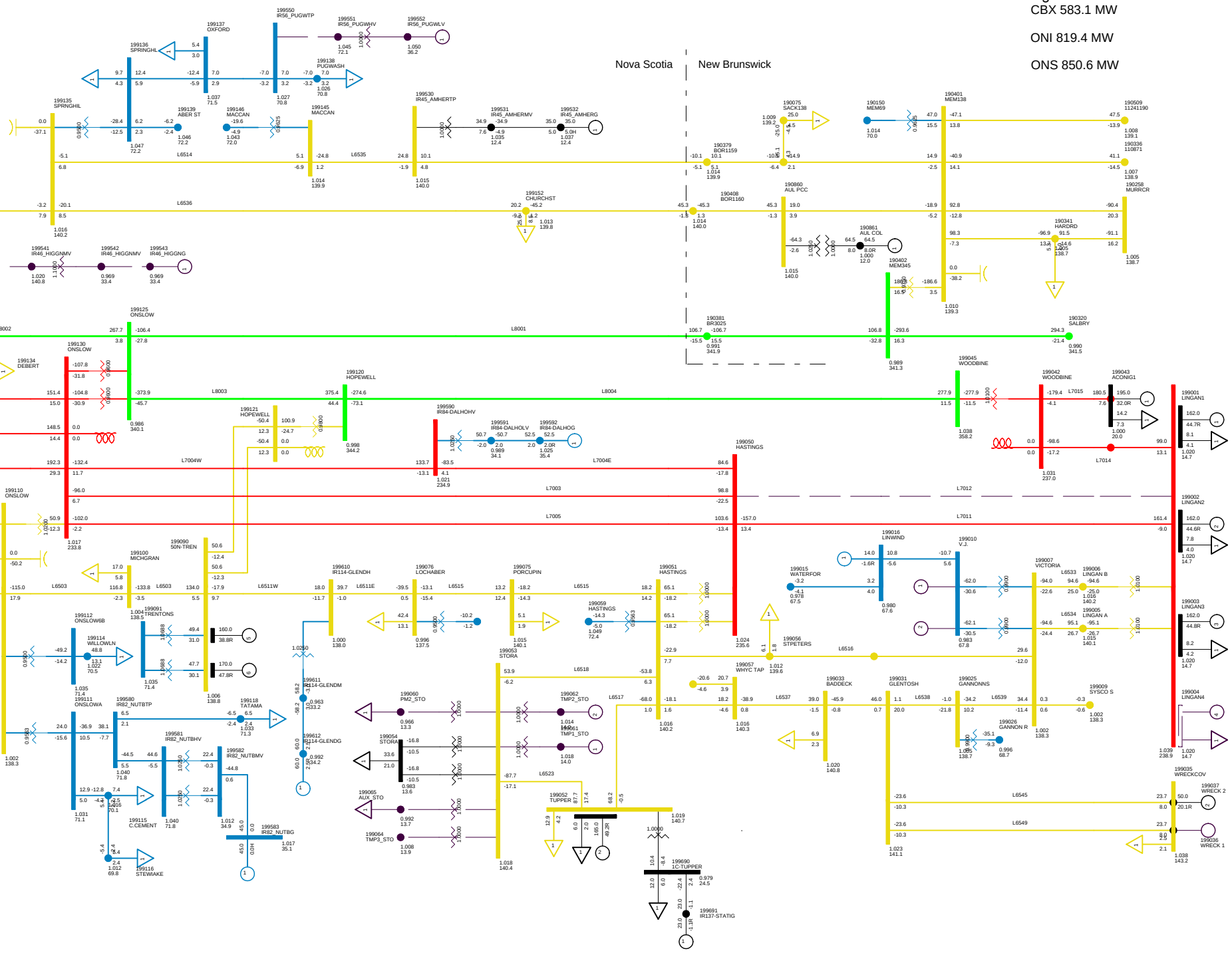

2013WP-NS-0
C05S LOSE L7012 WITH SPS
NORTHEASTERN NS SUN, FEB 15 2009 16:04

Total Wind Gen: 290.1 MW | Gross Tupper 165.0 MW | Gross Wreck Cove 50.0 MW | Net Stora Load 33.7 MW
Gross Lingan 486.0 MW | Gross Trenton 330.0 MW | Gross Gas Turbine 24.0 MW | Total BMPC Load 75.5 MW
Gross Pt Aconi 195.0 MW | Gross Tuft's Cove 390.8 MW | Gross Small Hydro 182.4 MW

Bus - VOLTAGE (KV/PU)
Branch - MW/MVAR
Equipment - MW/MVAR
110.0%RATEB
1.050OV 0.950UV
KV: <=25.000 <=69.000 <=138.000 <=230.000 <=345.000 >345.000

Figure ___

NSX -1.4 MW

CBX 729.7 MW

ONI 959.8 MW

ONS 850.7 MW

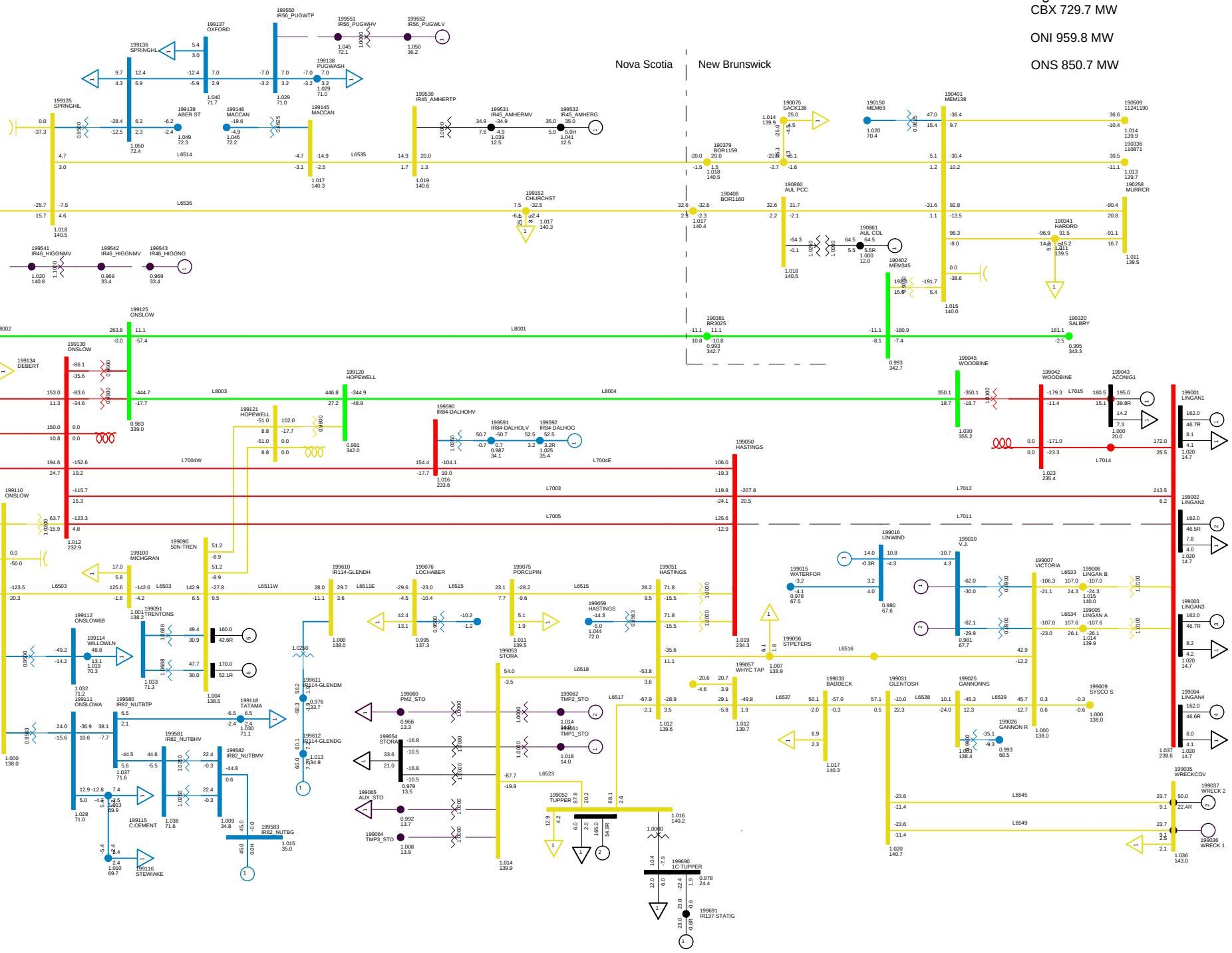

2013WP-NS-0
C06 LOSE L7011
NORTHEASTERN NS SUN, FEB 15 2009 16:04

Total Wind Gen: 290.1 MW | Gross Tupper 165.0 MW | Gross Wreck Cove 50.0 MW | Net Stora Load 33.7 MW
Gross Lingan 648.0 MW | Gross Trenton 330.0 MW | Gross Gas Turbine 24.0 MW | Total BMPC Load 75.5 MW
Gross Pt Aconi 195.0 MW | Gross Tuft's Cove 390.8 MW | Gross Small Hydro 182.4 MW

Bus - VOLTAGE (KV/PU)
Branch - MW/MVAR
Equipment - MW/MVAR
110.0%RATEB
1.0500V 0.950UV
KV: <=25.000 <=69.000 <=138.000 <=230.000 <=345.000 >345.000

Figure ___

NSX -6.1 MW

CBX 732.7 MW

ONI 955.2 MW

ONS 850.8 MW

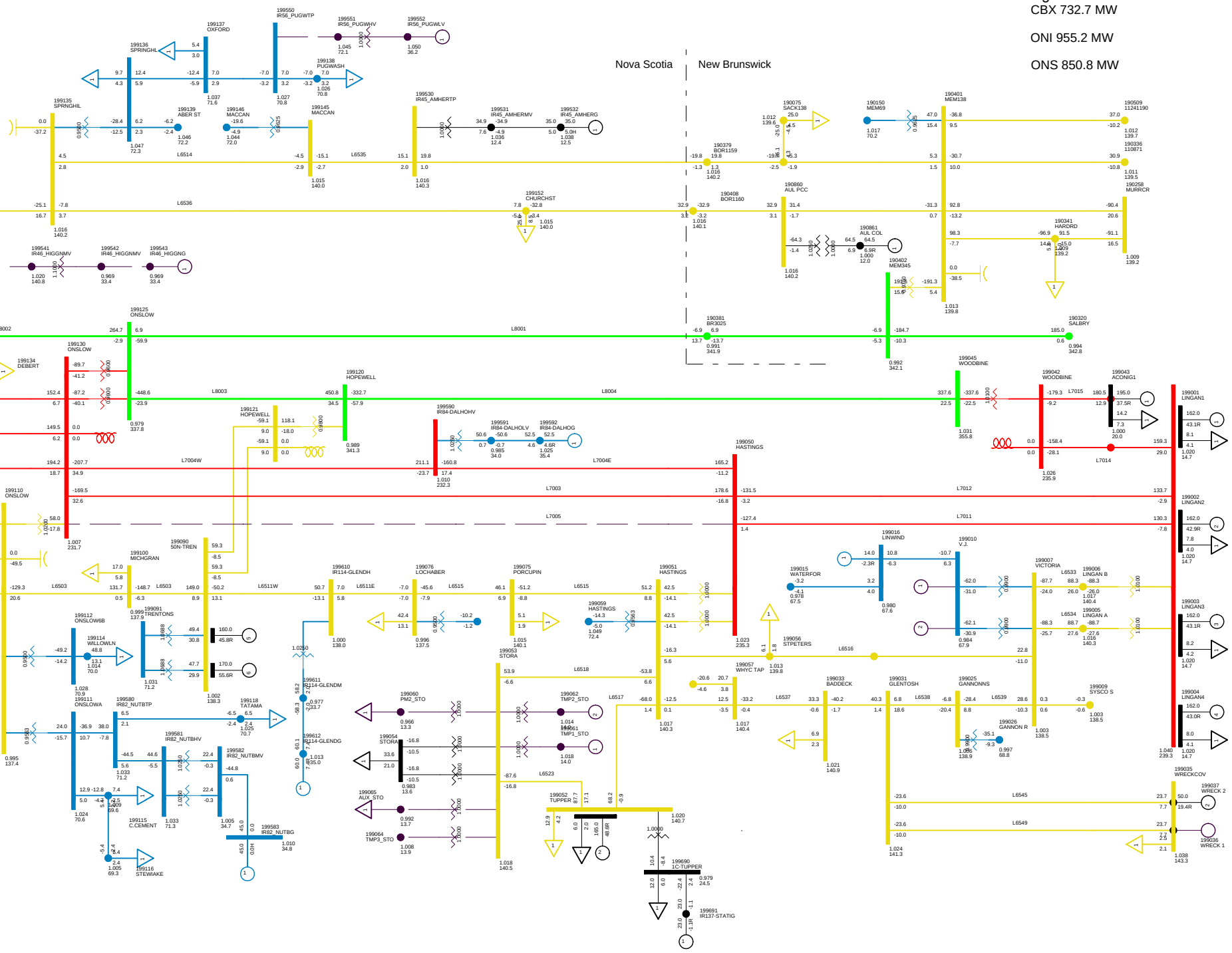

2013WP-NS-0
C07 LOSE L7005
NORTHEASTERN NS SUN, FEB 15 2009 16:04

Total Wind Gen: 290.1 MW | Gross Tupper 165.0 MW | Gross Wreck Cove 50.0 MW | Net Stora Load 33.7 MW
Gross Lingan 648.0 MW | Gross Trenton 330.0 MW | Gross Gas Turbine 24.0 MW | Total BMPC Load 75.5 MW
Gross Pt Aconi 195.0 MW | Gross Tuft's Cove 390.8 MW | Gross Small Hydro 182.4 MW

Bus - VOLTAGE (KV/PU)
Branch - MW/MVAR
Equipment - MW/MVAR
110.0%RATEB
1.050pu/V 0.950pu/V
KV: <=25.000 <=69.000 <=138.000 <=230.000 <=345.000 >345.000

Figure ___

NSX -4.8 MW

CBX 731.9 MW

ONI 961.3 MW

ONS 855.7 MW

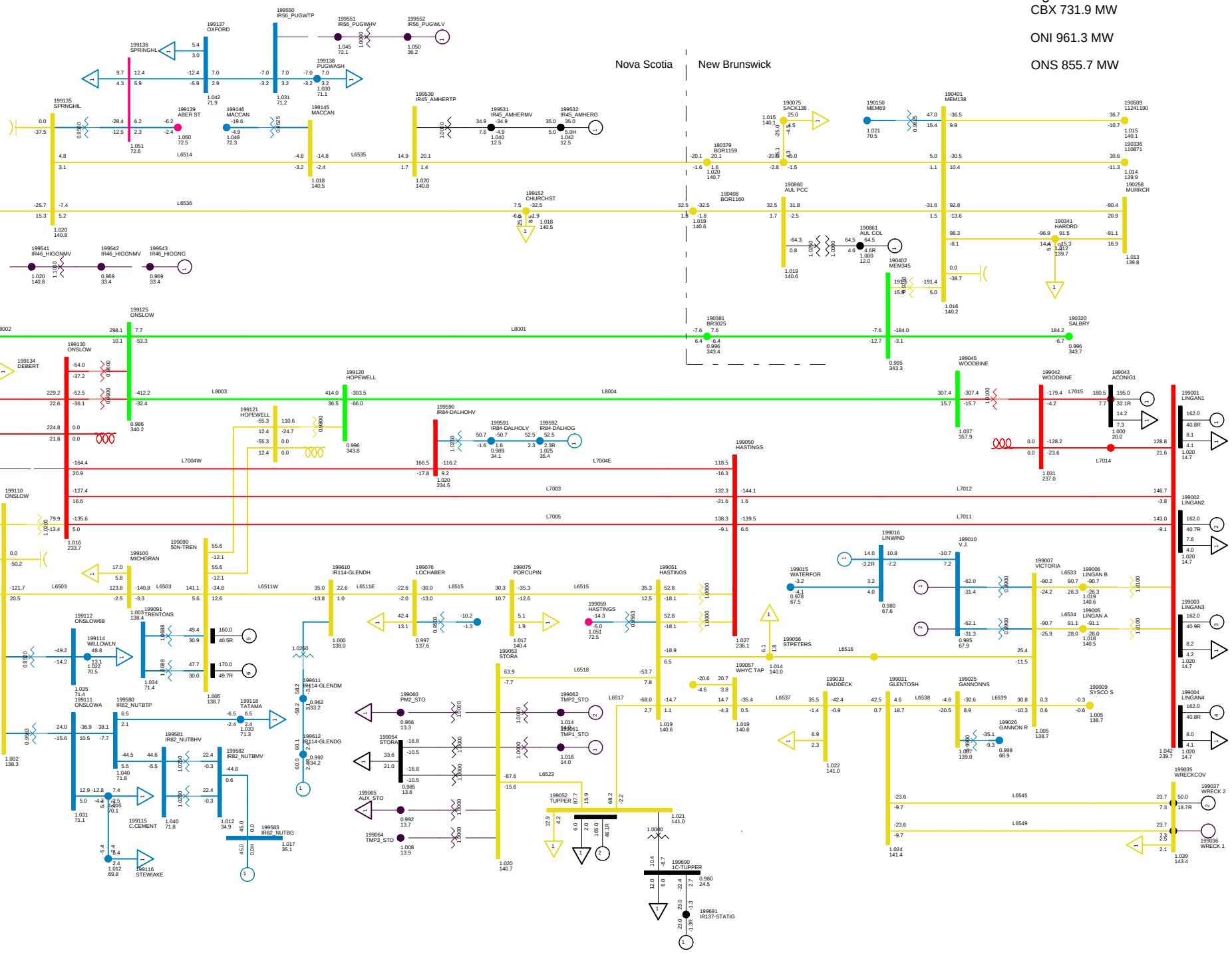

2013WP-NS-0
C08 LOSE L7018
NORTHEASTERN NS SUN, FEB 15 2009 16:04

Total Wind Gen: 290.1 MW | Gross Tupper 165.0 MW | Gross Wreck Cove 50.0 MW | Net Stora Load 33.7 MW
Gross Lingan 648.0 MW | Gross Trenton 330.0 MW | Gross Gas Turbine 24.0 MW | Total BMPC Load 75.5 MW
Gross Pt Aconi 195.0 MW | Gross Tuft's Cove 390.8 MW | Gross Small Hydro 182.4 MW

Bus - VOLTAGE (KV/PU)
Branch - MW/MVAR
Equipment - MW/MVAR
110.0%RATEB
1.050OV 0.950UV
KV: <=25.000 <=69.000 <=138.000 <=230.000 <=345.000 >345.000

Figure ___

Total Wind Gen: 290.1 MW | Gross Tupper 165.0 MW | Gross Wreck Cove 50.0 MW

Gross Lingan 648.0 MW | Gross Trenton 330.0 MW | Gross Gas Turbine 24.0 MW

Gross Pt Aconi 195.0 MW | Gross Tuft's Cove 390.8 MW | Gross Small Hydro 182.4 MW

Net Stora Load 33.7 MW | Total BMPC Load 75.5 MW

NSX -1.4 MW

CBX 731.8 MW

ONI 961.2 MW

ONS 852.1 MW

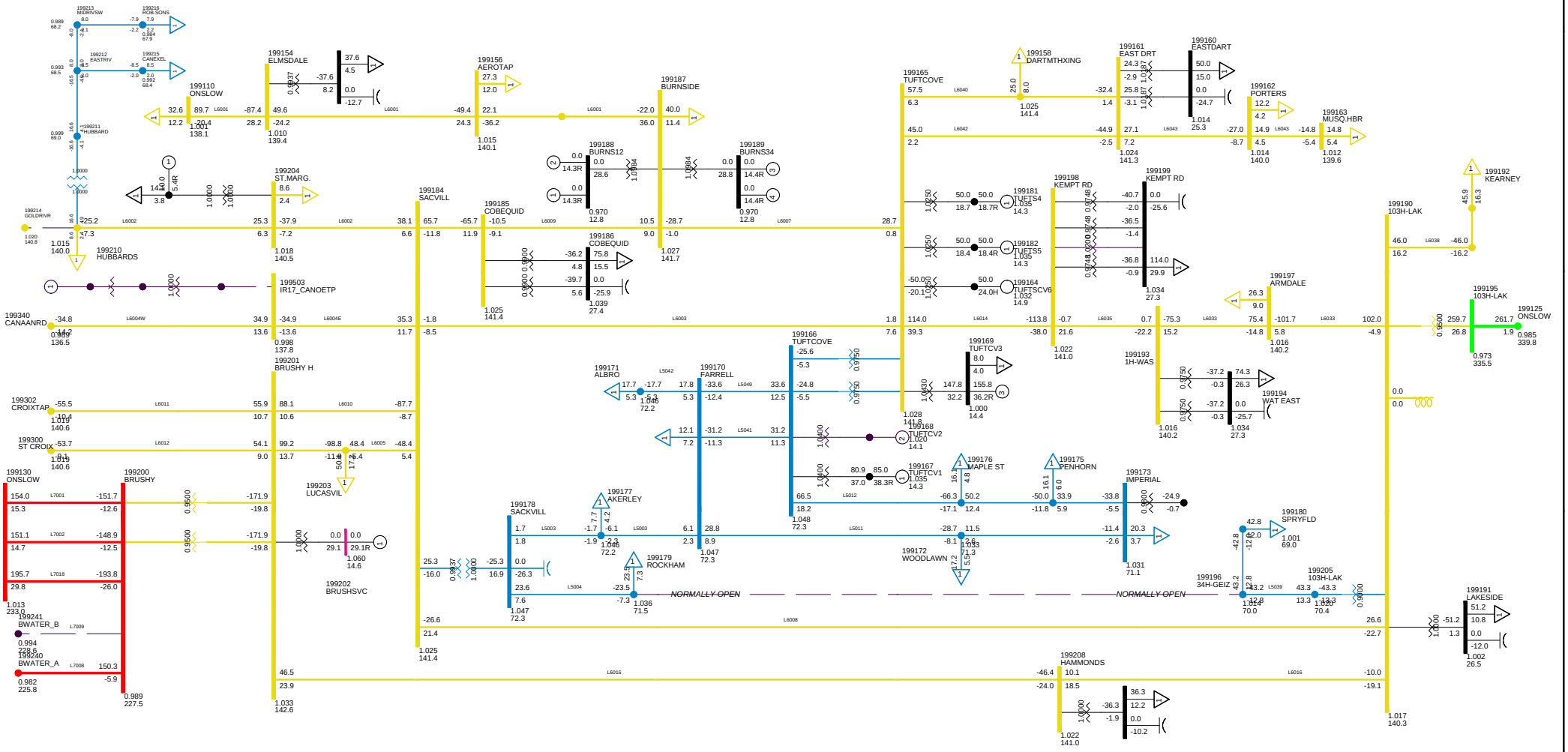

2013WP-NS-0
C09 LOSE L7009
METRO ZONE SUN, FEB 15 2009 16:04

Bus - VOLTAGE (KV/PU)
Branch - MW/MVAR
Equipment - MW/MVAR
100.0%RATE8
1.050OV 0.950UV
KV: <=30.000 <=69.000 <=138.000 <=230.000 <=345.000 >345.000

Figure __

NSX -5.6 MW
CBX 732.8 MW
ONI 955.6 MW
ONS 850.8 MW

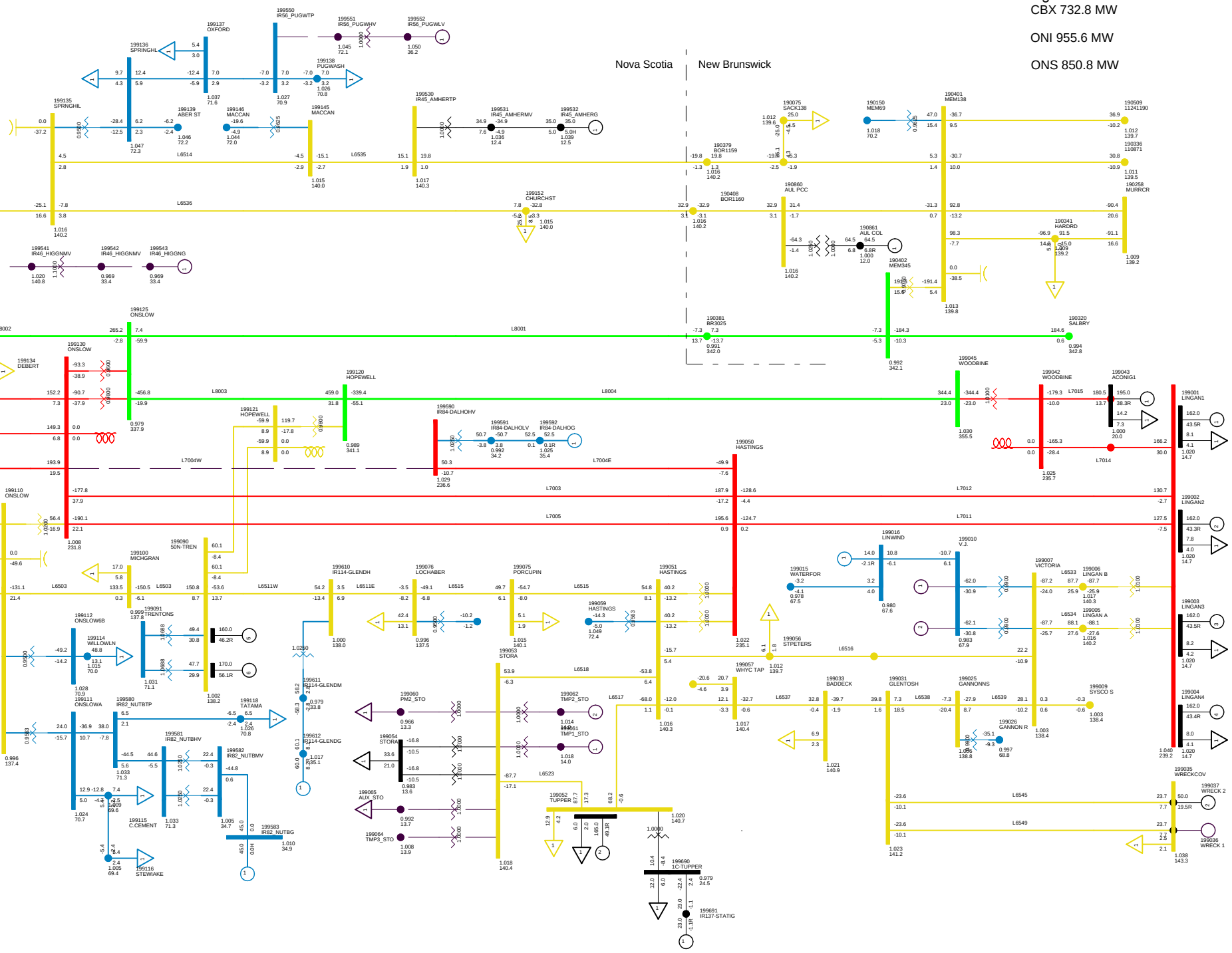

2013WP-NS-0
C10 LOSE L7004 WEST
NORTHEASTERN NS SUN, FEB 15 2009 16:05

Total Wind Gen: 290.1 MW | Gross Tupper 165.0 MW | Gross Wreck Cove 50.0 MW | Net Stora Load 33.7 MW
Gross Lingan 648.0 MW | Gross Trenton 330.0 MW | Gross Gas Turbine 24.0 MW | Total BMPC Load 75.5 MW
Gross Pt Aconi 195.0 MW | Gross Tuft's Cove 390.8 MW | Gross Small Hydro 182.4 MW

Bus - VOLTAGE (KV/PU)
Branch - MW/MVAR
Equipment - MW/MVAR
110.0%RATEB
1.050OV 0.950UV
KV: <=25.000 <=69.000 <=138.000 <=230.000 <=345.000 >345.000

Figure ___

NSX -10.4 MW

CBX 725.9 MW

ONI 950.8 MW

ONS 850.8 MW

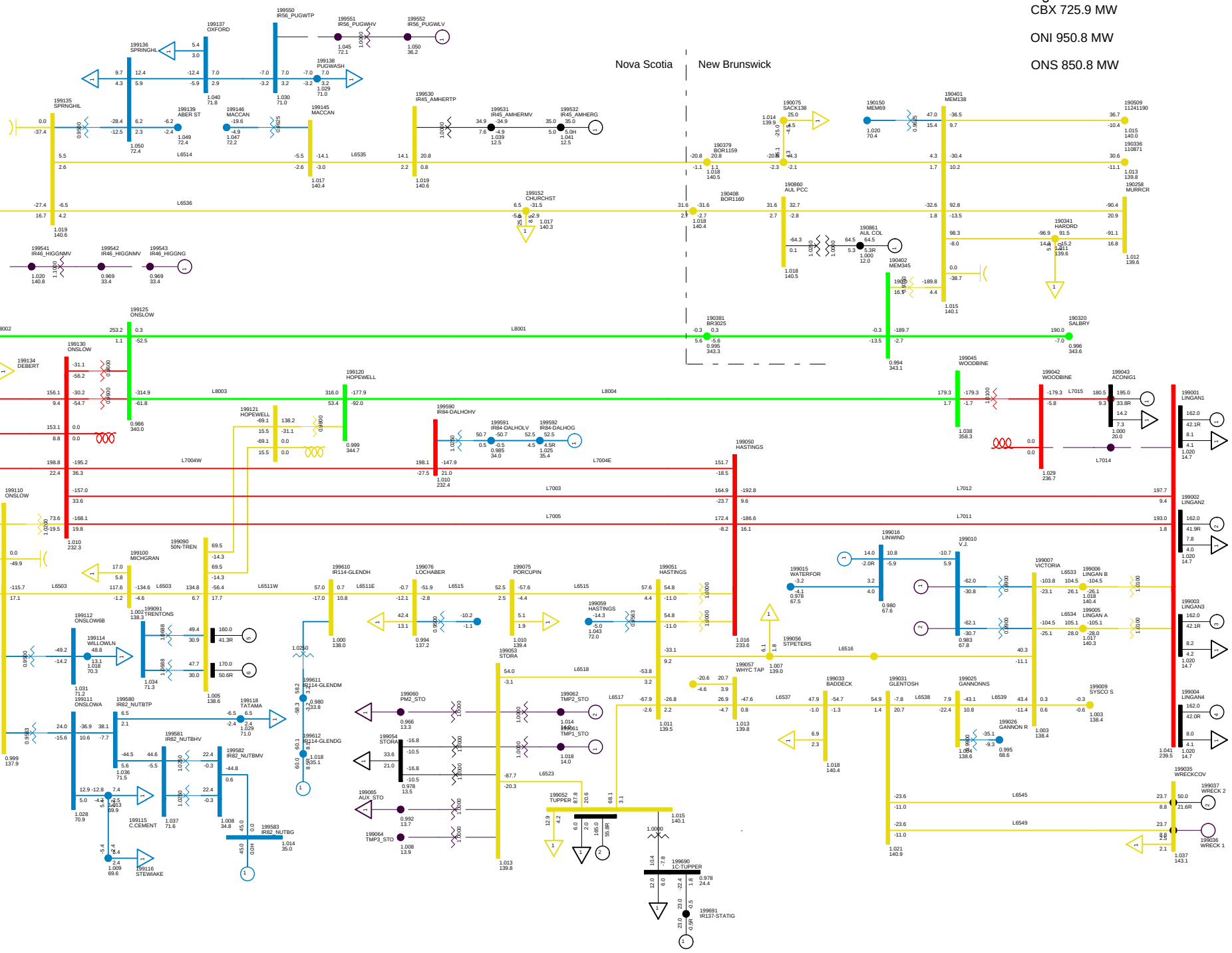

2013WP-NS-0
C11 LOSE L7014
NORTHEASTERN NS SUN, FEB 15 2009 16:05

Total Wind Gen: 290.1 MW
Gross Lingan 648.0 MW
Gross Pt Aconi 195.0 MW
Gross Tupper 165.0 MW
Gross Trenton 330.0 MW
Gross Tuft's Cove 390.8 MW
Gross Wreck Cove 50.0 MW
Gross Gas Turbine 24.0 MW
Gross Small Hydro 182.4 MW
Net Stora Load 33.7 MW
Total BMPC Load 75.5 MW

Bus - VOLTAGE (KV/PU)
Branch - MW/MVAR
Equipment - MW/MVAR
110.0%RATEB
1.050UV 0.950UV
KV: <=25.000 <=69.000 <=138.000 <=230.000 <=345.000 >345.000

Figure ___

NSX 0.1 MW

CBX 731.8 MW

ONI 961.2 MW

ONS 850.7 MW

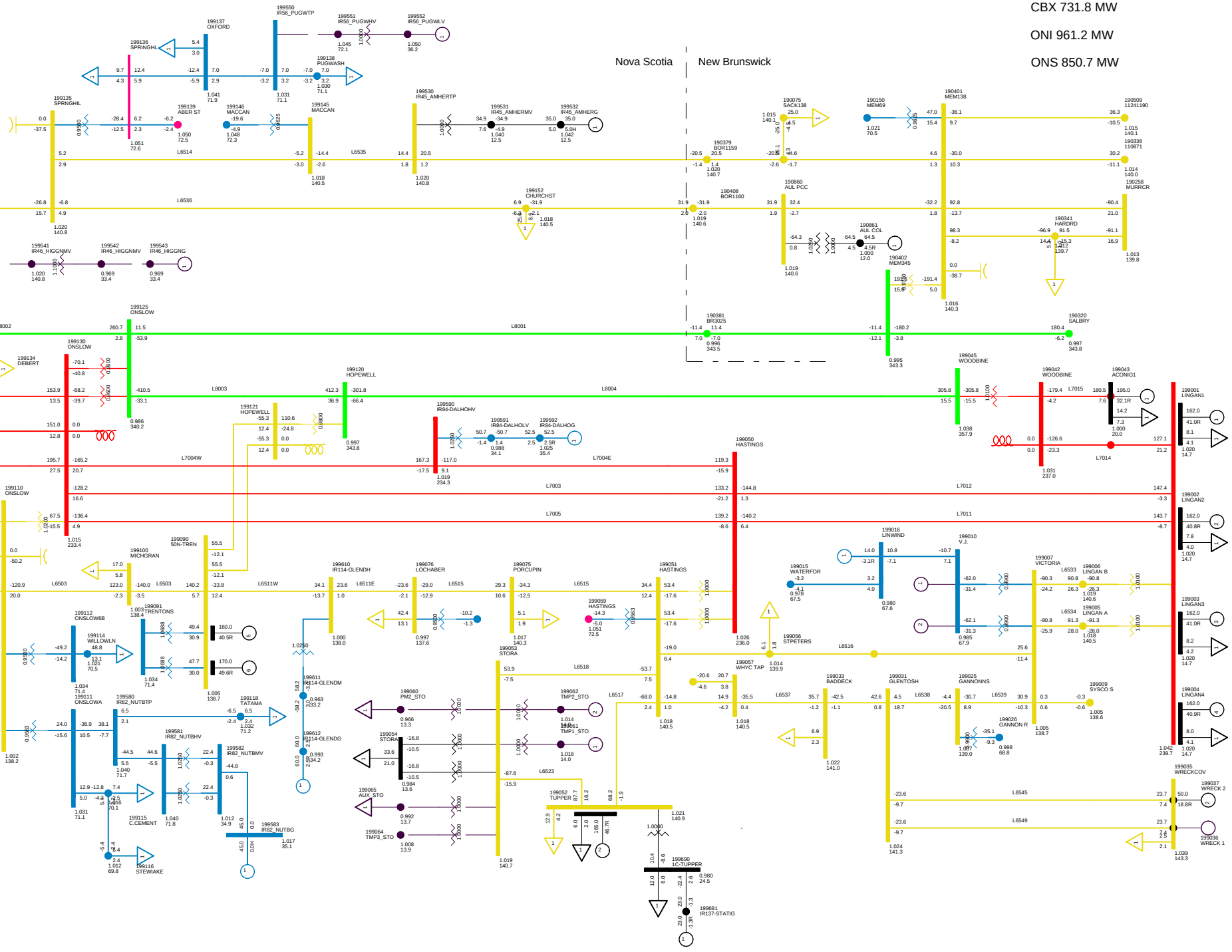

2013 WINTER PEAK STORA MIN
NS-NB=0; NB-NE=500; CBX=732; ONI=961 ONS=851
NORTHEASTERN NS SUN, FEB 15 2009 16:05

Total Wind Gen: 290.1 MW | Gross Tupper 165.0 MW | Gross Wreck Cove 50.0 MW | Net Stora Load 33.7 MW
Gross Lingan 648.0 MW | Gross Trenton 330.0 MW | Gross Gas Turbine 24.0 MW | Total BMPC Load 75.5 MW
Gross Pt Aconi 195.0 MW | Gross Tuft's Cove 390.8 MW | Gross Small Hydro 182.4 MW

Bus - VOLTAGE (KV/PU)
Branch - MW/MVAR
Equipment - MW/MVAR
110.0%RATEB
1.050OV 0.950UV
KV: <=25.000 <=69.000 <=138.000 <=230.000 <=345.000 >345.000

Figure ___

NSX 14.8 MW

CBX 731.4 MW

ONI 975.6 MW

ONS 850.3 MW

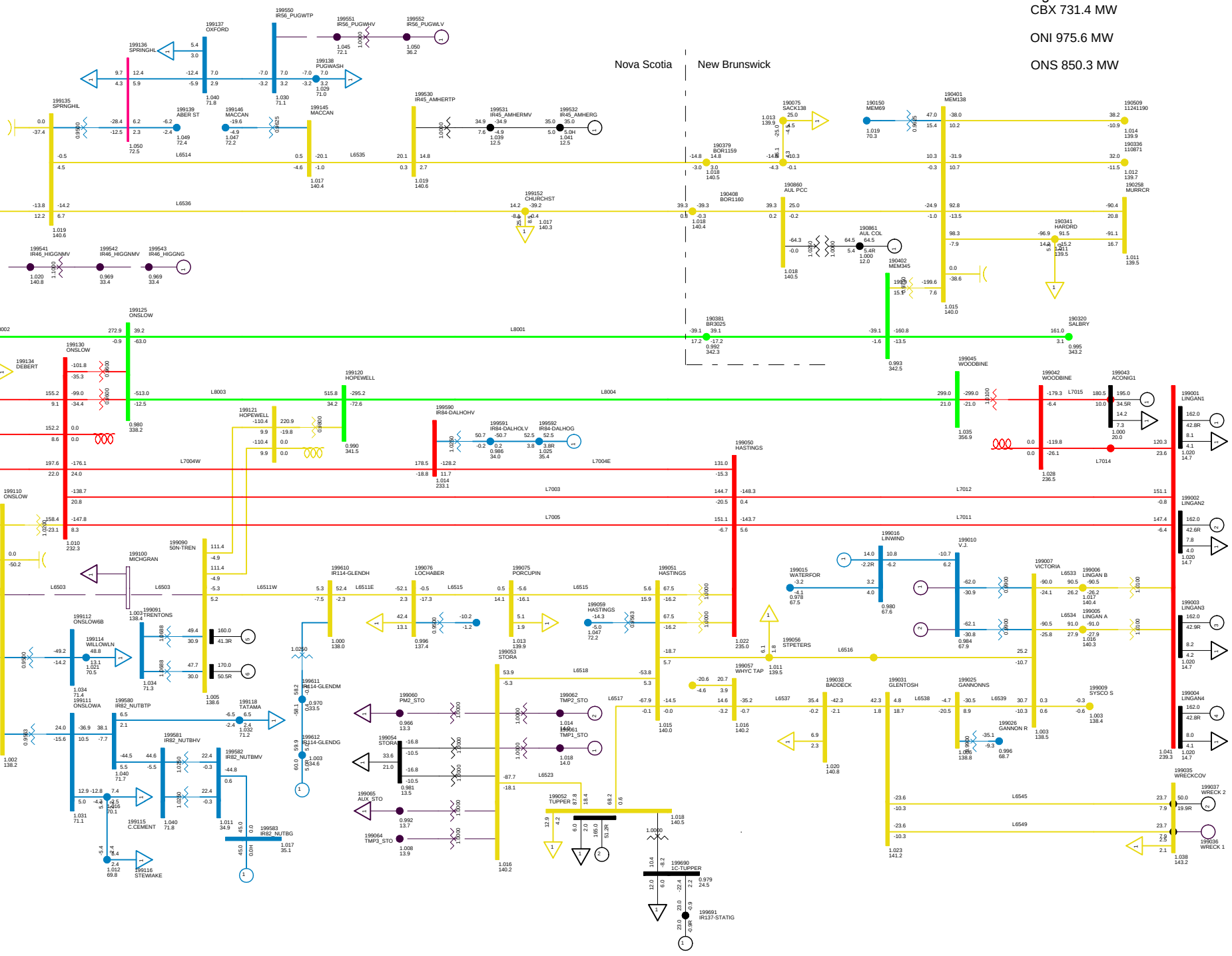

2013WP-NS-0
C12 LOSE 6503
NORTHEASTERN NS SUN, FEB 15 2009 16:05

Total Wind Gen: 290.1 MW | Gross Tupper 165.0 MW | Gross Wreck Cove 50.0 MW | Net Stora Load 33.7 MW
Gross Lingan 648.0 MW | Gross Trenton 330.0 MW | Gross Gas Turbine 24.0 MW | Total BMPC Load 75.5 MW
Gross Pt Aconi 195.0 MW | Gross Tuft's Cove 390.8 MW | Gross Small Hydro 182.4 MW

Bus - VOLTAGE (KV/PU)
Branch - MW/MVAR
Equipment - MW/MVAR
110.0%RATEB
1.050OV 0.950UV
KV: <=25.000 <=69.000 <=138.000 <=230.000 <=345.000 >345.000

Figure ___

NSX 4.6 MW

CBX 732.2 MW

ONI 965.6 MW

ONS 850.6 MW

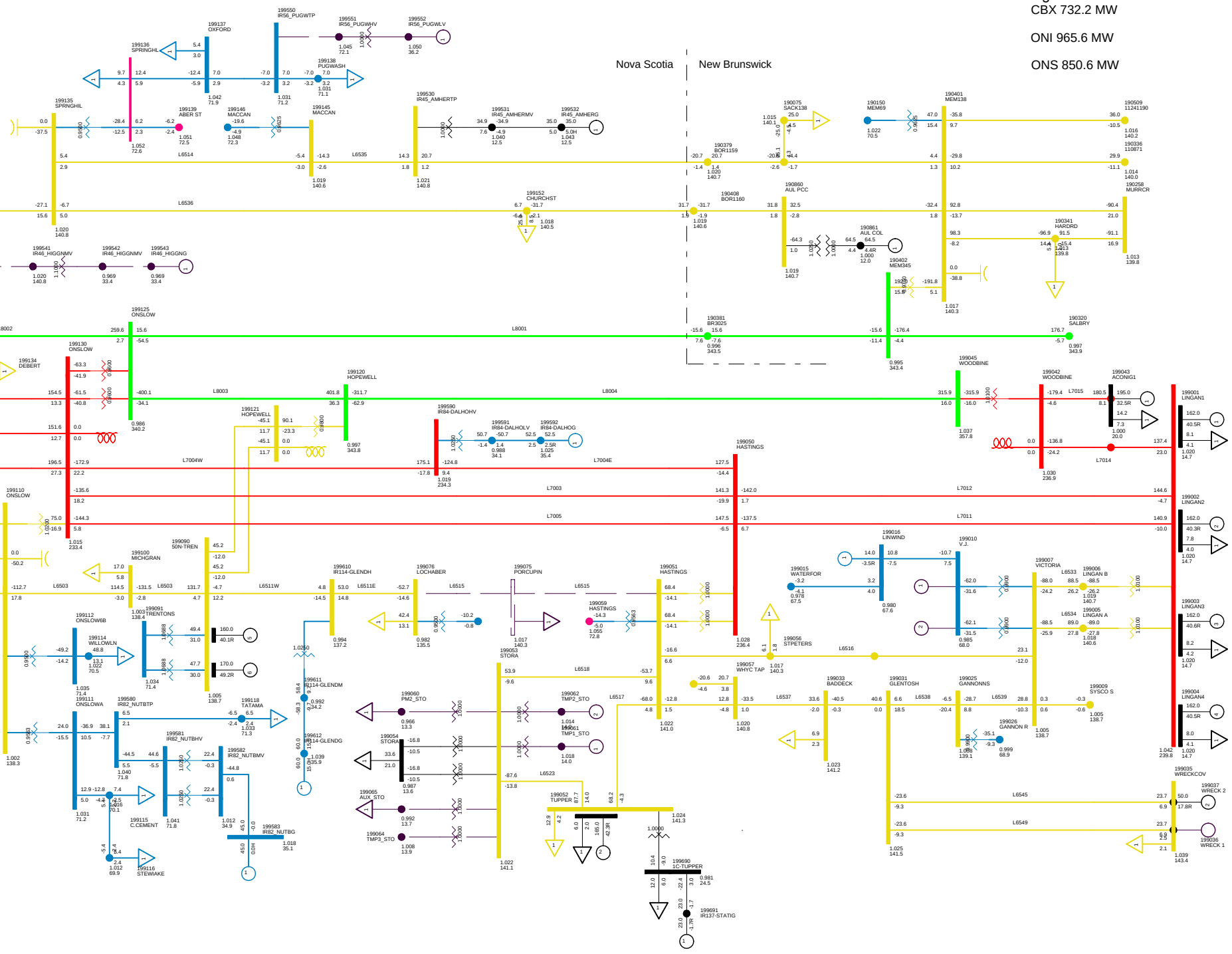

2013WP-NS-0
C13 LOSE L6511
NORTHEASTERN NS SUN, FEB 15 2009 16:05

Total Wind Gen: 290.1 MW | Gross Tupper 165.0 MW | Gross Wreck Cove 50.0 MW | Net Stora Load 33.7 MW
Gross Lingan 648.0 MW | Gross Trenton 330.0 MW | Gross Gas Turbine 24.0 MW | Total BMPC Load 75.5 MW
Gross Pt Aconi 195.0 MW | Gross Tuft's Cove 390.8 MW | Gross Small Hydro 182.4 MW

Bus - VOLTAGE (KV/PU)
Branch - MW/MVAR
Equipment - MW/MVAR
110.0%RATEB
1.050OV 0.950UV
KV: <=25.000 <=69.000 <=138.000 <=230.000 <=345.000 >345.000

Figure ___

NSX -0.5 MW

CBX 731.6 MW

ONI 960.6 MW

ONS 850.7 MW

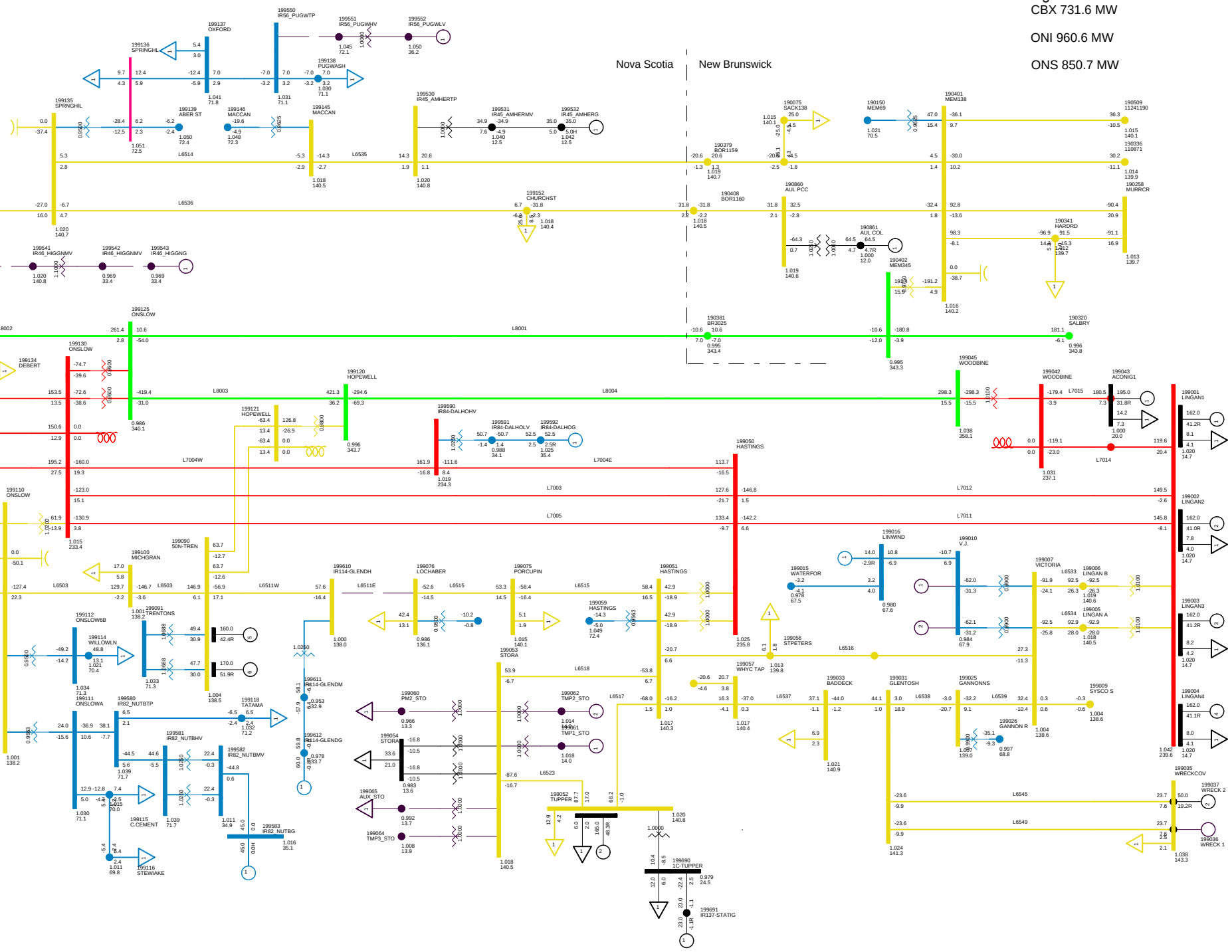

2013WP-NS-0
C14 LOSE L6511E
NORTHEASTERN NS SUN, FEB 15 2009 16:05

Total Wind Gen: 290.1 MW | Gross Tupper 165.0 MW | Gross Wreck Cove 50.0 MW | Net Stora Load 33.7 MW
Gross Lingan 648.0 MW | Gross Trenton 330.0 MW | Gross Gas Turbine 24.0 MW | Total BMPC Load 75.5 MW
Gross Pt Aconi 195.0 MW | Gross Tuft's Cove 390.8 MW | Gross Small Hydro 182.4 MW

Bus - VOLTAGE (KV/PU)
Branch - MW/MVAR
Equipment - MW/MVAR
110.0%RATEB
1.050OV 0.950UV
KV: <=25.000 <=69.000 <=138.000 <=230.000 <=345.000 >345.000

Figure ___

NSX -0.4 MW

CBX 732.1 MW

ONI 960.7 MW

ONS 850.6 MW

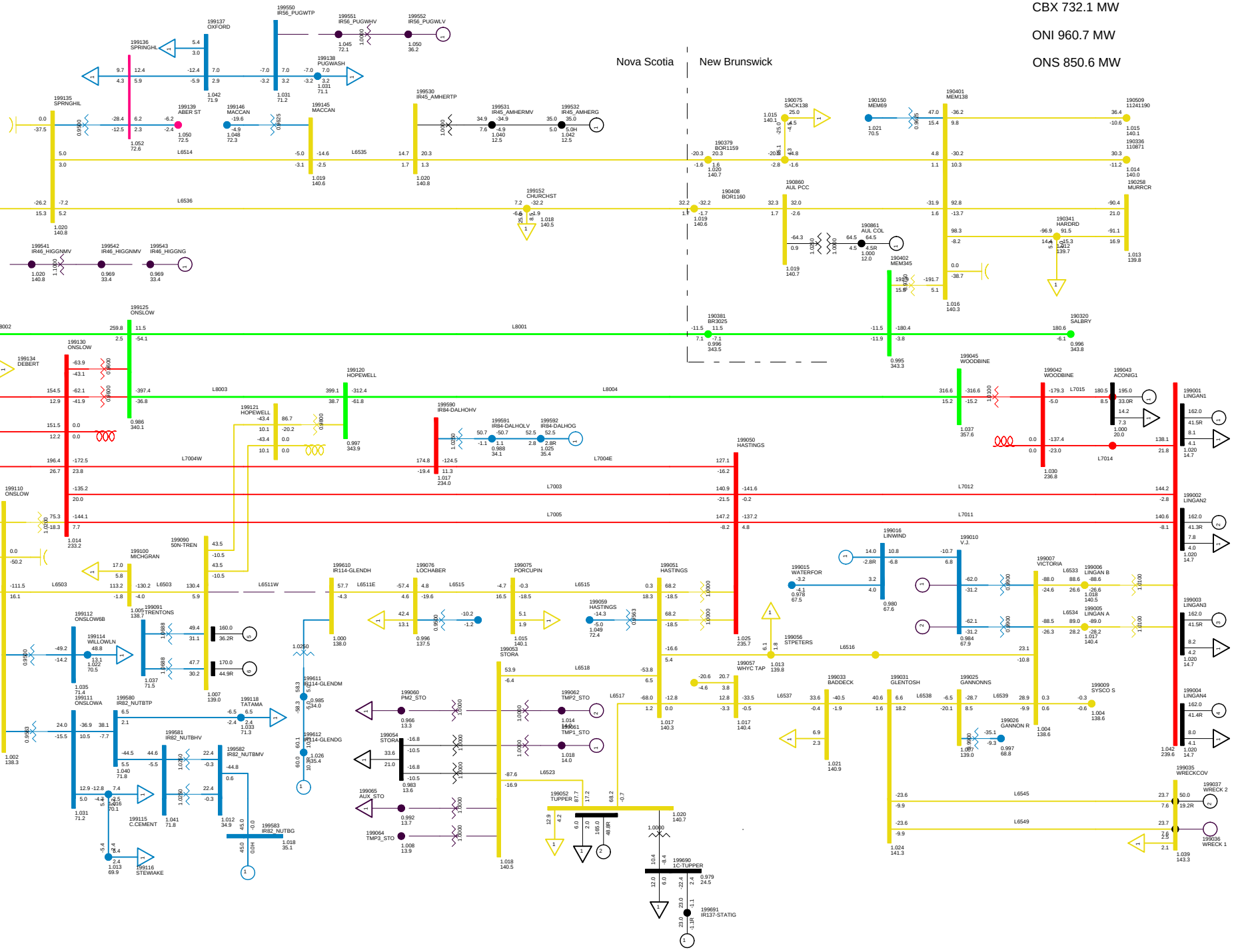

2013WP-NS-0
C15 LOSE L6511W
NORTHEASTERN NS SUN, FEB 15 2009 16:05

Total Wind Gen: 290.1 MW | Gross Tupper 165.0 MW | Gross Wreck Cove 50.0 MW | Net Stora Load 33.7 MW
Gross Lingan 648.0 MW | Gross Trenton 330.0 MW | Gross Gas Turbine 24.0 MW | Total BMPC Load 75.5 MW
Gross Pt Aconi 195.0 MW | Gross Tuft's Cove 390.8 MW | Gross Small Hydro 182.4 MW

Bus - VOLTAGE (KV/PU)
Branch - MW/MVAR
Equipment - MW/MVAR
110.0%RATEB
1.050OV 0.950UV
KV: <=25.000 <=69.000 <=138.000 <=230.000 <=345.000 >345.000

Figure ___

NSX 14.2 MW

CBX 731.9 MW

ONI 961.4 MW

ONS 850.9 MW

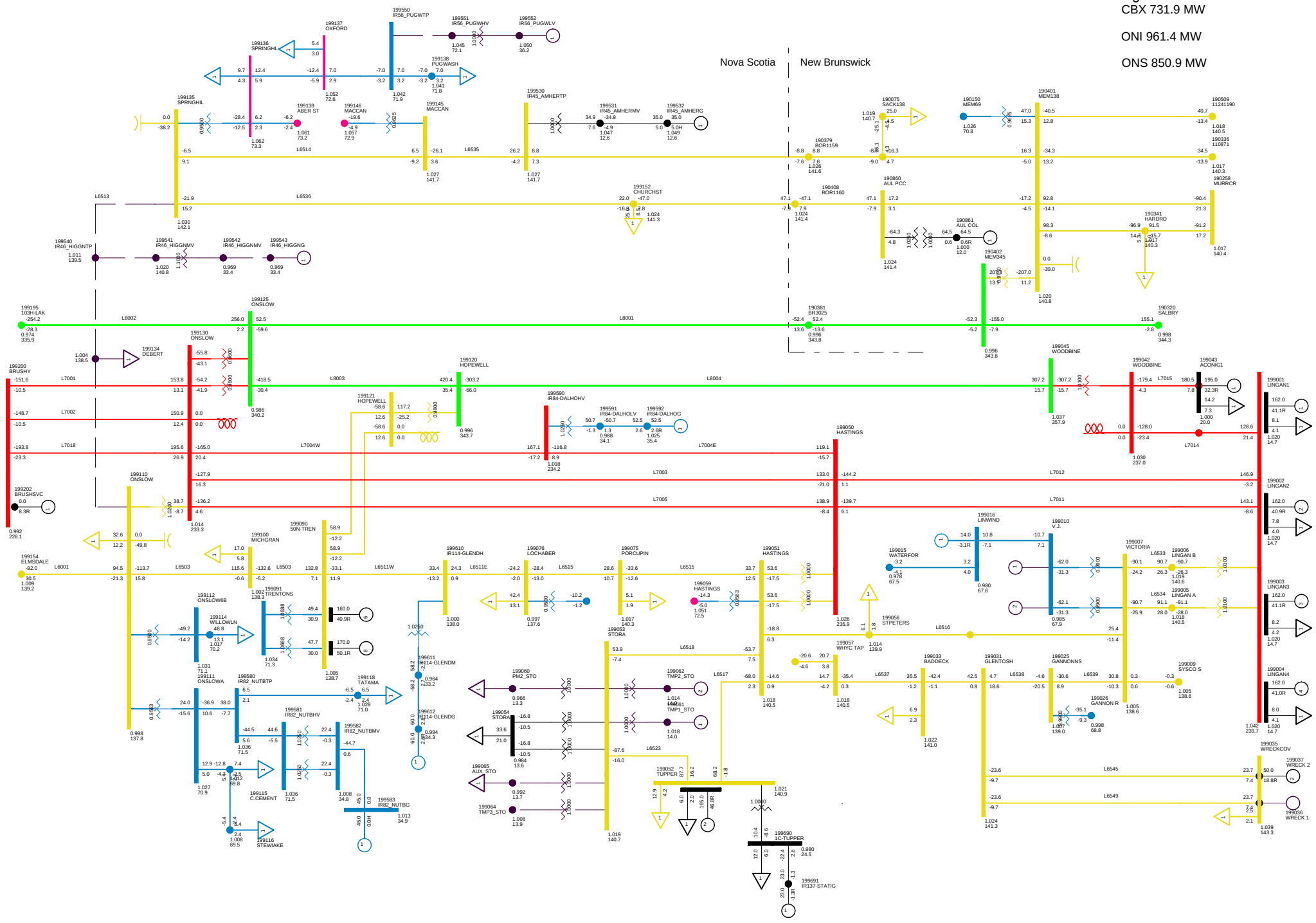

2013WP-NS-0
C16 LOSE L6513
NORTHEASTERN NS SUN, FEB 15 2009 16:05

Total Wind Gen: 290.1 MW | Gross Tupper 165.0 MW | Gross Wreck Cove 50.0 MW | Net Stora Load 33.7 MW
Gross Lingan 648.0 MW | Gross Trenton 330.0 MW | Gross Gas Turbine 24.0 MW | Total BMPC Load 75.5 MW
Gross Pt Aconi 195.0 MW | Gross Tuft's Cove 390.8 MW | Gross Small Hydro 182.4 MW

Bus - VOLTAGE (KV/PU)
Branch - MW/MVAR
Equipment - MW/MVAR
110.0%RATEB
1.050OV 0.950UV
KV: <=25.000 <=69.000 <=138.000 <=230.000 <=345.000 >345.000

Figure ___

NSX 25.2 MW
CBX 731.9 MW
ONI 961.2 MW
ONS 850.6 MW

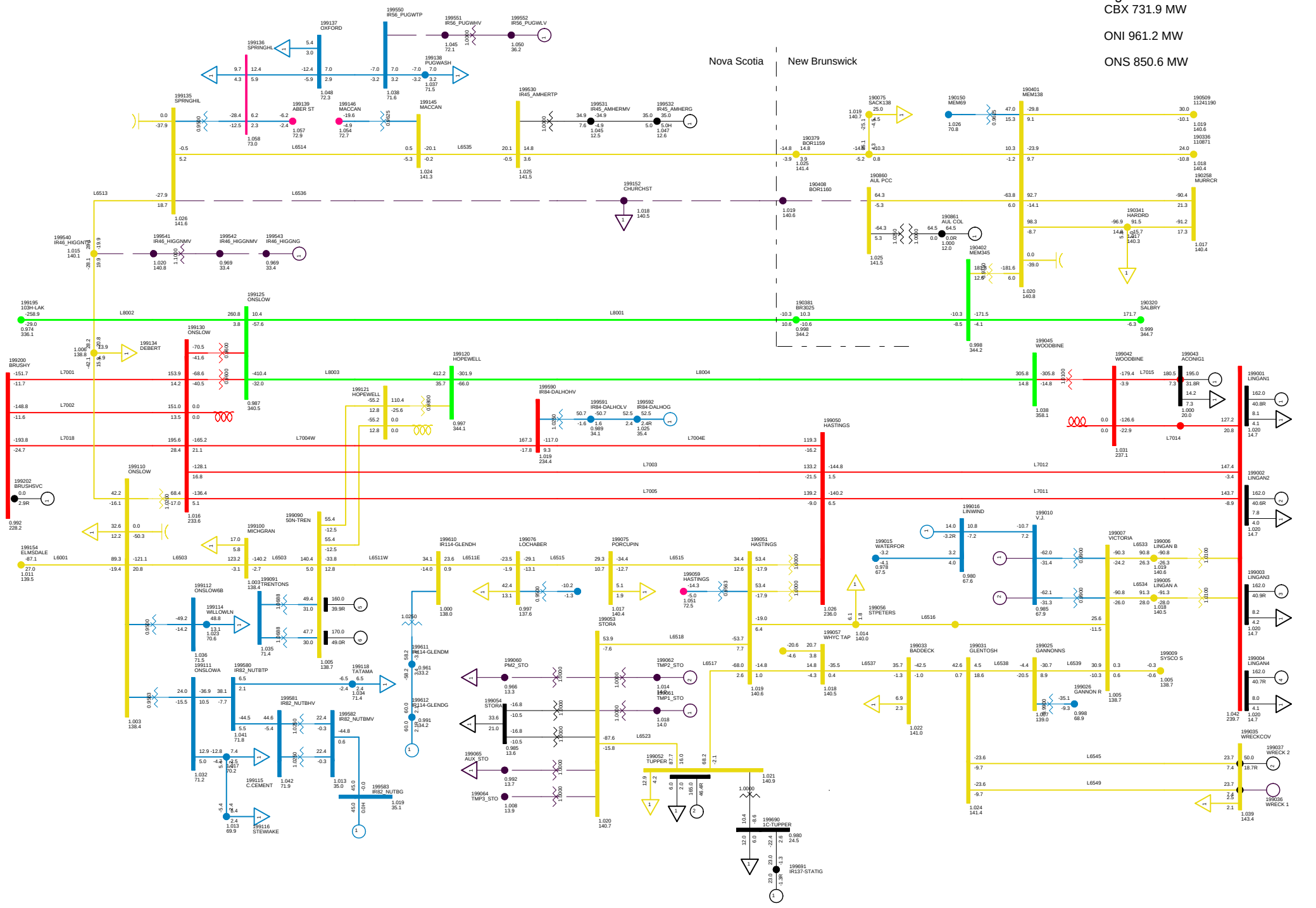

2013WP-NS-0
C17 LOSE L6536
NORTHEASTERN NS SUN, FEB 15 2009 16:05

Total Wind Gen: 290.1 MW | Gross Tupper 165.0 MW | Gross Wreck Cove 50.0 MW | Net Stora Load 33.7 MW
Gross Lingan 648.0 MW | Gross Trenton 330.0 MW | Gross Gas Turbine 24.0 MW | Total BMPC Load 75.5 MW
Gross Pt Aconi 195.0 MW | Gross Tuft's Cove 390.8 MW | Gross Small Hydro 182.4 MW

Bus - VOLTAGE (KV/PU)
Branch - MW/MVAR
Equipment - MW/MVAR
110.0%RATEB
1.050OV 0.950UV
KV: <=25.000 <=69.000 <=138.000 <=230.000 <=345.000 >345.000

Figure ___

NSX 0.0 MW
CBX 731.8 MW
ONI 961.2 MW
ONS 850.6 MW

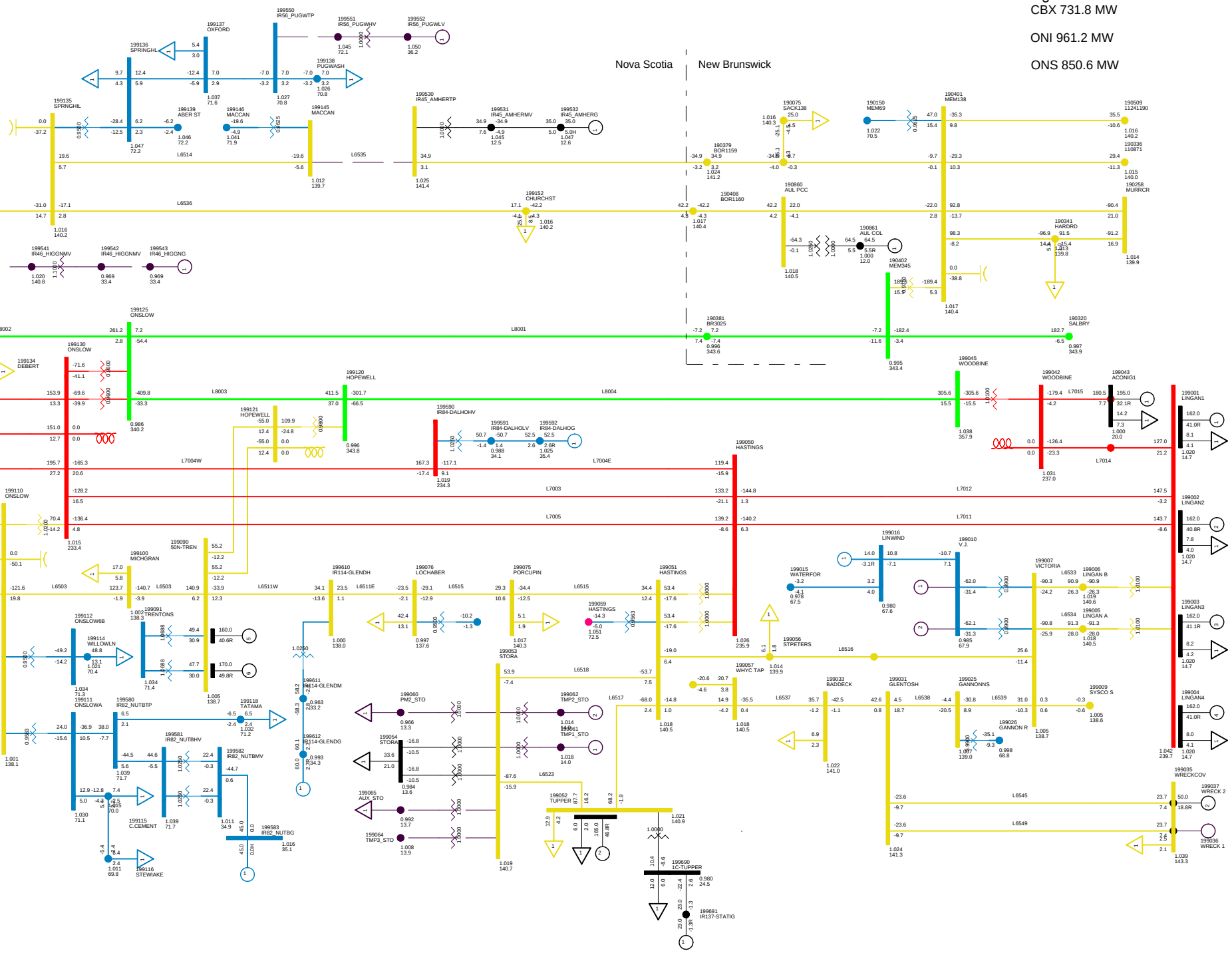

2013WP-NS-0
C18 LOSE L6535S
NORTHEASTERN NS SUN, FEB 15 2009 16:06

Total Wind Gen: 290.1 MW | Gross Tupper 165.0 MW | Gross Wreck Cove 50.0 MW | Net Stora Load 33.7 MW
Gross Lingan 648.0 MW | Gross Trenton 330.0 MW | Gross Gas Turbine 24.0 MW | Total BMPC Load 75.5 MW
Gross Pt Aconi 195.0 MW | Gross Tuft's Cove 390.8 MW | Gross Small Hydro 182.4 MW

Bus - VOLTAGE (KV/PU)
Branch - MW/MVAR
Equipment - MW/MVAR
110.0%RATEB
1.0500V 0.950UV
KV: <=25.000 <=69.000 <=138.000 <=230.000 <=345.000 >345.000

Figure ___

NSX 0.4 MW

CBX 731.8 MW

ONI 961.2 MW

ONS 850.7 MW

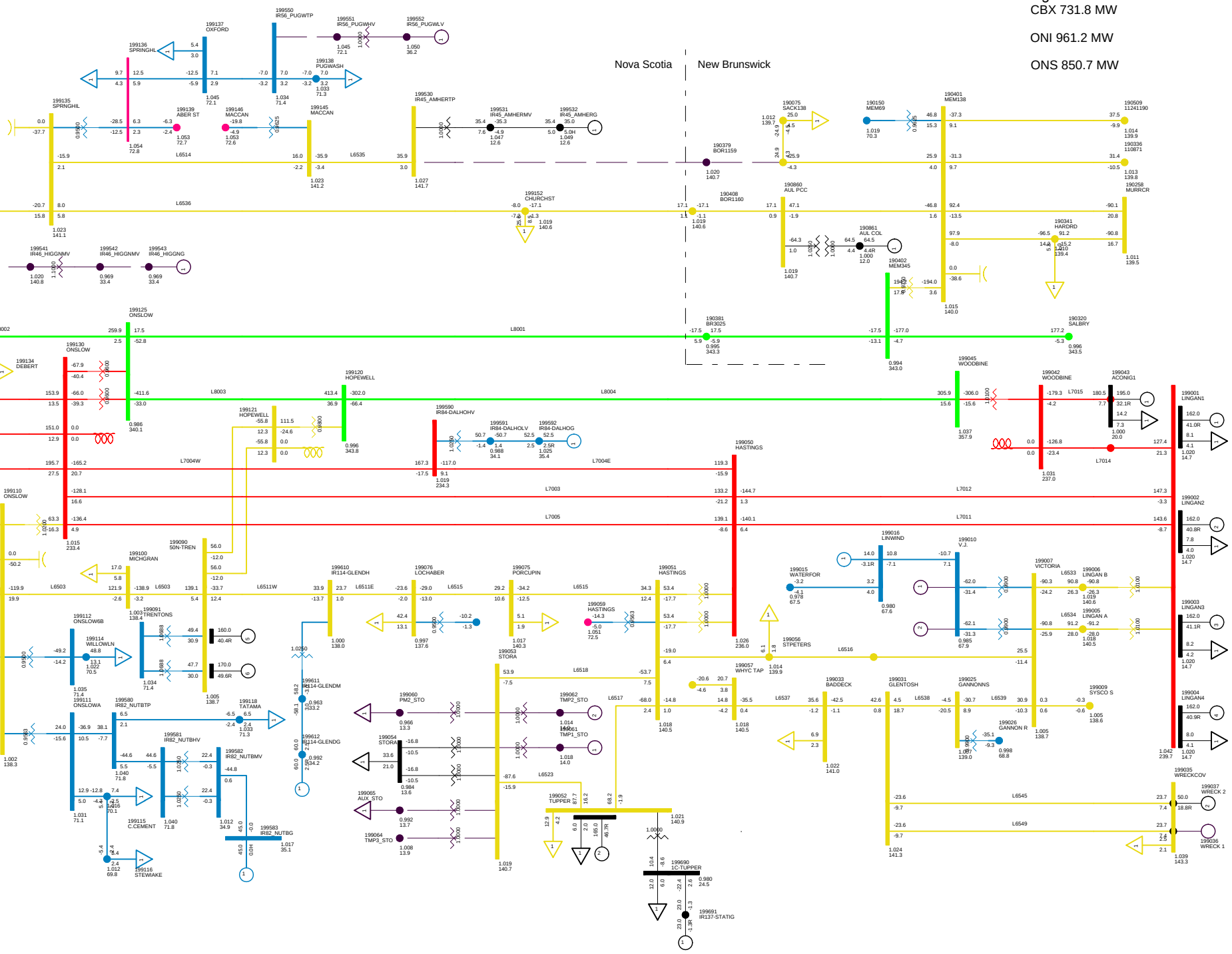

2013WP-NS-0
C19 LOSE L6535N
NORTHEASTERN NS SUN, FEB 15 2009 16:06

Total Wind Gen: 290.1 MW | Gross Tupper 165.0 MW | Gross Wreck Cove 50.0 MW | Net Stora Load 33.7 MW
Gross Lingan 648.0 MW | Gross Trenton 330.0 MW | Gross Gas Turbine 24.0 MW | Total BMPC Load 75.5 MW
Gross Pt Aconi 195.0 MW | Gross Tuft's Cove 390.8 MW | Gross Small Hydro 182.4 MW

Bus - VOLTAGE (KV/PU)
Branch - MW/MVAR
Equipment - MW/MVAR
110.0%RATEB
1.0500V 0.950UV
KV: <=25.000 <=69.000 <=138.000 <=230.000 <=345.000 >345.000

Figure ___

NSX 25.3 MW

CBX 758.4 MW

ONI 986.5 MW

ONS 850.7 MW

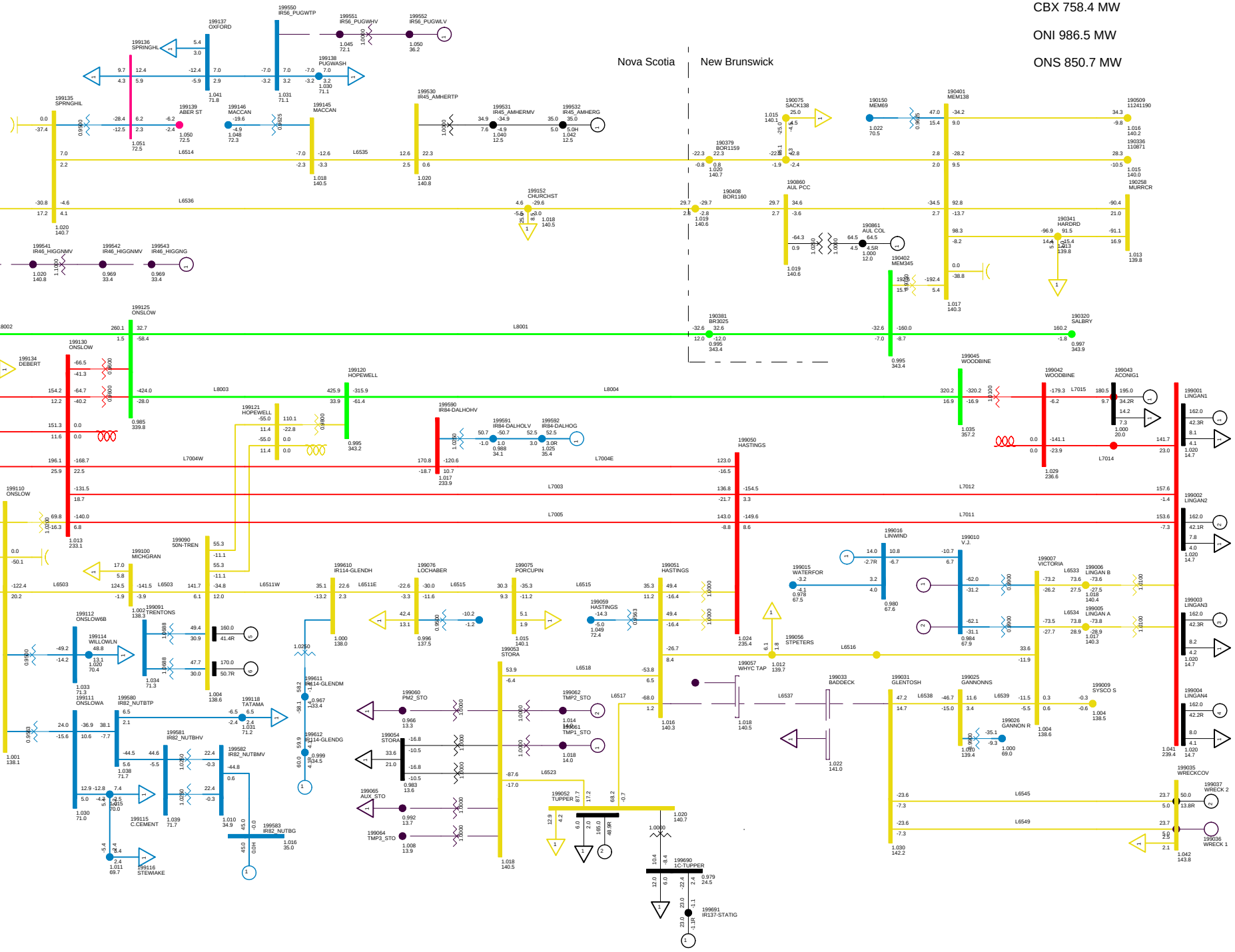

2013WP-NS-0
C20 LOSE L6537
NORTHEASTERN NS SUN, FEB 15 2009 16:06

Total Wind Gen: 290.1 MW | Gross Tupper 165.0 MW | Gross Wreck Cove 50.0 MW | Net Stora Load 33.7 MW
Gross Lingan 648.0 MW | Gross Trenton 330.0 MW | Gross Gas Turbine 24.0 MW | Total BMPC Load 75.5 MW
Gross Pt Aconi 195.0 MW | Gross Tuft's Cove 390.8 MW | Gross Small Hydro 182.4 MW

Bus - VOLTAGE (KV/PU)
Branch - MW/MVAR
Equipment - MW/MVAR
110.0%RATEB
1.050UV 0.950UV
KV: <=25.000 <=69.000 <=138.000 <=230.000 <=345.000 >345.000

Figure ___

NSX 5.7 MW

CBX 737.6 MW

ONI 966.8 MW

ONS 850.6 MW

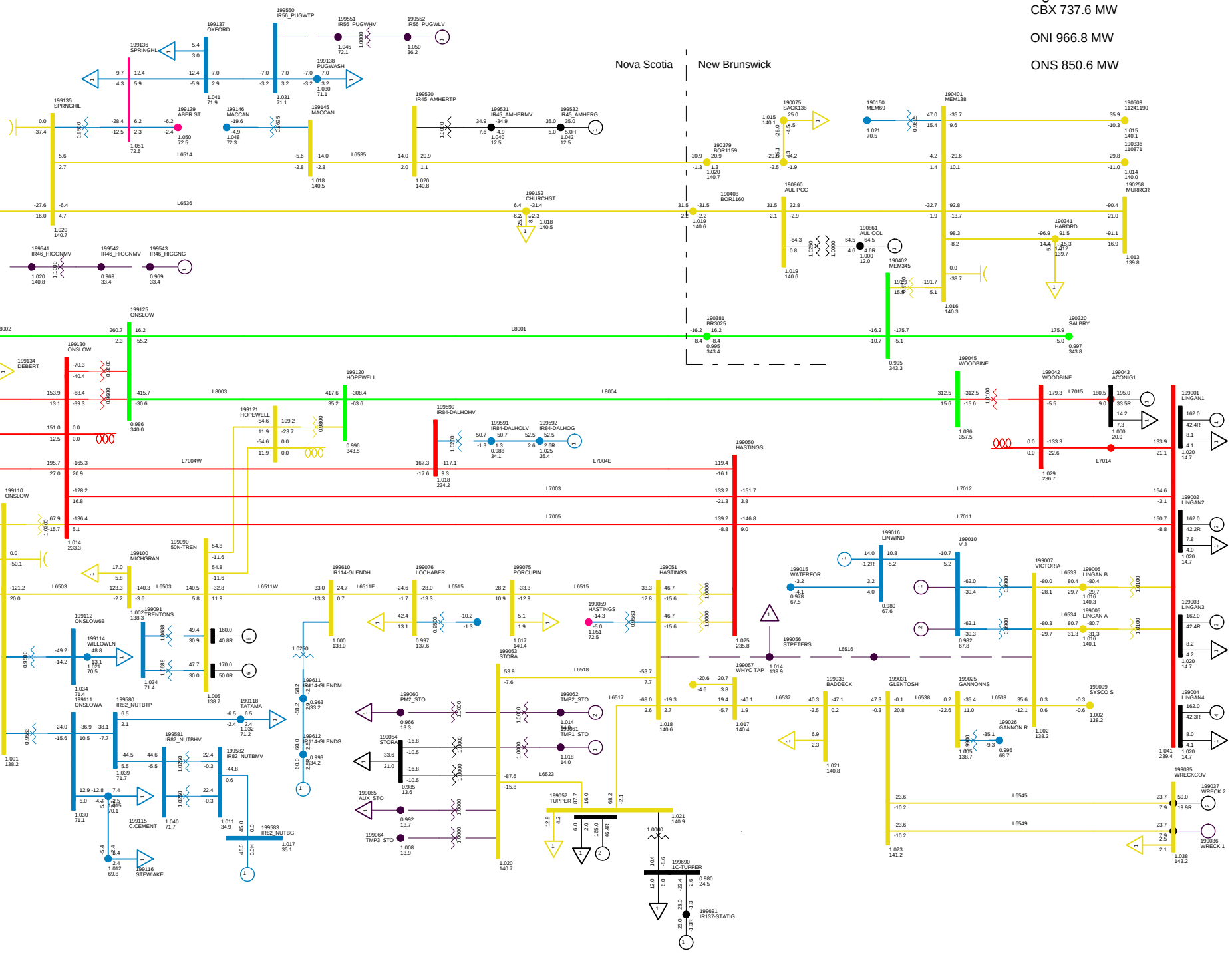

2013WP-NS-0
C21 LOSE L6516
NORTHEASTERN NS SUN, FEB 15 2009 16:06

Total Wind Gen: 290.1 MW | Gross Tupper 165.0 MW | Gross Wreck Cove 50.0 MW | Net Stora Load 33.7 MW
Gross Lingan 648.0 MW | Gross Trenton 330.0 MW | Gross Gas Turbine 24.0 MW | Total BMPC Load 75.5 MW
Gross Pt Aconi 195.0 MW | Gross Tuft's Cove 390.8 MW | Gross Small Hydro 182.4 MW

Bus - VOLTAGE (KV/PU)
Branch - MW/MVAR
Equipment - MW/MVAR
110.0%RATEB
1.050OV 0.950UV
KV: <=25.000 <=69.000 <=138.000 <=230.000 <=345.000 >345.000

Figure ___

NSX -0.1 MW

CBX 731.7 MW

ONI 961.0 MW

ONS 850.6 MW

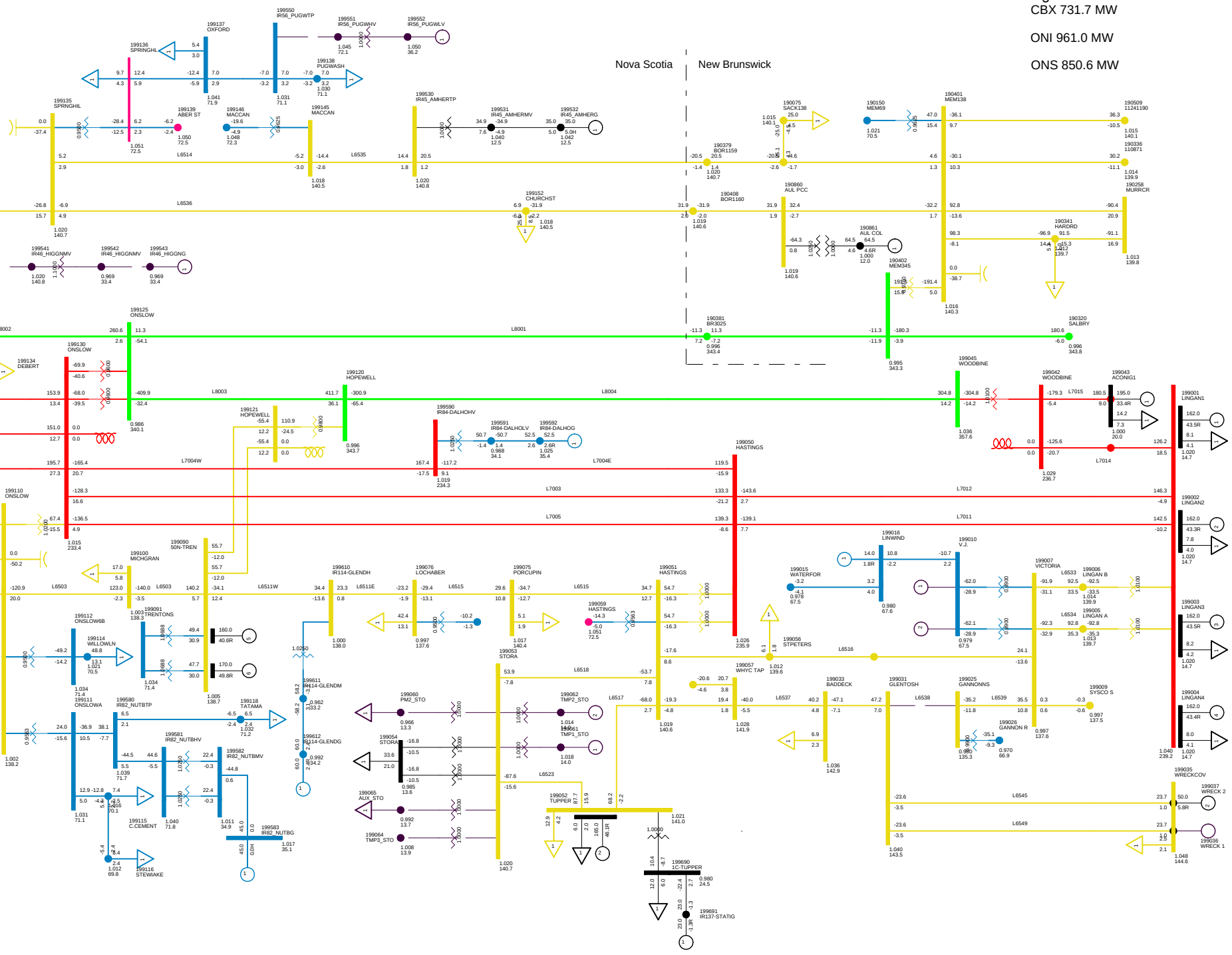

2013WP-NS-0
C22 LOSE L6538
NORTHEASTERN NS SUN, FEB 15 2009 16:06

Total Wind Gen: 290.1 MW | Gross Tupper 165.0 MW | Gross Wreck Cove 50.0 MW | Net Stora Load 33.7 MW
Gross Lingan 648.0 MW | Gross Trenton 330.0 MW | Gross Gas Turbine 24.0 MW | Total BMPC Load 75.5 MW
Gross Pt Aconi 195.0 MW | Gross Tuft's Cove 390.8 MW | Gross Small Hydro 182.4 MW

Bus - VOLTAGE (KV/PU)
Branch - MW/MVAR
Equipment - MW/MVAR
110.0%RATEB
1.050UV 0.950UV
KV: <=25.000 <=69.000 <=138.000 <=230.000 <=345.000 >345.000

Figure ___

Total Wind Gen: 290.1 MW
Gross Tupper 165.0 MW
Gross Wreck Cove 50.0 MW
Gross Lingan 648.0 MW
Gross Trenton 330.0 MW
Gross Gas Turbine 24.0 MW
Gross Pt Aconi 195.0 MW
Gross Tuft's Cove 390.8 MW
Gross Small Hydro 182.4 MW
Net Stora Load 33.7 MW
Total BMPC Load 75.5 MW

NSX 0.1 MW
CBX 731.8 MW
ONI 961.2 MW
ONS 850.7 MW

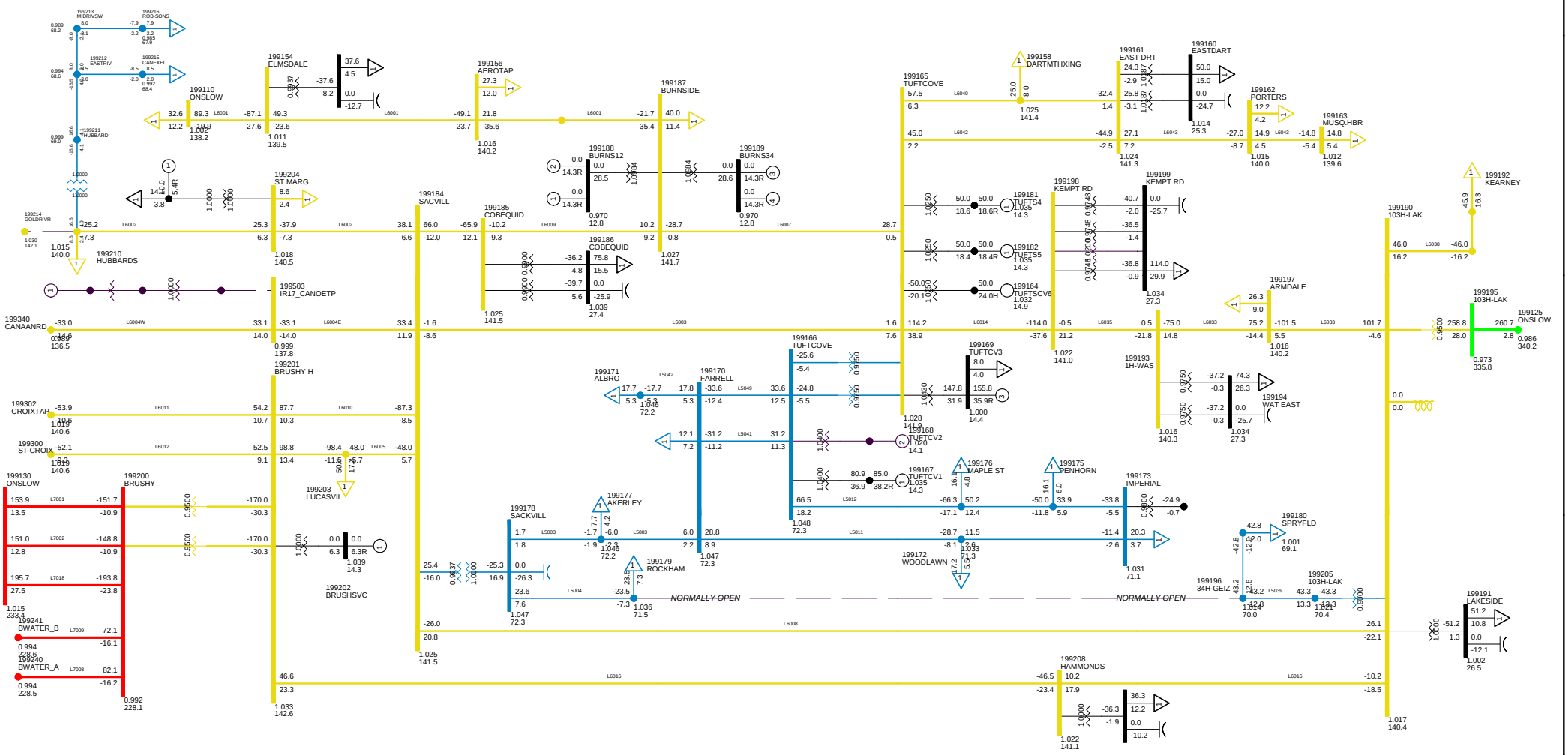

2013 WINTER PEAK STORA MIN
NS-NB=0; NB-NE=500; CBX=732; ONI=961 ONS=851
METRO ZONE SUN, FEB 15 2009 16:06

Bus - VOLTAGE (KV/PU)
Branch - MW/MVAR
Equipment - MW/MVAR
100.0%RATE8
1.050OV 0.950UV
KV: <=30.000 <=69.000 <=138.000 <=230.000 <=345.000 >345.000

Figure __

Total Wind Gen: 290.1 MW
Gross Tupper 165.0 MW
Gross Wreck Cove 50.0 MW
Gross Lingan 648.0 MW
Gross Trenton 330.0 MW
Gross Gas Turbine 24.0 MW
Gross Pt Aconi 195.0 MW
Gross Tuft's Cove 390.8 MW
Gross Small Hydro 182.4 MW
Net Stora Load 33.7 MW
Total BMPC Load 75.5 MW

NSX 0.1 MW
CBX 731.8 MW
ONI 961.2 MW
ONS 850.7 MW

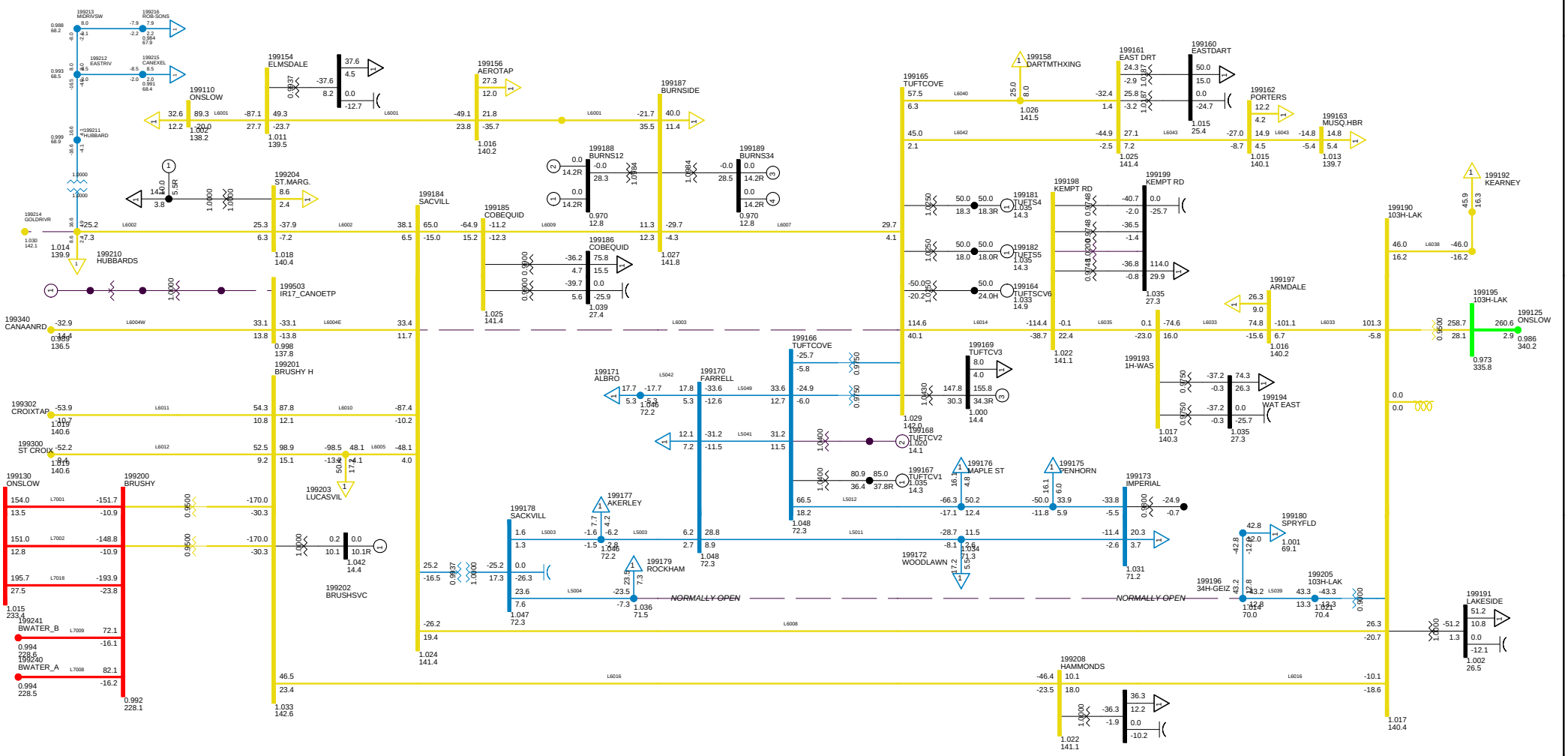

2013WP-NS-0
C23 LOSE L6003
METRO ZONE SUN, FEB 15 2009 16:06

Bus - VOLTAGE (KV/PU)
Branch - MW/MVAR
Equipment - MW/MVAR
100.0%RATE8
1.050OV 0.950UV
KV: <=30.000 <=69.000 <=138.000 <=230.000 <=345.000 >345.000

Figure __

Total Wind Gen: 290.1 MW
Gross Tupper 165.0 MW
Gross Wreck Cove 50.0 MW
Gross Lingan 648.0 MW
Gross Trenton 330.0 MW
Gross Gas Turbine 24.0 MW
Gross Pt Aconi 195.0 MW
Gross Tuft's Cove 390.8 MW
Gross Small Hydro 182.4 MW
Net Stora Load 33.7 MW
Total BMPC Load 75.5 MW

NSX 51.7 MW
CBX 731.9 MW
ONI 961.4 MW
ONS 799.1 MW

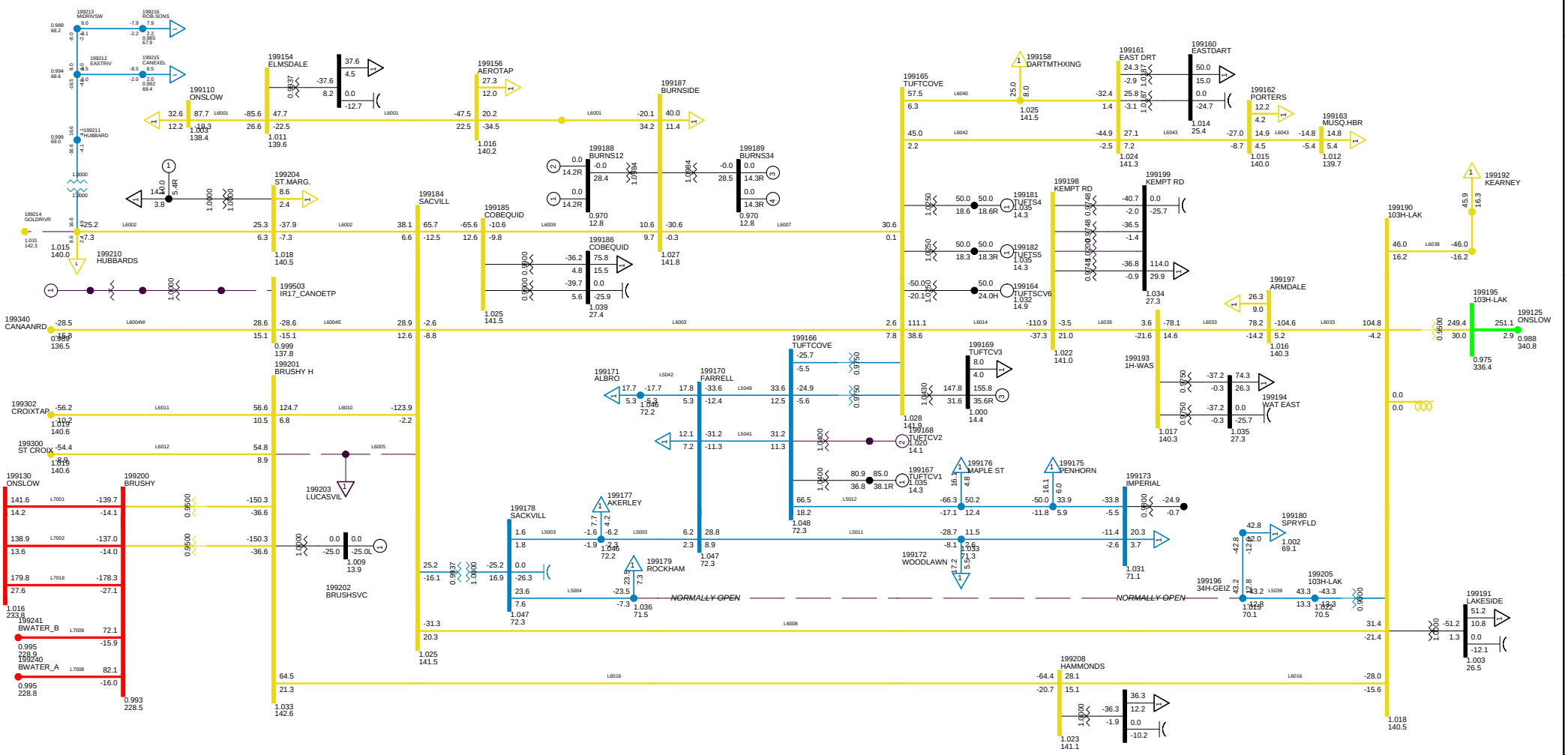

2013WP-NS-0
C24 LOSE L6005
METRO ZONE SUN, FEB 15 2009 16:06

Bus - VOLTAGE (KV/PU)
Branch - MW/MVAR
Equipment - MW/MVAR
100.0%RATE8
1.050OV 0.950UV
KV: <=30.000 <=69.000 <=138.000 <=230.000 <=345.000 >345.000

Figure __

Total Wind Gen: 290.1 MW
Gross Tupper 165.0 MW
Gross Wreck Cove 50.0 MW
Gross Lingan 648.0 MW
Gross Trenton 330.0 MW
Gross Gas Turbine 24.0 MW
Gross Pt Aconi 195.0 MW
Gross Tuft's Cove 390.8 MW
Gross Small Hydro 182.4 MW
Net Stora Load 33.7 MW
Total BMPC Load 75.5 MW

NSX -0.0 MW
CBX 731.8 MW
ONI 961.2 MW
ONS 850.8 MW

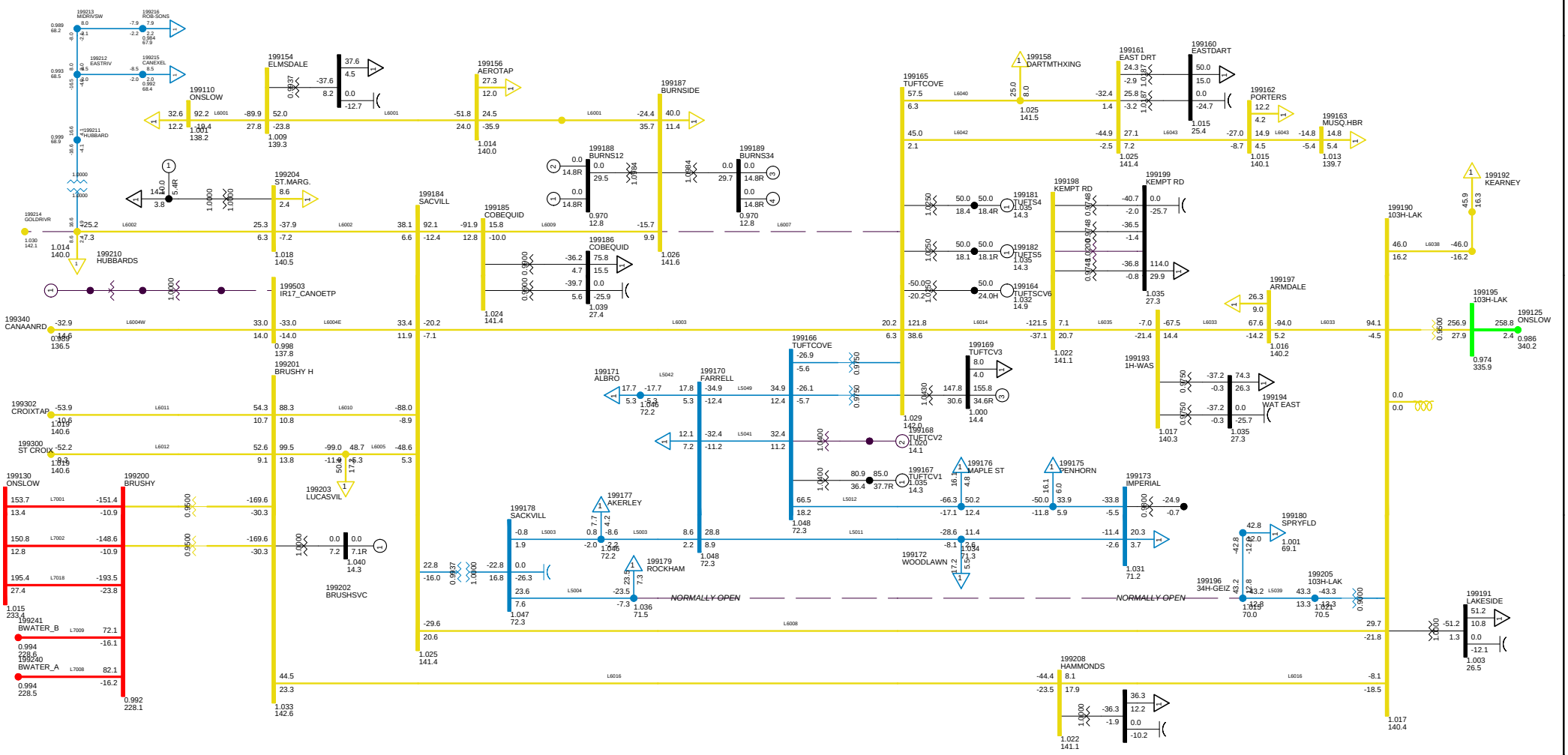

2013WP-NS-0
C25 LOSE L6007
METRO ZONE SUN, FEB 15 2009 16:07

Bus - VOLTAGE (KV/PU)
Branch - MW/MVAR
Equipment - MW/MVAR
100.0%RATE8
1.050OV 0.950UV
KV: <=30.000 <=69.000 <=138.000 <=230.000 <=345.000 >345.000

Figure __

Total Wind Gen: 290.1 MW
Gross Tupper 165.0 MW
Gross Wreck Cove 50.0 MW
Gross Lingan 648.0 MW
Gross Trenton 330.0 MW
Gross Gas Turbine 24.0 MW
Gross Pt Aconi 195.0 MW
Gross Tuft's Cove 390.8 MW
Gross Small Hydro 182.4 MW
Net Stora Load 33.7 MW
Total BMPC Load 75.5 MW

NSX -0.2 MW
CBX 731.8 MW
ONI 961.2 MW
ONS 850.9 MW

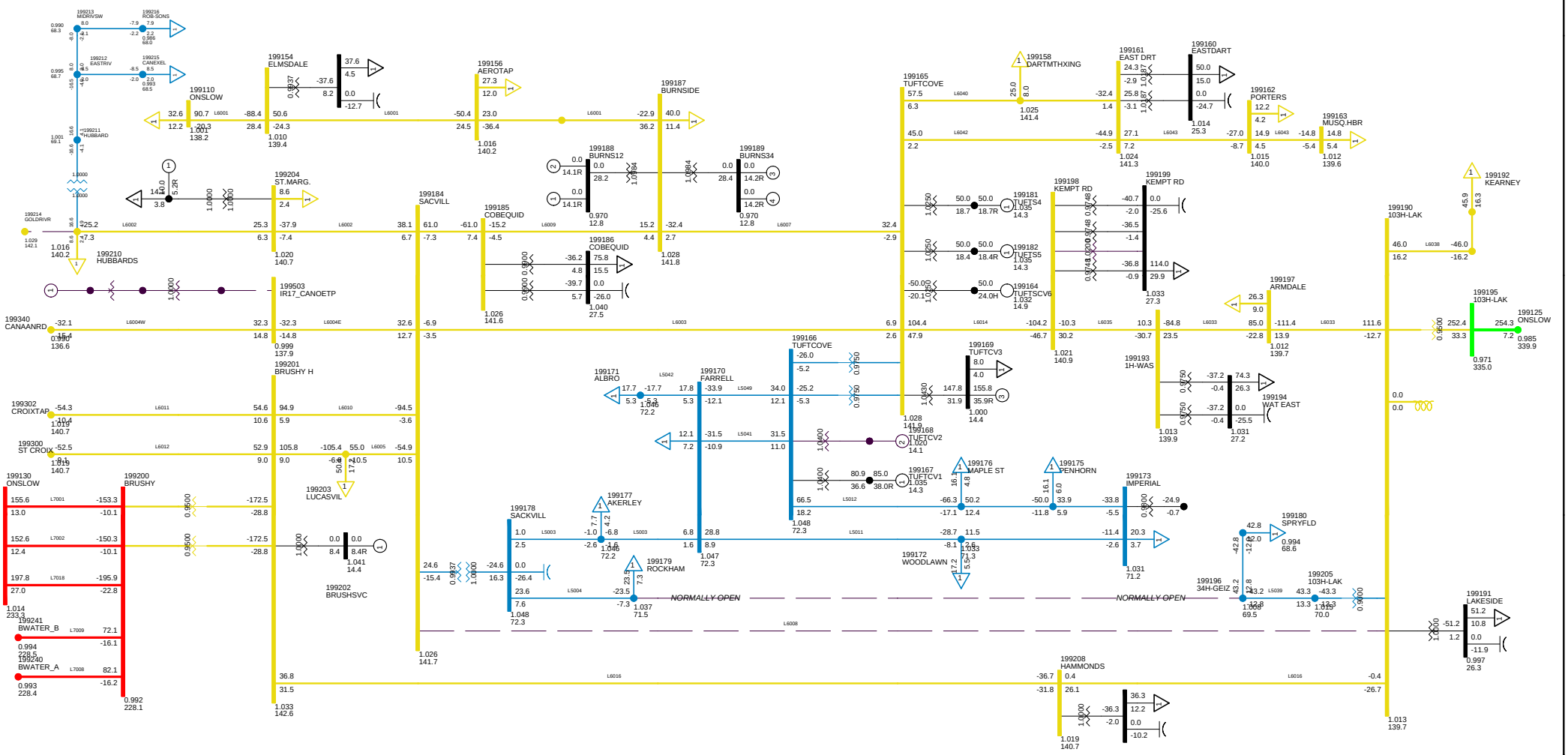

2013WP-NS-0
C26 LOSE L6008
METRO ZONE SUN, FEB 15 2009 16:07

Bus - VOLTAGE (KV/PU)
Branch - MW/MVAR
Equipment - MW/MVAR
100.0%RATE8
1.050OV 0.950UV
KV: <=30.000 <=69.000 <=138.000 <=230.000 <=345.000 >345.000

Figure __

Total Wind Gen: 290.1 MW
Gross Tupper 165.0 MW
Gross Wreck Cove 50.0 MW
Gross Lingan 648.0 MW
Gross Trenton 330.0 MW
Gross Gas Turbine 24.0 MW
Gross Pt Aconi 195.0 MW
Gross Tuft's Cove 390.8 MW
Gross Small Hydro 182.4 MW
Net Stora Load 33.7 MW
Total BMPC Load 75.5 MW

NSX 37.2 MW
CBX 731.9 MW
ONI 961.3 MW
ONS 813.5 MW

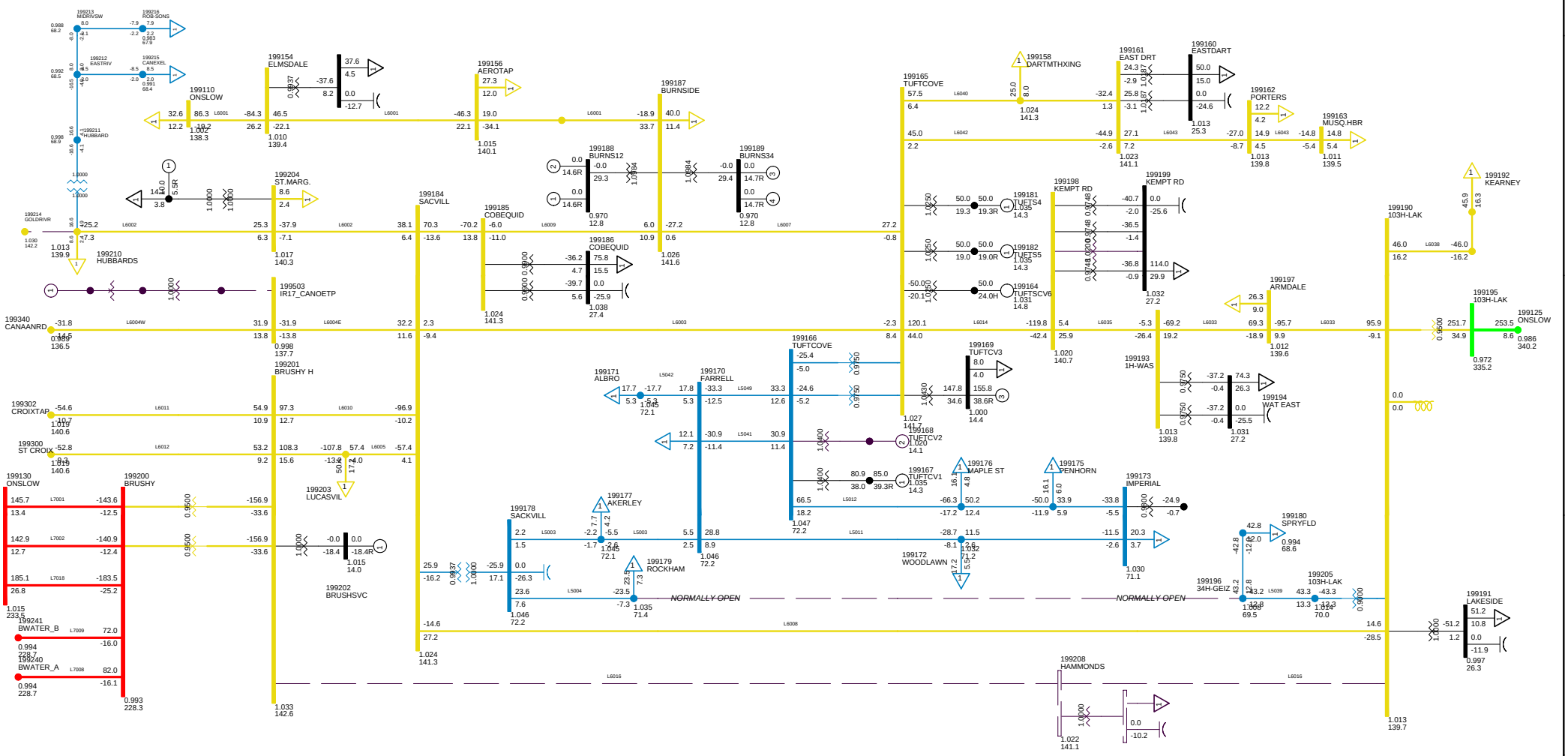

2013WP-NS-0
C27 LOSE L6009
METRO ZONE SUN, FEB 15 2009 16:07

Bus - VOLTAGE (KV/PU)
Branch - MW/MVAR
Equipment - MW/MVAR
100.0%RATE8
1.050OV 0.950UV
KV: <=30.000 <=69.000 <=138.000 <=230.000 <=345.000 >345.000

Figure __

Total Wind Gen: 290.1 MW | Gross Tupper 165.0 MW | Gross Wreck Cove 50.0 MW

Gross Lingan 648.0 MW | Gross Trenton 330.0 MW | Gross Gas Turbine 24.0 MW

Gross Pt Aconi 195.0 MW | Gross Tuft's Cove 390.8 MW | Gross Small Hydro 182.4 MW

Net Stora Load 33.7 MW | Total BMPC Load 75.5 MW

NSX -0.5 MW

CBX 731.8 MW

ONI 961.2 MW

ONS 851.3 MW

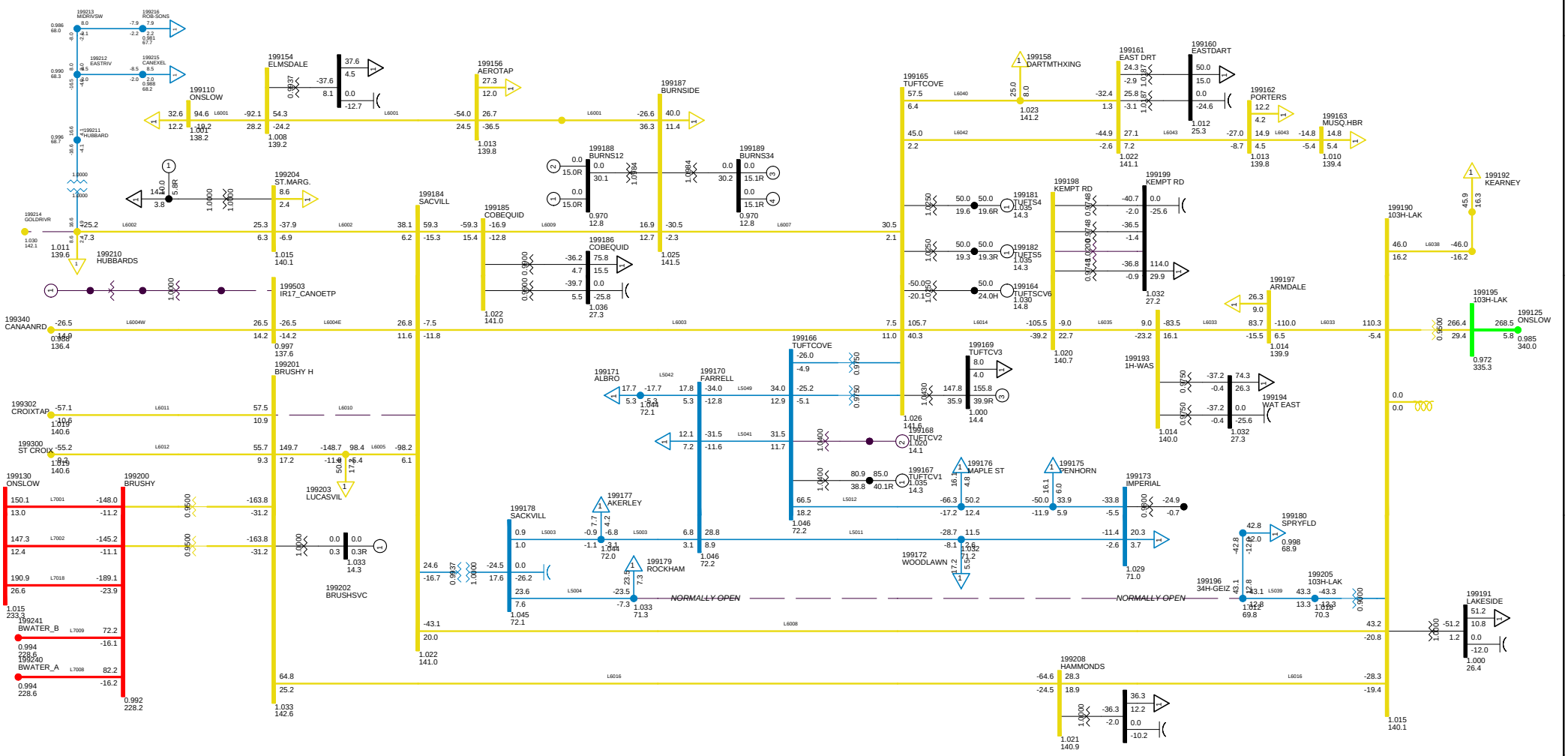

2013WP-NS-0
C28 LOSE L6010
METRO ZONE SUN, FEB 15 2009 16:07

Bus - VOLTAGE (KV/PU)
Branch - MW/MVAR
Equipment - MW/MVAR
100.0%RATE8
1.050OV 0.950UV
KV: <=30.000 <=69.000 <=138.000 <=230.000 <=345.000 >345.000

Figure __

Total Wind Gen: 290.1 MW | Gross Tupper 165.0 MW | Gross Wreck Cove 50.0 MW

Gross Lingan 648.0 MW | Gross Trenton 330.0 MW | Gross Gas Turbine 24.0 MW

Gross Pt Aconi 195.0 MW | Gross Tuft's Cove 390.8 MW | Gross Small Hydro 182.4 MW

Net Stora Load 33.7 MW | Total BMPC Load 75.5 MW

NSX -2.4 MW

CBX 731.8 MW

ONI 961.2 MW

ONS 853.2 MW

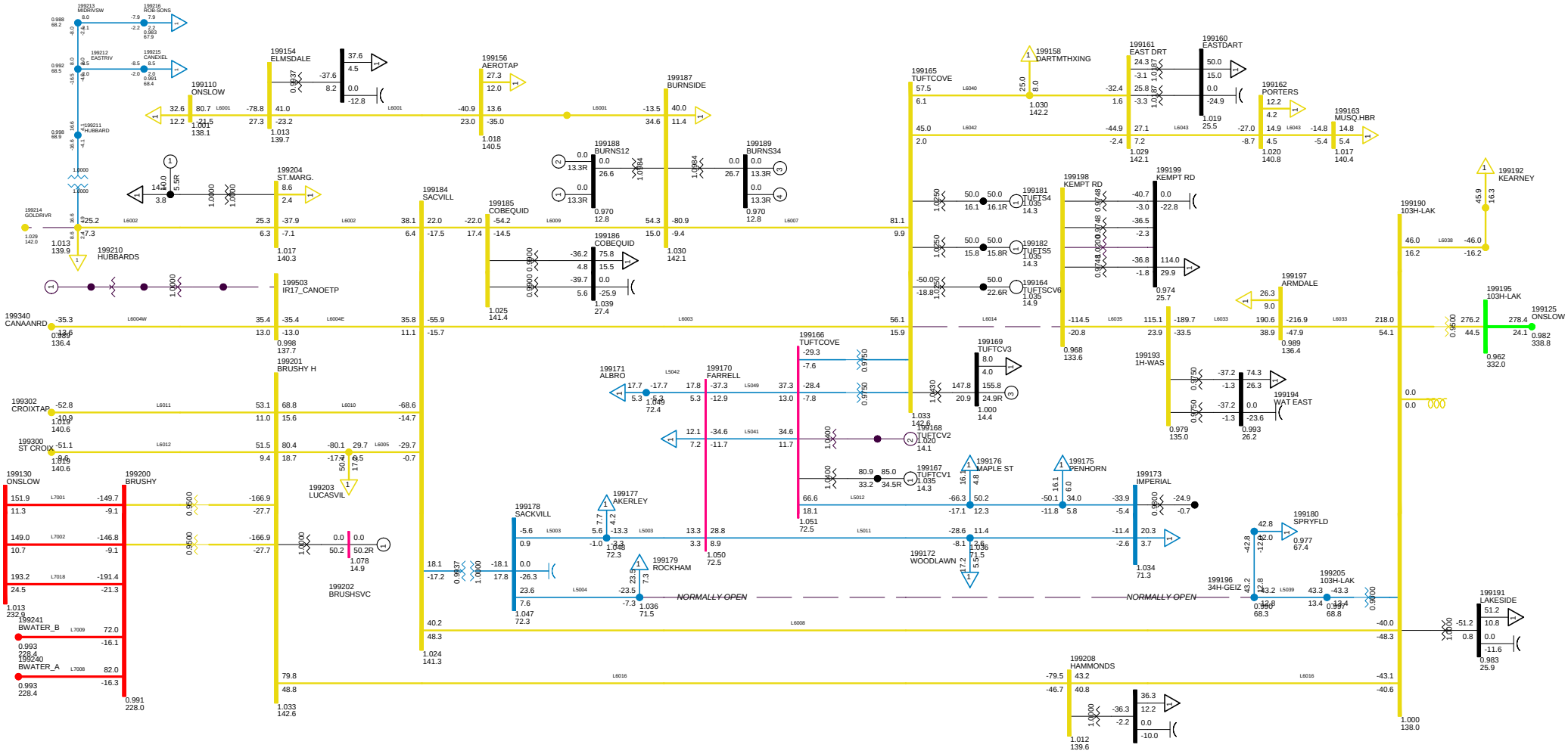

2013WP-NS-0
C29 LOSE L6014
METRO ZONE SUN, FEB 15 2009 16:07

Bus - VOLTAGE (KV/PU)
Branch - MW/MVAR
Equipment - MW/MVAR
100.0%RATE8
1.050OV 0.950UV
KV: <=30.000 <=69.000 <=138.000 <=230.000 <=345.000 >345.000

Figure __

Total Wind Gen: 290.1 MW
Gross Tupper 165.0 MW
Gross Wreck Cove 50.0 MW
Gross Lingan 648.0 MW
Gross Trenton 330.0 MW
Gross Gas Turbine 24.0 MW
Gross Pt Aconi 195.0 MW
Gross Tuft's Cove 390.8 MW
Gross Small Hydro 182.4 MW
Net Stora Load 33.7 MW
Total BMPC Load 75.5 MW

NSX 37.2 MW
CBX 731.9 MW
ONI 961.3 MW
ONS 813.5 MW

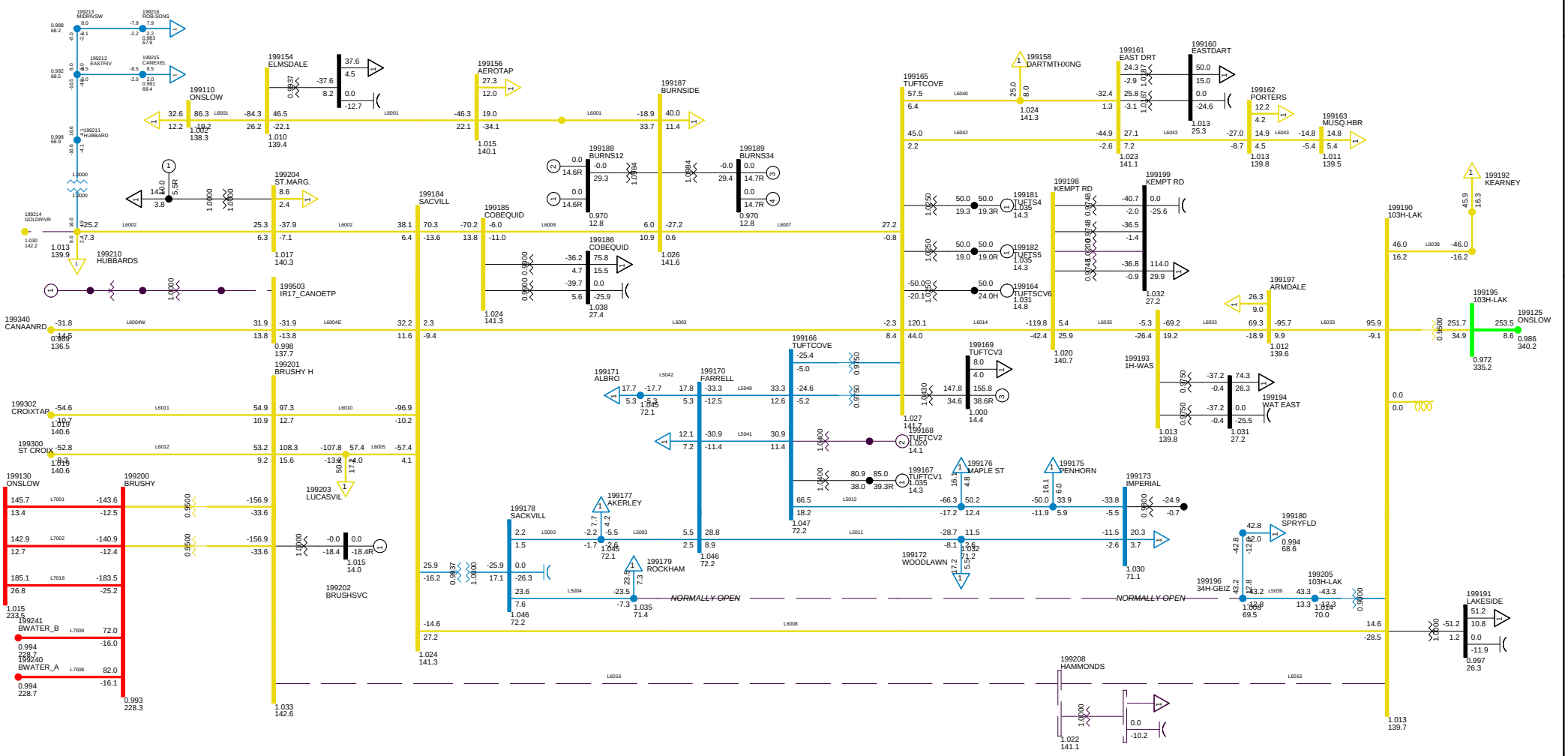

2013WP-NS-0
C30 LOSE L6016
METRO ZONE SUN, FEB 15 2009 16:07

Bus - VOLTAGE (KV/PU)
Branch - MW/MVAR
Equipment - MW/MVAR
100.0%RATE8
1.050OV 0.950UV
KV: <=30.000 <=69.000 <=138.000 <=230.000 <=345.000 >345.000

Figure __

Total Wind Gen: 290.1 MW | Gross Tupper 165.0 MW | Gross Wreck Cove 50.0 MW

Gross Lingan 648.0 MW | Gross Trenton 330.0 MW | Gross Gas Turbine 24.0 MW

Gross Pt Aconi 195.0 MW | Gross Tuft's Cove 390.8 MW | Gross Small Hydro 182.4 MW

Net Stora Load 33.7 MW | Total BMPC Load 75.5 MW

NSX 63.0 MW

CBX 731.9 MW

ONI 961.3 MW

ONS 787.7 MW

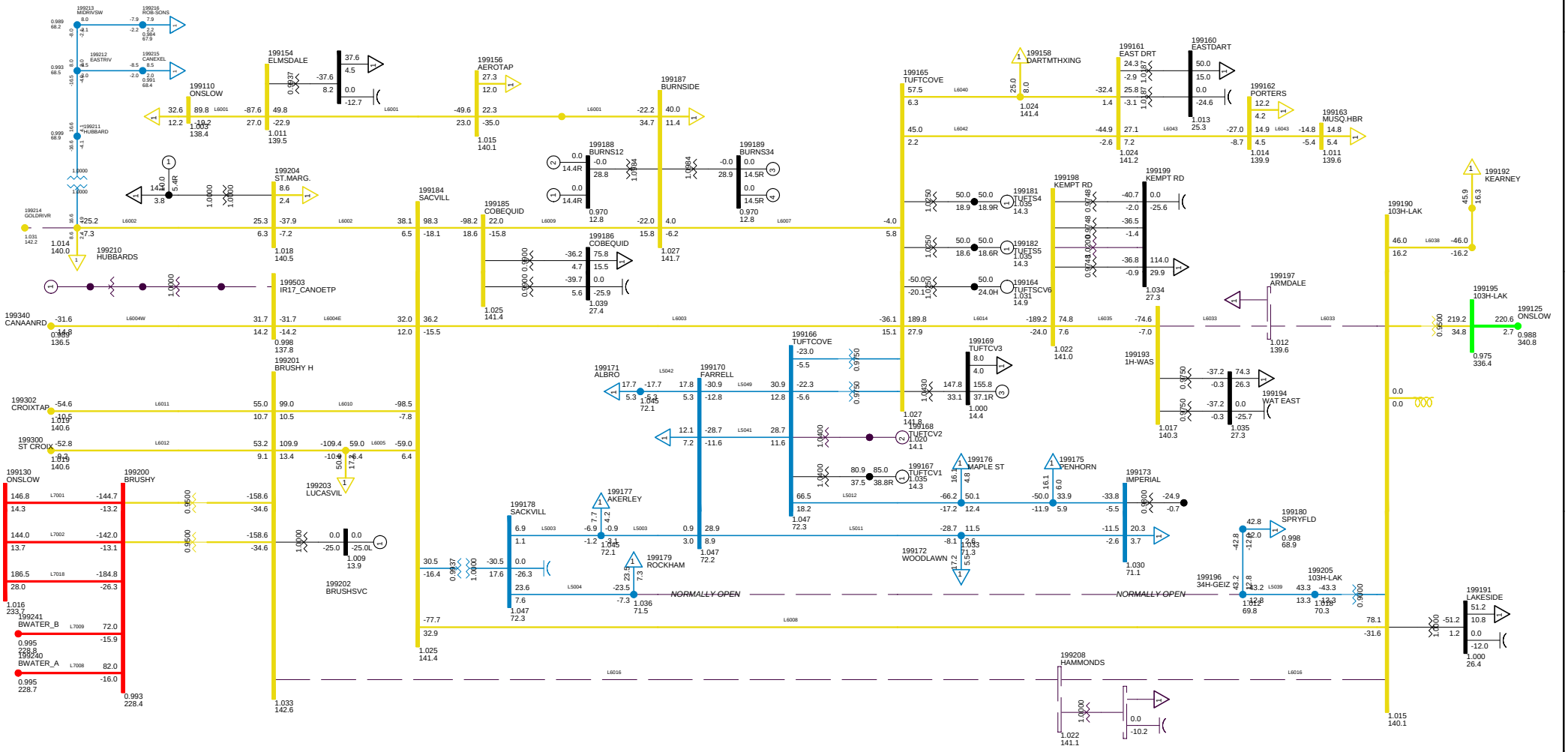

2013WP-NS-0
C31 LOSE L6033
METRO ZONE SUN, FEB 15 2009 16:07

Bus - VOLTAGE (KV/PU)
Branch - MW/MVAR
Equipment - MW/MVAR
100.0%RATE8
1.050OV 0.950UV
KV: <=30.000 <=69.000 <=138.000 <=230.000 <=345.000 >345.000

Figure __

Total Wind Gen: 290.1 MW | Gross Tupper 165.0 MW | Gross Wreck Cove 50.0 MW

Gross Lingan 648.0 MW | Gross Trenton 330.0 MW | Gross Gas Turbine 24.0 MW

Gross Pt Aconi 195.0 MW | Gross Tuft's Cove 390.8 MW | Gross Small Hydro 182.4 MW

Net Stora Load 33.7 MW | Total BMPC Load 75.5 MW

NSX 0.0 MW

CBX 731.8 MW

ONI 961.2 MW

ONS 850.7 MW

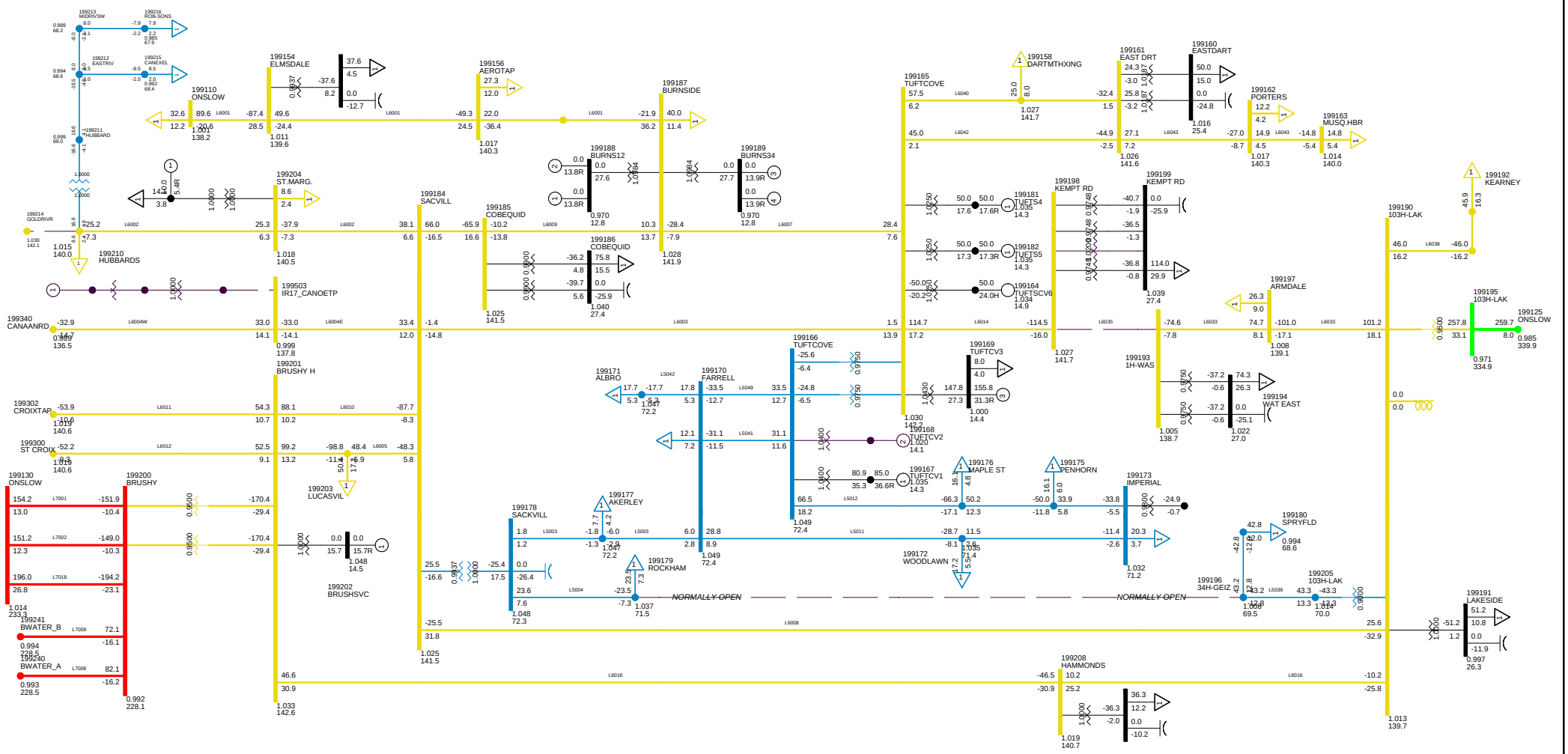

2013WP-NS-0
C32 LOSE L6035
METRO ZONE SUN, FEB 15 2009 16:07

Bus - VOLTAGE (KV/PU)
Branch - MW/MVAR
Equipment - MW/MVAR
100.0%RATE8
1.050OV 0.950UV
KV: <=30.000 <=69.000 <=138.000 <=230.000 <=345.000 >345.000

Figure __

Total Wind Gen: 290.1 MW | Gross Tupper 165.0 MW | Gross Wreck Cove 50.0 MW

Gross Lingan 648.0 MW | Gross Trenton 330.0 MW | Gross Gas Turbine 24.0 MW

Gross Pt Aconi 195.0 MW | Gross Tuft's Cove 390.8 MW | Gross Small Hydro 182.4 MW

Net Stora Load 33.7 MW | Total BMPC Load 75.5 MW

NSX 33.3 MW

CBX 731.6 MW

ONI 960.4 MW

ONS 816.4 MW

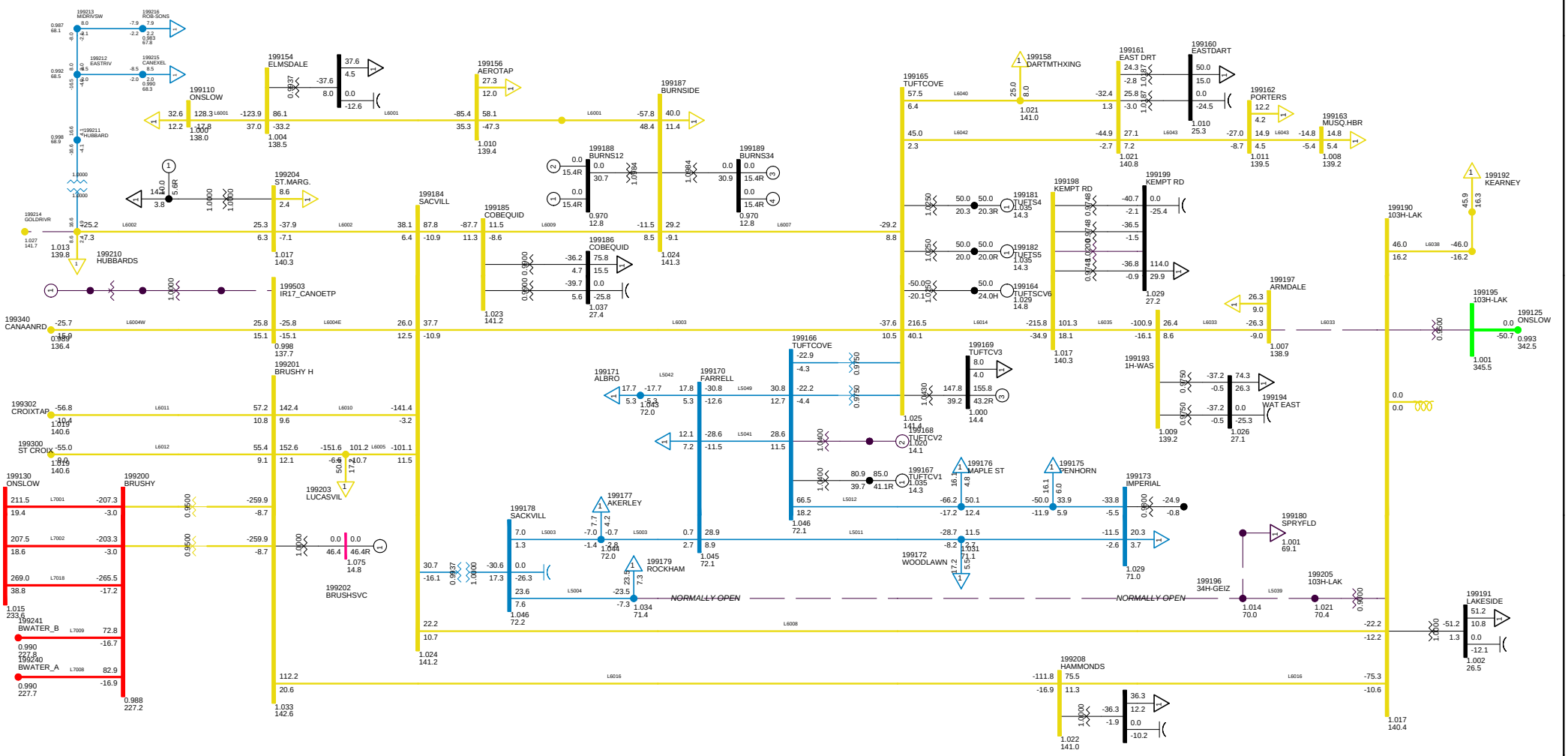

2013WP-NS-0
C33 LOSE 103H-B61
METRO ZONE SUN, FEB 15 2009 16:08

Bus - VOLTAGE (KV/PU)
Branch - MW/MVAR
Equipment - MW/MVAR
100.0%RATE8
1.050OV 0.950UV
KV: <=30.000 <=69.000 <=138.000 <=230.000 <=345.000 >345.000

Figure __

Total Wind Gen: 290.1 MW
Gross Tupper 165.0 MW
Gross Wreck Cove 50.0 MW
Gross Lingan 648.0 MW
Gross Trenton 330.0 MW
Gross Gas Turbine 24.0 MW
Gross Pt Aconi 195.0 MW
Gross Tuft's Cove 340.8 MW
Gross Small Hydro 182.4 MW
Net Stora Load 33.7 MW
Total BMPC Load 75.5 MW

NSX -12.6 MW
CBX 731.5 MW
ONI 960.4 MW
ONS 862.5 MW

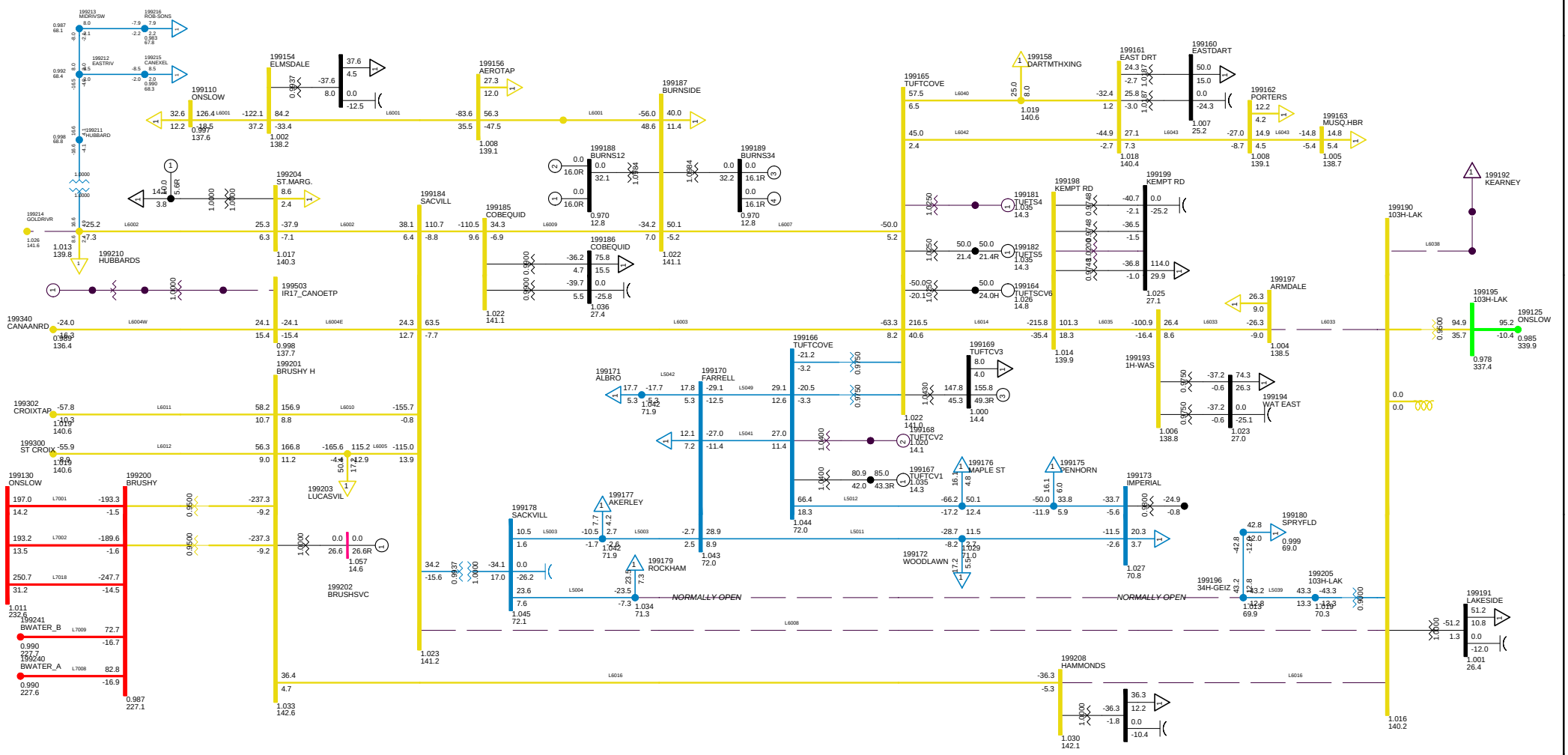

2013WP-NS-0
C34 LOSE 103H-B62
METRO ZONE SUN, FEB 15 2009 16:08

Bus - VOLTAGE (KV/PU)
Branch - MW/MVAR
Equipment - MW/MVAR
100.0%RATE B
1.050OV 0.950UV
KV: <=30.000 <=69.000 <=138.000 <=230.000 <=345.000 >345.000

Figure __

Total Wind Gen: 290.1 MW | Gross Tupper 165.0 MW | Gross Wreck Cove 50.0 MW

Gross Lingan 648.0 MW | Gross Trenton 330.0 MW | Gross Gas Turbine 24.0 MW

Gross Pt Aconi 195.0 MW | Gross Tuft's Cove 390.8 MW | Gross Small Hydro 182.4 MW

Net Stora Load 33.7 MW | Total BMPC Load 75.5 MW

NSX 0.1 MW

CBX 731.8 MW

ONI 961.2 MW

ONS 850.7 MW

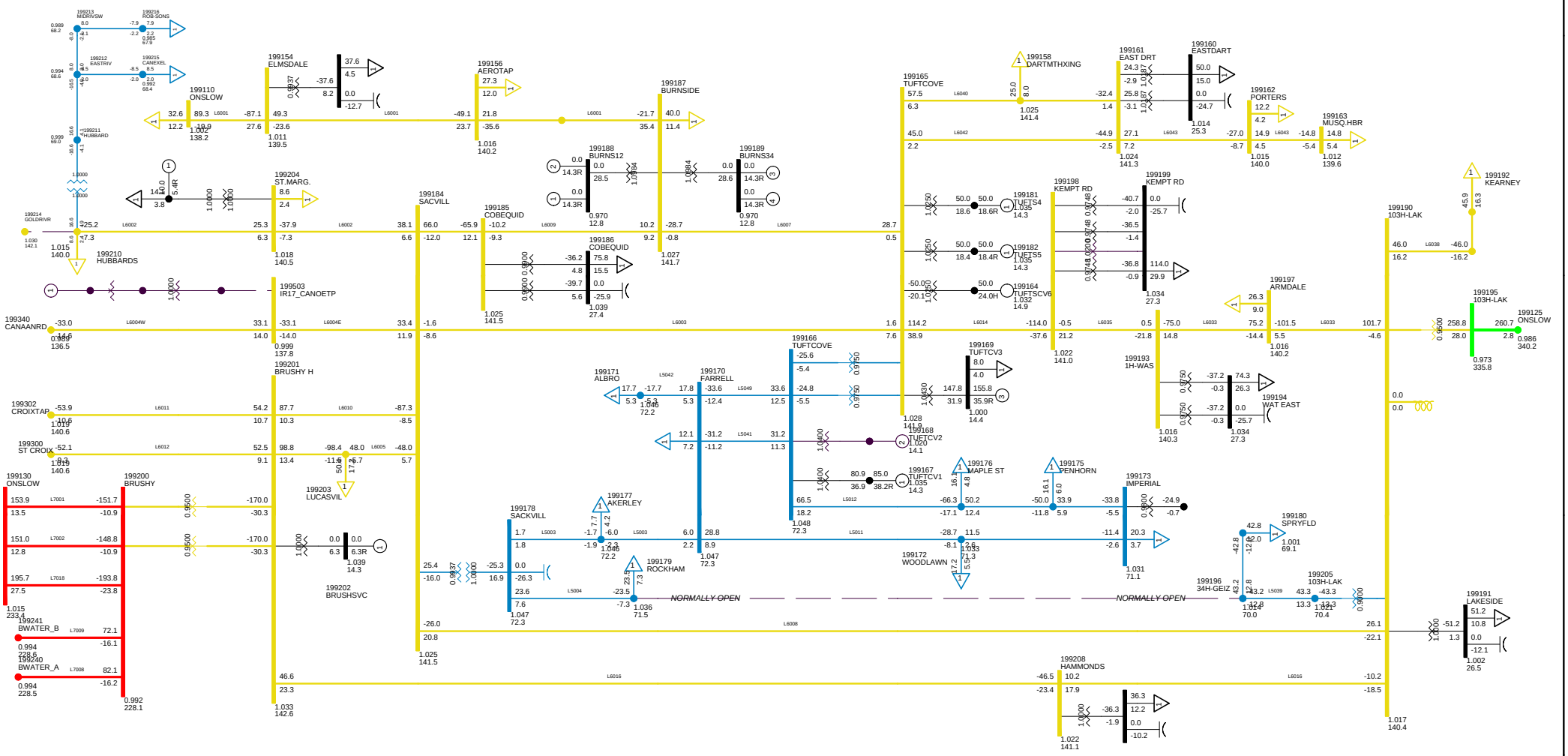

2013 WINTER PEAK STORA MIN
NS-NB=0; NB-NE=500; CBX=732; ONI=961 ONS=851
METRO ZONE SUN, FEB 15 2009 16:08

Bus - VOLTAGE (KV/PU)
Branch - MW/MVAR
Equipment - MW/MVAR
100.0%RATE8
1.050OV 0.950UV
KV: <=30.000 <=69.000 <=138.000 <=230.000 <=345.000 >345.000

Figure __

Total Wind Gen: 290.1 MW
Gross Tupper 165.0 MW
Gross Wreck Cove 50.0 MW
Gross Lingan 648.0 MW
Gross Trenton 330.0 MW
Gross Gas Turbine 24.0 MW
Gross Pt Aconi 195.0 MW
Gross Tuft's Cove 390.8 MW
Gross Small Hydro 182.4 MW
Net Stora Load 33.7 MW
Total BMPC Load 75.5 MW

NSX 50.0 MW
CBX 732.0 MW
ONI 961.4 MW
ONS 800.8 MW

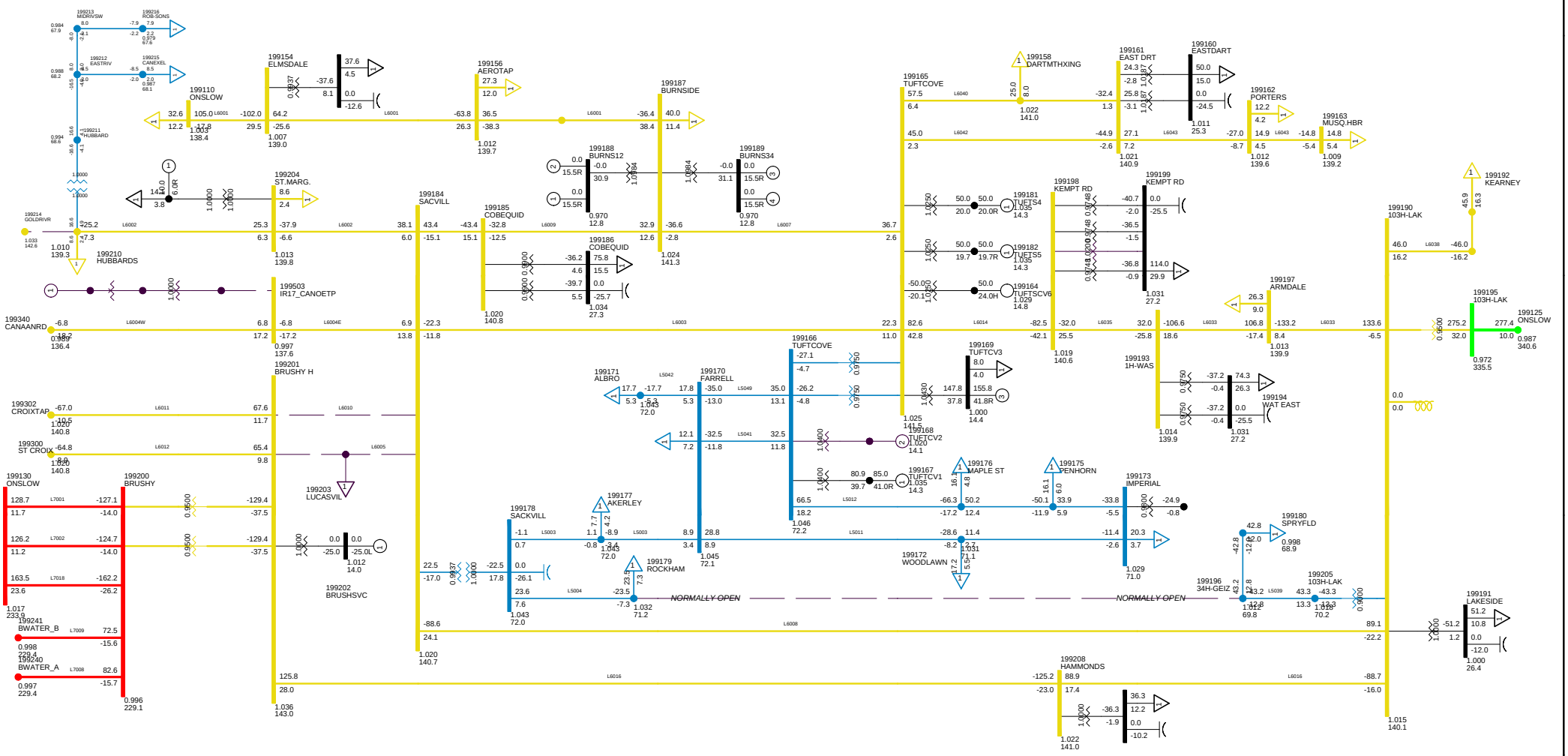

2013WP-NS-0
C35 DCT L6005+L6010
METRO ZONE SUN, FEB 15 2009 16:08

Bus - VOLTAGE (KV/PU)
Branch - MW/MVAR
Equipment - MW/MVAR
100.0%RATE8
1.050OV 0.950UV
KV: <=30.000 <=69.000 <=138.000 <=230.000 <=345.000 >345.000

Figure __

Total Wind Gen: 290.1 MW | Gross Tupper 165.0 MW | Gross Wreck Cove 50.0 MW

Gross Lingan 648.0 MW | Gross Trenton 330.0 MW | Gross Gas Turbine 24.0 MW

Gross Pt Aconi 195.0 MW | Gross Tuft's Cove 390.8 MW | Gross Small Hydro 182.4 MW

Net Stora Load 33.7 MW | Total BMPC Load 75.5 MW

NSX 51.7 MW

CBX 731.9 MW

ONI 961.4 MW

ONS 799.1 MW

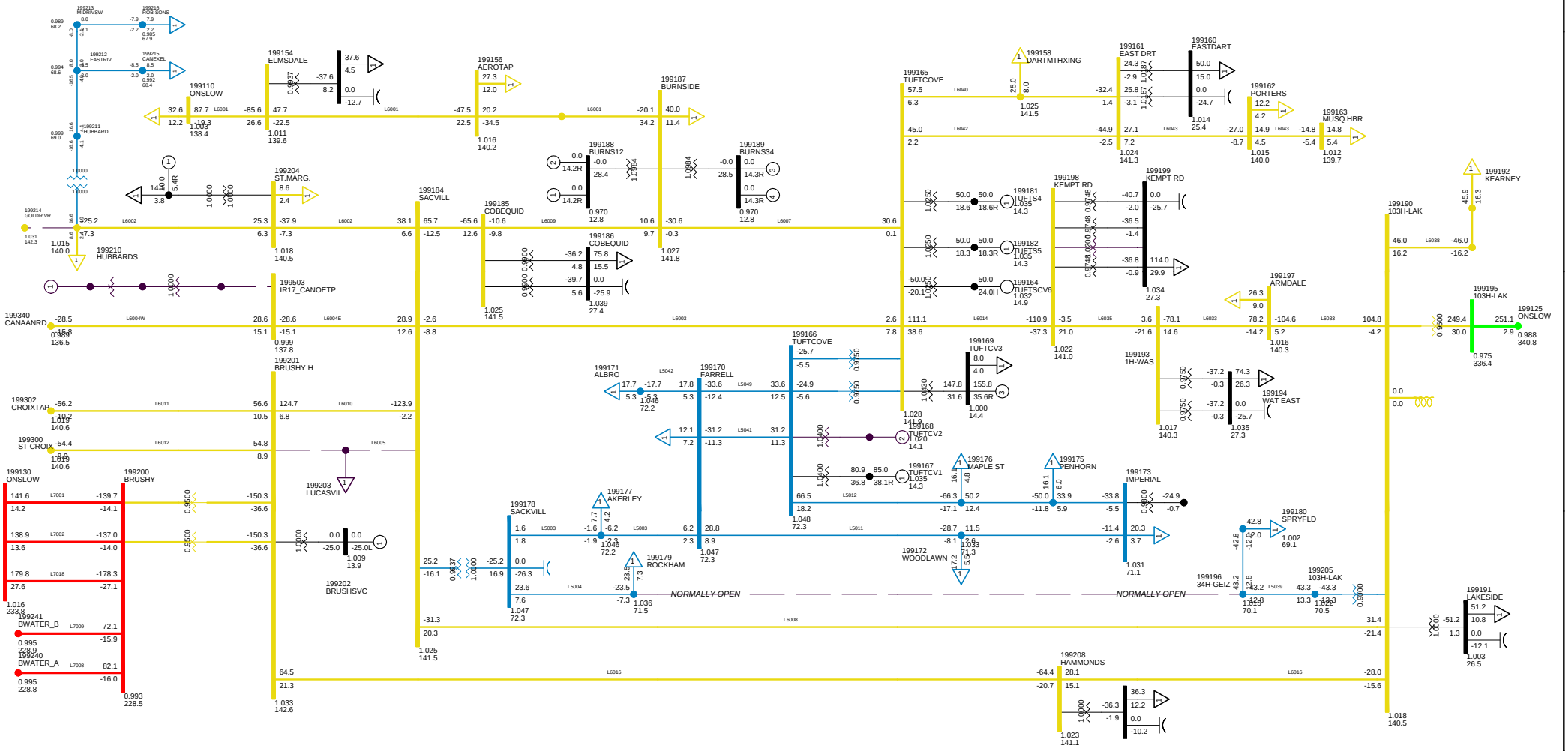

2013 WINTER PEAK STORA MIN
NS-NB=0; NB-NE=500; CBX=732; ONI=961 ONS=851
METRO ZONE SUN, FEB 15 2009 16:08

Bus - VOLTAGE (KV/PU)
Branch - MW/MVAR
Equipment - MW/MVAR
100.0%RATE8
1.050OV 0.950UV
KV: <=30.000 <=69.000 <=138.000 <=230.000 <=345.000 >345.000

Figure __

Total Wind Gen: 290.1 MW
Gross Tupper 165.0 MW
Gross Wreck Cove 50.0 MW
Gross Lingan 648.0 MW
Gross Trenton 330.0 MW
Gross Gas Turbine 24.0 MW
Gross Pt Aconi 195.0 MW
Gross Tuft's Cove 390.8 MW
Gross Small Hydro 182.4 MW
Net Stora Load 33.7 MW
Total BMPC Load 75.5 MW

NSX 88.8 MW
CBX 732.0 MW
ONI 961.6 MW
ONS 762.0 MW

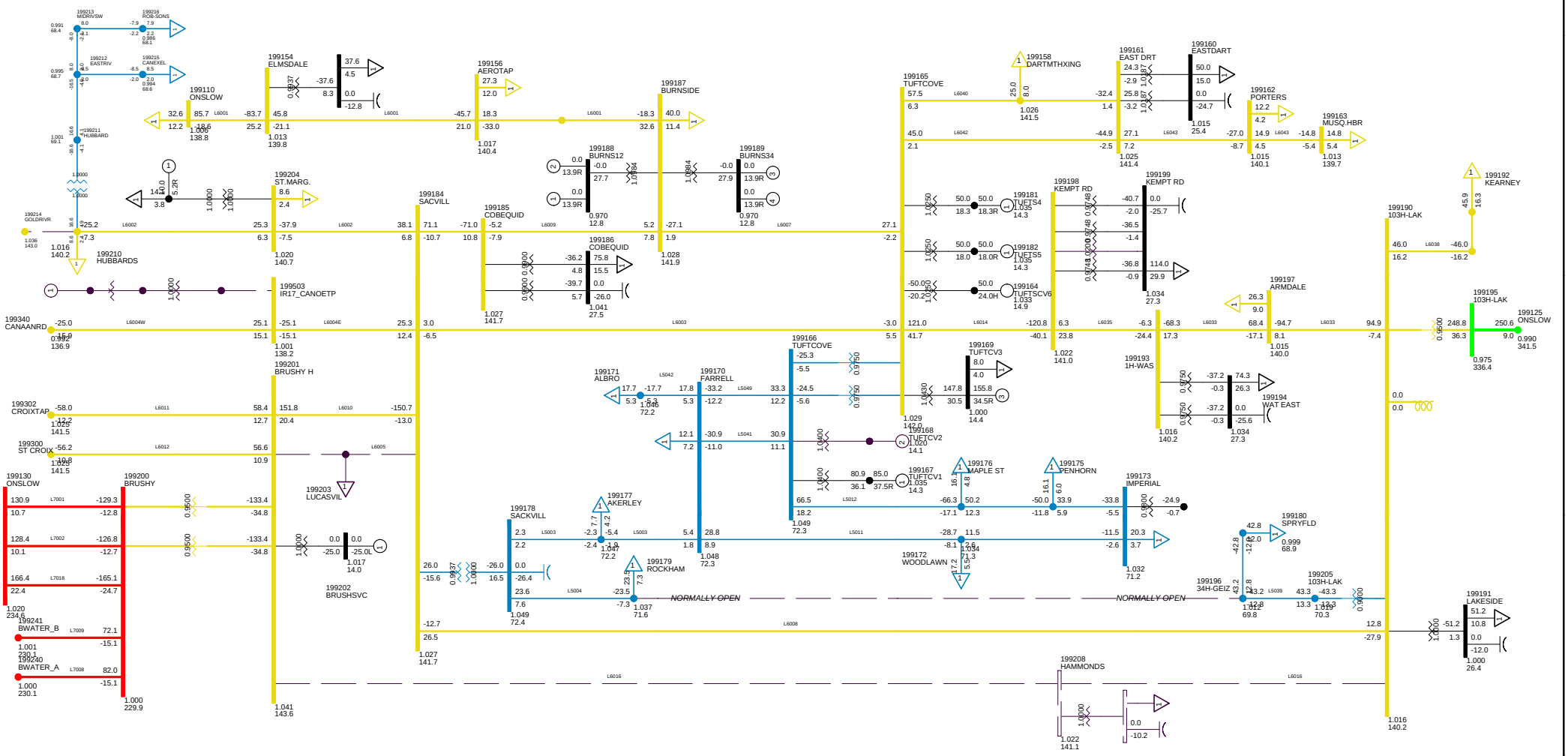

2013WP-NS-0
C37 DCT L6005 L6016
METRO ZONE SUN, FEB 15 2009 16:08

Bus - VOLTAGE (KV/PU)
Branch - MW/MVAR
Equipment - MW/MVAR
100.0%RATE8
1.050OV 0.950UV
KV: <=30.000 <=69.000 <=138.000 <=230.000 <=345.000 >345.000

Figure __

Total Wind Gen: 290.1 MW | Gross Tupper 165.0 MW | Gross Wreck Cove 50.0 MW

Gross Lingan 648.0 MW | Gross Trenton 330.0 MW | Gross Gas Turbine 24.0 MW

Gross Pt Aconi 195.0 MW | Gross Tuft's Cove 390.8 MW | Gross Small Hydro 182.4 MW

Net Stora Load 33.7 MW | Total BMPC Load 75.5 MW

NSX 78.8 MW

CBX 731.9 MW

ONI 961.4 MW

ONS 771.9 MW

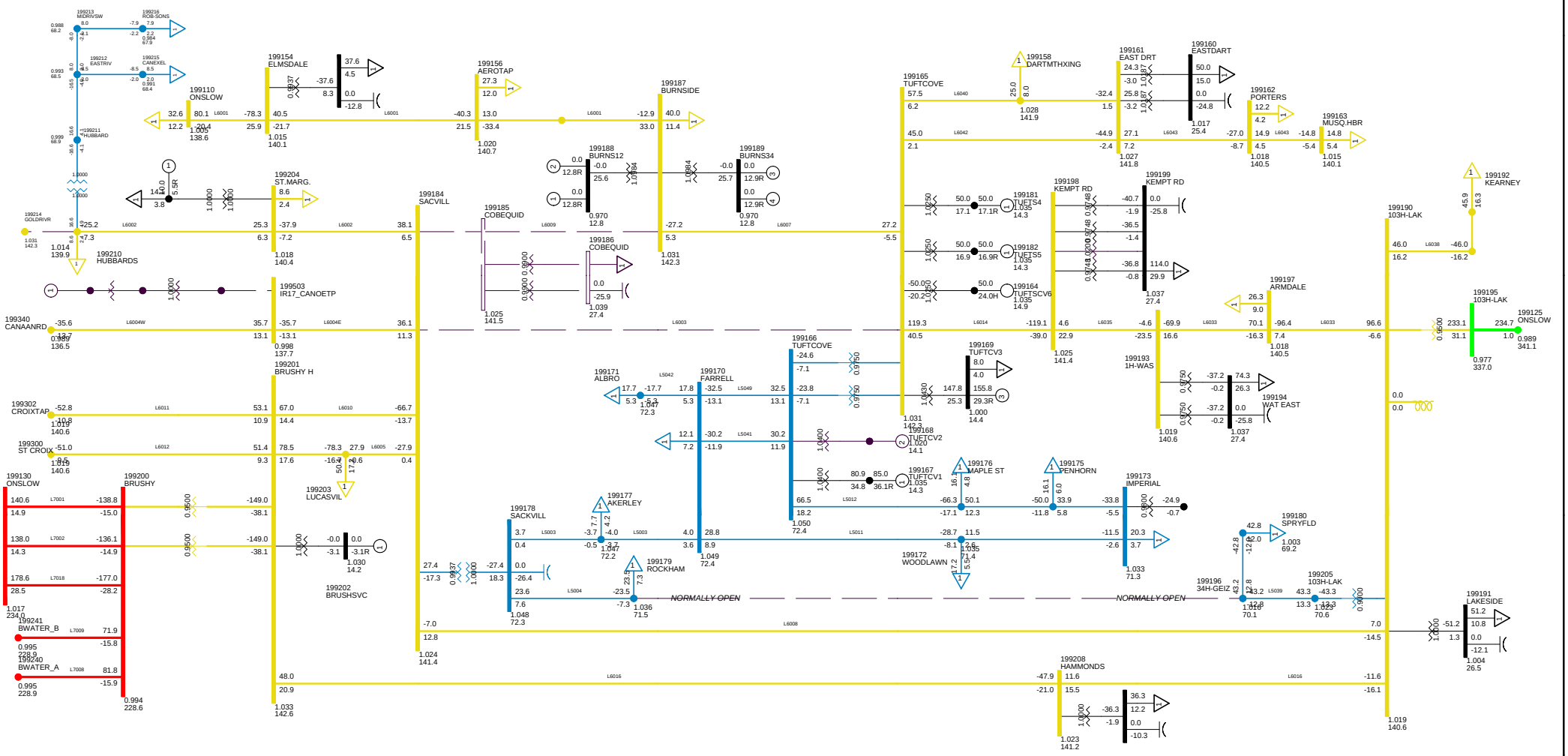

2013WP-NS-0
C38 DCT L6003 L6009
METRO ZONE SUN, FEB 15 2009 16:08

Bus - VOLTAGE (KV/PU)
Branch - MW/MVAR
Equipment - MW/MVAR
100.0%RATE8
1.050OV 0.950UV
KV: <=30.000 <=69.000 <=138.000 <=230.000 <=345.000 >345.000

Figure __

Total Wind Gen: 290.1 MW
Gross Tupper 165.0 MW
Gross Wreck Cove 50.0 MW
Gross Lingan 648.0 MW
Gross Trenton 330.0 MW
Gross Gas Turbine 24.0 MW
Gross Pt Aconi 195.0 MW
Gross Tuft's Cove 390.8 MW
Gross Small Hydro 182.4 MW
Net Stora Load 33.7 MW
Total BMPC Load 75.5 MW

NSX 0.1 MW
CBX 731.8 MW
ONI 961.2 MW
ONS 850.7 MW

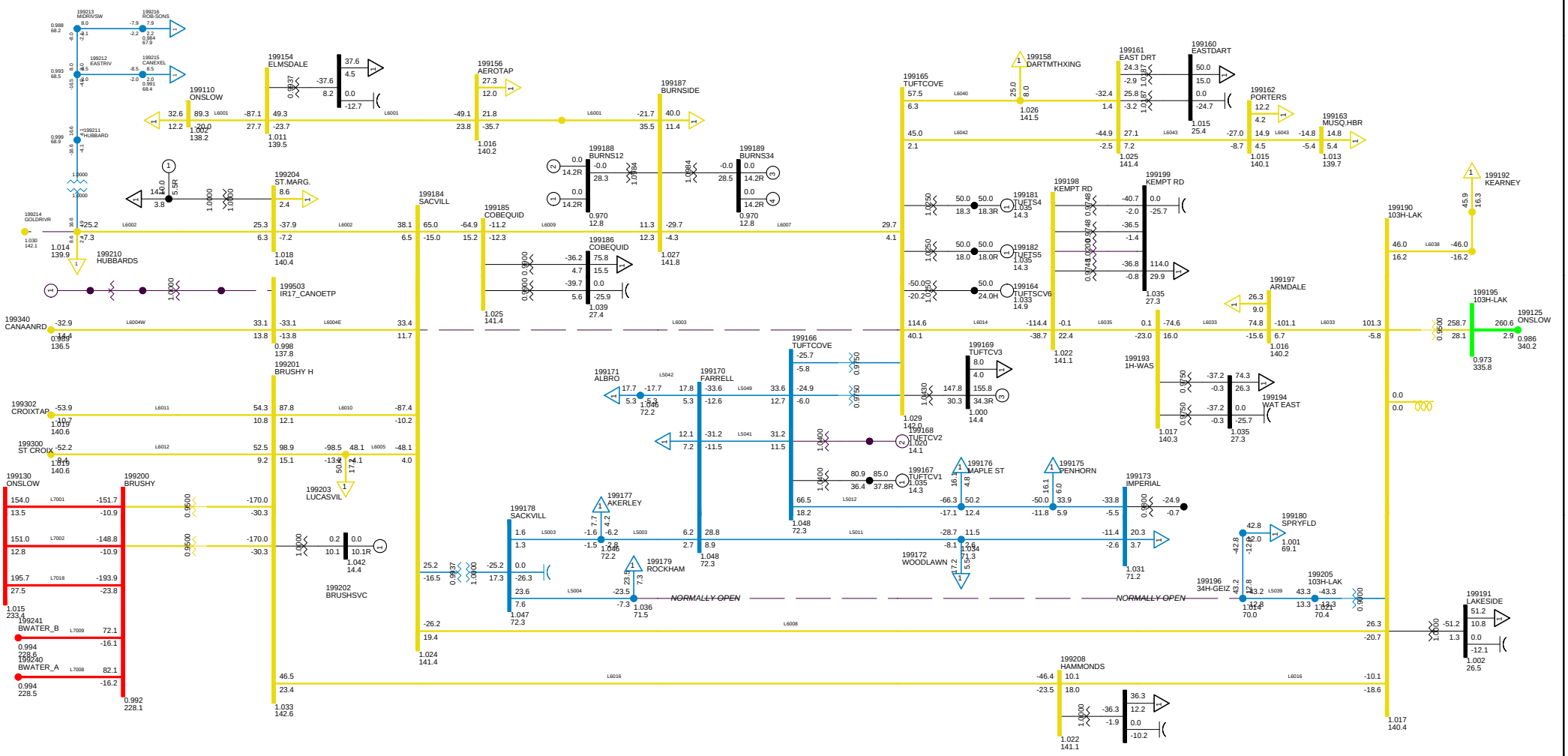

2013WP-NS-0
C39 DCT L6003 L6007
METRO ZONE SUN, FEB 15 2009 16:09

Bus - VOLTAGE (KV/PU)
Branch - MW/MVAR
Equipment - MW/MVAR
100.0%RATE8
1.050OV 0.950UV
KV: <=30.000 <=69.000 <=138.000 <=230.000 <=345.000 >345.000

Figure __

Total Wind Gen: 259.5 MW
Gross Tupper 165.0 MW
Gross Wreck Cove 50.0 MW
Gross Lingan 648.0 MW
Gross Trenton 330.0 MW
Gross Gas Turbine 0.0 MW
Gross Pt Aconi 195.0 MW
Gross Tuft's Cove 390.8 MW
Gross Small Hydro 130.4 MW
Net Stora Load 33.7 MW
Total BMPC Load 0.0 MW

NSX 168.8 MW
CBX 732.0 MW
ONI 961.6 MW
ONS 681.6 MW

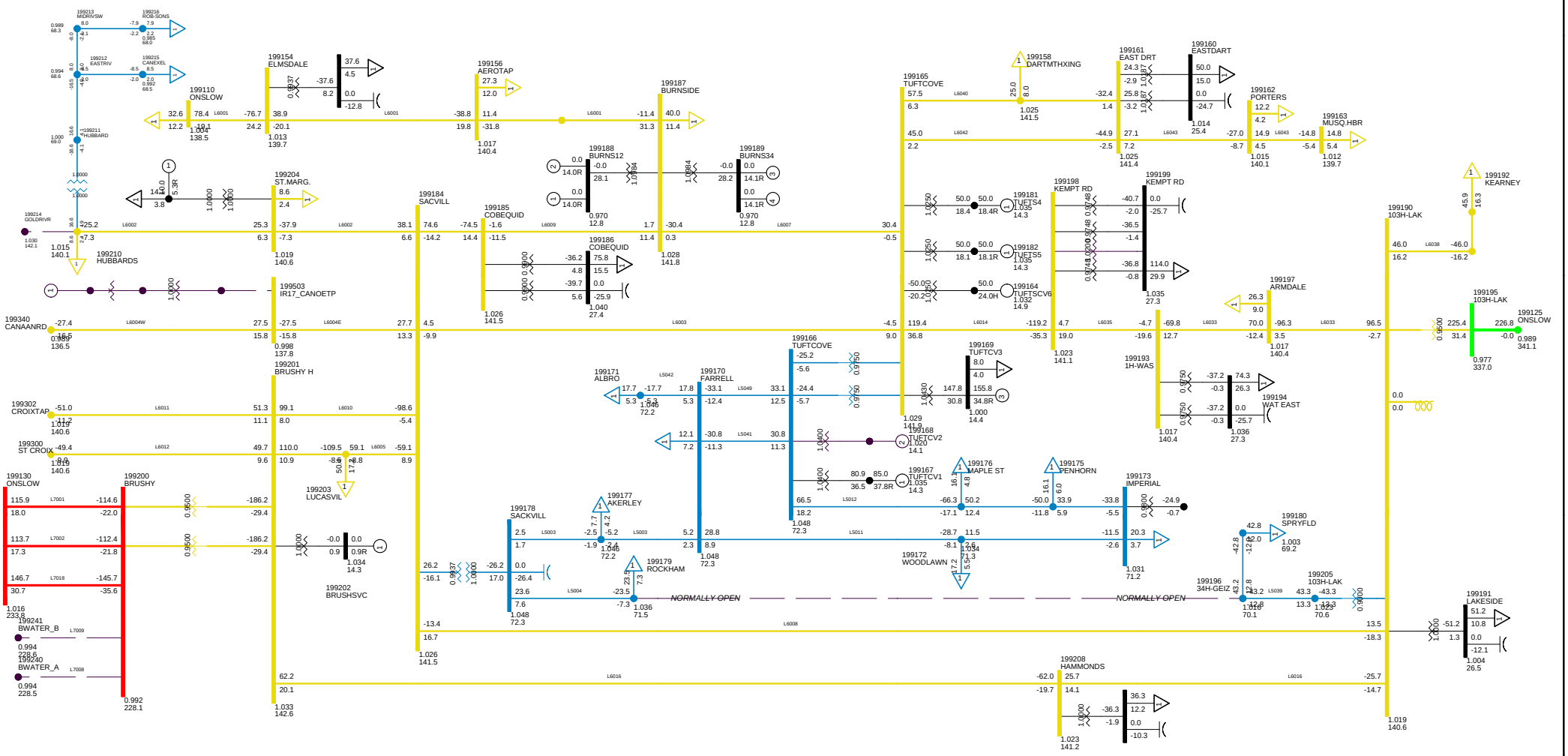

2013WP-NS-0
C40 DCT L7008 L7009 ISOLATES WEST
METRO ZONE SUN, FEB 15 2009 16:09

Bus - VOLTAGE (KV/PU)
Branch - MW/MVAR
Equipment - MW/MVAR
100.0%RATE8
1.050OV 0.950UV
KV: <=30.000 <=69.000 <=138.000 <=230.000 <=345.000 >345.000

Figure __

Total Wind Gen: 290.1 MW
Gross Tupper 165.0 MW
Gross Wreck Cove 50.0 MW
Gross Lingan 648.0 MW
Gross Trenton 330.0 MW
Gross Gas Turbine 24.0 MW
Gross Pt Aconi 195.0 MW
Gross Tuft's Cove 390.8 MW
Gross Small Hydro 182.4 MW
Net Stora Load 33.7 MW
Total BMPC Load 75.5 MW

NSX 88.8 MW
CBX 732.0 MW
ONI 961.6 MW
ONS 762.0 MW

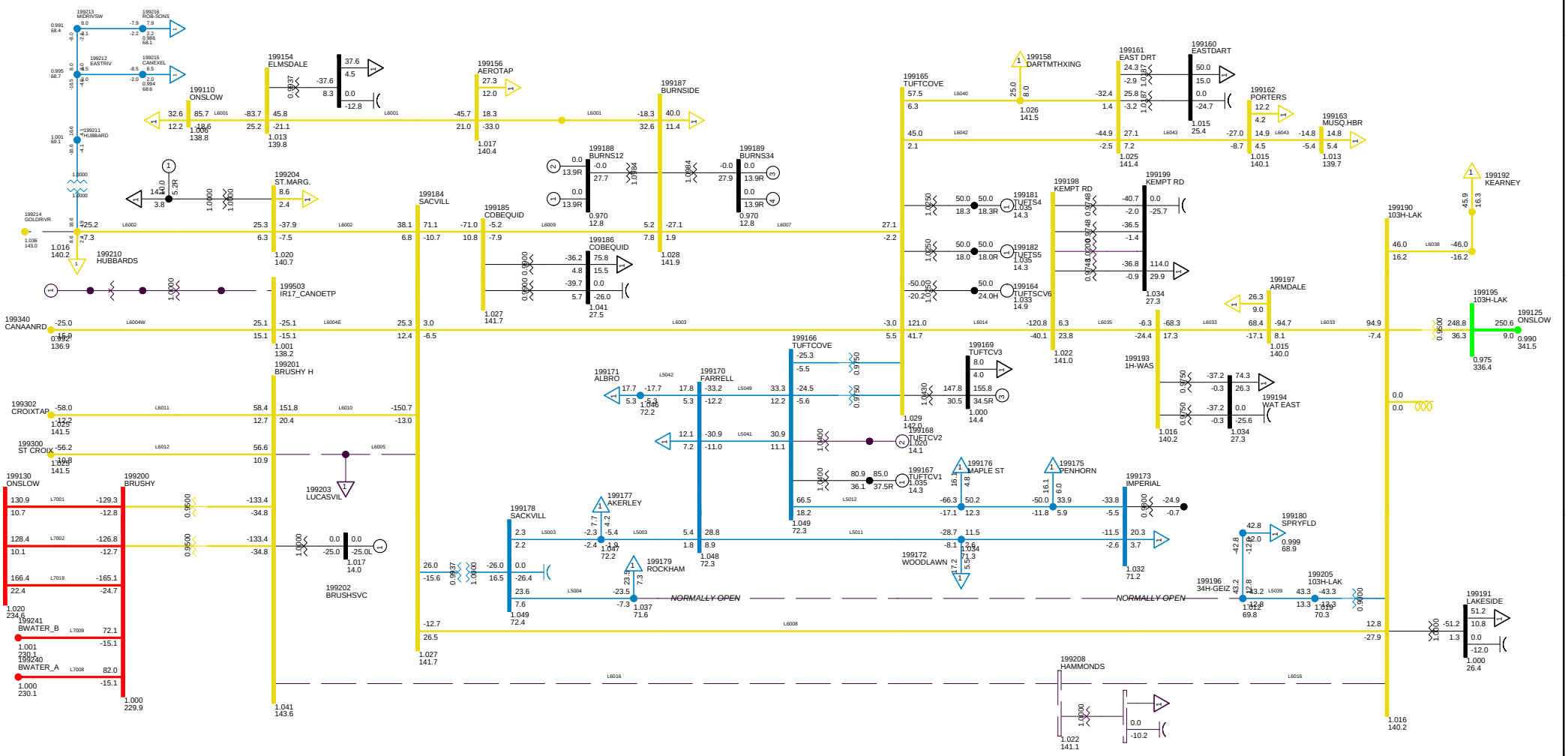

2013WP-NS-0
C41 1P FAULT ON L6016, BBU 622
METRO ZONE SUN, FEB 15 2009 16:09

Bus - VOLTAGE (KV/PU)
Branch - MW/MVAR
Equipment - MW/MVAR
100.0%RATE8
1.050OV 0.950UV
KV: <=30.000 <=69.000 <=138.000 <=230.000 <=345.000 >345.000

Figure __

Total Wind Gen: 290.1 MW
Gross Tupper 165.0 MW
Gross Wreck Cove 50.0 MW
Gross Lingan 648.0 MW
Gross Trenton 330.0 MW
Gross Gas Turbine 24.0 MW
Gross Pt Aconi 195.0 MW
Gross Tuft's Cove 390.8 MW
Gross Small Hydro 182.4 MW
Net Stora Load 33.7 MW
Total BMPC Load 75.5 MW

NSX 62.0 MW
CBX 731.6 MW
ONI 960.5 MW
ONS 787.9 MW

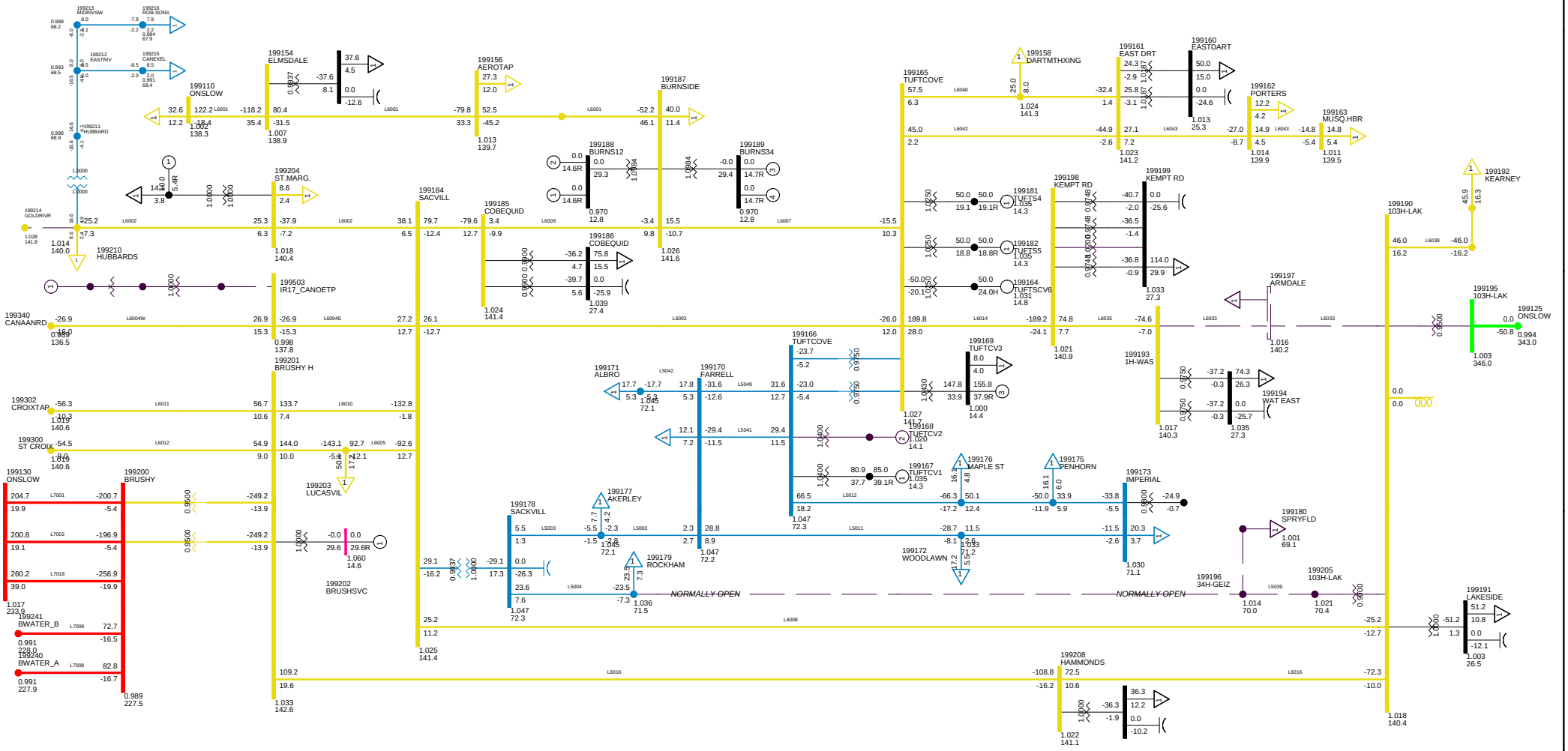

2013WP-NS-0
C42 1P L6033, BBU 103H-632
METRO ZONE SUN, FEB 15 2009 16:09

Bus - VOLTAGE (KV/PU)
Branch - MW/MVAR
Equipment - MW/MVAR
100.0%RATE8
1.050OV 0.950UV
KV: <=30.000 <=69.000 <=138.000 <=230.000 <=345.000 >345.000

Figure __

Total Wind Gen: 290.1 MW
Gross Tupper 165.0 MW
Gross Wreck Cove 50.0 MW
Gross Lingan 648.0 MW
Gross Trenton 330.0 MW
Gross Gas Turbine 24.0 MW
Gross Pt Aconi 195.0 MW
Gross Tuft's Cove 390.8 MW
Gross Small Hydro 182.4 MW
Net Stora Load 33.7 MW
Total BMPC Load 75.5 MW

NSX 50.0 MW
CBX 732.0 MW
ONI 961.4 MW
ONS 800.8 MW

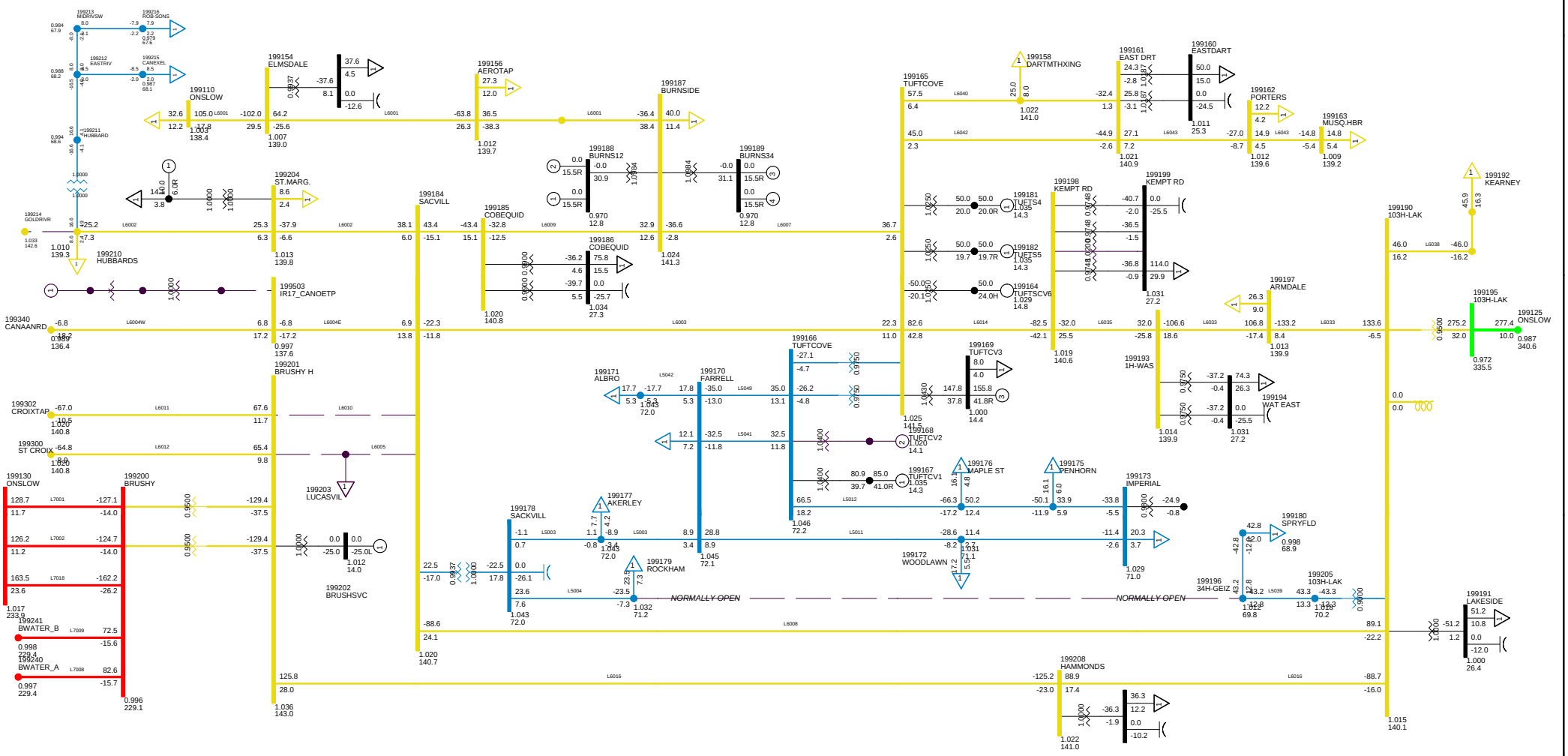

2013WP-NS-0
C43 BBU L6005 L6010 90H-608
METRO ZONE SUN, FEB 15 2009 16:09

Bus - VOLTAGE (KV/PU)
Branch - MW/MVAR
Equipment - MW/MVAR
100.0%RATE8
1.050OV 0.950UV
KV: <=30.000 <=69.000 <=138.000 <=230.000 <=345.000 >345.000

Figure __

Total Wind Gen: 290.1 MW
Gross Tupper 165.0 MW
Gross Wreck Cove 50.0 MW
Gross Lingan 648.0 MW
Gross Trenton 330.0 MW
Gross Gas Turbine 24.0 MW
Gross Pt Aconi 195.0 MW
Gross Tuft's Cove 390.8 MW
Gross Small Hydro 182.4 MW
Net Stora Load 33.7 MW
Total BMPC Load 75.5 MW

NSX 78.6 MW
CBX 731.9 MW
ONI 961.4 MW
ONS 772.0 MW

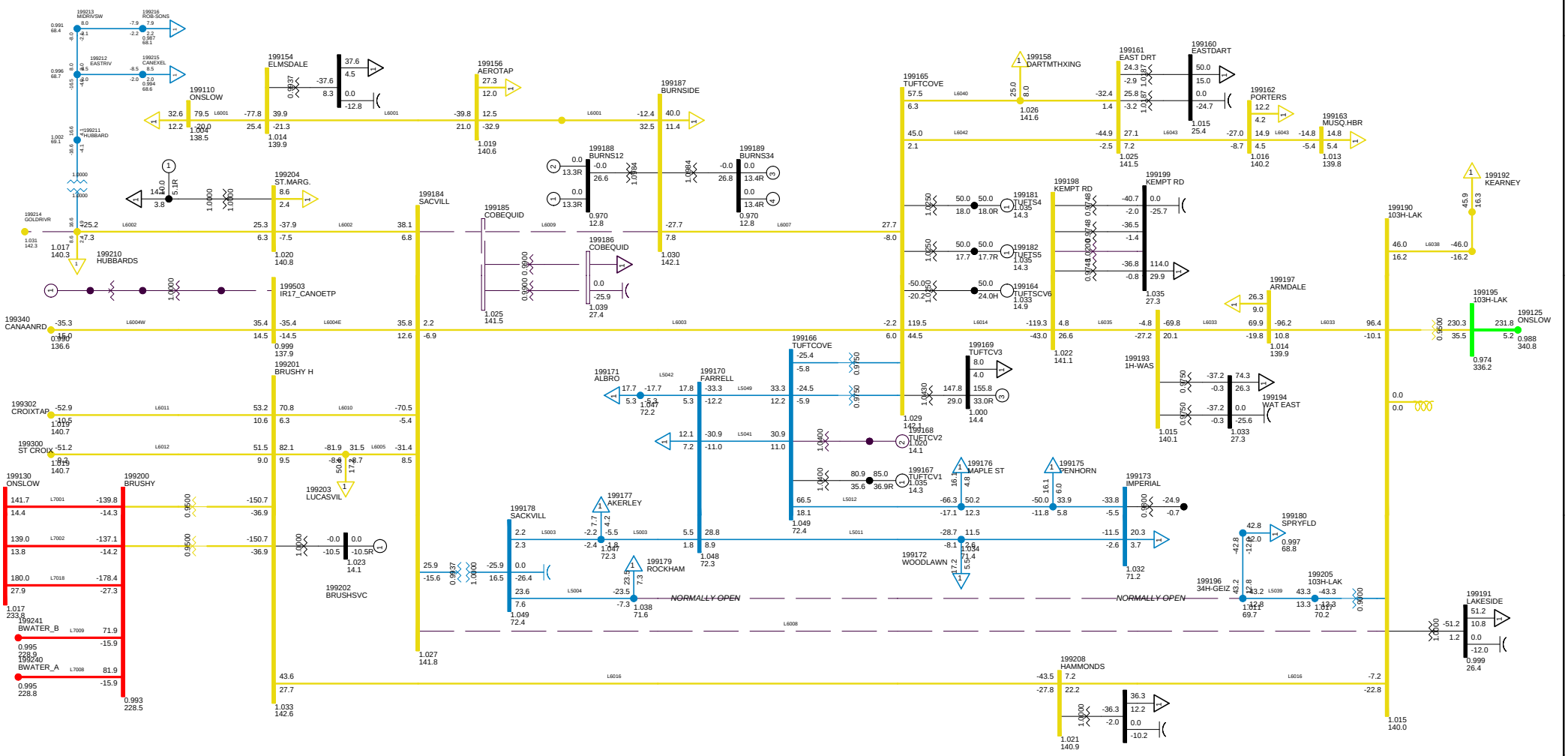

2013WP-NS-0
C44 BBU L6008 L6009 90H-611
METRO ZONE SUN, FEB 15 2009 16:09

Bus - VOLTAGE (KV/PU)
Branch - MW/MVAR
Equipment - MW/MVAR
100.0%RATE8
1.050OV 0.950UV
KV: <=30.000 <=69.000 <=138.000 <=230.000 <=345.000 >345.000

Figure __

Total Wind Gen: 290.1 MW | Gross Tupper 165.0 MW | Gross Wreck Cove 50.0 MW

Gross Lingan 648.0 MW | Gross Trenton 330.0 MW | Gross Gas Turbine 24.0 MW

Gross Pt Aconi 195.0 MW | Gross Tuft's Cove 155.8 MW | Gross Small Hydro 182.4 MW

Net Stora Load 33.7 MW | Total BMPC Load 75.5 MW

NSX -107.5 MW

CBX 731.5 MW

ONI 960.5 MW

ONS 957.6 MW

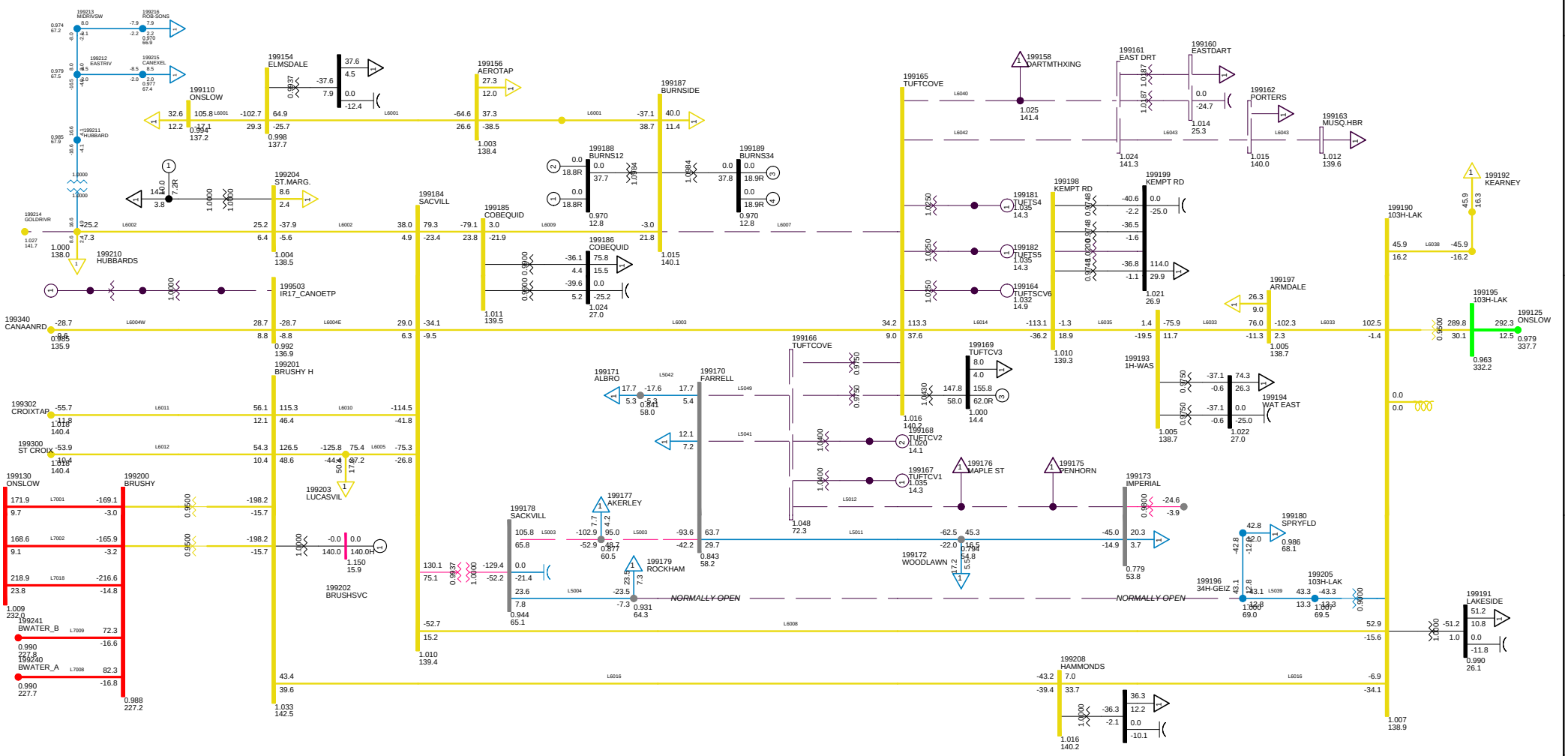

2013WP-NS-0
C45 BBU ON 91H-523
METRO ZONE SUN, FEB 15 2009 16:09

Bus - VOLTAGE (KV/PU)
Branch - MW/MVAR
Equipment - MW/MVAR
100.0%RATE8
1.050OV 0.950UV
KV: <=30.000 <=69.000 <=138.000 <=230.000 <=345.000 >345.000

Figure __

Total Wind Gen: 290.1 MW
Gross Tupper 165.0 MW
Gross Wreck Cove 50.0 MW
Gross Lingan 648.0 MW
Gross Trenton 330.0 MW
Gross Gas Turbine 24.0 MW
Gross Pt Aconi 195.0 MW
Gross Tuft's Cove 390.8 MW
Gross Small Hydro 182.4 MW
Net Stora Load 33.7 MW
Total BMPC Load 75.5 MW

NSX 119.9 MW
CBX 731.9 MW
ONI 961.5 MW
ONS 730.5 MW

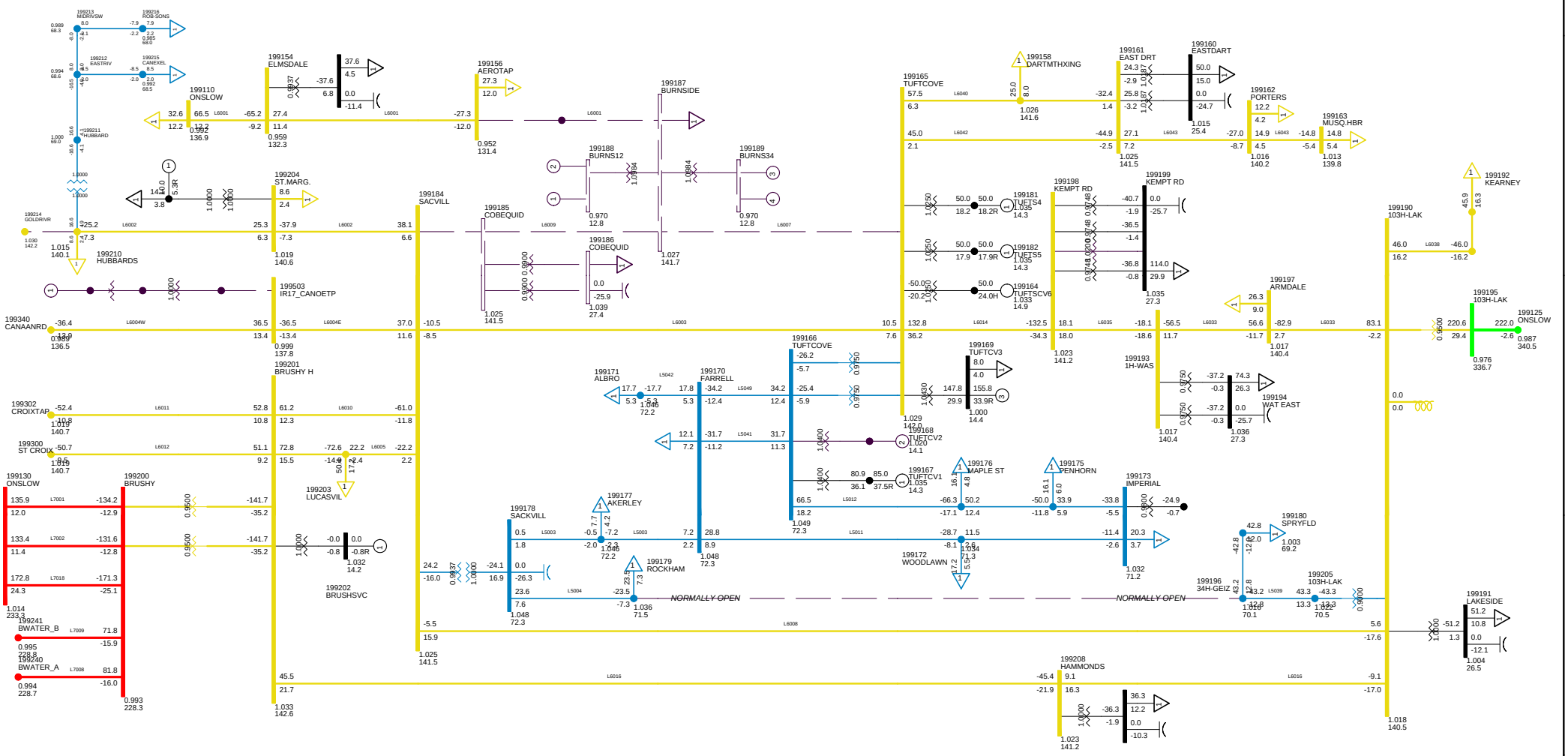

2013WP-NS-0
C46 1P L6009 BBU ON 108H 607
METRO ZONE SUN, FEB 15 2009 16:10

Bus - VOLTAGE (KV/PU)
Branch - MW/MVAR
Equipment - MW/MVAR
100.0%RATE8
1.050OV 0.950UV
KV: <=30.000 <=69.000 <=138.000 <=230.000 <=345.000 >345.000

Figure __

Total Wind Gen: 290.1 MW
Gross Tupper 165.0 MW
Gross Wreck Cove 50.0 MW
Gross Lingan 648.0 MW
Gross Trenton 330.0 MW
Gross Gas Turbine 24.0 MW
Gross Pt Aconi 195.0 MW
Gross Tuft's Cove 390.8 MW
Gross Small Hydro 182.4 MW
Net Stora Load 33.7 MW
Total BMPC Load 75.5 MW

NSX 136.1 MW
CBX 731.8 MW
ONI 960.8 MW
ONS 713.9 MW

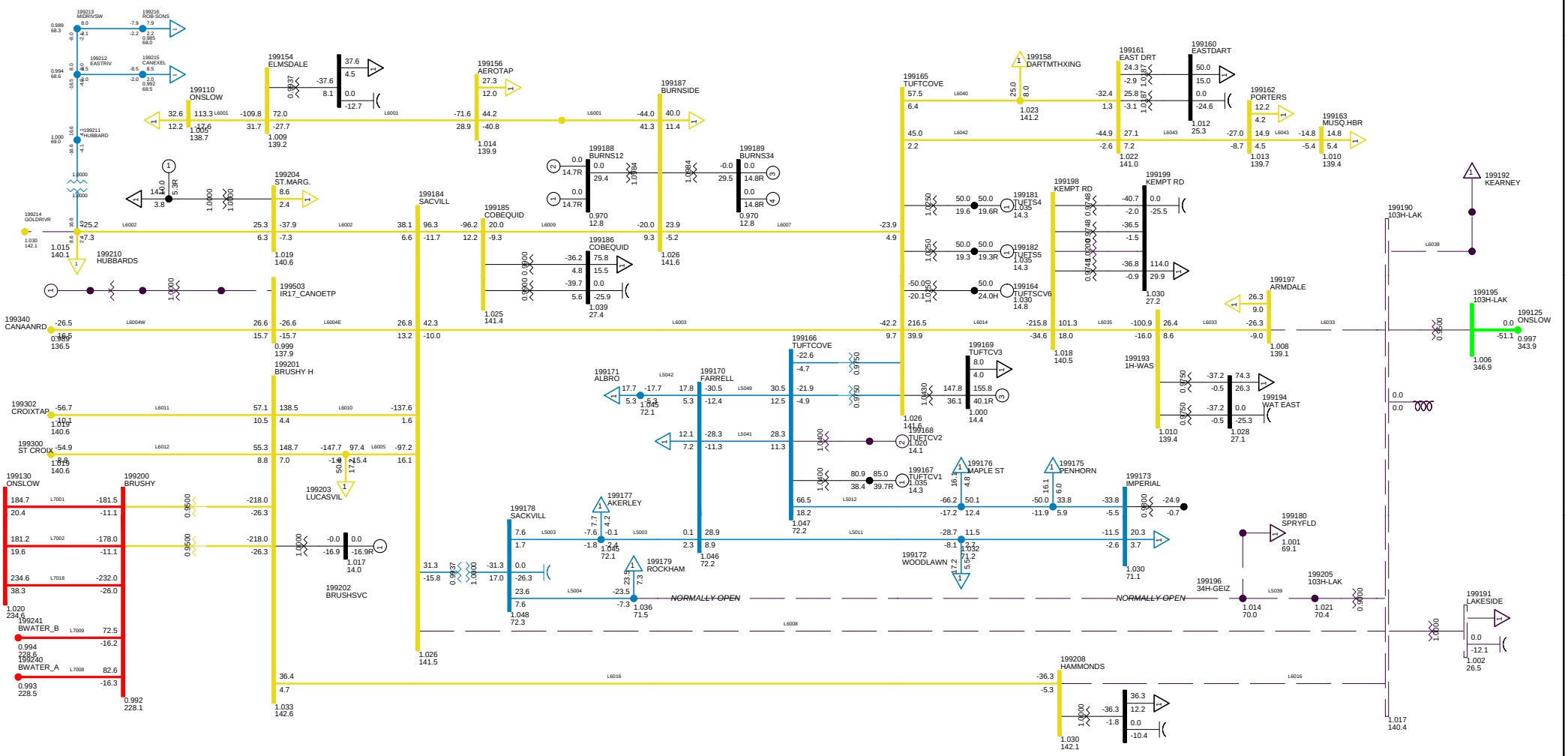

2013WP-NS-0
C47 1P 103H-600
METRO ZONE SUN, FEB 15 2009 16:10

Bus - VOLTAGE (KV/PU)
Branch - MW/MVAR
Equipment - MW/MVAR
100.0%RATE8
1.050OV 0.950UV
KV: <=30.000 <=69.000 <=138.000 <=230.000 <=345.000 >345.000

Figure __

Total Wind Gen: 290.1 MW | Gross Tupper 165.0 MW | Gross Wreck Cove 50.0 MW

Gross Lingan 648.0 MW | Gross Trenton 330.0 MW | Gross Gas Turbine 24.0 MW

Gross Pt Aconi 195.0 MW | Gross Tuft's Cove 390.8 MW | Gross Small Hydro 182.4 MW

Net Stora Load 33.7 MW | Total BMPC Load 75.5 MW

NSX 0.1 MW

CBX 731.8 MW

ONI 961.2 MW

ONS 850.7 MW

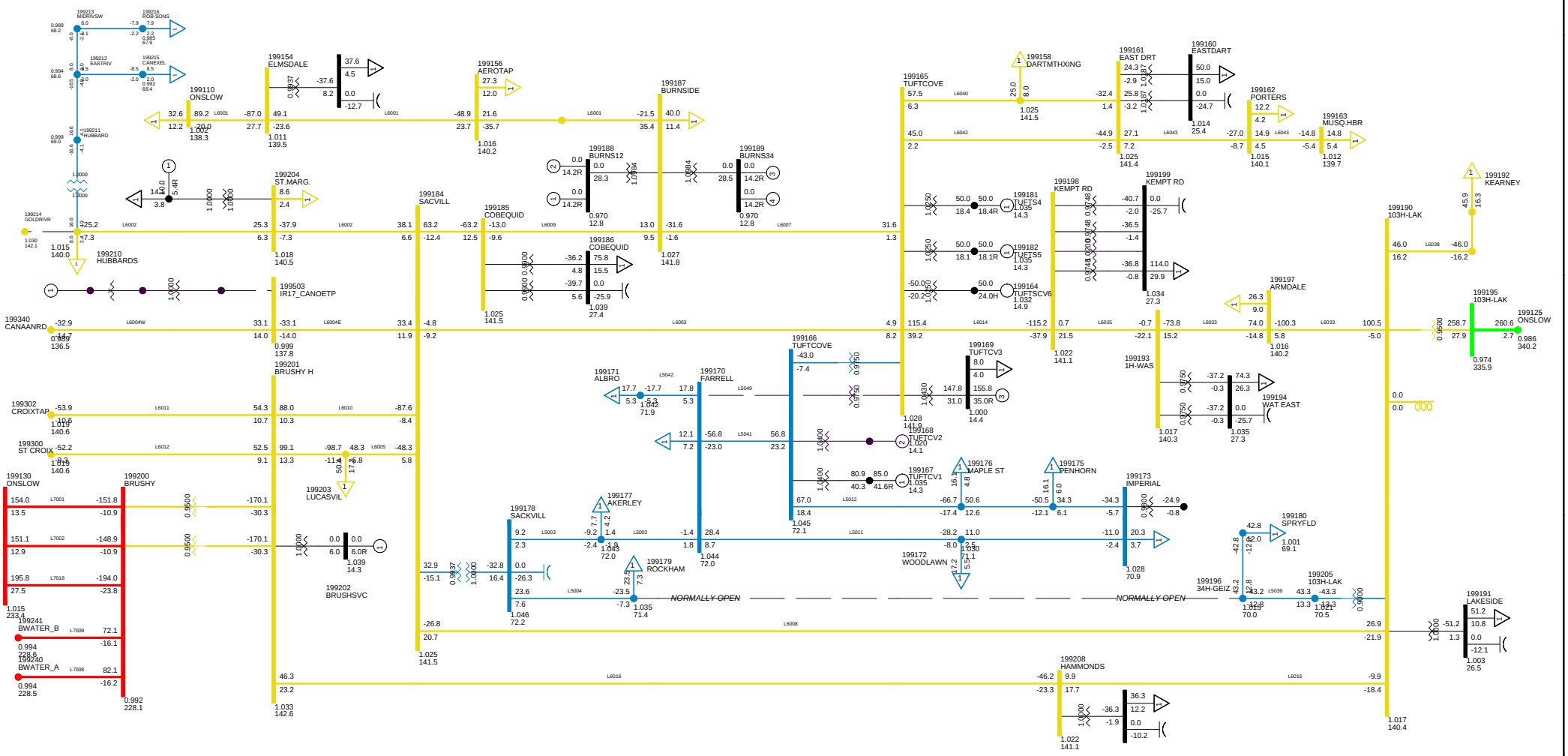

2013WP-NS-0
C48 1P ON BREAKER 91H-523
METRO ZONE SUN, FEB 15 2009 16:10

Bus - VOLTAGE (KV/PU)
Branch - MW/MVAR
Equipment - MW/MVAR
100.0%RATE8
1.050OV 0.950UV
KV: <=30.000 <=69.000 <=138.000 <=230.000 <=345.000 >345.000

Figure __

Total Wind Gen: 290.1 MW | Gross Tupper 165.0 MW | Gross Wreck Cove 50.0 MW

Gross Lingan 648.0 MW | Gross Trenton 330.0 MW | Gross Gas Turbine 24.0 MW

Gross Pt Aconi 195.0 MW | Gross Tuft's Cove 390.8 MW | Gross Small Hydro 182.4 MW

Net Stora Load 33.7 MW | Total BMPC Load 75.5 MW

NSX 117.8 MW

CBX 732.0 MW

ONI 961.5 MW

ONS 732.8 MW

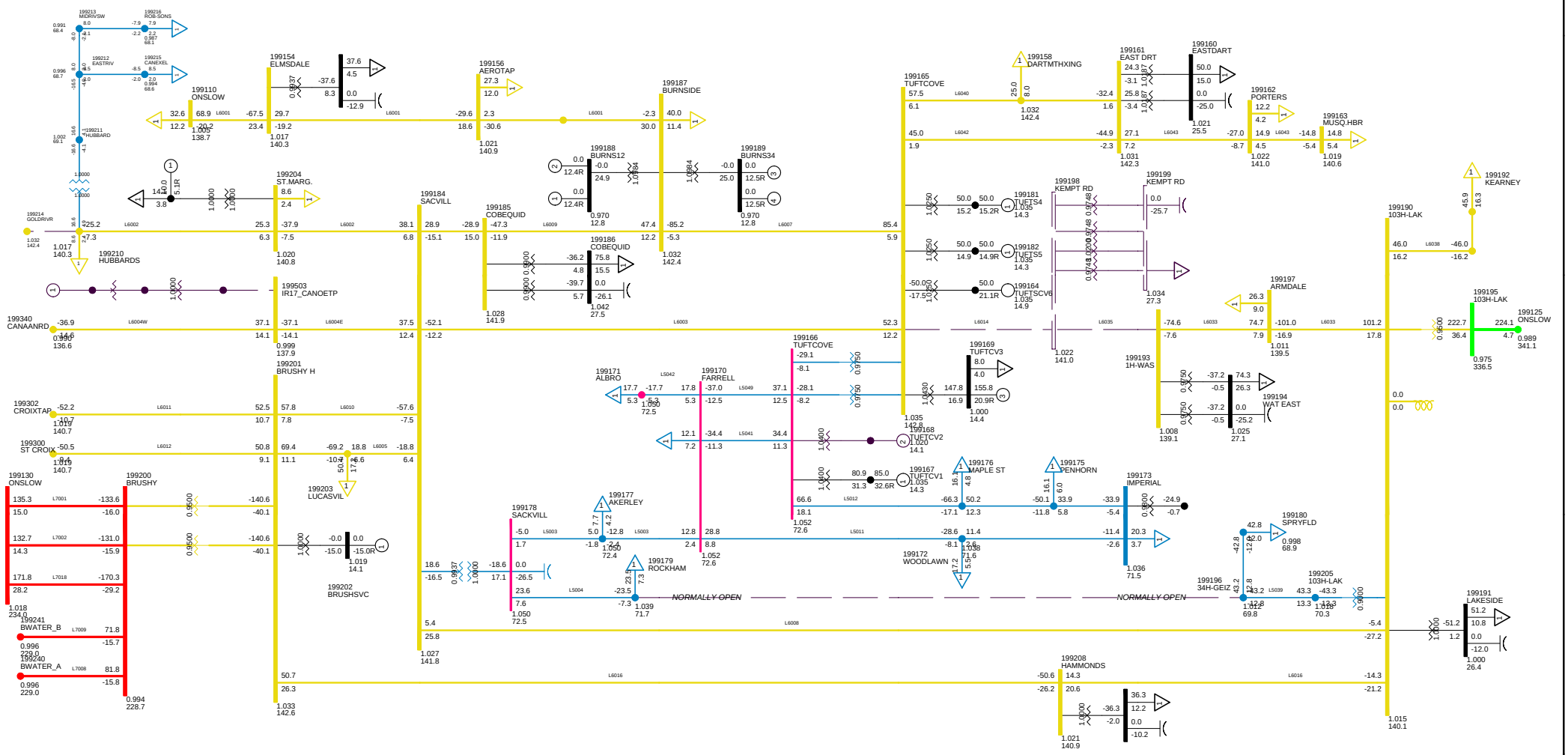

2013WP-NS-0
C49 1-PH ON 104H-600
METRO ZONE SUN, FEB 15 2009 16:10

Bus - VOLTAGE (KV/PU)
Branch - MW/MVAR
Equipment - MW/MVAR
100.0%RATE8
1.050OV 0.950UV
KV: <=30.000 <=69.000 <=138.000 <=230.000 <=345.000 >345.000

Figure __

CBX 731.8 MW

ONI 961.2 MW

ONS 850.7 MW

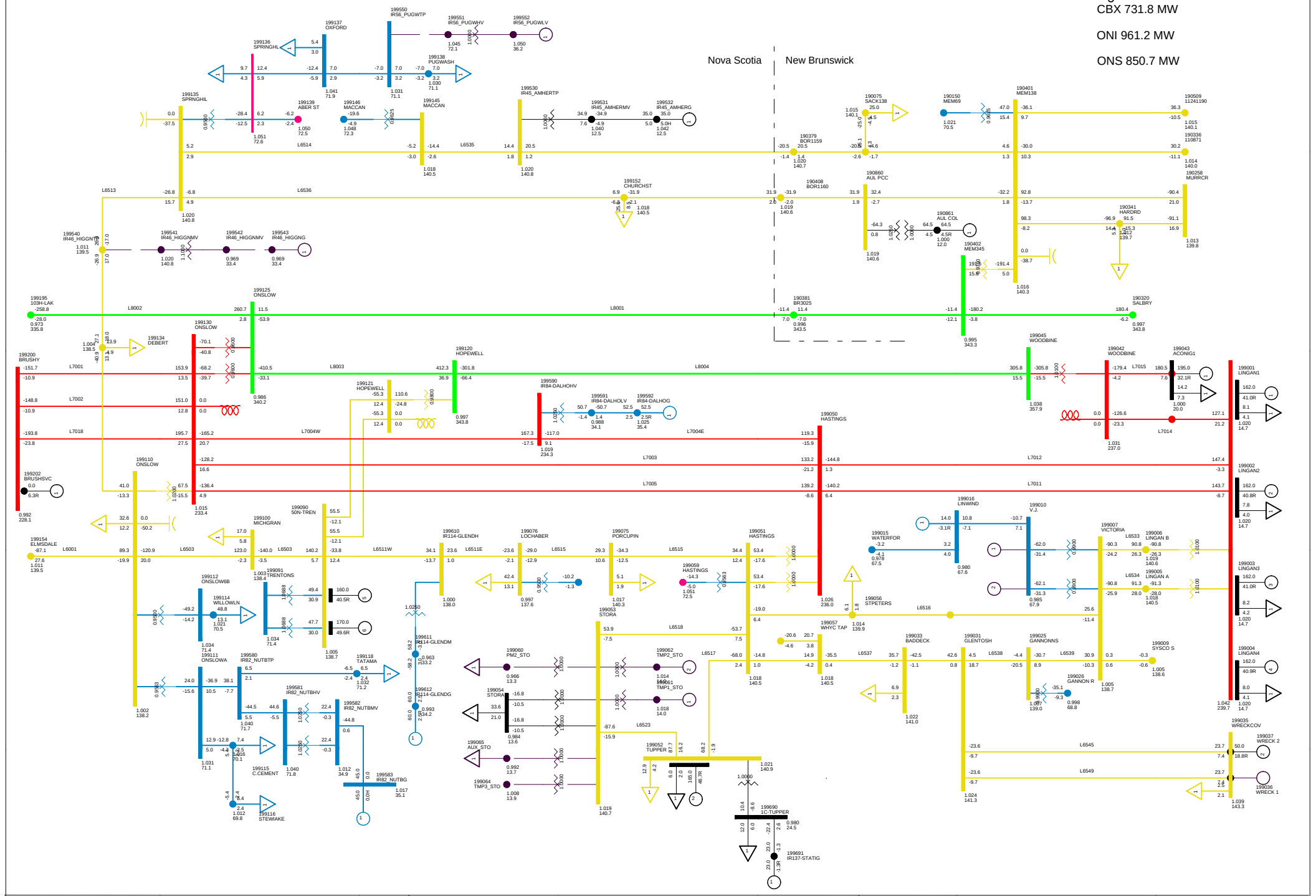

2013 WINTER PEAK STORA MIN
NS-NB=0; NB-NE=500; CBX=732; ONI=961 ONS=851
NORTHEASTERN NS SUN, FEB 15 2009 16:10

Total Wind Gen: 290.1 MW | Gross Tupper 165.0 MW | Gross Wreck Cove 50.0 MW | Net Stora Load 33.7 MW
Gross Lingan 648.0 MW | Gross Trenton 330.0 MW | Gross Gas Turbine 24.0 MW | Total BMPC Load 75.5 MW
Gross Pt Aconi 195.0 MW | Gross Tuft's Cove 390.8 MW | Gross Small Hydro 182.4 MW

Bus - VOLTAGE (KV/PU)
Branch - MW/MVAR
Equipment - MW/MVAR
110.0%RATEB
1.0500V 0.950UV
KV: <=25.000 <=69.000 <=138.000 <=230.000 <=345.000 >345.000

Figure ___

NSX -56.3 MW

CBX 708.5 MW

ONI 909.3 MW

ONS 854.4 MW

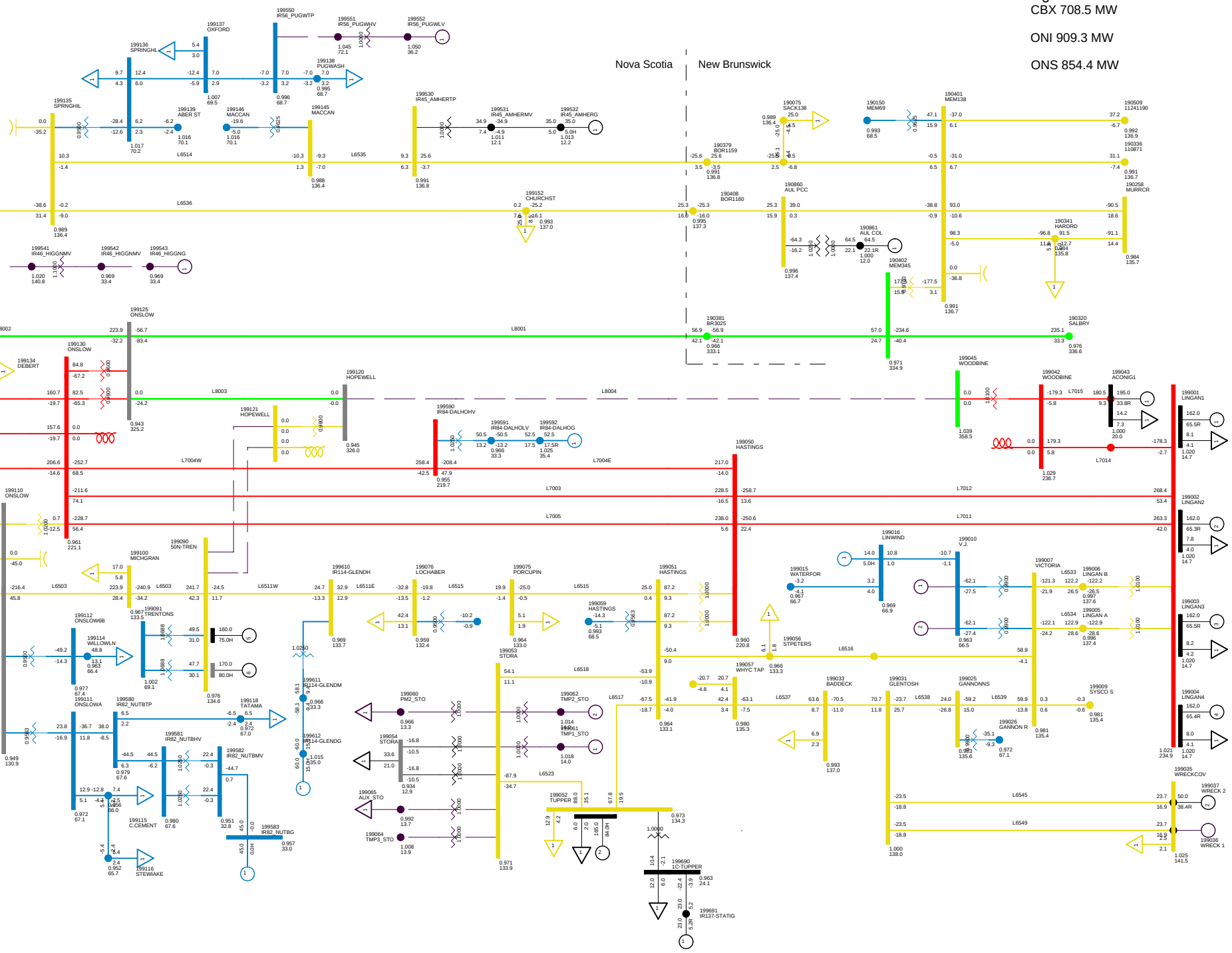

2013WP-NS-0
C50 1P FAULT ON L6507, BBU 79N-606, NO SPS
NORTHEASTERN NS SUN, FEB 15 2009 16:10

Total Wind Gen: 290.1 MW | Gross Tupper 165.0 MW | Gross Wreck Cove 50.0 MW | Net Stora Load 33.7 MW
Gross Lingan 648.0 MW | Gross Trenton 330.0 MW | Gross Gas Turbine 24.0 MW | Total BMPC Load 75.5 MW
Gross Pt Aconi 195.0 MW | Gross Tuft's Cove 390.8 MW | Gross Small Hydro 182.4 MW

Bus - VOLTAGE (KV/PU)
Branch - MW/MVAR
Equipment - MW/MVAR
110.0%RATEB
1.050OV 0.950UV
KV: <=25.000 <=69.000 <=138.000 <=230.000 <=345.000 >345.000

Figure ___

NSX -174.0 MW

CBX 572.0 MW

ONI 789.5 MW

ONS 853.1 MW

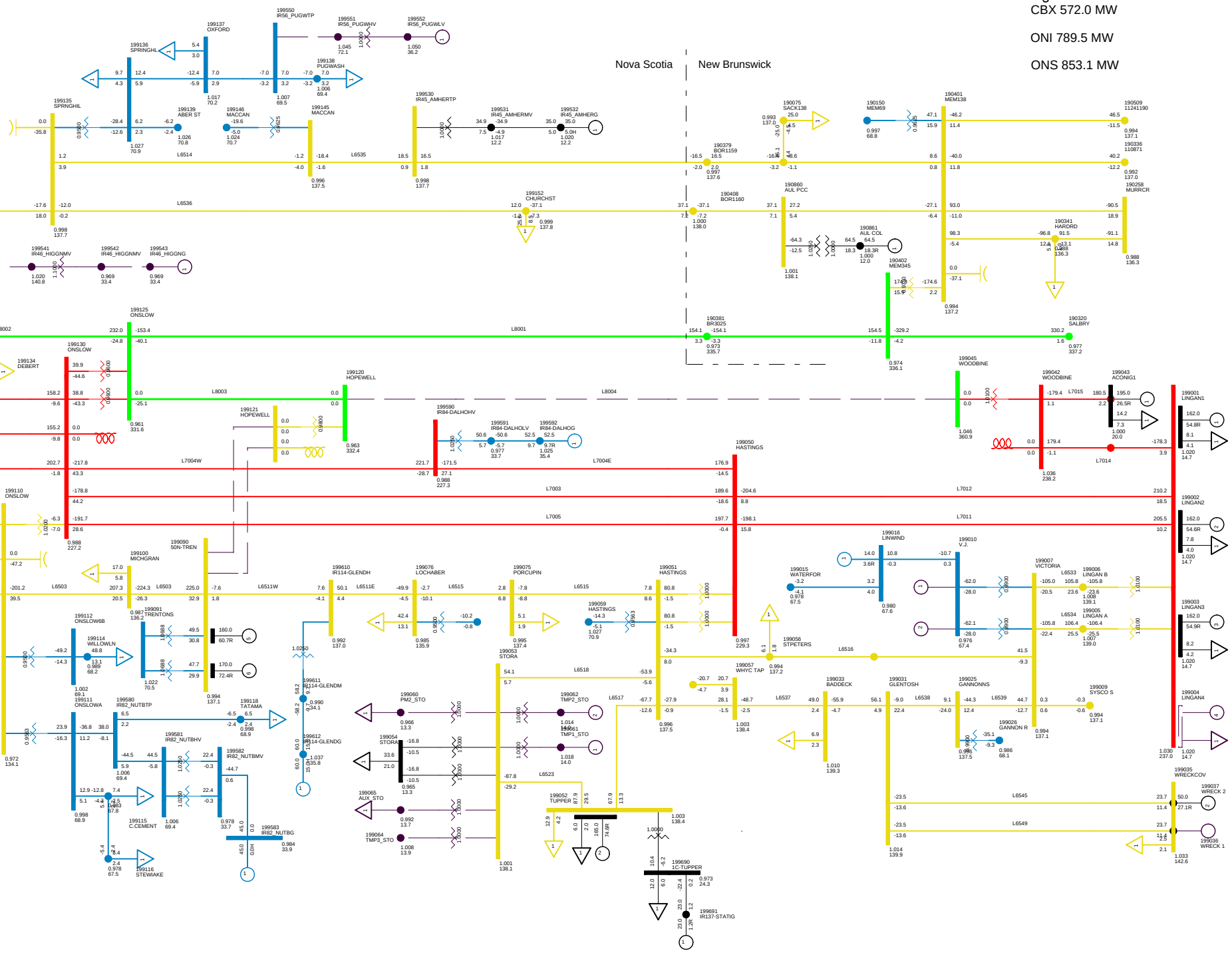

2013WP-NS-0
C50S 1P FAULT ON L6507, BBU 79N-606, 1 UNIT SPS
NORTHEASTERN NS SUN, FEB 15 2009 16:10

Total Wind Gen: 290.1 MW | Gross Tupper 165.0 MW | Gross Wreck Cove 50.0 MW | Net Stora Load 33.7 MW
Gross Lingan 486.0 MW | Gross Trenton 330.0 MW | Gross Gas Turbine 24.0 MW | Total BMPC Load 75.5 MW
Gross Pt Aconi 195.0 MW | Gross Tuft's Cove 390.8 MW | Gross Small Hydro 182.4 MW

Bus - VOLTAGE (KV/PU)
Branch - MW/MVAR
Equipment - MW/MVAR
110.0%RATEB
1.050UV 0.950UV
KV: <=25.000 <=69.000 <=138.000 <=230.000 <=345.000 >345.000

Figure ___

NSX -303.6 MW

CBX 430.2 MW

ONI 659.1 MW

ONS 852.5 MW

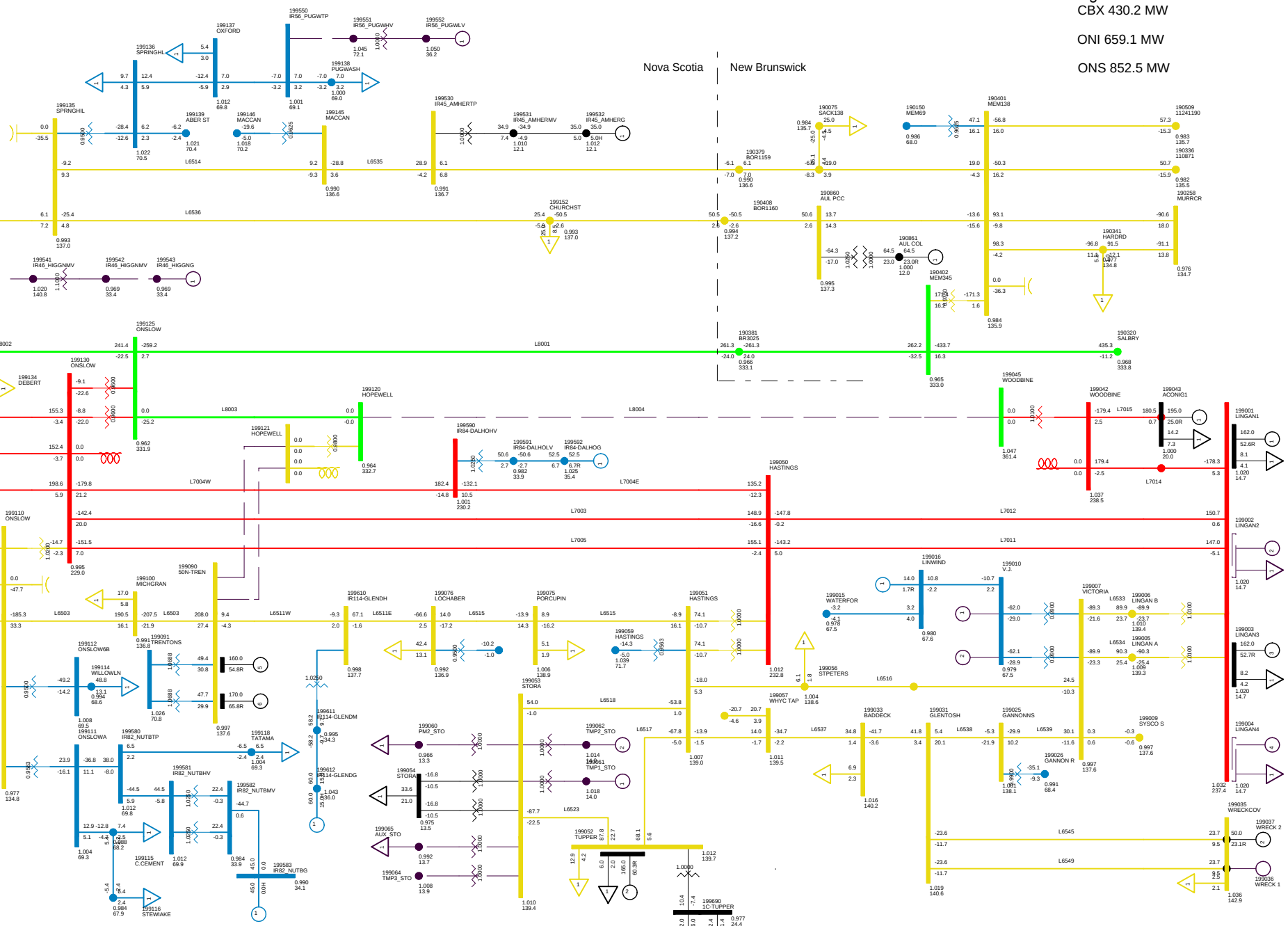

2013WP-NS-0

C50SS 1P FAULT ON L6507, BBU 79N-606, 2-UNIT SPS

NORTHEASTERN NS SUN, FEB 15 2009 16:11

Total Wind Gen: 290.1 MW | Gross Tupper 165.0 MW | Gross Wreck Cove 50.0 MW | Net Stora Load 33.7 MW

Gross Lingan 324.0 MW | Gross Trenton 330.0 MW | Gross Gas Turbine 24.0 MW | Total BMPC Load 75.5 MW

Gross Pt Aconi 195.0 MW | Gross Tuft's Cove 390.8 MW | Gross Small Hydro 182.4 MW

Bus - VOLTAGE (KV/PU)
Branch - MW/MVAR
Equipment - MW/MVAR

110.0%RATEB
1.050OV 0.950UV
KV: <=25.000 <=69.000 <=138.000 <=230.000 <=345.000 >345.000

Figure ___

NSX 55.3 MW

CBX 731.6 MW

ONI 959.6 MW

ONS 852.0 MW

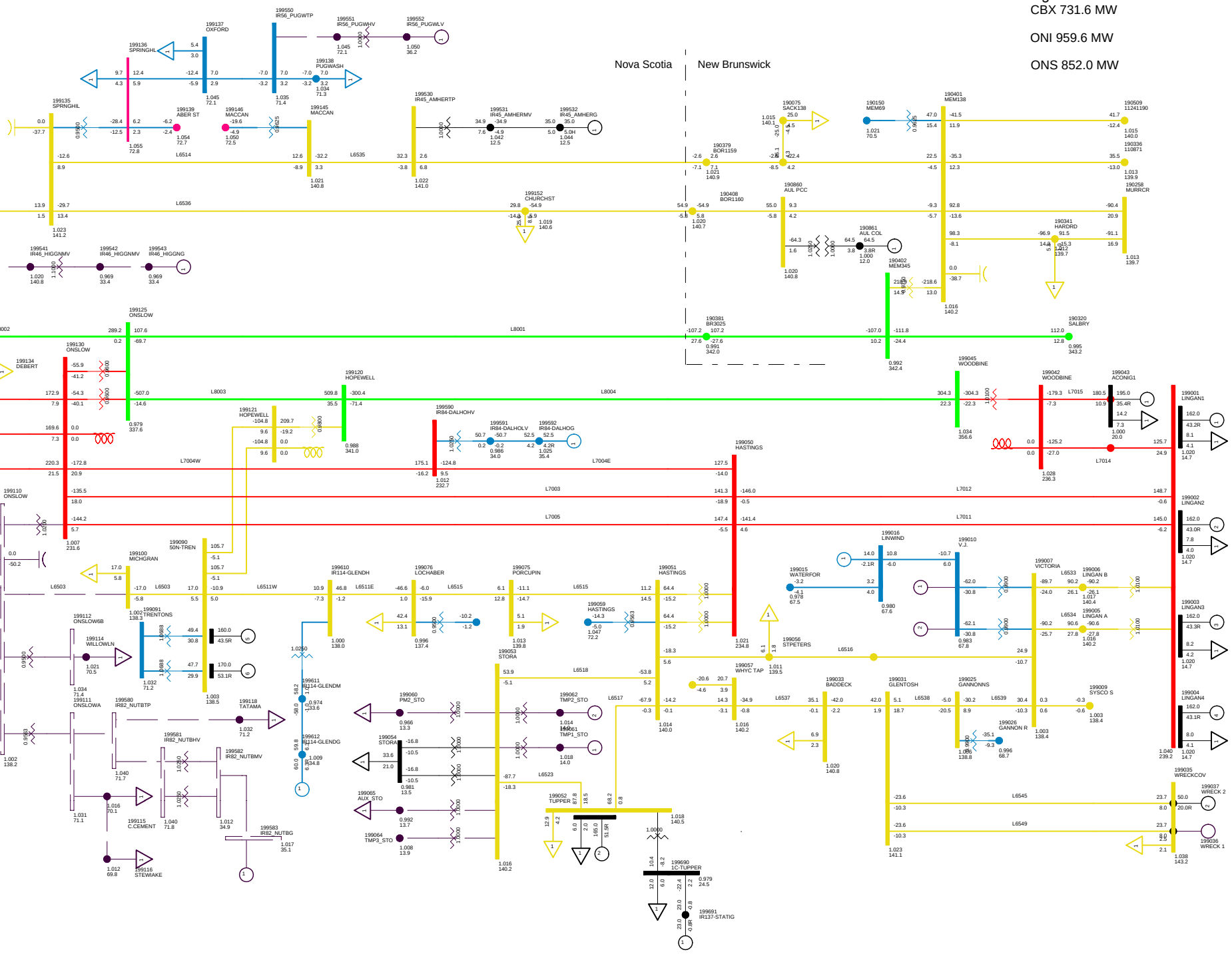

2013WP-NS-0
C51 1P FAULT ON 1N BUS 61
NORTHEASTERN NS SUN, FEB 15 2009 16:11

Total Wind Gen: 245.1 MW | Gross Tupper 165.0 MW | Gross Wreck Cove 50.0 MW | Net Stora Load 33.7 MW
Gross Lingan 648.0 MW | Gross Trenton 330.0 MW | Gross Gas Turbine 24.0 MW | Total BMPC Load 75.5 MW
Gross Pt Aconi 195.0 MW | Gross Tuft's Cove 390.8 MW | Gross Small Hydro 182.4 MW

Bus - VOLTAGE (KV/PU)
Branch - MW/MVAR
Equipment - MW/MVAR
110.0%RATEB
1.050OV 0.950UV
KV: <=25.000 <=69.000 <=138.000 <=230.000 <=345.000 >345.000

Figure ___

NSX -0.1 MW

CBX 731.5 MW

ONI 960.9 MW

ONS 850.6 MW

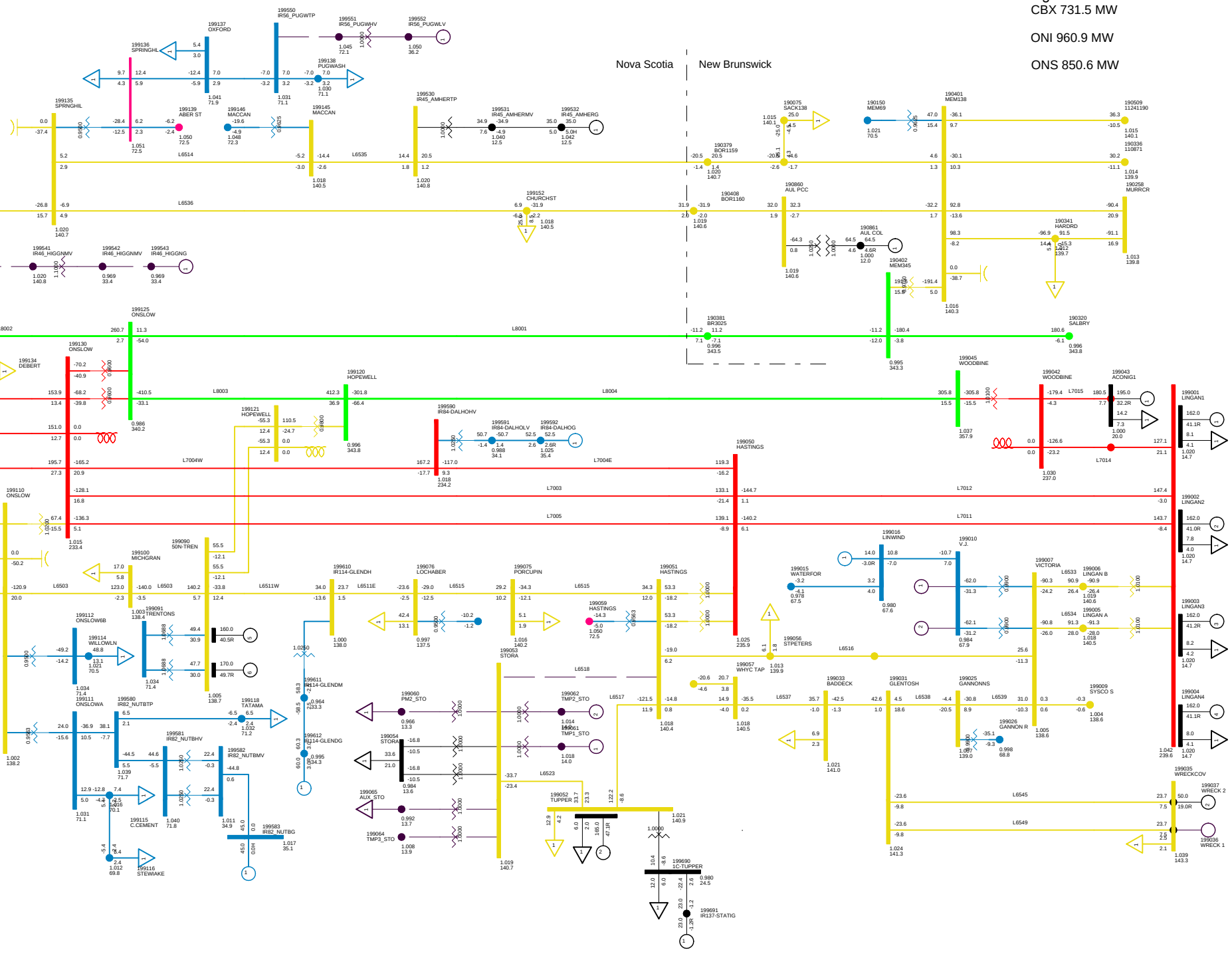

2013WP-NS-0
C52 BBU 47C-601
NORTHEASTERN NS SUN, FEB 15 2009 16:11

Total Wind Gen: 290.1 MW | Gross Tupper 165.0 MW | Gross Wreck Cove 50.0 MW | Net Stora Load 33.7 MW
Gross Lingan 648.0 MW | Gross Trenton 330.0 MW | Gross Gas Turbine 24.0 MW | Total BMPC Load 75.5 MW
Gross Pt Aconi 195.0 MW | Gross Tuft's Cove 390.8 MW | Gross Small Hydro 182.4 MW

Bus - VOLTAGE (KV/PU)
Branch - MW/MVAR
Equipment - MW/MVAR
110.0%RATEB
1.050OV 0.950UV
KV: <=25.000 <=69.000 <=138.000 <=230.000 <=345.000 >345.000

Figure ___

NSX 0.1 MW

CBX 731.8 MW

ONI 961.2 MW

ONS 850.7 MW

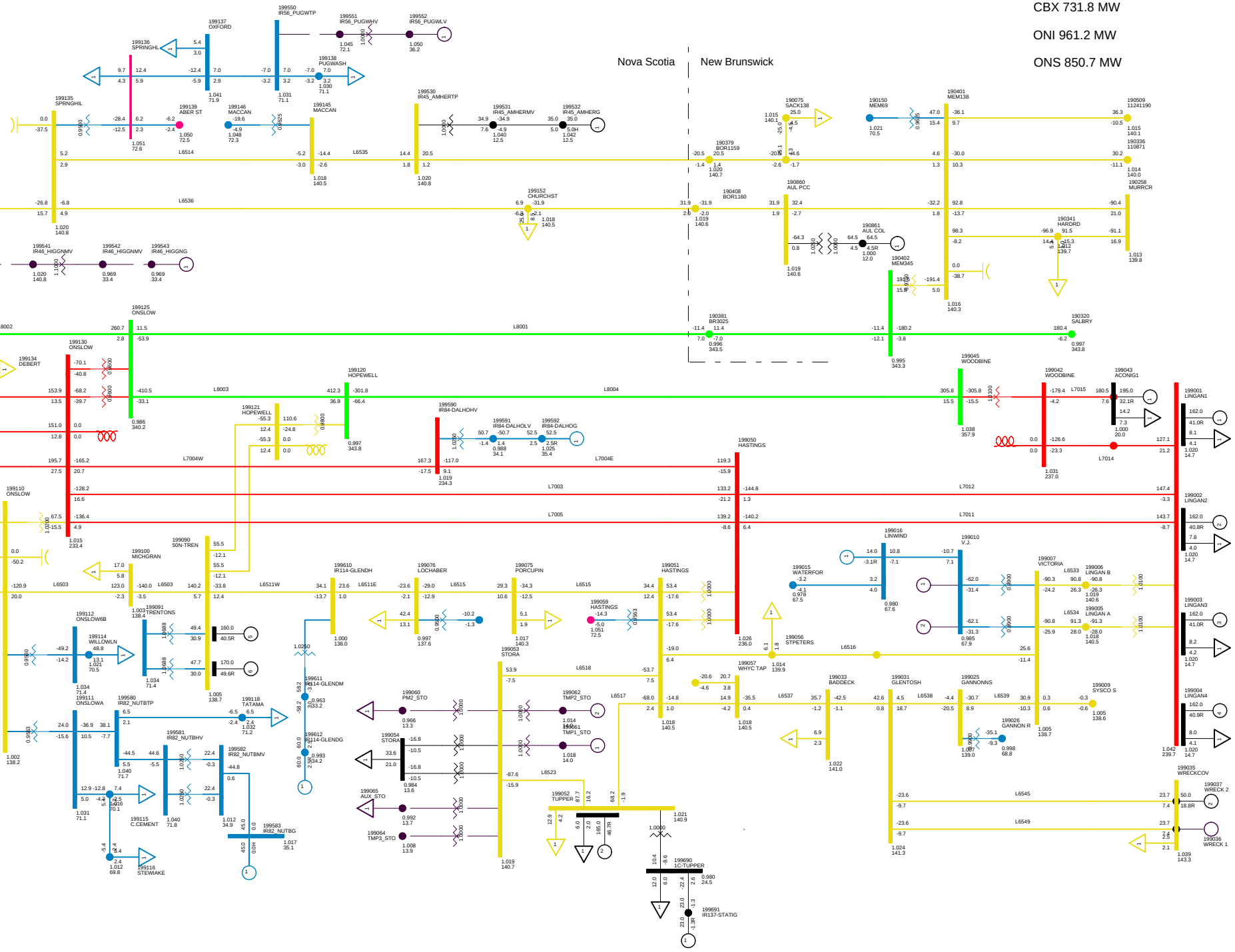

2013WP-NS-0
C53 BREAKR 47C-602 FAULT
NORTHEASTERN NS SUN, FEB 15 2009 16:11

Total Wind Gen: 290.1 MW | Gross Tupper 165.0 MW | Gross Wreck Cove 50.0 MW | Net Stora Load 33.7 MW
Gross Lingan 648.0 MW | Gross Trenton 330.0 MW | Gross Gas Turbine 24.0 MW | Total BMPC Load 75.5 MW
Gross Pt Aconi 195.0 MW | Gross Tuft's Cove 390.8 MW | Gross Small Hydro 182.4 MW

Bus - VOLTAGE (KV/PU)
Branch - MW/MVAR
Equipment - MW/MVAR
110.0%RATEB
1.0500V 0.950UV
KV: <=25.000 <=69.000 <=138.000 <=230.000 <=345.000 >345.000

Figure ___

NSX 0.1 MW

CBX 731.8 MW

ONI 961.2 MW

ONS 850.7 MW

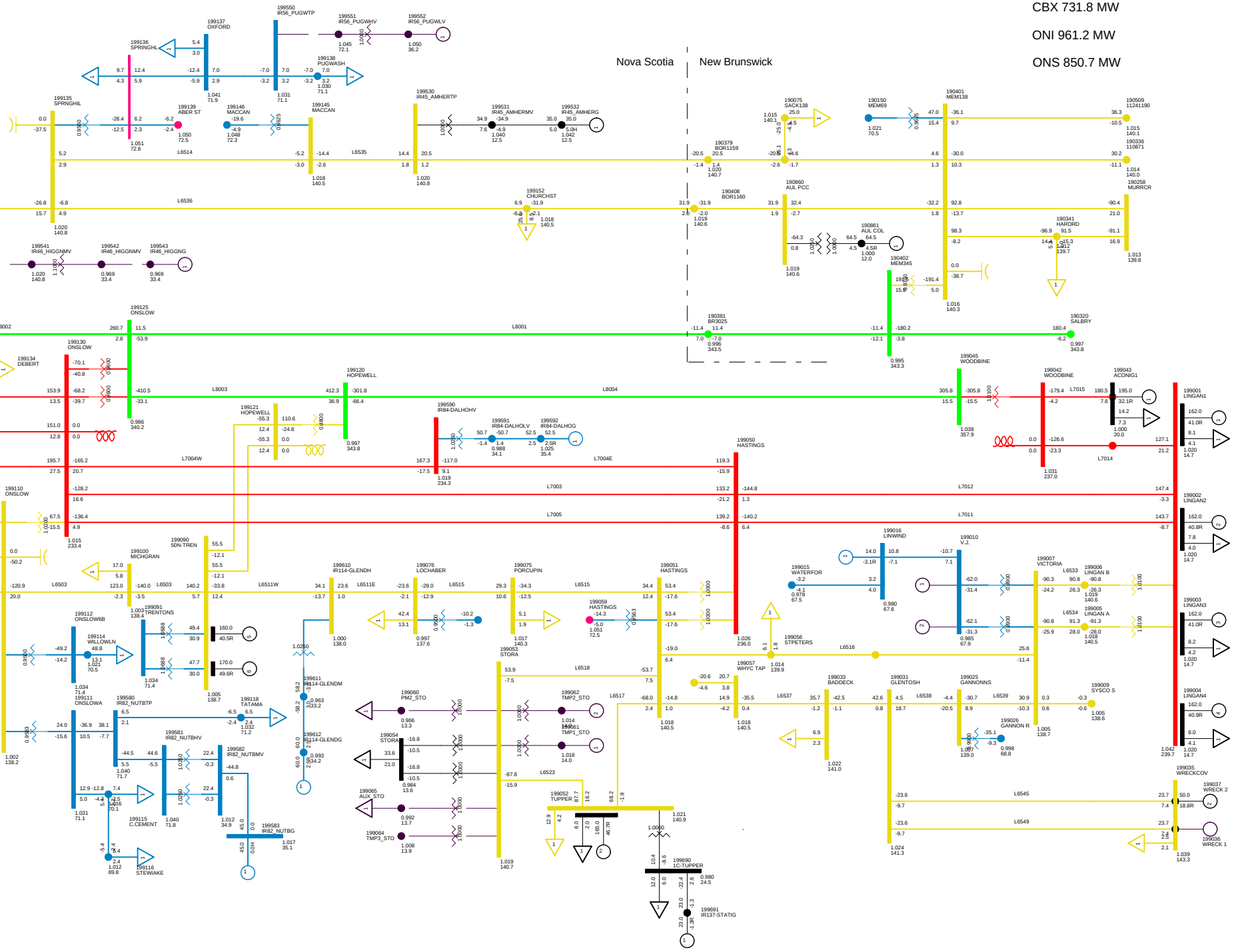

2013 WINTER PEAK STORA MIN
NS-NB=0; NB-NE=500; CBX=732; ONI=961 ONS=851
NORTHEASTERN NS SUN, FEB 15 2009 16:11

Total Wind Gen: 290.1 MW | Gross Tupper 165.0 MW | Gross Wreck Cove 50.0 MW | Net Stora Load 33.7 MW
Gross Lingan 648.0 MW | Gross Trenton 330.0 MW | Gross Gas Turbine 24.0 MW | Total BMPC Load 75.5 MW
Gross Pt Aconi 195.0 MW | Gross Tuft's Cove 390.8 MW | Gross Small Hydro 182.4 MW

Bus - VOLTAGE (KV/PU)
Branch - MW/MVAR
Equipment - MW/MVAR
110.0%RATEB
1.0500V 0.950UV
KV: <=25.000 <=69.000 <=138.000 <=230.000 <=345.000 >345.000

Figure ___

NSX -24.4 MW

CBX 712.0 MW

ONI 937.0 MW

ONS 851.0 MW

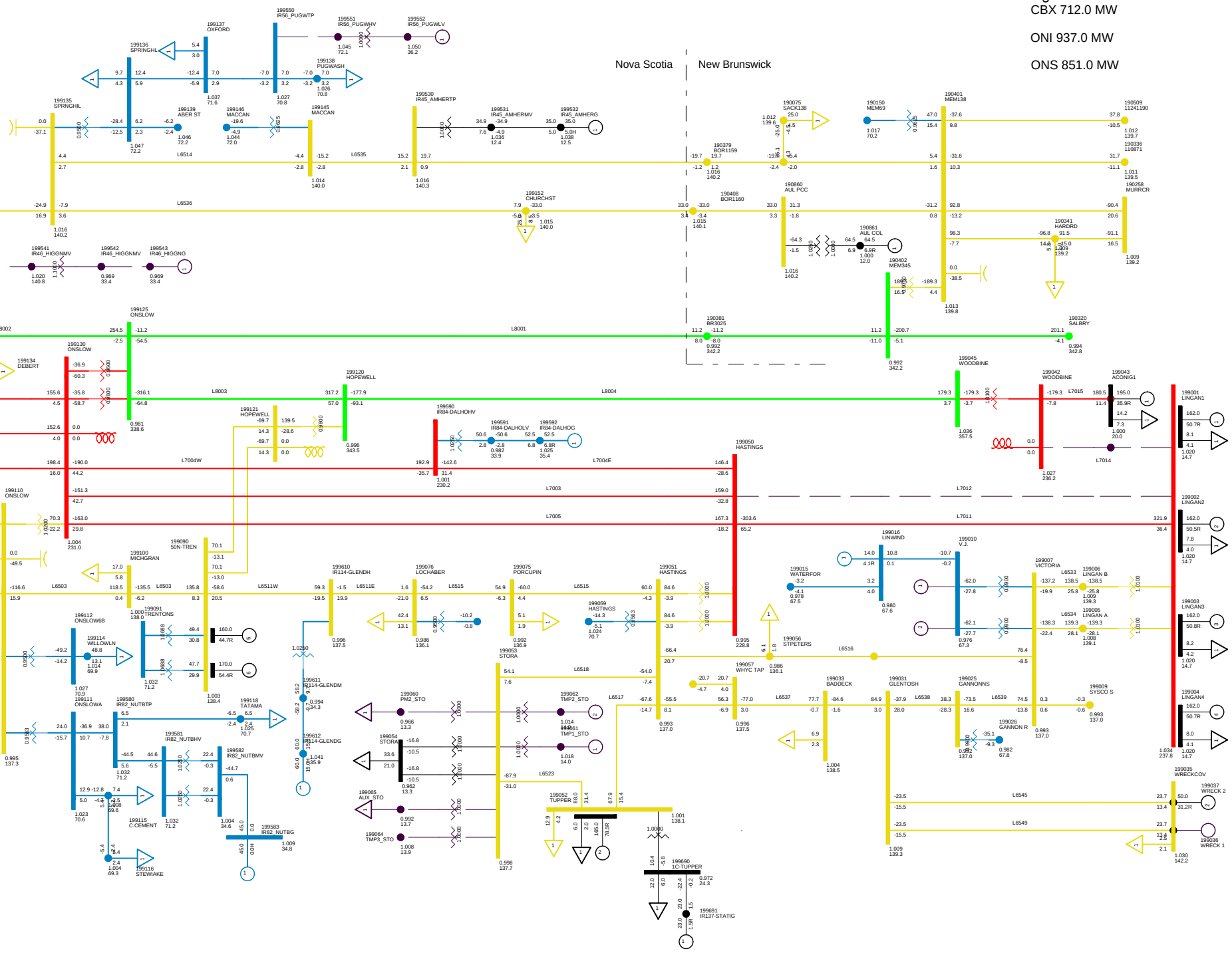

2013WP-NS-0
C54 BBU 88S-723 NO SPS
NORTHEASTERN NS SUN, FEB 15 2009 16:11

Total Wind Gen: 290.1 MW | Gross Tupper 165.0 MW | Gross Wreck Cove 50.0 MW | Net Stora Load 33.7 MW
Gross Lingan 648.0 MW | Gross Trenton 330.0 MW | Gross Gas Turbine 24.0 MW | Total BMPC Load 75.5 MW
Gross Pt Aconi 195.0 MW | Gross Tuft's Cove 390.8 MW | Gross Small Hydro 182.4 MW

Bus - VOLTAGE (KV/PU)
Branch - MW/MVAR
Equipment - MW/MVAR
110.0%RATEB
1.050pu/V 0.950pu/V
KV: <=25.000 <=69.000 <=138.000 <=230.000 <=345.000 >345.000

Figure ___

NSX -149.2 MW

CBX 577.2 MW

ONI 811.7 MW

ONS 850.7 MW

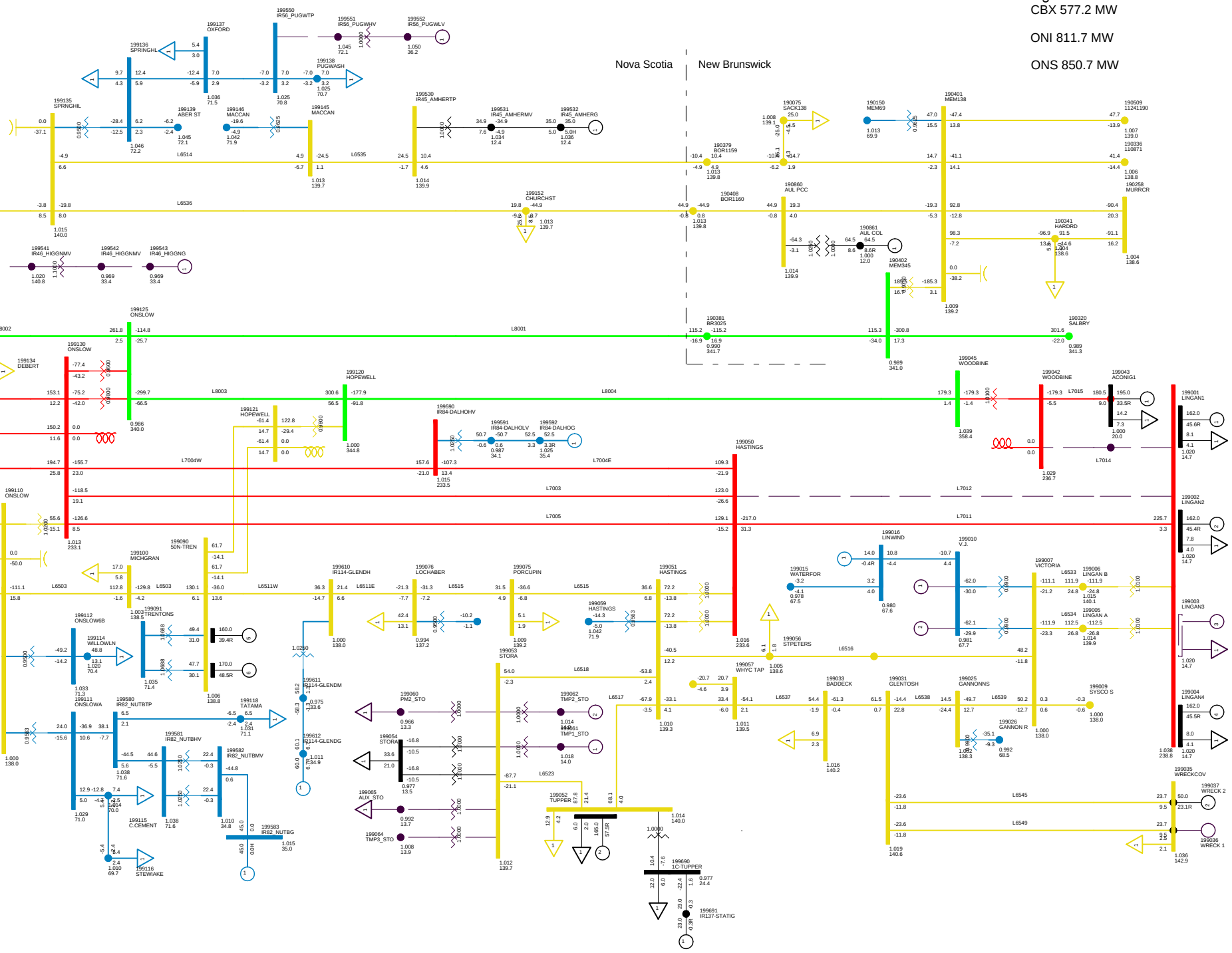
Nova Scotia
New Brunswick
199550 IR56_PUGWTP
199551 IR56_PUGWHV
199552 IR56_PUGWLV
199137 OXFORD
199136 SPRINGHL
199138 PUGWASH
199135 SPRNGHIL
199139 ABER ST
199146 MACCAN
199145 MACCAN
199530 IR45_AMHERTP
199531 IR45_AMHERMV
199532 IR45_AMHERG
190075 SACK138
190150 MEM69
190401 MEM138
190509 11241190
190379 BOR1159
190336 110871
190258 MURRCR
199152 CHURCHST
190408 BOR1160
190860 AUL PCC
190861 AUL COL
190341 HARDRD
190402 MEM345
199540 IR46_HIGGNTB
199541 IR46_HIGGNMV
199542 IR46_HIGGNMV
199543 IR46_HIGGNG
199195 103H-LAK
199125 ONSLOW
190381 BR3025
190320 SALBRY
199130 ONSLOW
199134 DEBERT
199120 HOPEWELL
199045 WOODBINE
199042 WOODBINE
199043 ACONIG1
199200 BRUSHY
199121 HOPEWELL
199590 IR84-DALHOHV
199591 IR84-DALHOLV
199592 IR84-DALHOG
199050 HASTINGS
199001 LINGAN1
199002 LINGAN2
199003 LINGAN3
199004 LINGAN4
199202 BRUSHSVC
199110 ONSLOW
199090 50N-TREN
199100 MICHGRAN
199154 ELMSDALE
199016 LINWIND
199010 V.J.
199015 WATERFOR
199007 VICTORIA
199006 LINGAN B
199005 LINGAN A
199009 SYSCO S
199610 IR114-GLENDH
199076 LOCHABER
199075 PORCUPIN
199051 HASTINGS
199059 HASTINGS
199056 STPETERS
199057 WHYC TAP
199053 STORA
199112 ONSLOW6B
199114 WILLOWLN
199091 TRENTONS
199111 ONSLOWA
199580 IR82_NUTBTP
199581 IR82_NUTBHV
199582 IR82_NUTBMV
199118 TATAMA
199611 IR114-GLENDM
199612 IR114-GLENDG
199115 C.CEMENT
199116 STEWIAKE
199583 IR82_NUTBG
199060 PM2_STO
199054 STORA
199065 AUX_STO
199064 TMP3_STO
199062 TMP2_STO
199061 TMP1_STO
199052 TUPPER
199690 IC-TUPPER
199691 IR137-STATIG
199033 BADDECK
199031 GLENTOSH
199025 GANNONNS
199026 GANNON R
199035 WRECKCOV
199037 WRECK 2
199036 WRECK 1
L6001
L6002
L6003
L6004
L6007
L6008
L6009
L6010
L6011
L6012
L6013
L6014
L6015
L6016
L6017
L6018
L6023
L6024
L6025
L6026
L6027
L6028
L6029
L6030
L6031
L6032
L6033
L6034
L6035
L6036
L6037
L6038
L6039
L6040
L6041
L6042
L6043
L6044
L6045
L6046
L6047
L6048
L6049
L6050
L6051
L6052
L6053
L6054
L6055
L6056
L6057
L6058
L6059
L6060
L6061
L6062
L6063
L6064
L6065
L6066
L6067
L6068
L6069
L6070
L6071
L6072
L6073
L6074
L6075
L6076
L6077
L6078
L6079
L6080
L6081
L6082
L6083
L6084
L6085
L6086
L6087
L6088
L6089
L6090
L6091
L6092
L6093
L6094
L6095
L6096
L6097
L6098
L6099
L6100
L6101
L6102
L6103
L6104
L6105
L6106
L6107
L6108
L6109
L6110
L6111
L6112
L6113
L6114
L6115
L6116
L6117
L6118
L6119
L6120
L6121
L6122
L6123
L6124
L6125
L6126
L6127
L6128
L6129
L6130
L6131
L6132
L6133
L6134
L6135
L6136
L6137
L6138
L6139
L6140
L6141
L6142
L6143
L6144
L6145
L6146
L6147
L6148
L6149
L6150
L6151
L6152
L6153
L6154
L6155
L6156
L6157
L6158
L6159
L6160
L6161
L6162
L6163
L6164
L6165
L6166
L6167
L6168
L6169
L6170
L6171
L6172
L6173
L6174
L6175
L6176
L6177
L6178
L6179
L6180
L6181
L6182
L6183
L6184
L6185
L6186
L6187
L6188
L6189
L6190
L6191
L6192
L6193
L6194
L6195
L6196
L6197
L6198
L6199
L6200
L6201
L6202
L6203
L6204
L6205
L6206
L6207
L6208
L6209
L6210
L6211
L6212
L6213
L6214
L6215
L6216
L6217
L6218
L6219
L6220
L6221
L6222
L6223
L6224
L6225
L6226
L6227
L6228
L6229
L6230
L6231
L6232
L6233
L6234
L6235
L6236
L6237
L6238
L6239
L6240
L6241
L6242
L6243
L6244
L6245
L6246
L6247
L6248
L6249
L6250
L6251
L6252
L6253
L6254
L6255
L6256
L6257
L6258
L6259
L6260
L6261
L6262
L6263
L6264
L6265
L6266
L6267
L6268
L6269
L6270
L6271
L6272
L6273
L6274
L6275
L6276
L6277
L6278
L6279
L6280
L6281
L6282
L6283
L6284
L6285
L6286
L6287
L6288
L6289
L6290
L6291
L6292
L6293
L6294
L6295
L6296
L6297
L6298
L6299
L6300
L6301
L6302
L6303
L6304
L6305
L6306
L6307
L6308
L6309
L6310
L6311
L6312
L6313
L6314
L6315
L6316
L6317
L6318
L6319
L6320
L6321
L6322
L6323
L6324
L6325
L6326
L6327
L6328
L6329
L6330
L6331
L6332
L6333
L6334
L6335
L6336
L6337
L6338
L6339
L6340
L6341
L6342
L6343
L6344
L6345
L6346
L6347
L6348
L6349
L6350
L6351
L6352
L6353
L6354
L6355
L6356
L6357
L6358
L6359
L6360
L6361
L6362
L6363
L6364
L6365
L6366
L6367
L6368
L6369
L6370
L6371
L6372
L6373
L6374
L6375
L6376
L6377
L6378
L6379
L6380
L6381
L6382
L6383
L6384
L6385
L6386
L6387
L6388
L6389
L6390
L6391
L6392
L6393
L6394
L6395
L6396
L6397
L6398
L6399
L6400
L6401
L6402
L6403
L6404
L6405
L6406
L6407
L6408
L6409
L6410
L6411
L6412
L6413
L6414
L6415
L6416
L6417
L6418
L6419
L6420
L6421
L6422
L6423
L6424
L6425
L6426
L6427
L6428
L6429
L6430
L6431
L6432
L6433
L6434
L6435
L6436
L6437
L6438
L6439
L6440
L6441
L6442
L6443
L6444
L6445
L6446
L6447
L6448
L6449
L6450
L6451
L6452
L6453
L6454
L6455
L6456
L6457
L6458
L6459
L6460
L6461
L6462
L6463
L6464
L6465
L6466
L6467
L6468
L6469
L6470
L6471
L6472
L6473
L6474
L6475
L6476
L6477
L6478
L6479
L6480
L6481
L6482
L6483
L6484
L6485
L6486
L6487
L6488
L6489
L6490
L6491
L6492
L6493
L6494
L6495
L6496
L6497
L6498
L6499
L6500
L6501
L6502
L6503
L6504
L6505
L6506
L6507
L6508
L6509
L6510
L6511
L6512
L6513
L6514
L6515
L6516
L6517
L6518
L6519
L6520
L6521
L6522
L6523
L6524
L6525
L6526
L6527
L6528
L6529
L6530
L6531
L6532
L6533
L6534
L6535
L6536
L6537
L6538
L6539
L6540
L6541
L6542
L6543
L6544
L6545
L6546
L6547
L6548
L6549
L6550
L6551
L6552
L6553
L6554
L6555
L6556
L6557
L6558
L6559
L6560
L6561
L6562
L6563
L6564
L6565
L6566
L6567
L6568
L6569
L6570
L6571
L6572
L6573
L6574
L6575
L6576
L6577
L6578
L6579
L6580
L6581
L6582
L6583
L6584
L6585
L6586
L6587
L6588
L6589
L6590
L6591
L6592
L6593
L6594
L6595
L6596
L6597
L6598
L6599
L6600
L6601
L6602
L6603
L6604
L6605
L6606
L6607
L6608
L6609
L6610
L6611
L6612
L6613
L6614
L6615
L6616
L6617
L6618
L6619
L6620
L6621
L6622
L6623
L6624
L6625
L6626
L6627
L6628
L6629
L6630
L6631
L6632
L6633
L6634
L6635
L6636
L6637
L6638
L6639
L6640
L6641
L6642
L6643
L6644
L6645
L6646
L6647
L6648
L6649
L6650
L6651
L6652
L6653
L6654
L6655
L6656
L6657
L6658
L6659
L6660
L6661
L6662
L6663
L6664
L6665
L6666
L6667
L6668
L6669
L6670
L6671
L6672
L6673
L6674
L6675
L6676
L6677
L6678
L6679
L6680
L6681
L6682
L6683
L6684
L6685
L6686
L6687
L6688
L6689
L6690
L6691
L6692
L6693
L6694
L6695
L6696
L6697
L6698
L6699
L6700
L6701
L6702
L6703
L6704
L6705
L6706
L6707
L6708
L6709
L6710
L6711
L6712
L6713
L6714
L6715
L6716
L6717
L6718
L6719
L6720
L6721
L6722
L6723
L6724
L6725
L6726
L6727
L6728
L6729
L6730
L6731
L6732
L6733
L6734
L6735
L6736
L6737
L6738
L6739
L6740
L6741
L6742
L6743
L6744
L6745
L6746
L6747
L6748
L6749
L6750
L6751
L6752
L6753
L6754
L6755
L6756
L6757
L6758
L6759
L6760
L6761
L6762
L6763
L6764
L6765
L6766
L6767
L6768
L6769
L6770
L6771
L6772
L6773
L6774
L6775
L6776
L6777
L6778
L6779
L6780
L6781
L6782
L6783
L6784
L6785
L6786
L6787
L6788
L6789
L6790
L6791
L6792
L6793
L6794
L6795
L6796
L6797
L6798
L6799
L6800
L6801
L6802
L6803
L6804
L6805
L6806
L6807
L6808
L6809
L6810
L6811
L6812
L6813
L6814
L6815
L6816
L6817
L6818
L6819
L6820
L6821
L6822
L6823
L6824
L6825
L6826
L6827
L6828
L6829
L6830
L6831
L6832
L6833
L6834
L6835
L6836
L6837
L6838
L6839
L6840
L6841
L6842
L6843
L6844
L6845
L6846
L6847
L6848
L6849
L6850
L6851
L6852
L6853
L6854
L6855
L6856
L6857
L6858
L6859
L6860
L6861
L6862
L6863
L6864
L6865
L6866
L6867
L6868
L6869
L6870
L6871
L6872
L6873
L6874
L6875
L6876
L6877
L6878
L6879
L6880
L6881
L6882
L6883
L6884
L6885
L6886
L6887
L6888
L6889
L6890
L6891
L6892
L6893
L6894
L6895
L6896
L6897
L6898
L6899
L6900
L6901
L6902
L6903
L6904
L6905
L6906
L6907
L6908
L6909
L6910
L6911
L6912
L6913
L6914
L6915
L6916
L6917
L6918
L6919
L6920
L6921
L6922
L6923
L6924
L6925
L6926
L6927
L6928
L6929
L6930
L6931
L6932
L6933
L6934
L6935
L6936
L6937
L6938
L6939
L6940
L6941
L6942
L6943
L6944
L6945
L6946
L6947
L6948
L6949
L6950
L6951
L6952
L6953
L6954
L6955
L6956
L6957
L6958
L6959
L6960
L6961
L6962
L6963
L6964
L6965
L6966
L6967
L6968
L6969
L6970
L6971
L6972
L6973
L6974
L6975
L6976
L6977
L6978
L6979
L6980
L6981
L6982
L6983
L6984
L6985
L6986
L6987
L6988
L6989
L6990
L6991
L6992
L6993
L6994
L6995
L6996
L6997
L6998
L6999
L7000
L7001
L7002
L7003
L7004W
L7004E
L7005
L7006
L7007
L7008
L7009
L7010
L7011
L7012
L7013
L7014
L7015
L7016
L7017
L7018
L7019
L7020
L7021
L7022
L7023
L7024
L7025
L7026
L7027
L7028
L7029
L7030
L7031
L7032
L7033
L7034
L7035
L7036
L7037
L7038
L7039
L7040
L7041
L7042
L7043
L7044

NSX -11.2 MW

CBX 732.7 MW

ONI 955.3 MW

ONS 856.0 MW

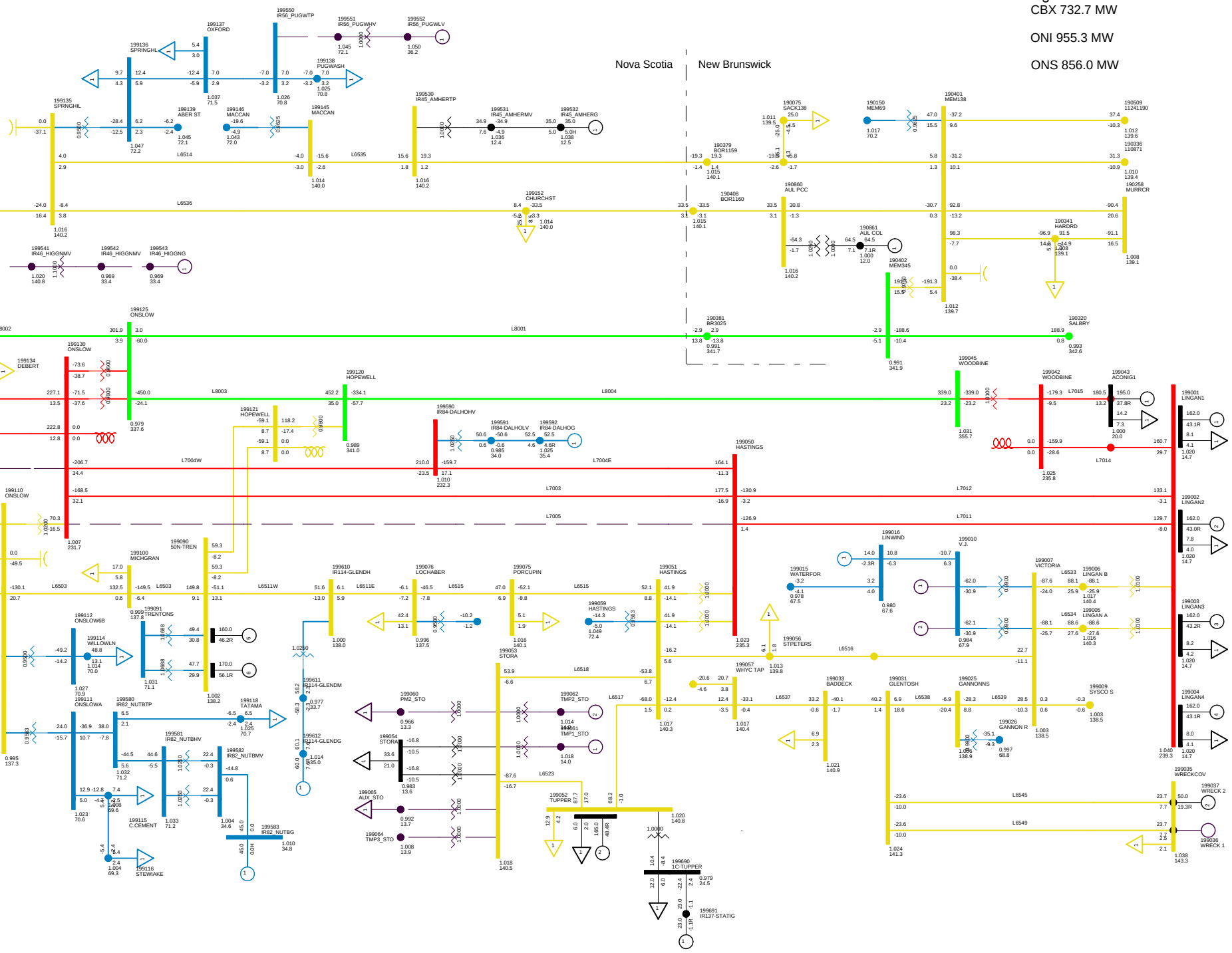

2013WP-NS-0
C55 BBU 67N-712
NORTHEASTERN NS SUN, FEB 15 2009 16:11

Total Wind Gen: 290.1 MW | Gross Tupper 165.0 MW | Gross Wreck Cove 50.0 MW | Net Stora Load 33.7 MW
Gross Lingan 648.0 MW | Gross Trenton 330.0 MW | Gross Gas Turbine 24.0 MW | Total BMPC Load 75.5 MW
Gross Pt Aconi 195.0 MW | Gross Tuft's Cove 390.8 MW | Gross Small Hydro 182.4 MW

Bus - VOLTAGE (KV/PU)
Branch - MW/MVAR
Equipment - MW/MVAR
110.0%RATEB
1.050pu 0.950pu
KV: <=25.000 <=69.000 <=138.000 <=230.000 <=345.000 >345.000

Figure ___

NSX -45.2 MW

CBX 720.1 MW

ONI 921.4 MW

ONS 854.8 MW

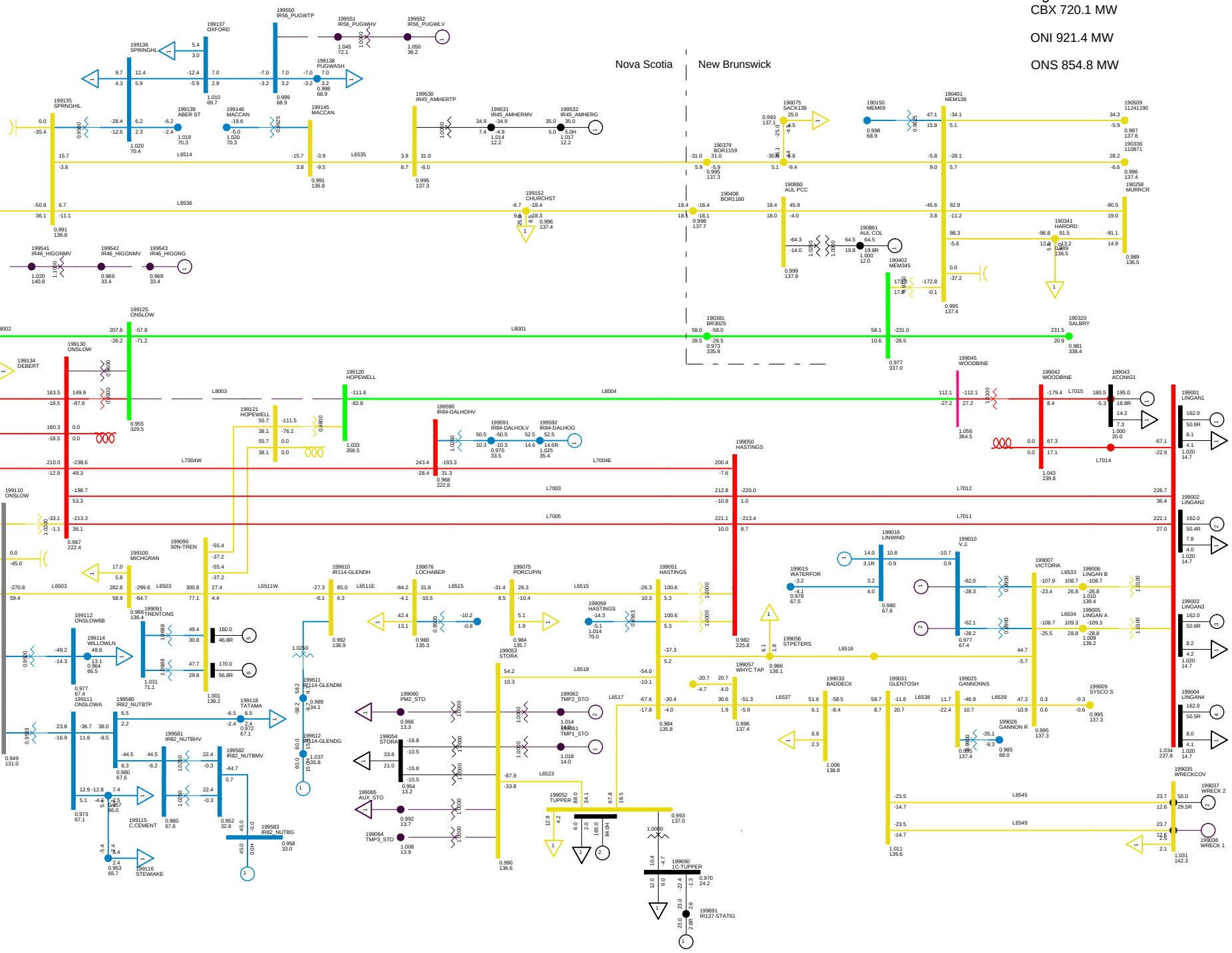

2013WP-NS-0
C56 BBU 67N-811 L8003 + T82 NO SPS
NORTHEASTERN NS SUN, FEB 15 2009 16:11

Total Wind Gen: 290.1 MW | Gross Tupper 165.0 MW | Gross Wreck Cove 50.0 MW | Net Stora Load 33.7 MW
Gross Lingan 648.0 MW | Gross Trenton 330.0 MW | Gross Gas Turbine 24.0 MW | Total BMPC Load 75.5 MW
Gross Pt Aconi 195.0 MW | Gross Tuft's Cove 390.8 MW | Gross Small Hydro 182.4 MW

Bus - VOLTAGE (KV/PU)
Branch - MW/MVAR
Equipment - MW/MVAR
110.0%RATEB
1.050UV 0.950UV
KV: <=25.000 <=69.000 <=138.000 <=230.000 <=345.000 >345.000

Figure ___

NSX -169.7 MW

CBX 577.8 MW

ONI 794.4 MW

ONS 853.5 MW

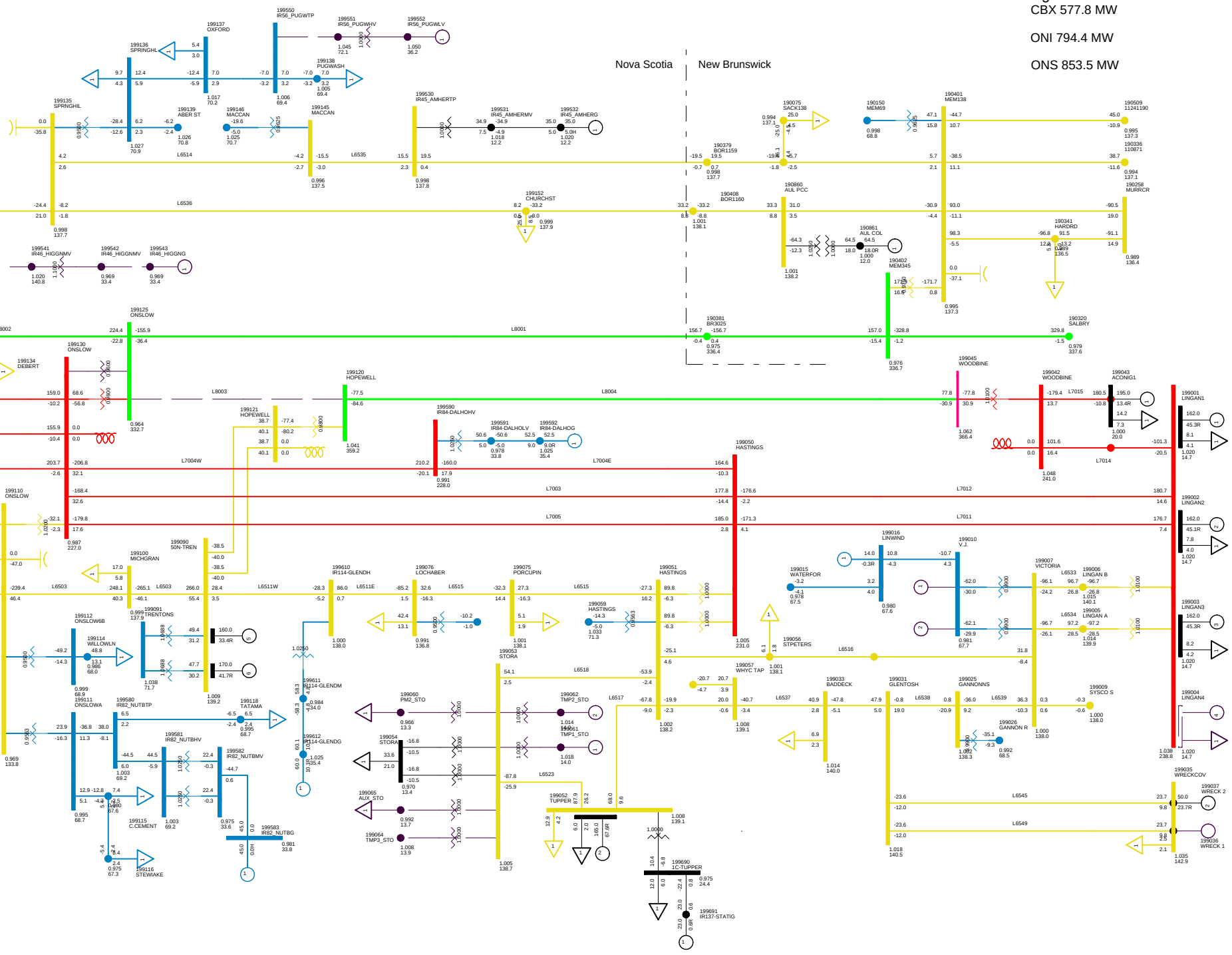

2013WP-NS-0
C56S BBU 67N-811 L8003 + T82 1 UNIT SPS
NORTHEASTERN NS SUN, FEB 15 2009 16:12

Total Wind Gen: 290.1 MW | Gross Tupper 165.0 MW | Gross Wreck Cove 50.0 MW | Net Stora Load 33.7 MW
Gross Lingan 486.0 MW | Gross Trenton 330.0 MW | Gross Gas Turbine 24.0 MW | Total BMPC Load 75.5 MW
Gross Pt Aconi 195.0 MW | Gross Tuft's Cove 390.8 MW | Gross Small Hydro 182.4 MW

Bus - VOLTAGE (KV/PU)
Branch - MW/MVAR
Equipment - MW/MVAR
110.0%RATEB
1.050OV 0.950UV
KV: <=25.000 <=69.000 <=138.000 <=230.000 <=345.000 >345.000

Figure ___

NSX -302.3 MW

CBX 432.8 MW

ONI 660.6 MW

ONS 852.6 MW

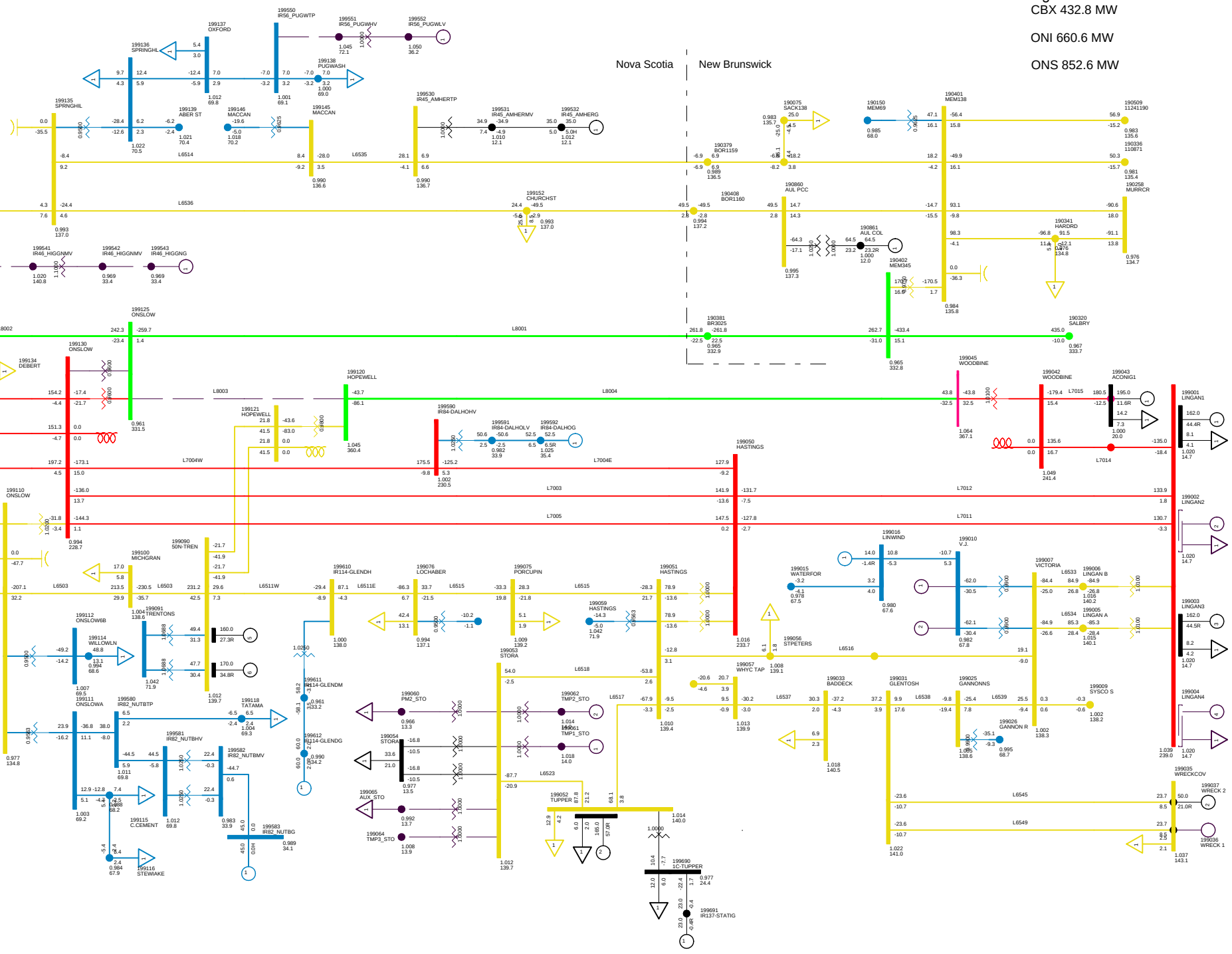

2013WP-NS-0
C56SS BBU 67N-811 L8003 + T82 2 UNIT SPS
NORTHEASTERN NS SUN, FEB 15 2009 16:12

Total Wind Gen: 290.1 MW | Gross Tupper 165.0 MW | Gross Wreck Cove 50.0 MW | Net Stora Load 33.7 MW
Gross Lingan 324.0 MW | Gross Trenton 330.0 MW | Gross Gas Turbine 24.0 MW | Total BMPC Load 75.5 MW
Gross Pt Aconi 195.0 MW | Gross Tuft's Cove 390.8 MW | Gross Small Hydro 182.4 MW

Bus - VOLTAGE (KV/PU)
Branch - MW/MVAR
Equipment - MW/MVAR
110.0%RATEB
1.050OV 0.950UV
KV: <=25.000 <=69.000 <=138.000 <=230.000 <=345.000 >345.000

Figure ___

NSX -183.7 MW

CBX 577.4 MW

ONI 793.0 MW

ONS 866.1 MW

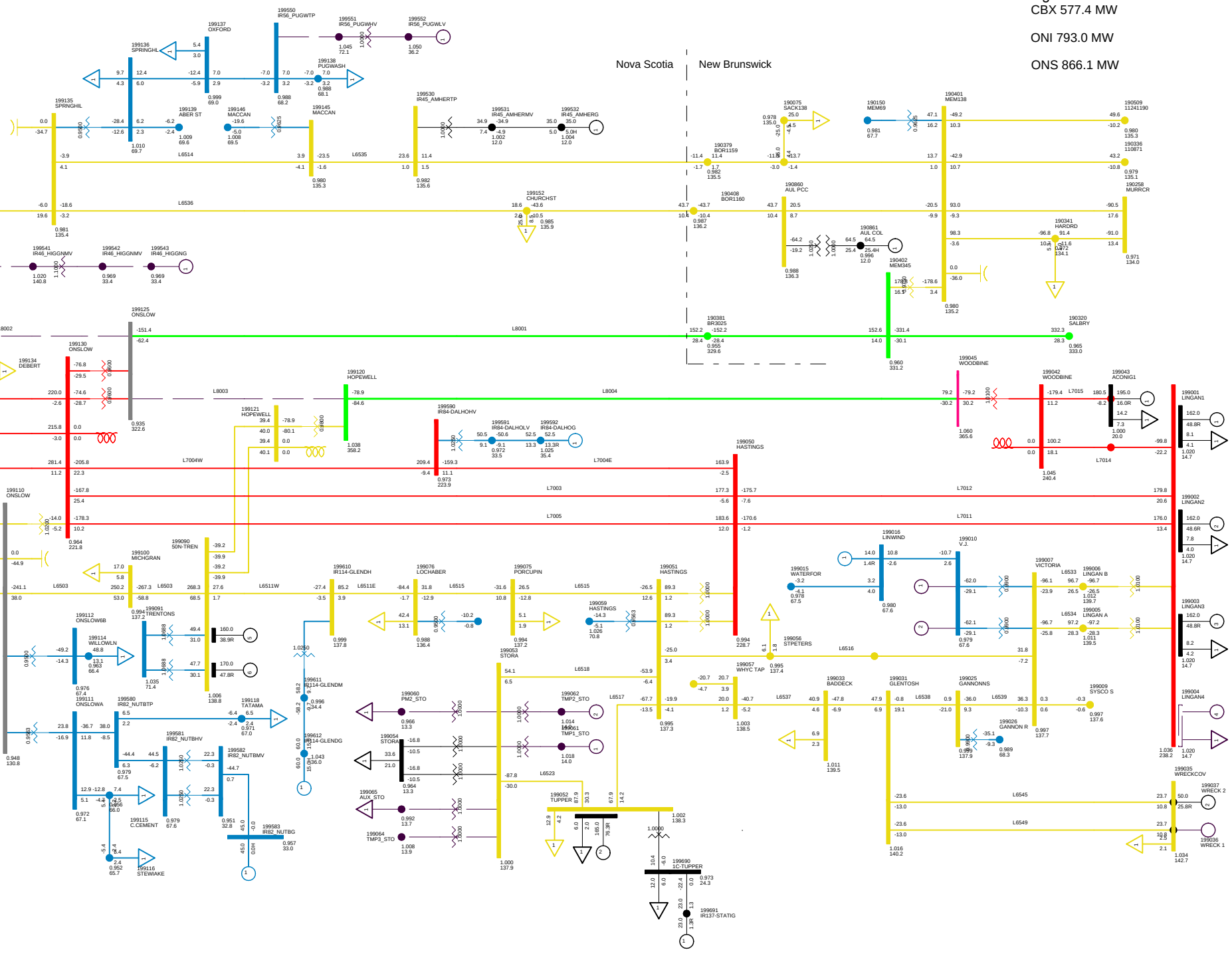

2013WP-NS-0
C57S BBU 67N-812 1-UNIT SPS
NORTHEASTERN NS SUN, FEB 15 2009 16:12

Total Wind Gen: 290.1 MW | Gross Tupper 165.0 MW | Gross Wreck Cove 50.0 MW | Net Stora Load 33.7 MW
Gross Lingan 486.0 MW | Gross Trenton 330.0 MW | Gross Gas Turbine 24.0 MW | Total BMPC Load 75.5 MW
Gross Pt Aconi 195.0 MW | Gross Tuft's Cove 390.8 MW | Gross Small Hydro 182.4 MW

Bus - VOLTAGE (KV/PU)
Branch - MW/MVAR
Equipment - MW/MVAR
110.0%RATEB
1.050OV 0.950UV
KV: <=25.000 <=69.000 <=138.000 <=230.000 <=345.000 >345.000

Figure ___

NSX -316.5 MW

CBX 432.5 MW

ONI 659.6 MW

ONS 865.4 MW

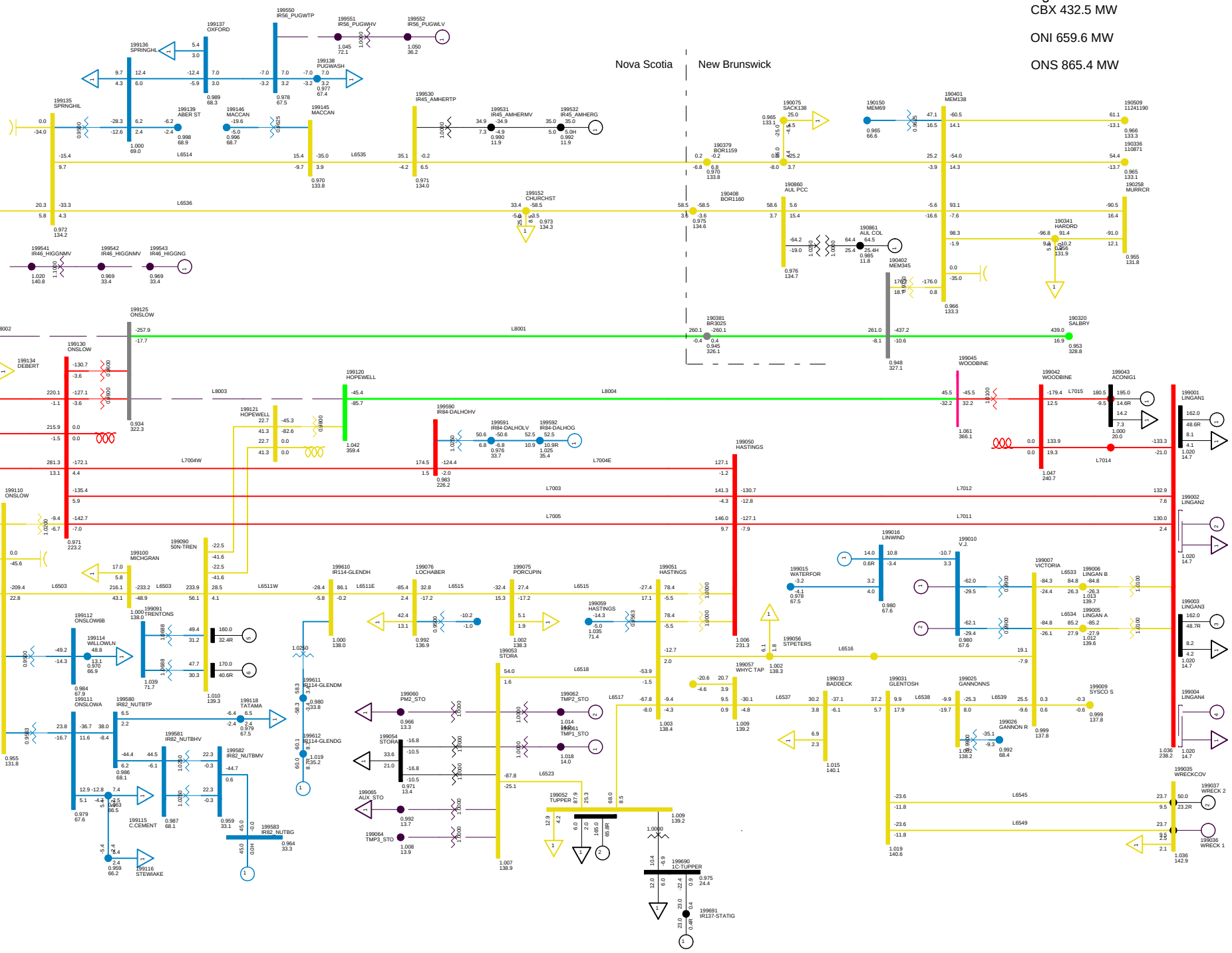

2013WP-NS-0
C57SS BBU 67N-812 2-UNIT SPS
NORTHEASTERN NS SUN, FEB 15 2009 16:12

Total Wind Gen: 290.1 MW | Gross Tupper 165.0 MW | Gross Wreck Cove 50.0 MW | Net Stora Load 33.7 MW
Gross Lingan 324.0 MW | Gross Trenton 330.0 MW | Gross Gas Turbine 24.0 MW | Total BMPC Load 75.5 MW
Gross Pt Aconi 195.0 MW | Gross Tuft's Cove 390.8 MW | Gross Small Hydro 182.4 MW

Bus - VOLTAGE (KV/PU)
Branch - MW/MVAR
Equipment - MW/MVAR
110.0%RATEB
1.050OV 0.950UV
KV: <=25.000 <=69.000 <=138.000 <=230.000 <=345.000 >345.000

Figure ___

NSX -57.4 MW

CBX 708.0 MW

ONI 908.3 MW

ONS 854.5 MW

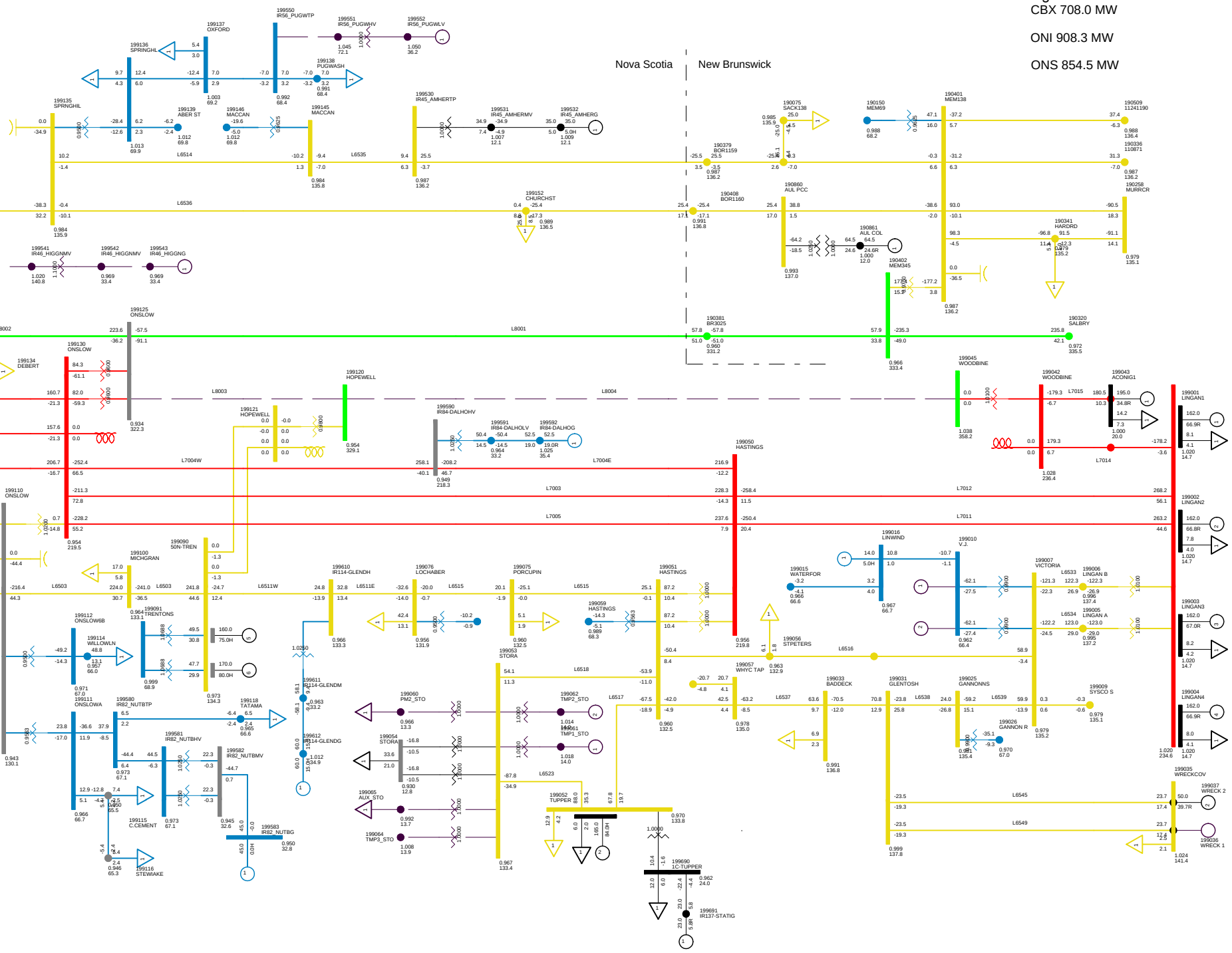

2013WP-NS-0
C58 BBU 79N-810 NO SPS
NORTHEASTERN NS SUN, FEB 15 2009 16:12

Total Wind Gen: 290.1 MW
Gross Lingan 648.0 MW
Gross Pt Aconi 195.0 MW
Gross Tupper 165.0 MW
Gross Trenton 330.0 MW
Gross Tuft's Cove 390.8 MW
Gross Wreck Cove 50.0 MW
Gross Gas Turbine 24.0 MW
Gross Small Hydro 182.4 MW
Net Stora Load 33.7 MW
Total BMPC Load 75.5 MW

Bus - VOLTAGE (KV/PU)
Branch - MW/MVAR
Equipment - MW/MVAR
110.0%RATEB
1.050UV 0.950UV
KV: <=25.000 <=69.000 <=138.000 <=230.000 <=345.000 >345.000

Figure ___

NSX -174.5 MW

CBX 571.9 MW

ONI 789.4 MW

ONS 853.4 MW

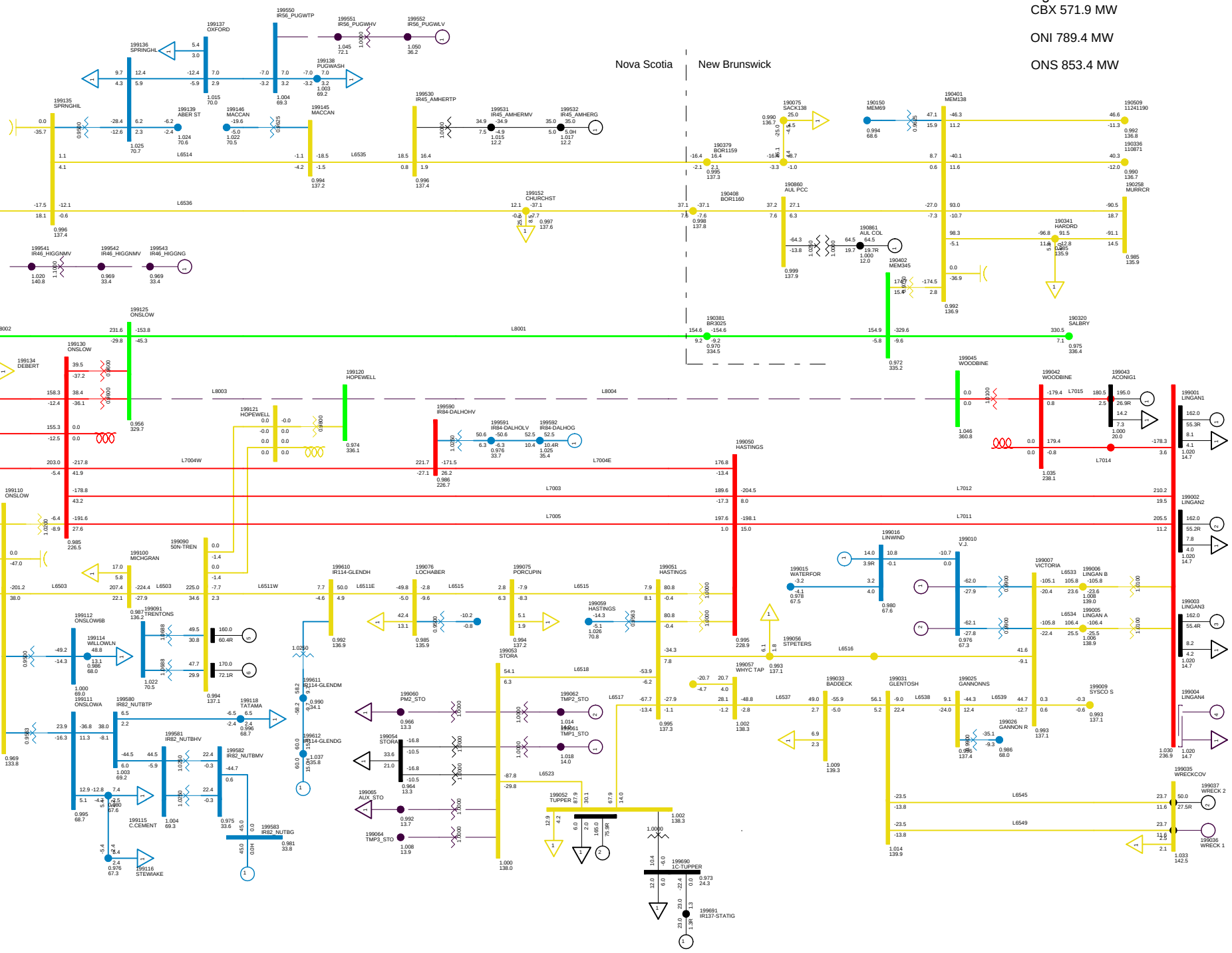

2013WP-NS-0
C58S BBU 79N-810 1-UNIT SPS
NORTHEASTERN NS SUN, FEB 15 2009 16:13

Total Wind Gen: 290.1 MW | Gross Tupper 165.0 MW | Gross Wreck Cove 50.0 MW | Net Stora Load 33.7 MW
Gross Lingan 486.0 MW | Gross Trenton 330.0 MW | Gross Gas Turbine 24.0 MW | Total BMPC Load 75.5 MW
Gross Pt Aconi 195.0 MW | Gross Tuft's Cove 390.8 MW | Gross Small Hydro 182.4 MW

Bus - VOLTAGE (KV/PU)
Branch - MW/MVAR
Equipment - MW/MVAR
110.0%RATEB
1.050OV 0.950UV
KV: <=25.000 <=69.000 <=138.000 <=230.000 <=345.000 >345.000

Figure ___

NSX -304.0 MW

CBX 430.2 MW

ONI 659.0 MW

ONS 852.7 MW

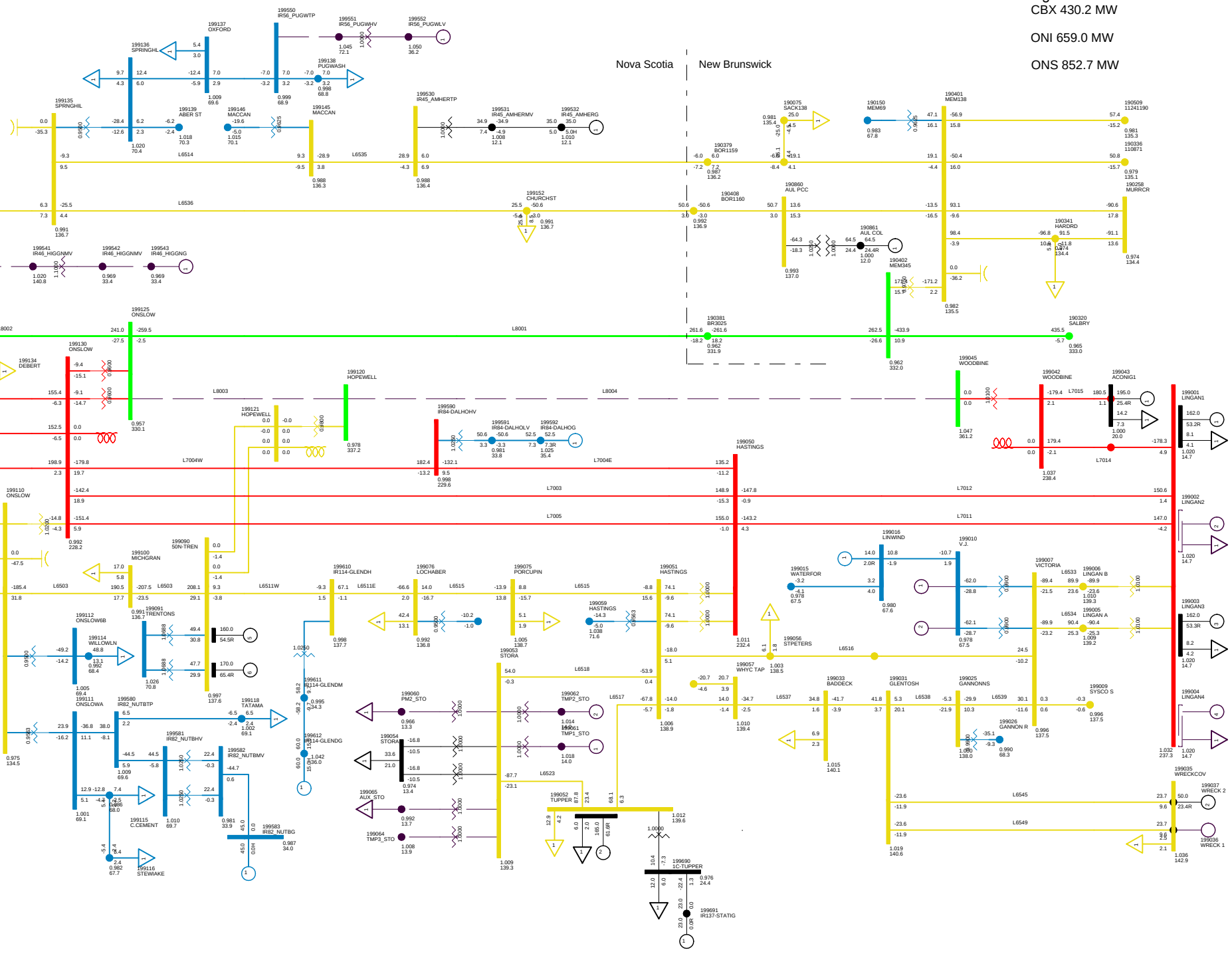

2013WP-NS-0
C58SS BBU 79N-810 2-UNIT SPS
NORTHEASTERN NS SUN, FEB 15 2009 16:13

Total Wind Gen: 290.1 MW | Gross Tupper 165.0 MW | Gross Wreck Cove 50.0 MW | Net Stora Load 33.7 MW
Gross Lingan 324.0 MW | Gross Trenton 330.0 MW | Gross Gas Turbine 24.0 MW | Total BMPC Load 75.5 MW
Gross Pt Aconi 195.0 MW | Gross Tuft's Cove 390.8 MW | Gross Small Hydro 182.4 MW

Bus - VOLTAGE (KV/PU)
Branch - MW/MVAR
Equipment - MW/MVAR
110.0%RATEB
1.050UV 0.950UV
KV: <=25.000 <=69.000 <=138.000 <=230.000 <=345.000 >345.000

Figure ___

NSX -282.6 MW

CBX 437.8 MW

ONI 678.4 MW

ONS 850.6 MW

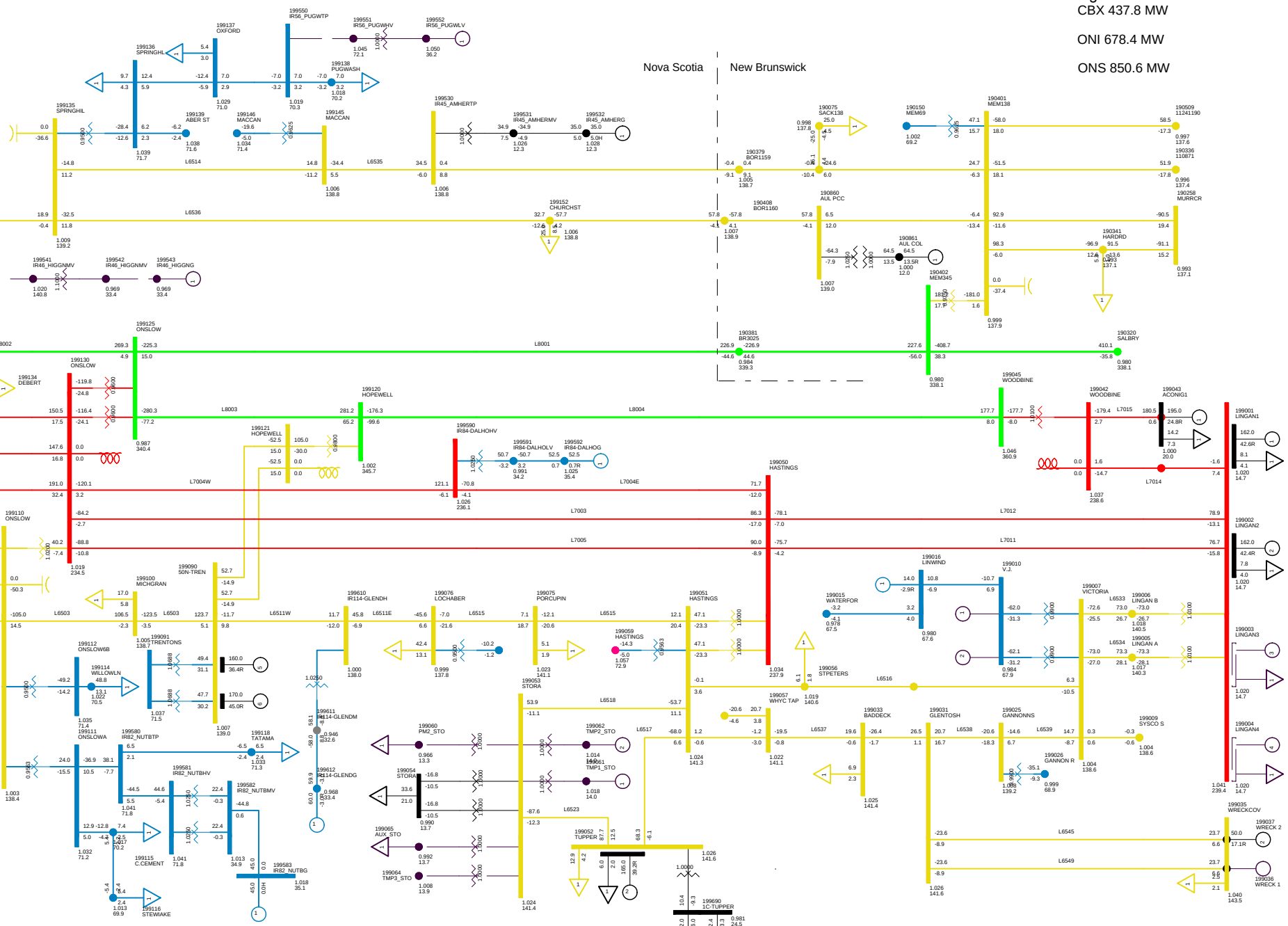

2013WP-NS-0
C59 BBU 88S-721 TRIP LINGAN 3 AND 4
NORTHEASTERN NS SUN, FEB 15 2009 16:13

Total Wind Gen: 290.1 MW | Gross Tupper 165.0 MW | Gross Wreck Cove 50.0 MW | Net Stora Load 33.7 MW
Gross Lingan 324.0 MW | Gross Trenton 330.0 MW | Gross Gas Turbine 24.0 MW | Total BMPC Load 75.5 MW
Gross Pt Aconi 195.0 MW | Gross Tuft's Cove 390.8 MW | Gross Small Hydro 182.4 MW

Bus - VOLTAGE (KV/PU)
Branch - MW/MVAR
Equipment - MW/MVAR
110.0%RATEB
1.0500V 0.950UV
KV: <=25.000 <=69.000 <=138.000 <=230.000 <=345.000 >345.000

Figure ___

NSX -3.9 MW

CBX 733.4 MW

ONI 957.6 MW

ONS 851.0 MW

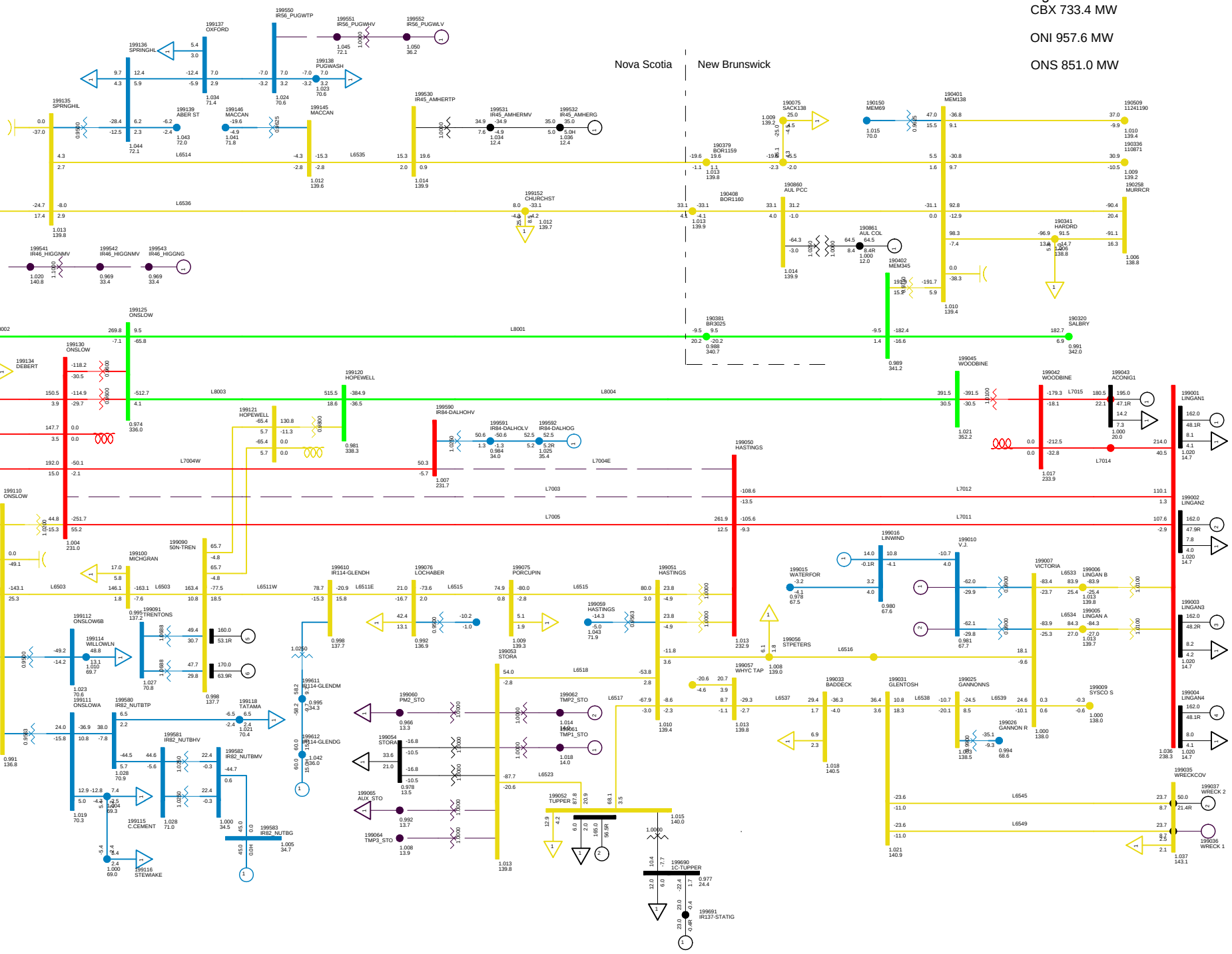

2013WP-NS-0
C60 DCT ON L7003+L7004
NORTHEASTERN NS SUN, FEB 15 2009 16:13

Total Wind Gen: 290.1 MW | Gross Tupper 165.0 MW | Gross Wreck Cove 50.0 MW | Net Stora Load 33.7 MW
Gross Lingan 648.0 MW | Gross Trenton 330.0 MW | Gross Gas Turbine 24.0 MW | Total BMPC Load 75.5 MW
Gross Pt Aconi 195.0 MW | Gross Tuft's Cove 390.8 MW | Gross Small Hydro 182.4 MW

Bus - VOLTAGE (KV/PU)
Branch - MW/MVAR
Equipment - MW/MVAR
110.0%RATEB
1.050UV 0.950UV
KV: <=25.000 <=69.000 <=138.000 <=230.000 <=345.000 >345.000

Figure ___

HSK 282.61 MW

CBX 571.8 MW

ONI 781.2 MW

ONS 852.4 MW

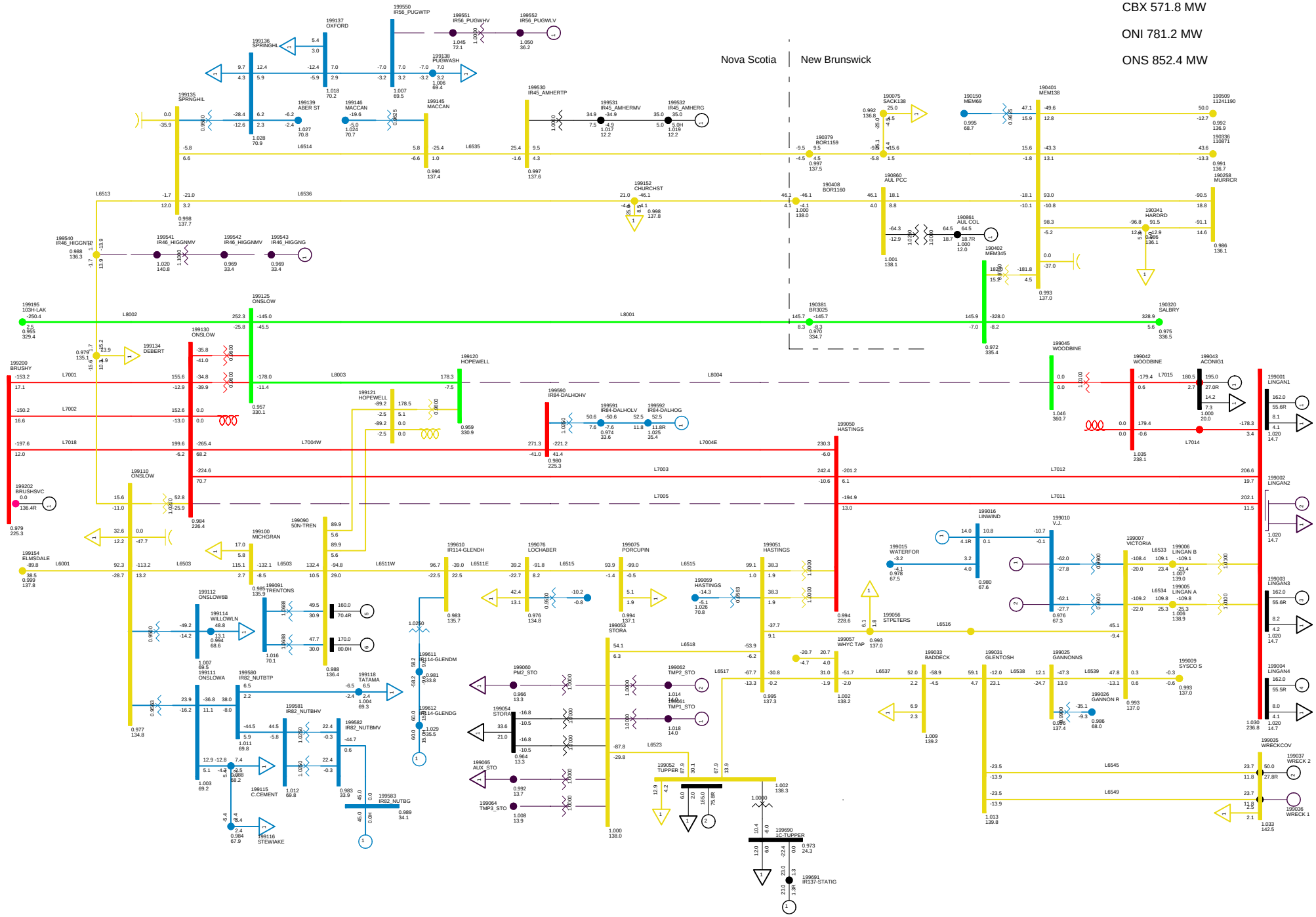

2013WP-NS-0
C61S DCT ON STRAIT CROSSING L8004-L7005 WITH 1-UNIT SPS
NORTHEASTERN NS SUN, FEB 15 2009 16:13

Total Wind Gen: 290.1 MW
Gross Lingan 486.0 MW
Gross Pt Aconi 195.0 MW
Gross Tupper 165.0 MW
Gross Trenton 330.0 MW
Gross Tuft's Cove 390.8 MW
Gross Wreck Cove 50.0 MW
Gross Gas Turbine 24.0 MW
Gross Small Hydro 182.4 MW
Net Stora Load 33.7 MW
Total BMPC Load 75.5 MW

Bus - VOLTAGE (KV/PU)
Branch - MW/MVAR
Equipment - MW/MVAR
110.0%RATEB
1.0500V 0.950UV
KV: <=25.000 <=69.000 <=138.000 <=230.000 <=345.000 >345.000

Figure ___

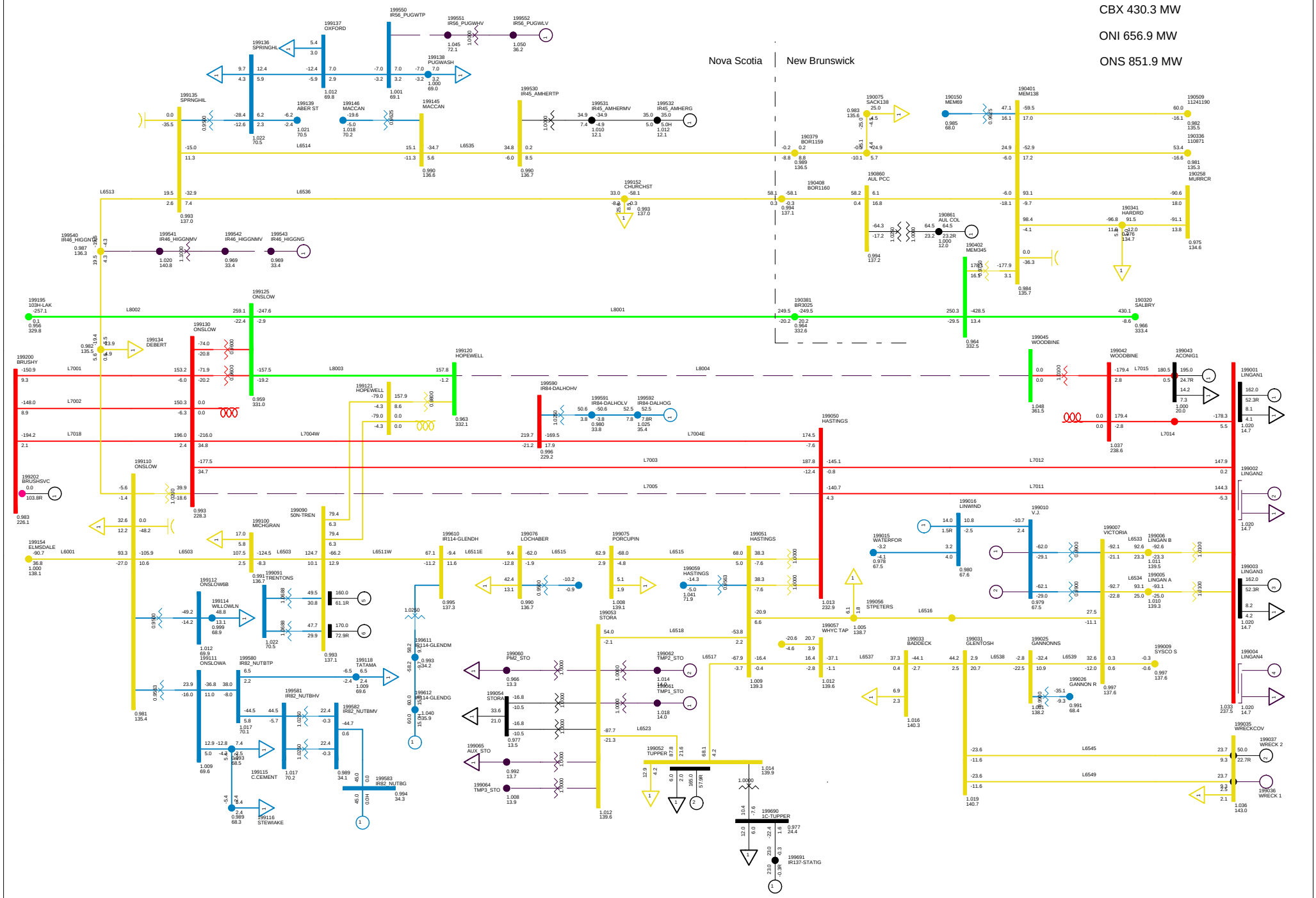

2013WP-NS-0
C61SS DCT ON STRAIT CROSSING L8004-L7005 WITH 2-UNIT SPS
NORTHEASTERN NS SUN, FEB 15 2009 16:13

Total Wind Gen: 290.1 MW
Gross Lingan 324.0 MW
Gross Pt Aconi 195.0 MW
Gross Tupper 165.0 MW
Gross Trenton 330.0 MW
Gross Tuft's Cove 390.8 MW
Gross Wreck Cove 50.0 MW
Gross Gas Turbine 24.0 MW
Gross Small Hydro 182.4 MW
Net Stora Load 33.7 MW
Total BMPC Load 75.5 MW

Bus - VOLTAGE (KV/PU)
Branch - MW/MVAR
Equipment - MW/MVAR
110.0%RATEB
1.050OV 0.950UV
KV: <=25.000 <=69.000 <=138.000 <=230.000 <=345.000 >345.000

Figure ___

NSX -282.6 MW

CBX 437.8 MW

ONI 678.4 MW

ONS 850.6 MW

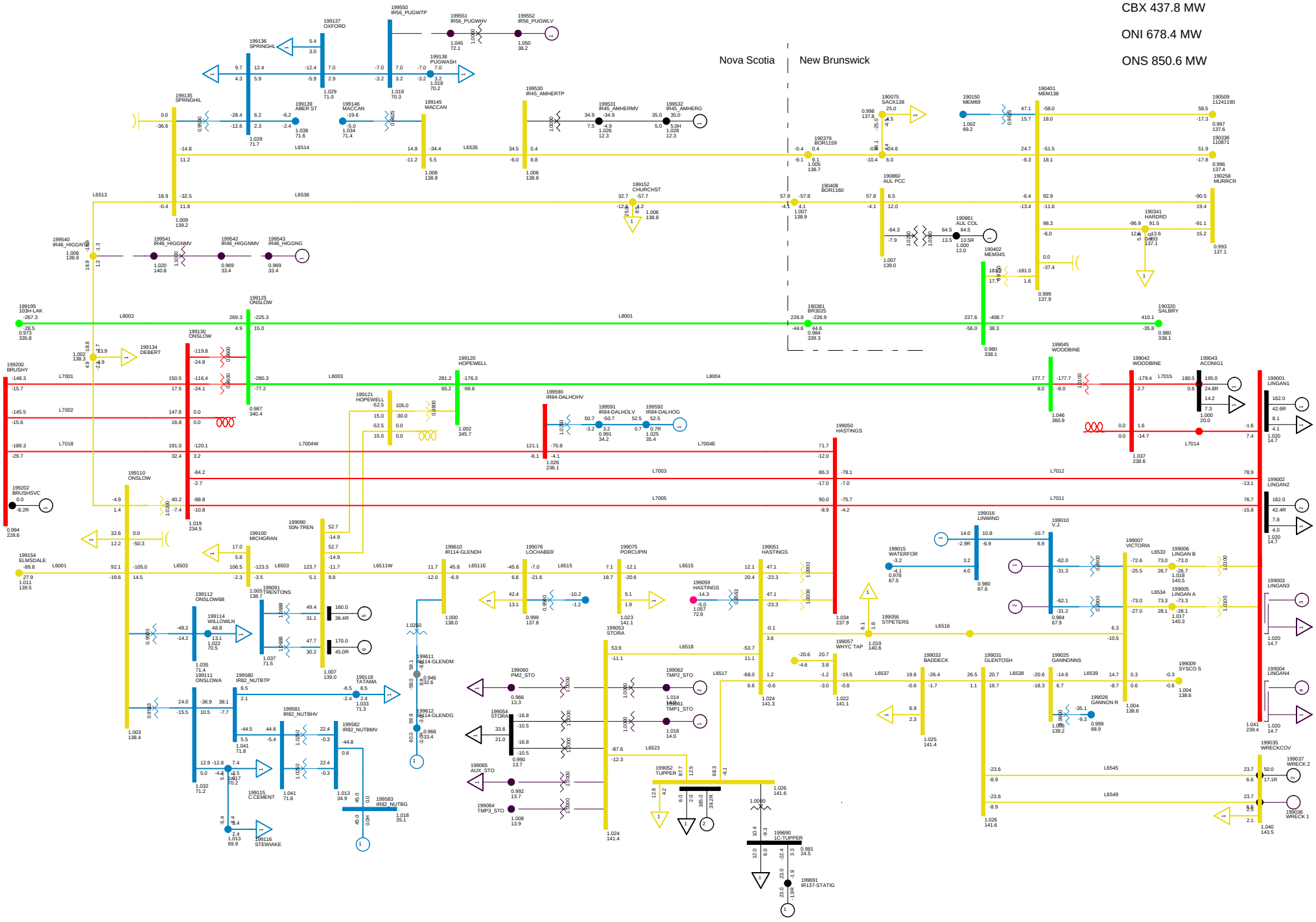

2013WP-NS-0
C62 FAULT ON BREAKER 88S-721 TRIPS LINGAN 3 AND 4
NORTHEASTERN NS SUN, FEB 15 2009 16:14

Total Wind Gen: 290.1 MW | Gross Tupper 165.0 MW | Gross Wreck Cove 50.0 MW | Net Stora Load 33.7 MW
Gross Lingan 324.0 MW | Gross Trenton 330.0 MW | Gross Gas Turbine 24.0 MW | Total BMPC Load 75.5 MW
Gross Pt Aconi 195.0 MW | Gross Tuft's Cove 390.8 MW | Gross Small Hydro 182.4 MW

Bus - VOLTAGE (KV/PU)
Branch - MW/MVAR
Equipment - MW/MVAR
110.0%RATEB
1.050OV 0.950UV
KV: <=25.000 <=69.000 <=138.000 <=230.000 <=345.000 >345.000

Figure ___

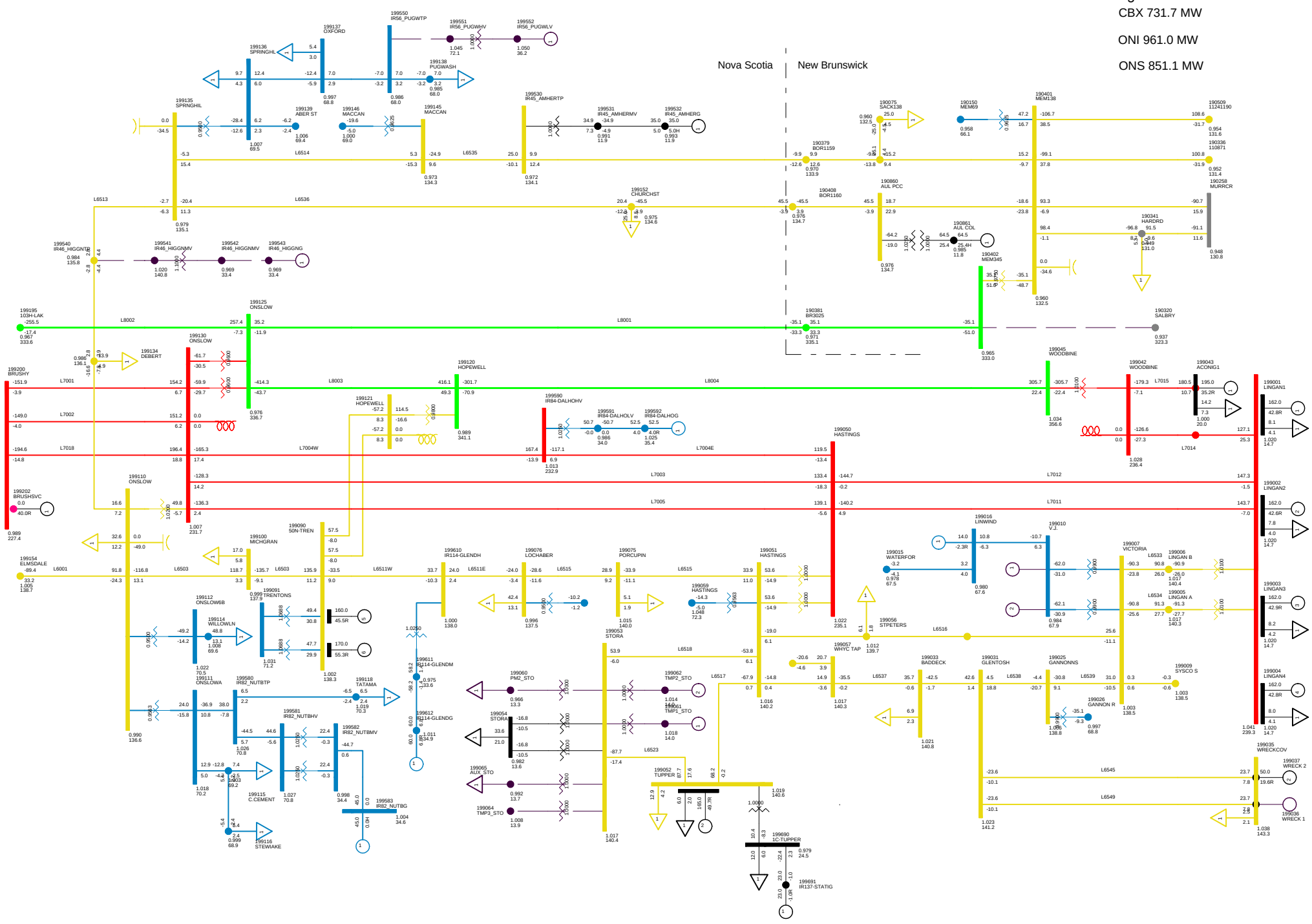

2013WP-NS-0
C63 FAULT ON SALISBURY SA3-2 TRIPS L3006 AND L3017
NORTHEASTERN NS SUN, FEB 15 2009 16:14

Total Wind Gen: 290.1 MW
Gross Tupper 165.0 MW
Gross Wreck Cove 50.0 MW
Net Stora Load 33.7 MW
Gross Lingan 648.0 MW
Gross Trenton 330.0 MW
Gross Gas Turbine 24.0 MW
Total BMPC Load 75.5 MW
Gross Pt Aconi 195.0 MW
Gross Tuft's Cove 390.8 MW
Gross Small Hydro 182.4 MW

Bus - VOLTAGE (KV/PU)
Branch - MW/MVAR
Equipment - MW/MVAR
110.0%RATE
1.050OV 0.950UV
KV: <=25.000 <=69.000 <=138.000 <=230.000 <=345.000 >345.000

Figure ___

NSX -0.3 MW

CBX 731.7 MW

ONI 960.9 MW

ONS 850.8 MW

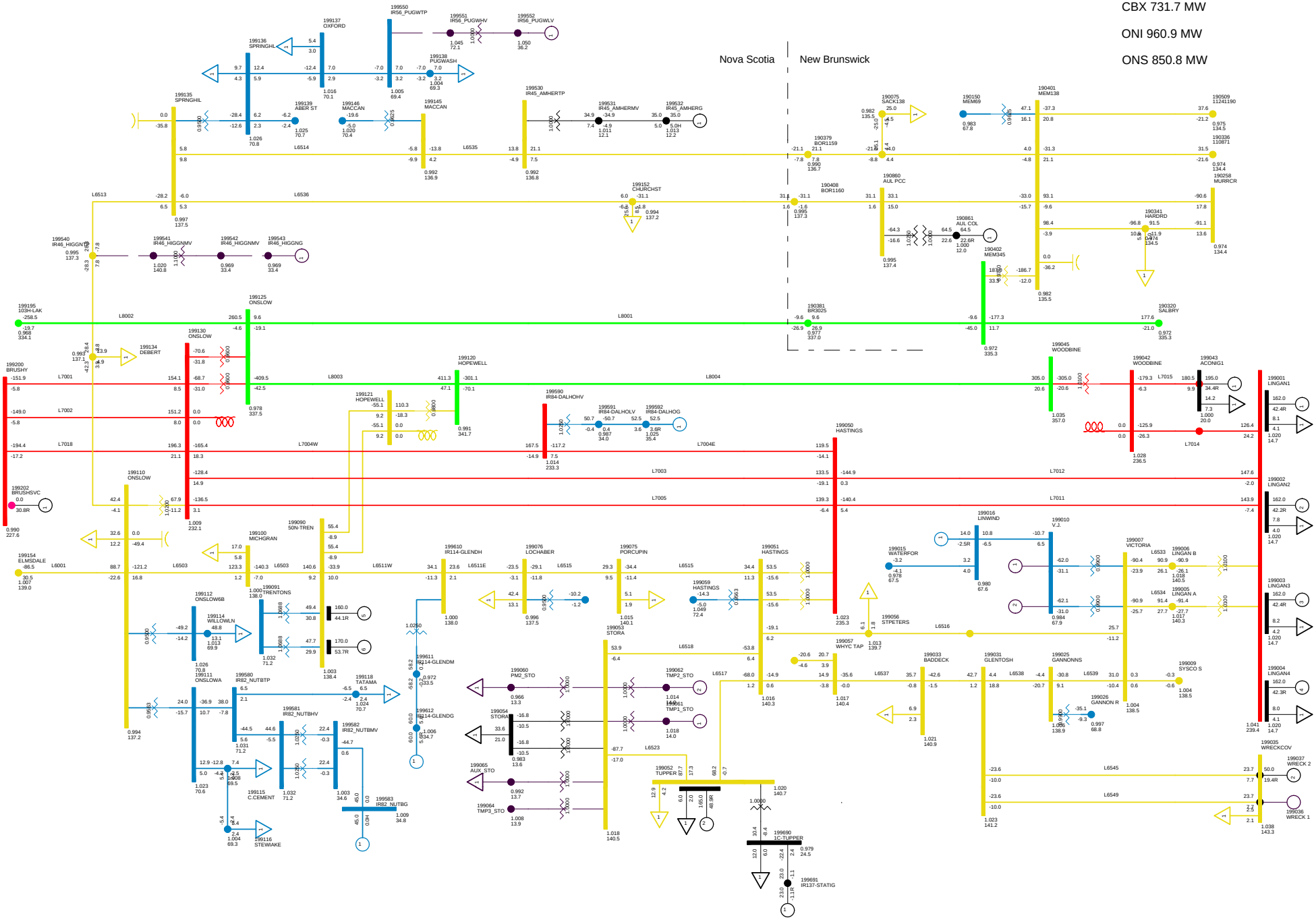

2013WP-NS-0
C64 FAULT ON BREAKER SALISBURY BREAKER SA3-4 TRIPS L3013 AND
NORTHEASTERN NS SUN, FEB 15 2009 16:14

Total Wind Gen: 290.1 MW
Gross Lingan 648.0 MW
Gross Pt Aconi 195.0 MW
Gross Tupper 165.0 MW
Gross Trenton 330.0 MW
Gross Tuft's Cove 390.8 MW
Gross Wreck Cove 50.0 MW
Gross Gas Turbine 24.0 MW
Gross Small Hydro 182.4 MW
Net Stora Load 33.7 MW
Total BMPC Load 75.5 MW

Bus - VOLTAGE (KV/PU)
Branch - MW/MVAR
Equipment - MW/MVAR
110.0%RATEB
1.050OV 0.950UV
KV: <=25.000 <=69.000 <=138.000 <=230.000 <=345.000 >345.000

Figure ____

NSX 199.8 MW
CBX 789.8 MW
ONI 1011.7 MW
ONS 700.3 MW

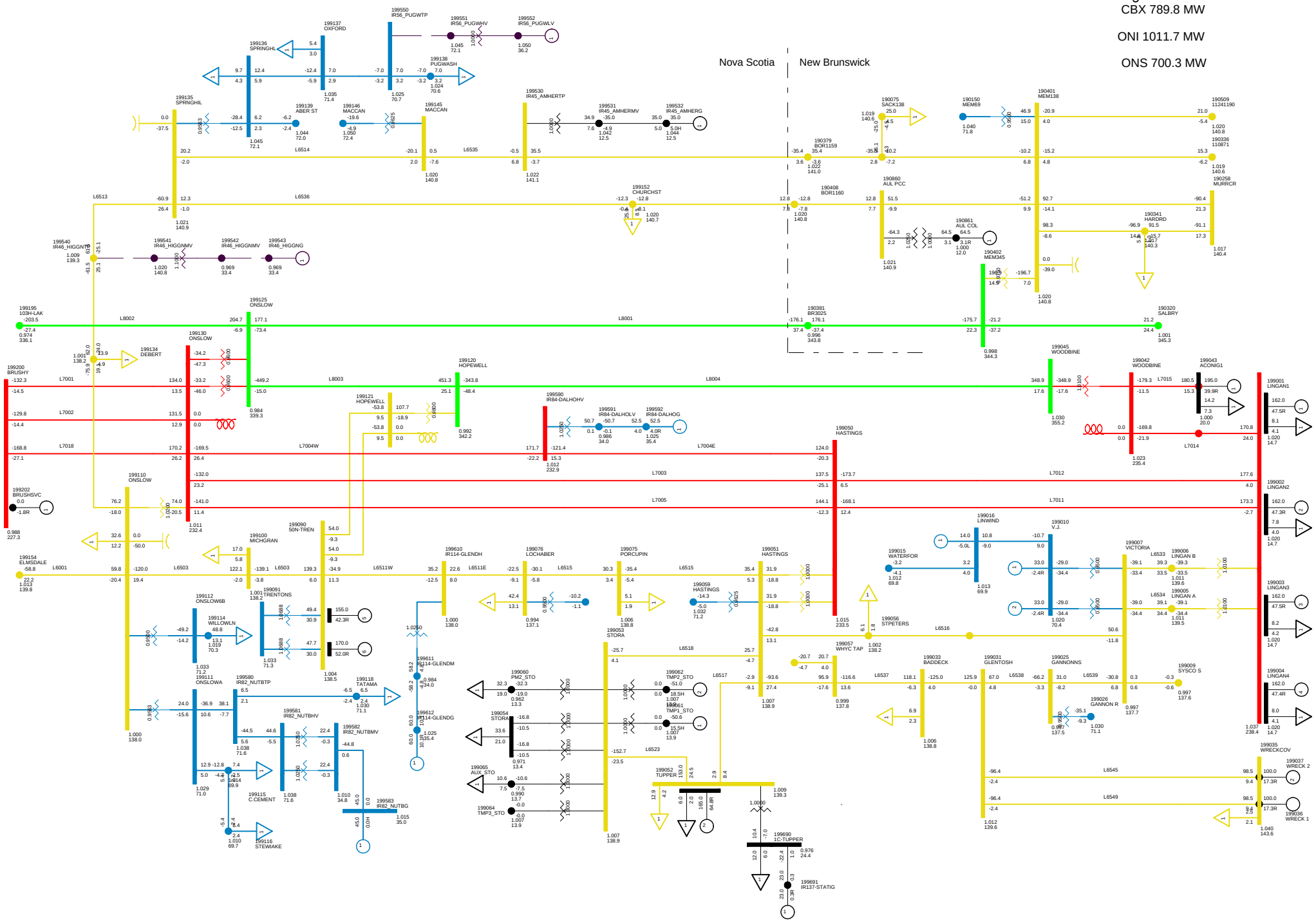

2013 WINTER PEAK WITH DSM - DELIVER RESERVE
NS-NB=200; NB-NE=500; CBX=790; ONI=1015 ONS=704
NORTHEASTERN NS WED, DEC 10 2008 9:45

Total Wind Gen: 290.1 MW | Gross Tupper 165.0 MW | Gross Wreck Cove 200.0 MW | Net Stora Load 178.4 MW
Gross Lingan 648.0 MW | Gross Trenton 325.0 MW | Gross Gas Turbine 210.0 MW | Total BMPC Load 108.5 MW
Gross Pt Aconi 195.0 MW | Gross Tuft's Cove 455.2 MW | Gross Small Hydro 182.4 MW

Bus - VOLTAGE (KV/PU)
Branch - MW/MVAR
Equipment - MW/MVAR
110.0%RATEB
1.0500V 0.950UV
KV: <=25.000 <=69.000 <=138.000 <=230.000 <=345.000 >345.000

Figure ___

NSX -98.1 MW

CBX 486.3 MW

ONI 712.8 MW

ONS 700.6 MW

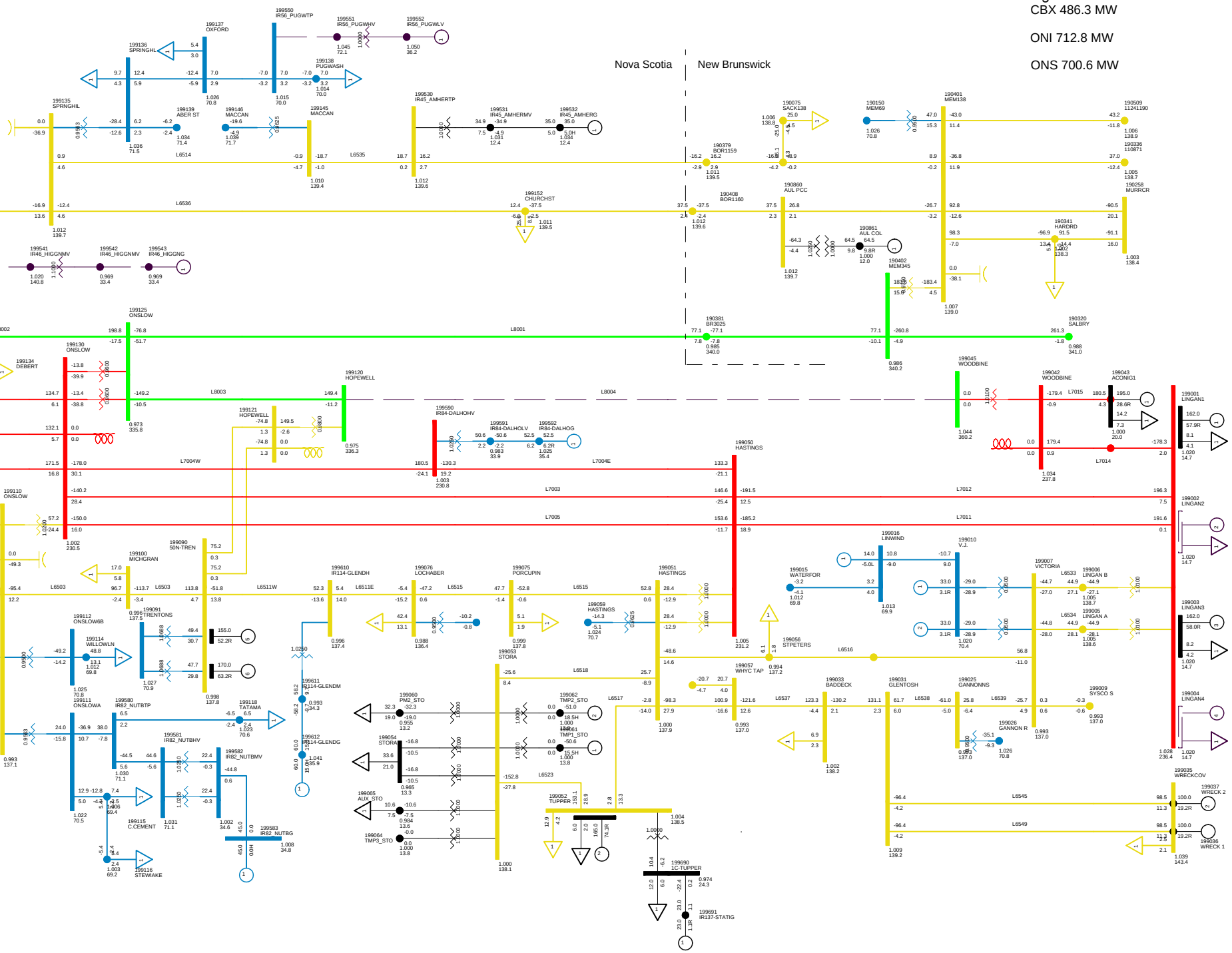

2013 WINTER PEAK NS EXPORT 200
C01SS LOSE L8004 WITH 2 UNIT SPS
NORTHEASTERN NS WED, DEC 10 2008 9:46

Total Wind Gen: 290.1 MW
Gross Lingan 324.0 MW
Gross Pt Aconi 195.0 MW
Gross Tupper 165.0 MW
Gross Trenton 325.0 MW
Gross Tuft's Cove 455.2 MW
Gross Wreck Cove 200.0 MW
Gross Gas Turbine 210.0 MW
Gross Small Hydro 182.4 MW
Net Stora Load 178.4 MW
Total BMPC Load 108.5 MW

Bus - VOLTAGE (KV/PU)
Branch - MW/MVAR
Equipment - MW/MVAR
110.0%RATEB
1.050OV 0.950UV
KV: <=25.000 <=69.000 <=138.000 <=230.000 <=345.000 >345.000

Figure ___

NSX -102.5 MW

CBX 491.2 MW

ONI 709.9 MW

ONS 701.7 MW

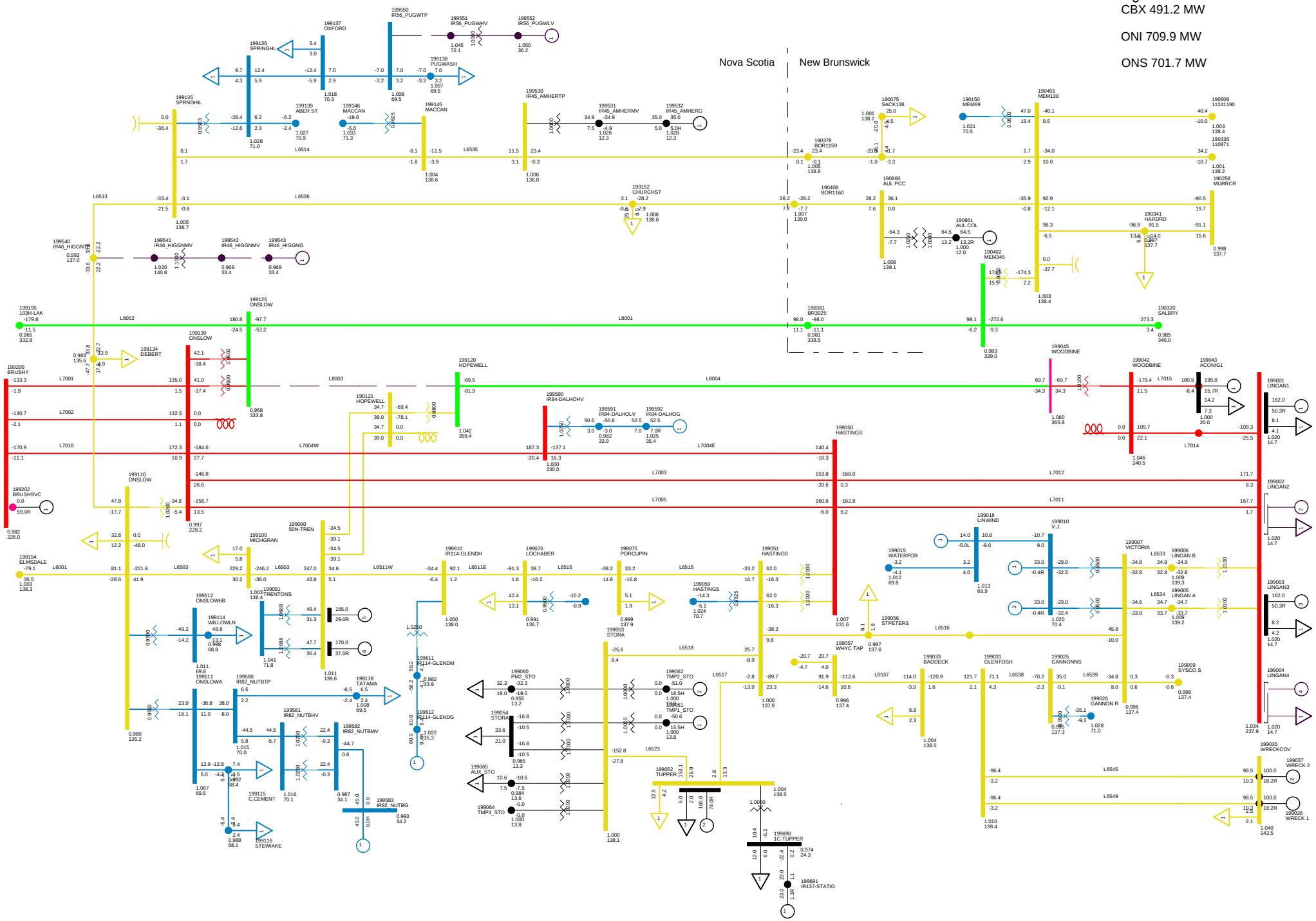

2013 WINTER PEAK NS EXPORT 200
C02SS LOSE L8003 WITH 2-UNIT SPS
NORTHEASTERN NS WED, DEC 10 2008 9:46

Total Wind Gen: 290.1 MW | Gross Tupper 165.0 MW | Gross Wreck Cove 200.0 MW | Net Stora Load 178.4 MW
Gross Lingan 324.0 MW | Gross Trenton 325.0 MW | Gross Gas Turbine 210.0 MW | Total BMPC Load 108.5 MW
Gross Pt Aconi 195.0 MW | Gross Tuft's Cove 455.2 MW | Gross Small Hydro 182.4 MW

Bus - VOLTAGE (KV/PU)
Branch - MW/MVAR
Equipment - MW/MVAR
110.0%RATEB
1.050UV 0.950UV
KV: <=25.000 <=69.000 <=138.000 <=230.000 <=345.000 >345.000

Figure ___

NSX 191.5 MW

CBX 789.3 MW

ONI 1010.5 MW

ONS 707.8 MW

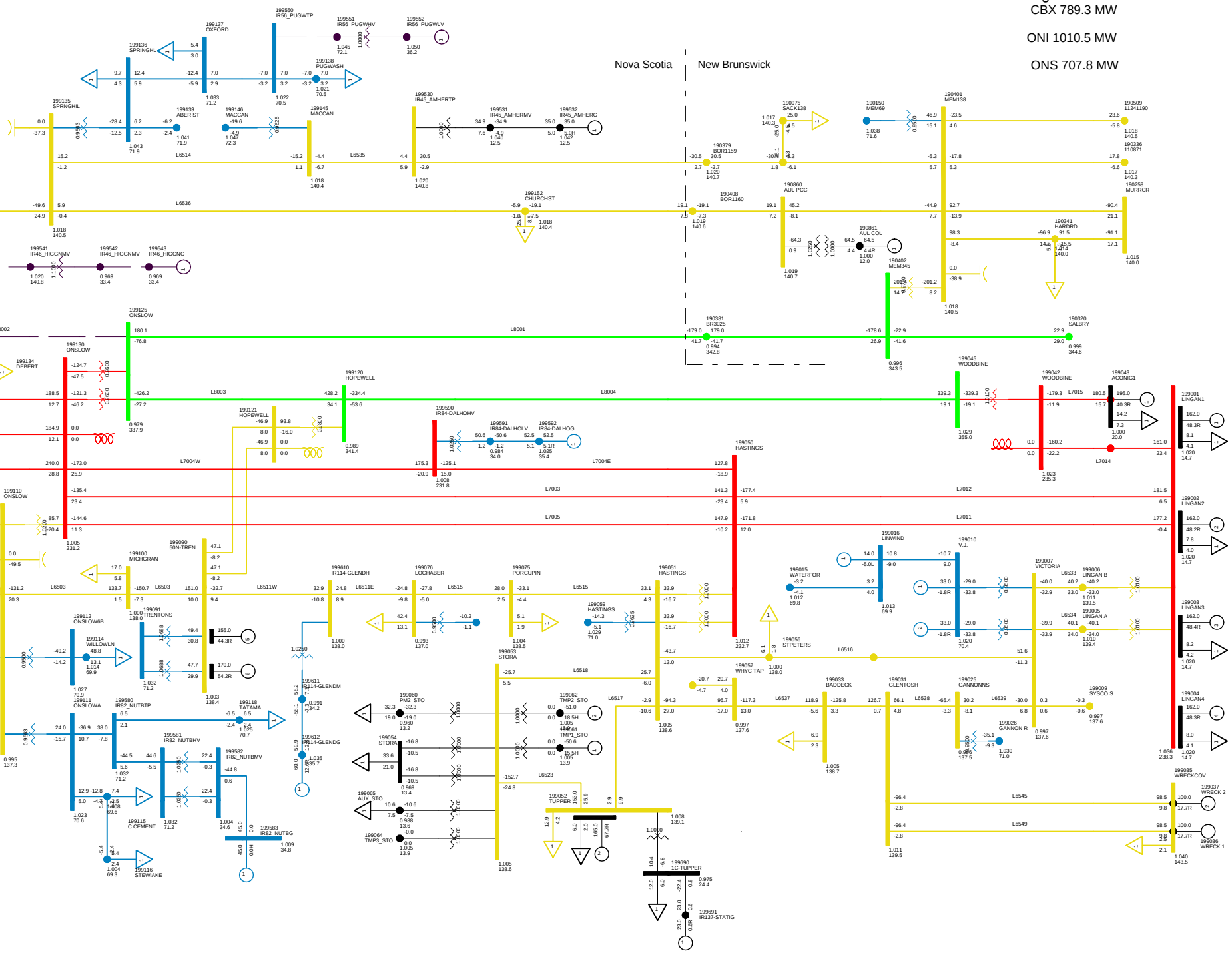

2013 WINTER PEAK NS EXPORT 200
C03 LOSE L8002
NORTHEASTERN NS WED, DEC 10 2008 9:46

Total Wind Gen: 290.1 MW
Gross Lingan 648.0 MW
Gross Pt Aconi 195.0 MW
Gross Tupper 165.0 MW
Gross Trenton 325.0 MW
Gross Tuft's Cove 455.2 MW
Gross Wreck Cove 200.0 MW
Gross Gas Turbine 210.0 MW
Gross Small Hydro 182.4 MW
Net Stora Load 178.4 MW
Total BMPC Load 108.5 MW

Bus - VOLTAGE (KV/PU)
Branch - MW/MVAR
Equipment - MW/MVAR
110.0%RATEB
1.050OV 0.950UV
KV: <=25.000 <=69.000 <=138.000 <=230.000 <=345.000 >345.000

Figure ___

NSX 59.0 MW

CBX 644.6 MW

ONI 873.1 MW

ONS 700.2 MW

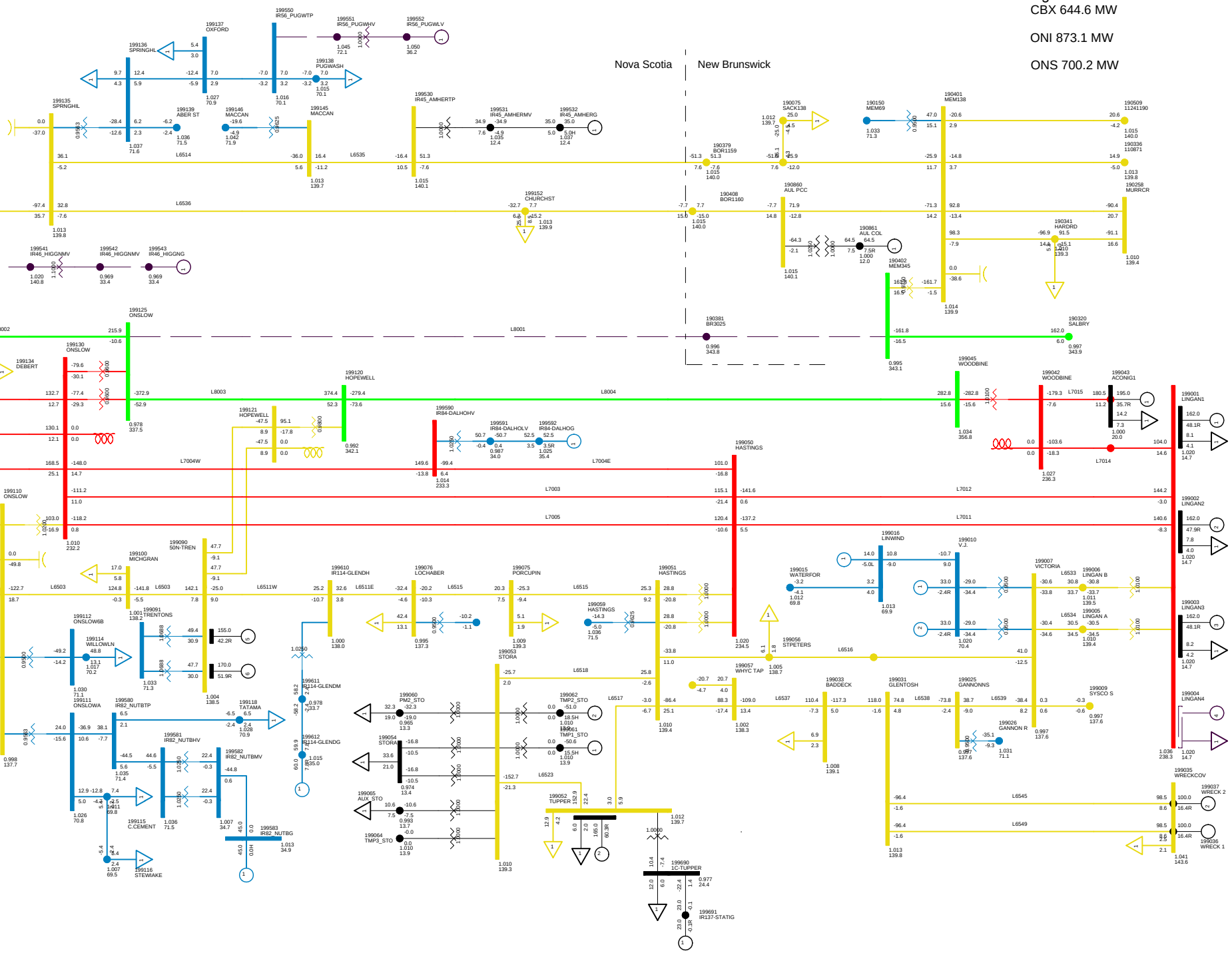

2013 WINTER PEAK NS EXPORT 200
C04S LOSE L8001 SPS TRIPS 1 LINGAN UNIT
NORTHEASTERN NS WED, DEC 10 2008 9:46

Total Wind Gen: 290.1 MW | Gross Tupper 165.0 MW | Gross Wreck Cove 200.0 MW | Net Stora Load 178.4 MW
Gross Lingan 486.0 MW | Gross Trenton 325.0 MW | Gross Gas Turbine 210.0 MW | Total BMPC Load 108.5 MW
Gross Pt Aconi 195.0 MW | Gross Tuft's Cove 455.2 MW | Gross Small Hydro 182.4 MW

Bus - VOLTAGE (KV/PU)
Branch - MW/MVAR
Equipment - MW/MVAR
110.0%RATEB
1.050OV 0.950UV
KV: <=25.000 <=69.000 <=138.000 <=230.000 <=345.000 >345.000

Figure ___

NSX 199.8 MW
CBX 789.8 MW
ONI 1011.7 MW
ONS 700.3 MW

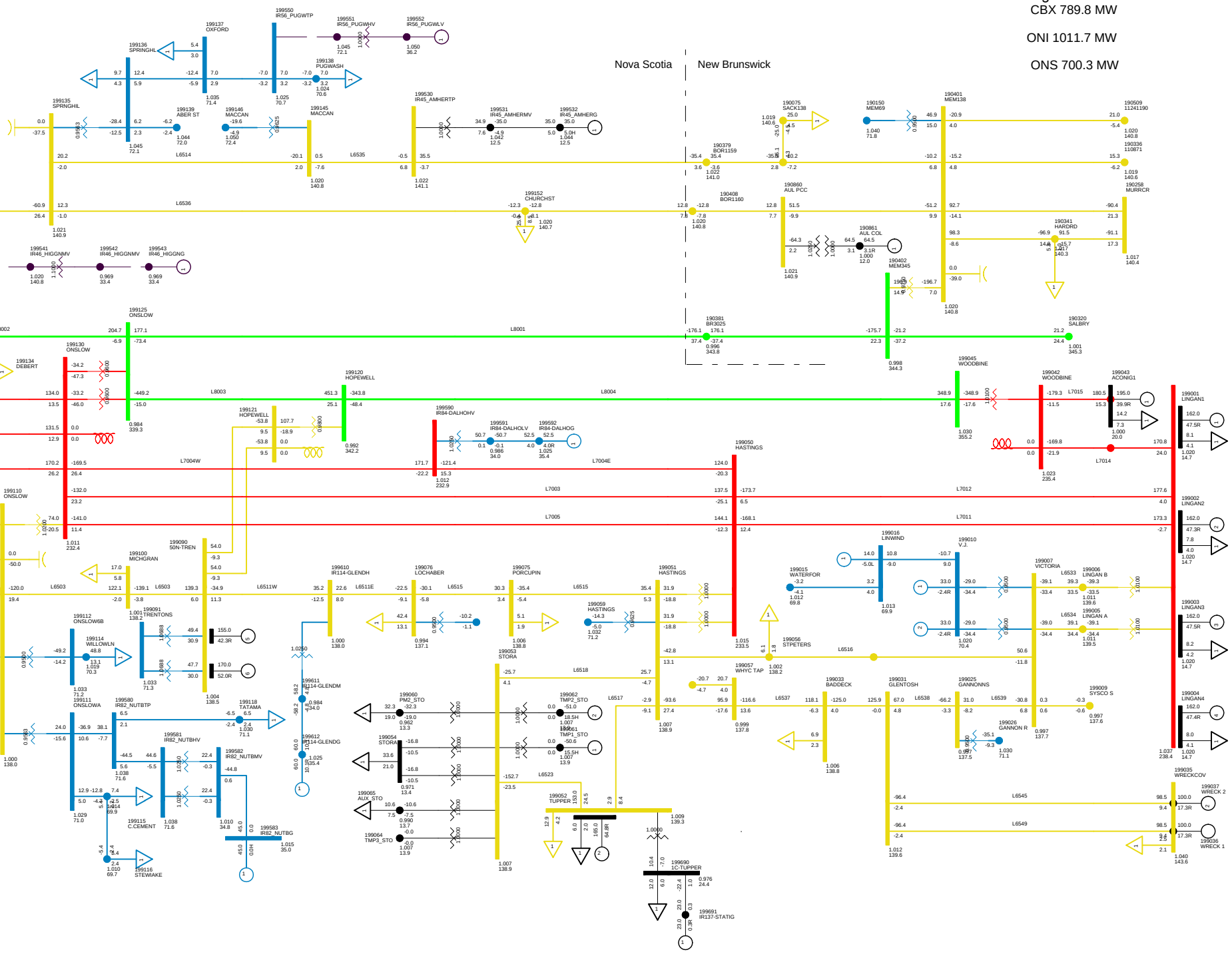

2013 WINTER PEAK WITH DSM - DELIVER RESERVE
NS-NB=200; NB-NE=500; CBX=790; ONI=1015 ONS=704
NORTHEASTERN NS WED, DEC 10 2008 9:46

Total Wind Gen: 290.1 MW
Gross Lingan 648.0 MW
Gross Pt Aconi 195.0 MW
Gross Tupper 165.0 MW
Gross Trenton 325.0 MW
Gross Tuft's Cove 455.2 MW
Gross Wreck Cove 200.0 MW
Gross Gas Turbine 210.0 MW
Gross Small Hydro 182.4 MW
Total Stora Load 178.4 MW
Total BMPC Load 108.5 MW

Bus - VOLTAGE (KV/PU)
Branch - MW/MVAR
Equipment - MW/MVAR
110.0%RATEB
1.050OV 0.950UV
KV: <=25.000 <=69.000 <=138.000 <=230.000 <=345.000 >345.000

Figure ___

NSX 193.7 MW

CBX 783.0 MW

ONI 1005.5 MW

ONS 700.3 MW

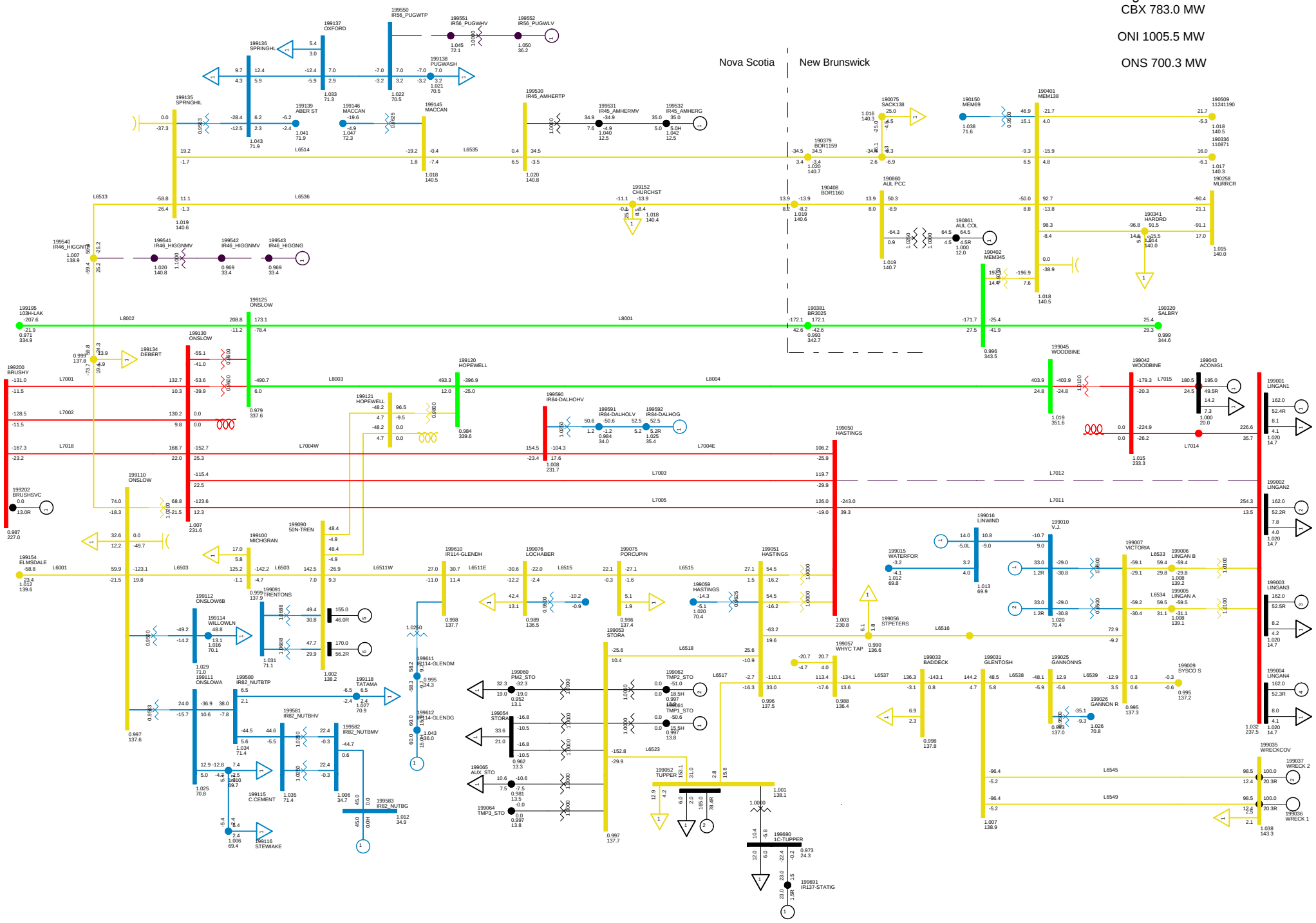

2013 WINTER PEAK NS EXPORT 200
C05 LOSE L7012 NO SPS
NORTHEASTERN NS WED, DEC 10 2008 9:46

Total Wind Gen: 290.1 MW | Gross Tupper 165.0 MW | Gross Wreck Cove 200.0 MW | Net Stora Load 178.4 MW
Gross Lingan 648.0 MW | Gross Trenton 325.0 MW | Gross Gas Turbine 210.0 MW | Total BMPC Load 108.5 MW
Gross Pt Aconi 195.0 MW | Gross Tuft's Cove 455.2 MW | Gross Small Hydro 182.4 MW

Bus - VOLTAGE (KV/PU)
Branch - MW/MVAR
Equipment - MW/MVAR
110.0%RATEB
1.050OV 0.950UV
KV: <=25.000 <=69.000 <=138.000 <=230.000 <=345.000 >345.000

Figure ___

NSX 196.6 MW

CBX 786.0 MW

ONI 1008.4 MW

ONS 700.3 MW

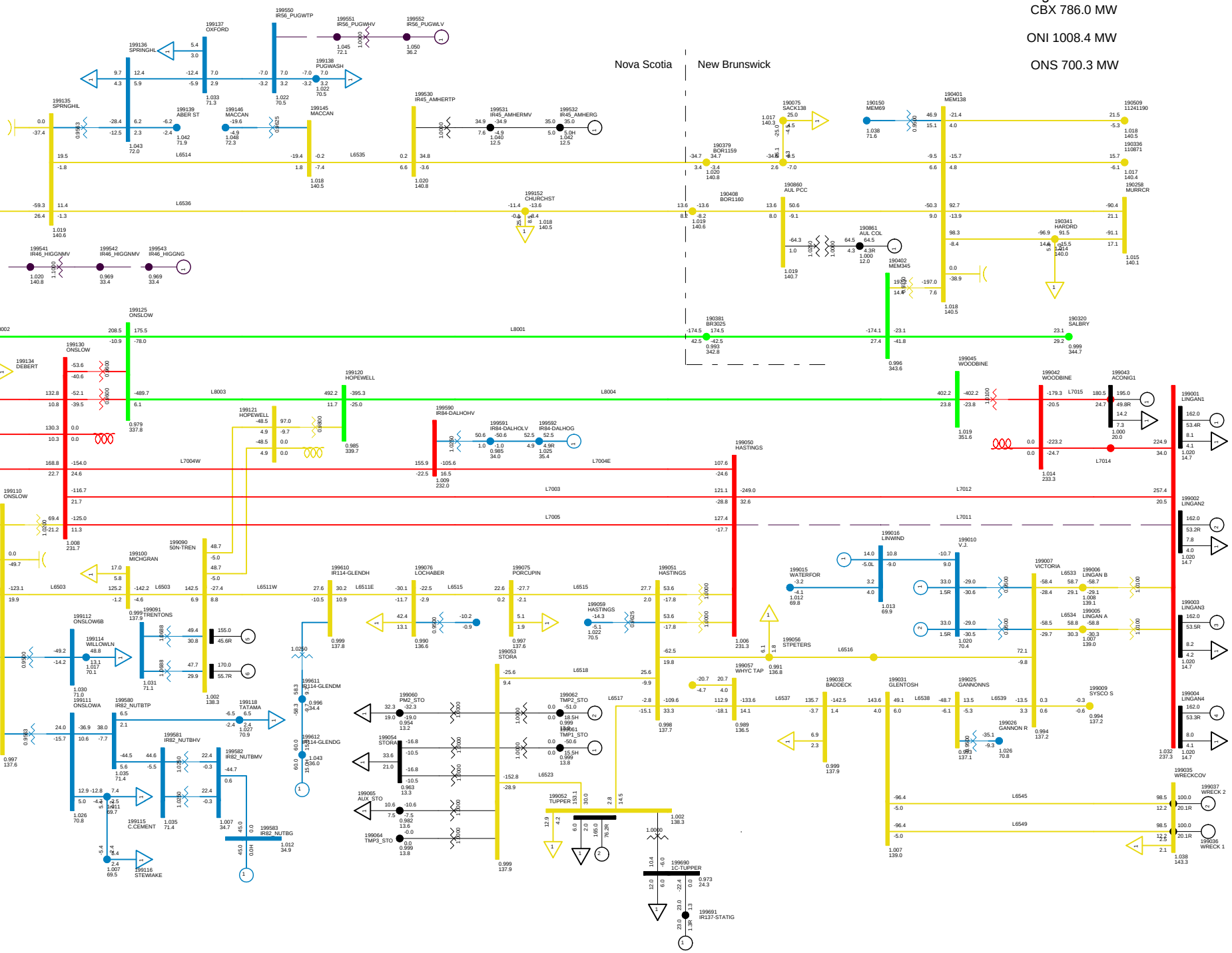

2013 WINTER PEAK NS EXPORT 200
C06 LOSE L7011
NORTHEASTERN NS WED, DEC 10 2008 9:46

Total Wind Gen: 290.1 MW | Gross Tupper 165.0 MW | Gross Wreck Cove 200.0 MW | Total Stora Load 178.4 MW
Gross Lingan 648.0 MW | Gross Trenton 325.0 MW | Gross Gas Turbine 210.0 MW | Total BMPC Load 108.5 MW
Gross Pt Aconi 195.0 MW | Gross Tuft's Cove 455.2 MW | Gross Small Hydro 182.4 MW

Bus - VOLTAGE (KV/PU)
Branch - MW/MVAR
Equipment - MW/MVAR
110.0%RATEB
1.050OV 0.950UV
KV: <=25.000 <=69.000 <=138.000 <=230.000 <=345.000 >345.000

Figure ___

NSX 193.1 MW
CBX 790.9 MW
ONI 1005.0 MW
ONS 700.4 MW

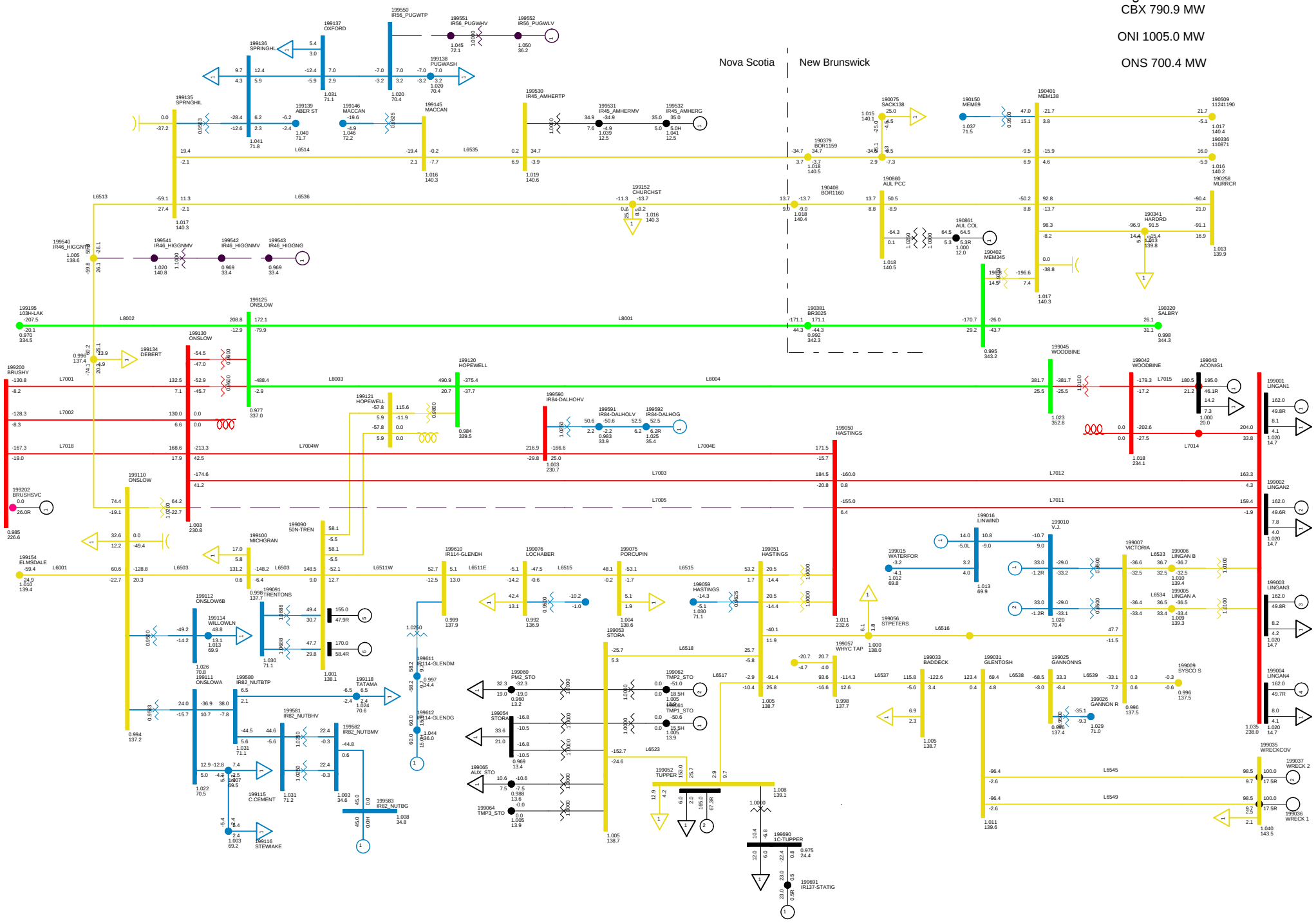

2013 WINTER PEAK NS EXPORT 200
C07 LOSE L7005
NORTHEASTERN NS WED, DEC 10 2008 9:47

Total Wind Gen: 290.1 MW
Gross Lingan 648.0 MW
Gross Pt Aconi 195.0 MW
Gross Tupper 165.0 MW
Gross Trenton 325.0 MW
Gross Tuft's Cove 455.2 MW
Gross Wreck Cove 200.0 MW
Gross Gas Turbine 210.0 MW
Gross Small Hydro 182.4 MW
Net Stora Load 178.4 MW
Total BMPC Load 108.5 MW

Bus - VOLTAGE (KV/PU)
Branch - MW/MVAR
Equipment - MW/MVAR
110.0%RATEB
1.050OV 0.950UV
KV: <=25.000 <=69.000 <=138.000 <=230.000 <=345.000 >345.000

Figure ___

NSX 196.3 MW

CBX 789.9 MW

ONI 1011.8 MW

ONS 704.0 MW

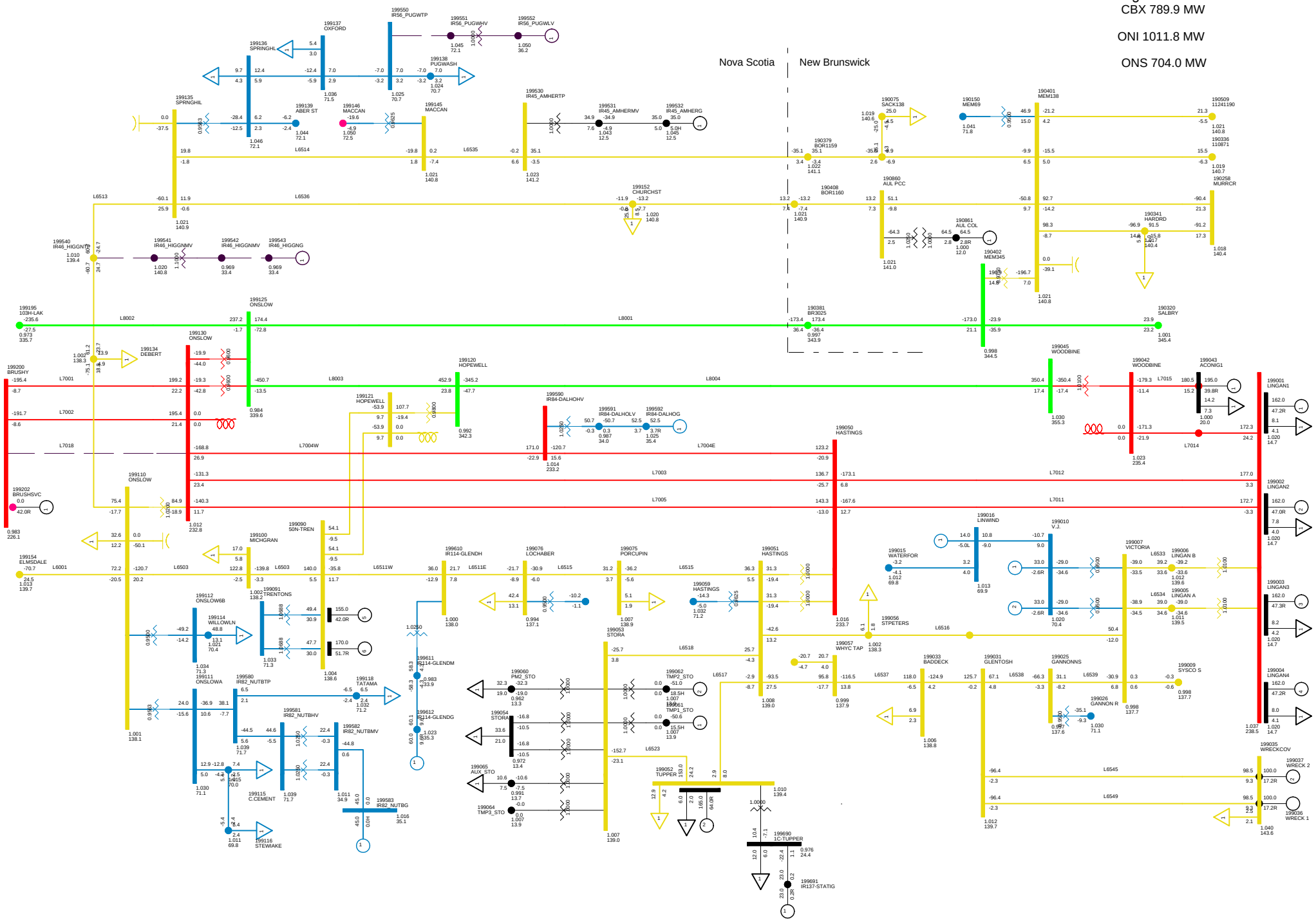

2013 WINTER PEAK NS EXPORT 200
C08 LOSE L7018
NORTHEASTERN NS WED, DEC 10 2008 9:47

Total Wind Gen: 290.1 MW | Gross Tupper 165.0 MW | Gross Wreck Cove 200.0 MW | Net Stora Load 178.4 MW
Gross Lingan 648.0 MW | Gross Trenton 325.0 MW | Gross Gas Turbine 210.0 MW | Total BMPC Load 108.5 MW
Gross Pt Aconi 195.0 MW | Gross Tuft's Cove 455.2 MW | Gross Small Hydro 182.4 MW

Bus - VOLTAGE (KV/PU)
Branch - MW/MVAR
Equipment - MW/MVAR
110.0%RATEB
1.050OV 0.950UV
KV: <=25.000 <=69.000 <=138.000 <=230.000 <=345.000 >345.000

Figure ___

Total Wind Gen: 290.1 MW | Gross Tupper 165.0 MW | Gross Wreck Cove 200.0 MW

Gross Lingan 648.0 MW | Gross Trenton 325.0 MW | Gross Gas Turbine 210.0 MW

Gross Pt Aconi 195.0 MW | Gross Tuft's Cove 455.2 MW | Gross Small Hydro 182.4 MW

Net Stora Load 178.4 MW | Total BMPC Load 108.5 MW

NSX 197.3 MW

CBX 789.8 MW

ONI 1011.6 MW

ONS 702.8 MW

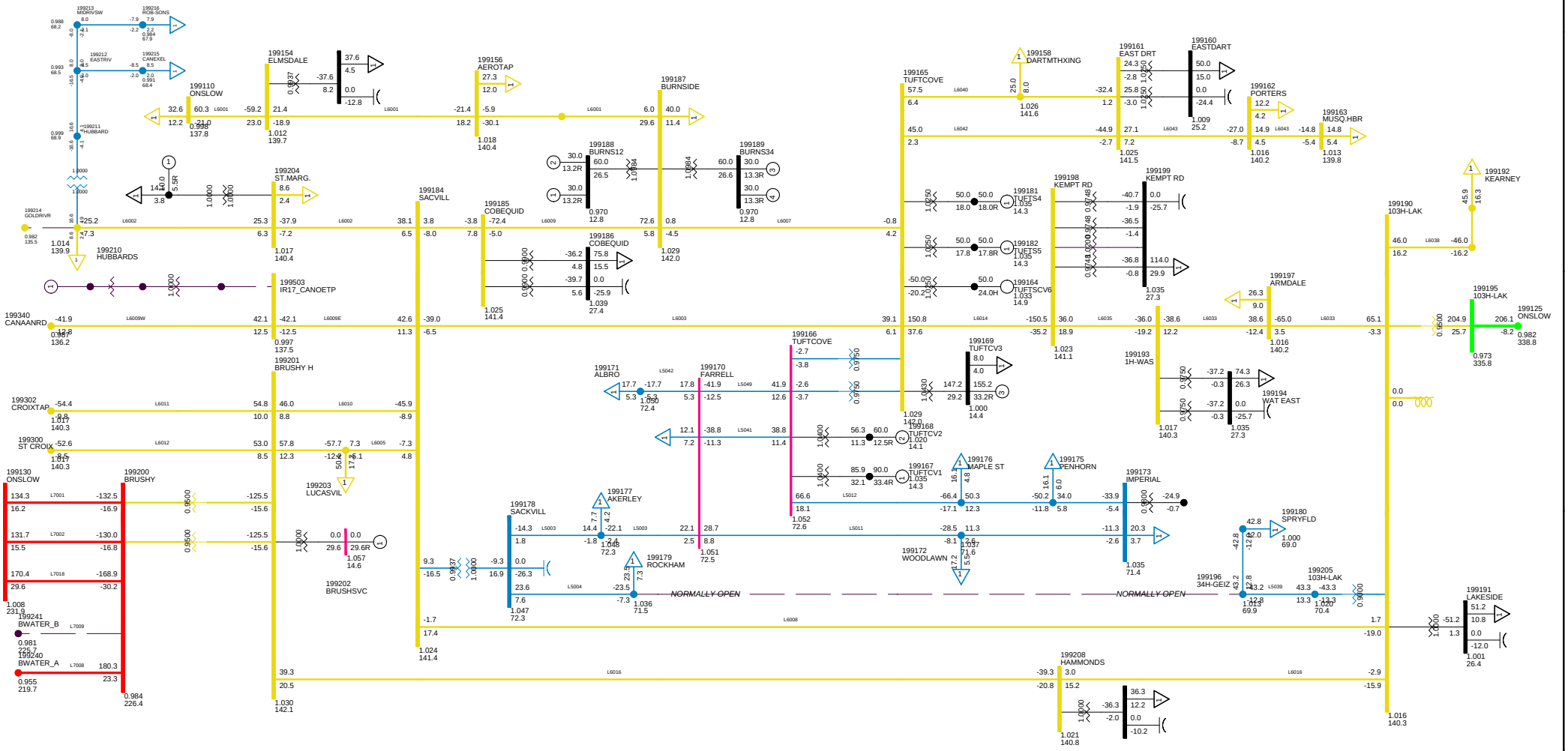

2013 WINTER PEAK NS EXPORT 200
C09 LOSE L7009
METRO ZONE WED, DEC 10 2008 9:47

Bus - VOLTAGE (KV/PU)
Branch - MW/MVAR
Equipment - MW/MVAR
100.0%RATE8
1.050OV 0.950UV
KV: <=30.000 <=69.000 <=138.000 <=230.000 <=345.000 >345.000

Figure __

NSX 193.7 MW

CBX 791.1 MW

ONI 1005.6 MW

ONS 700.4 MW

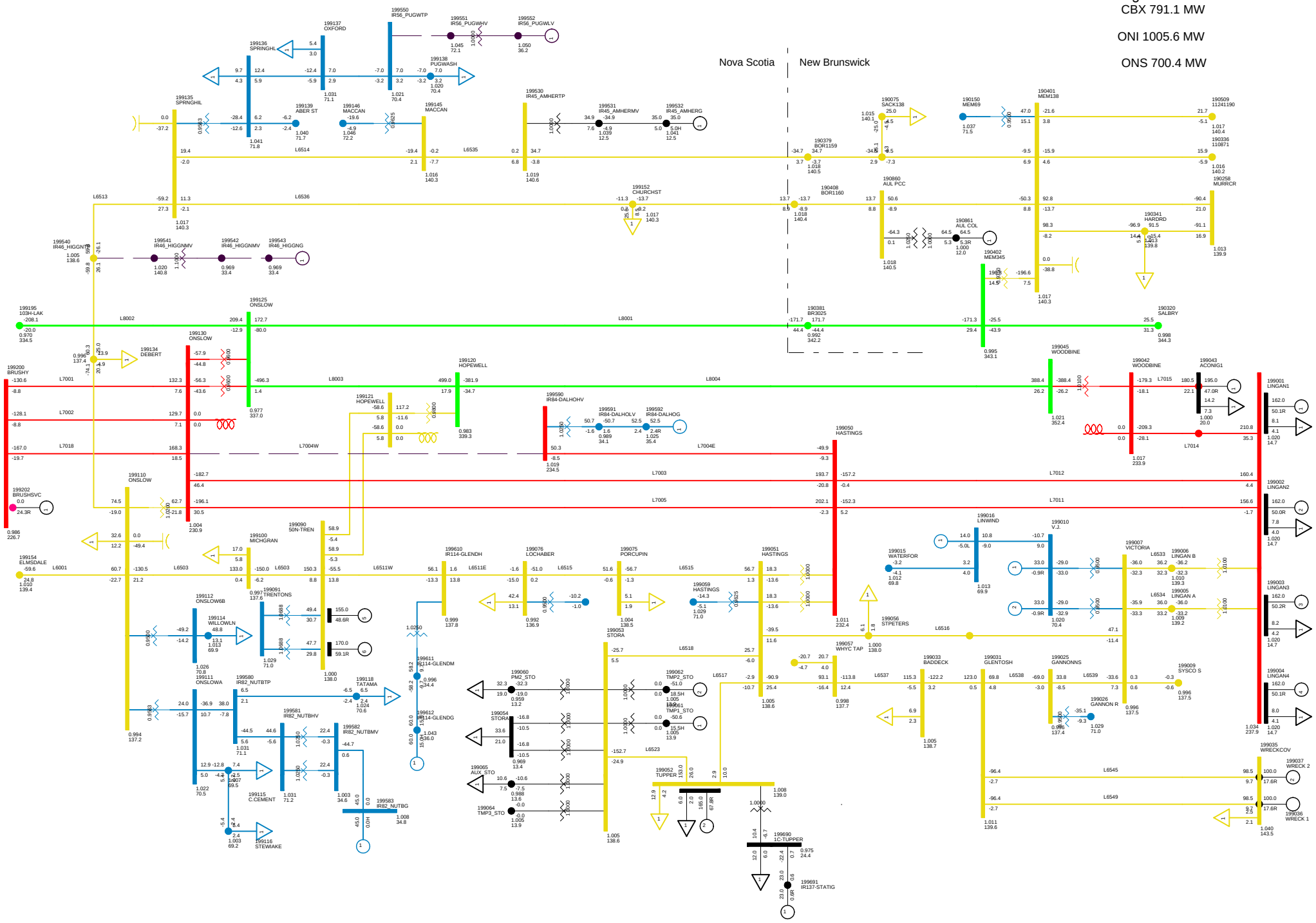

2013 WINTER PEAK NS EXPORT 200
C10 LOSE L7004 WEST
NORTHEASTERN NS WED, DEC 10 2008 9:47

Total Wind Gen: 290.1 MW | Gross Tupper 165.0 MW | Gross Wreck Cove 200.0 MW | Net Stora Load 178.4 MW
Gross Lingan 648.0 MW | Gross Trenton 325.0 MW | Gross Gas Turbine 210.0 MW | Total BMPC Load 108.5 MW
Gross Pt Aconi 195.0 MW | Gross Tuft's Cove 455.2 MW | Gross Small Hydro 182.4 MW

Bus - VOLTAGE (KV/PU)
Branch - MW/MVAR
Equipment - MW/MVAR
110.0%RATEB
1.050UV 0.950UV
KV: <=25.000 <=69.000 <=138.000 <=230.000 <=345.000 >345.000

Figure ___

NSX 181.9 MW
CBX 779.0 MW
ONI 994.1 MW
ONS 700.5 MW

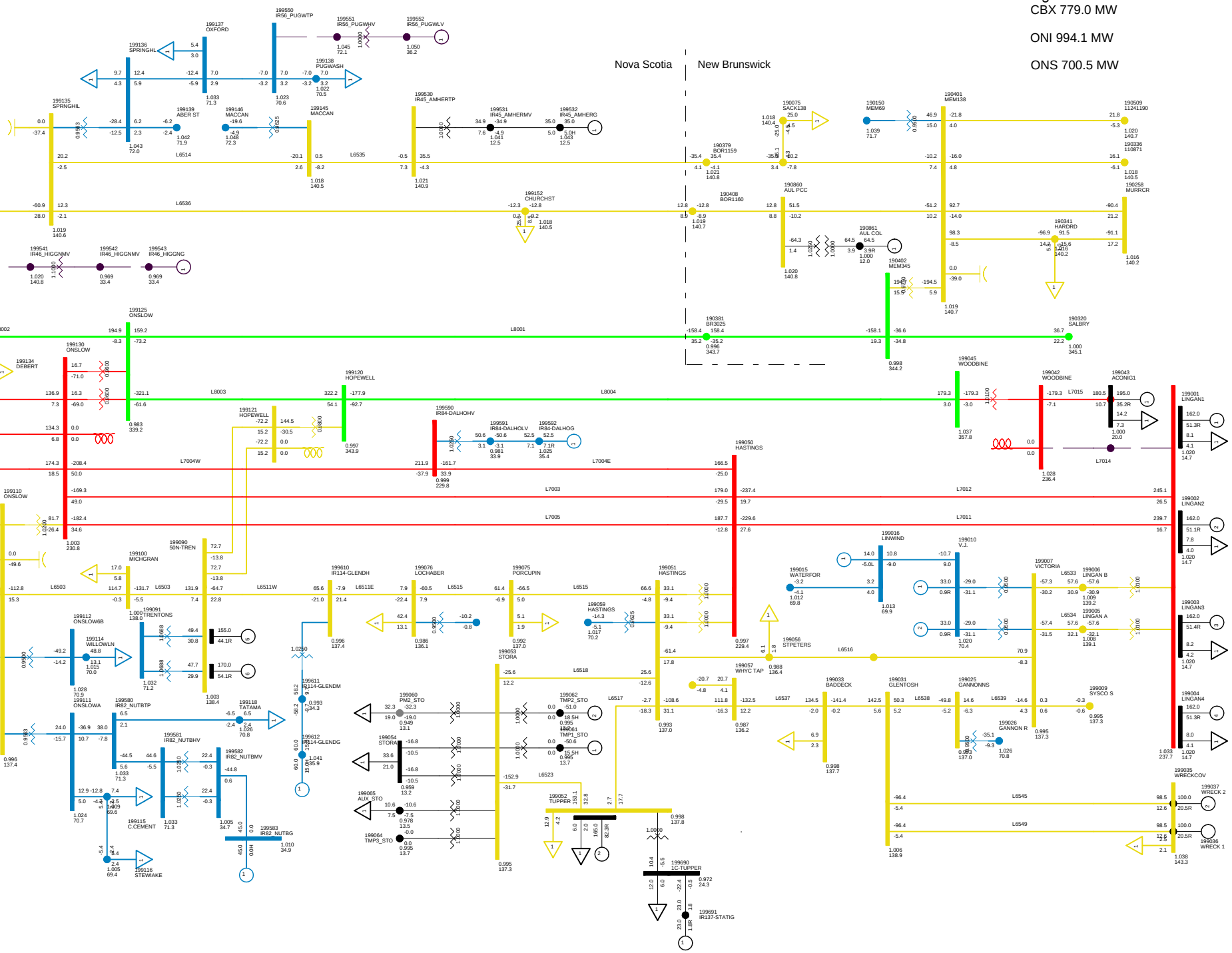

2013 WINTER PEAK NS EXPORT 200
C11 LOSE L7014
NORTHEASTERN NS WED, DEC 10 2008 9:47

Total Wind Gen: 290.1 MW
Gross Tupper 165.0 MW
Gross Wreck Cove 200.0 MW
Net Stora Load 178.4 MW
Gross Lingan 648.0 MW
Gross Trenton 325.0 MW
Gross Gas Turbine 210.0 MW
Total BMPC Load 108.5 MW
Gross Pt Aconi 195.0 MW
Gross Tuft's Cove 455.2 MW
Gross Small Hydro 182.4 MW

Bus - VOLTAGE (KV/PU)
Branch - MW/MVAR
Equipment - MW/MVAR
110.0%RATEB
1.050OV 0.950UV
KV: <=25.000 <=69.000 <=138.000 <=230.000 <=345.000 >345.000

Figure ___

NSX 199.8 MW
CBX 789.8 MW
ONI 1011.7 MW
ONS 700.3 MW

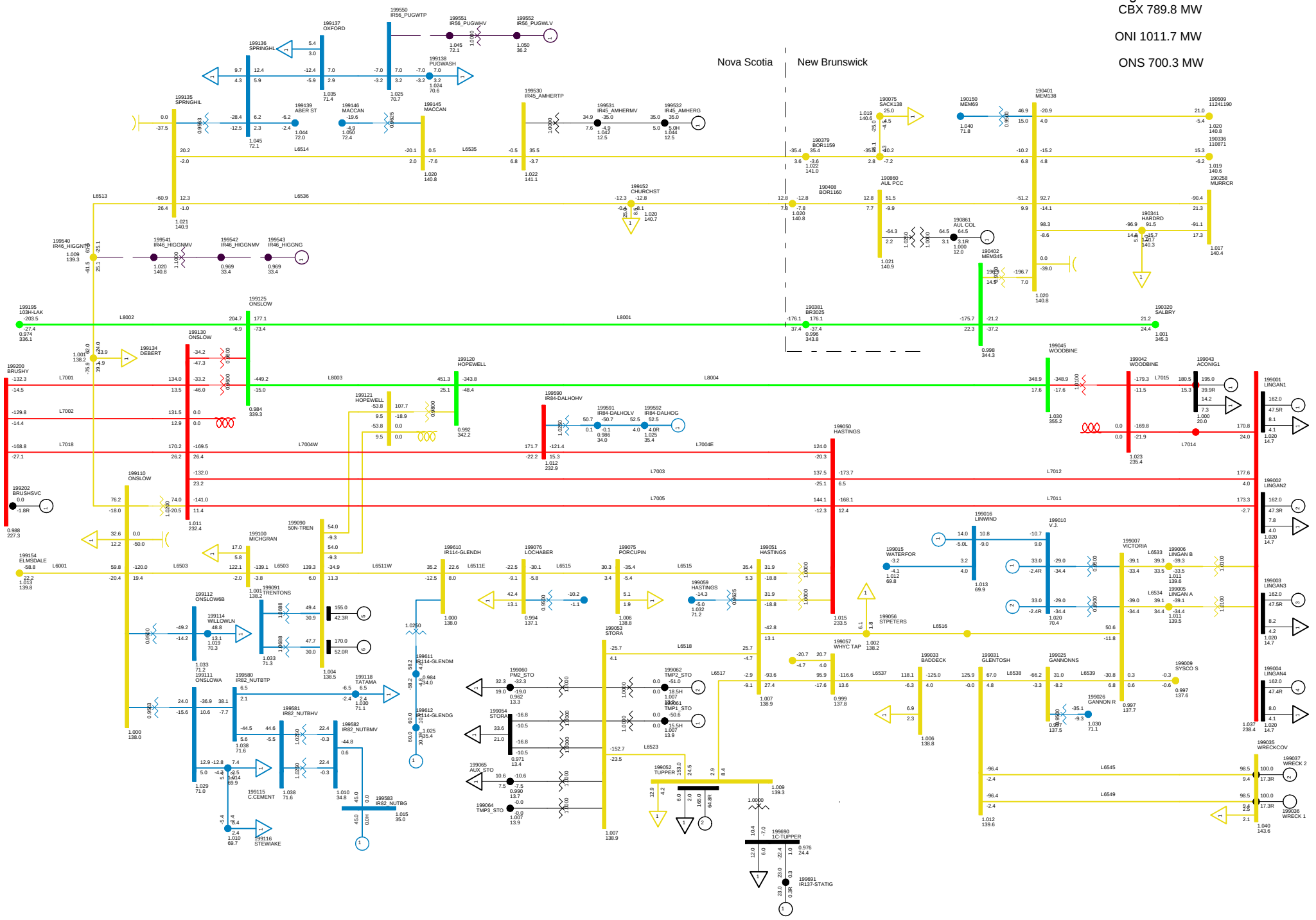

2013 WINTER PEAK WITH DSM - DELIVER RESERVE
NS-NB=200; NB-NE=500; CBX=790; ONI=1015 ONS=704
NORTHEASTERN NS WED, DEC 10 2008 9:47

Total Wind Gen: 290.1 MW
Gross Lingan 648.0 MW
Gross Pt Aconi 195.0 MW
Gross Tupper 165.0 MW
Gross Trenton 325.0 MW
Gross Tuft's Cove 455.2 MW
Gross Wreck Cove 200.0 MW
Gross Gas Turbine 210.0 MW
Gross Small Hydro 182.4 MW
Total Stora Load 178.4 MW
Total BMPC Load 108.5 MW

Bus - VOLTAGE (KV/PU)
Branch - MW/MVAR
Equipment - MW/MVAR
110.0%RATEB
1.0500V 0.9500V
KV: <=25.000 <=69.000 <=138.000 <=230.000 <=345.000 >345.000

Figure ___

NSX 214.5 MW

CBX 789.4 MW

ONI 1025.8 MW

ONS 700.1 MW

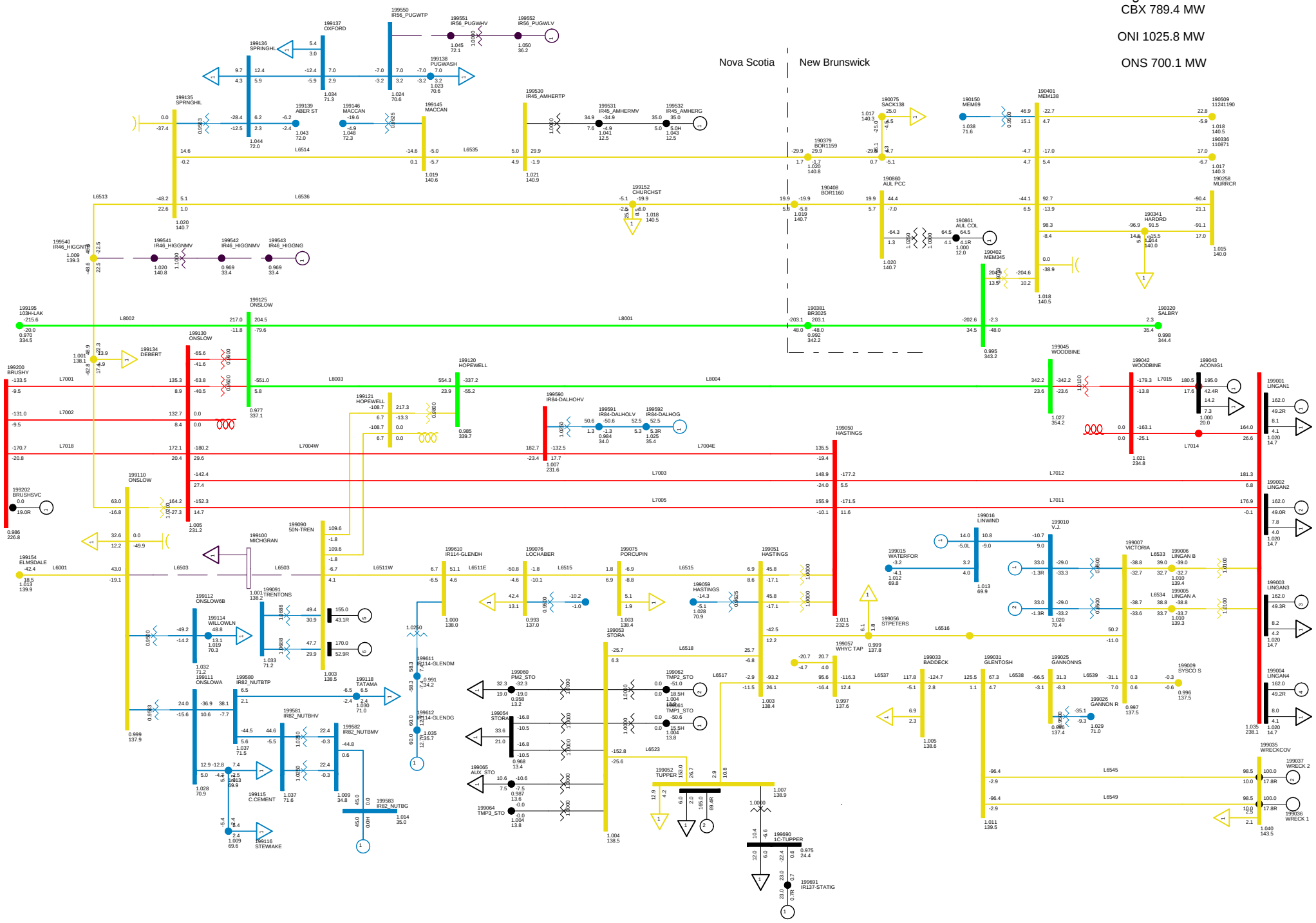

2013 WINTER PEAK NS EXPORT 200
C12 LOSE 6503
NORTHEASTERN NS WED, DEC 10 2008 9:47

Total Wind Gen: 290.1 MW
Gross Tupper 165.0 MW
Gross Wreck Cove 200.0 MW
Net Stora Load 178.4 MW
Gross Lingan 648.0 MW
Gross Trenton 325.0 MW
Gross Gas Turbine 210.0 MW
Total BMPC Load 108.5 MW
Gross Pt Aconi 195.0 MW
Gross Tuft's Cove 455.2 MW
Gross Small Hydro 182.4 MW

Bus - VOLTAGE (KV/PU)
Branch - MW/MVAR
Equipment - MW/MVAR
110.0%RATEB
1.050OV 0.950UV
KV: <=25.000 <=69.000 <=138.000 <=230.000 <=345.000 >345.000

Figure ___

NSX 204.2 MW
CBX 790.3 MW
ONI 1016.0 MW
ONS 700.3 MW

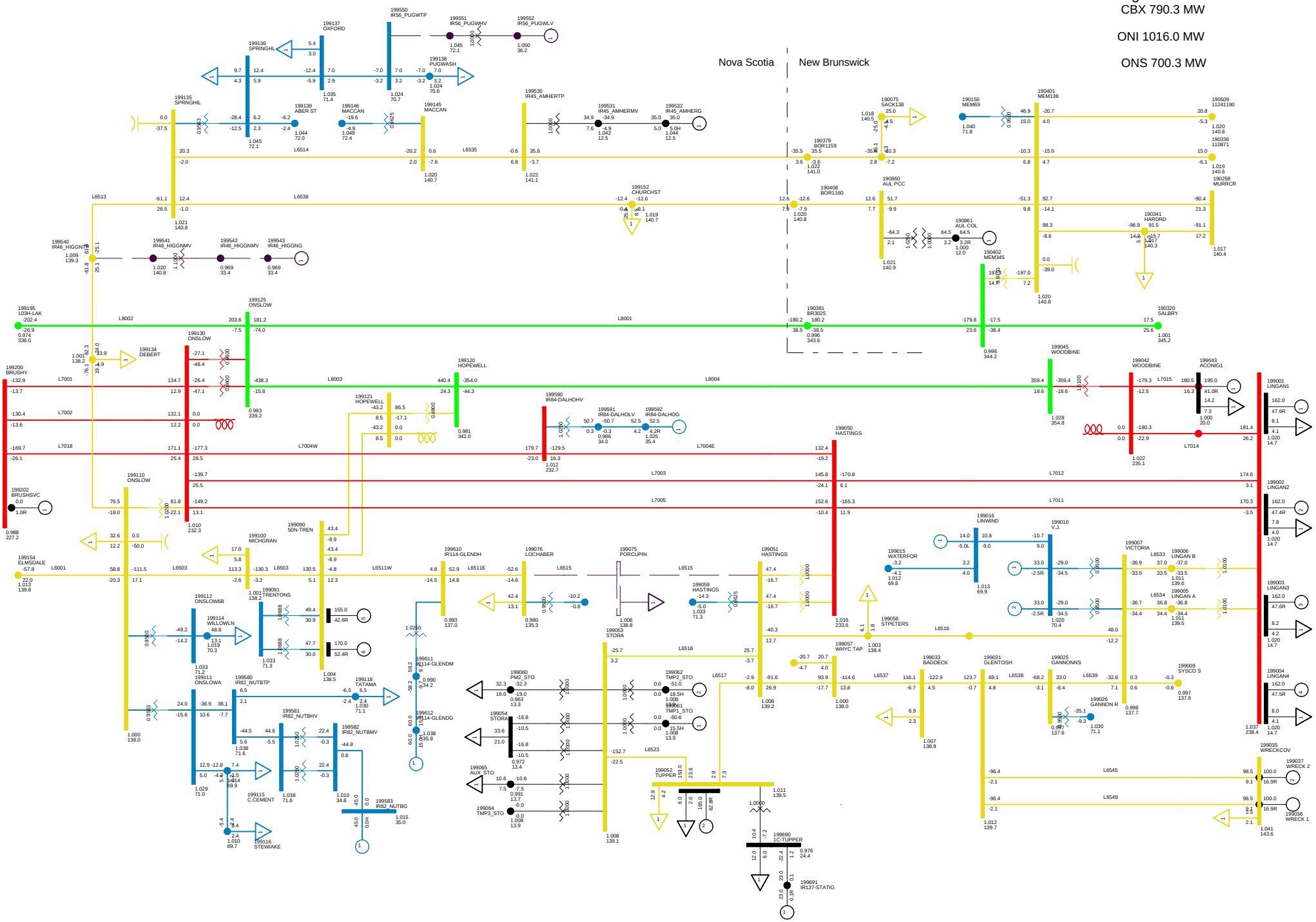

2013 WINTER PEAK NS EXPORT 200
C13 LOSE L6511
NORTHEASTERN NS WED, DEC 10 2008 9:48

Total Wind Gen: 290.1 MW | Gross Tupper 165.0 MW | Gross Wreck Cove 200.0 MW | Net Stora Load 178.4 MW
Gross Lingan 648.0 MW | Gross Trenton 325.0 MW | Gross Gas Turbine 210.0 MW | Total BMPC Load 108.5 MW
Gross Pt Aconi 195.0 MW | Gross Tuft's Cove 455.2 MW | Gross Small Hydro 182.4 MW

Bus - VOLTAGE (KV/PU)
Branch - MW/MVAR
Equipment - MW/MVAR
110.0%RATEB
1.0500V 0.9500V
KV: <=25.000 <=69.000 <=138.000 <=230.000 <=345.000 >345.000

Figure ___

NSX 199.1 MW
CBX 789.4 MW
ONI 1010.9 MW
ONS 700.3 MW

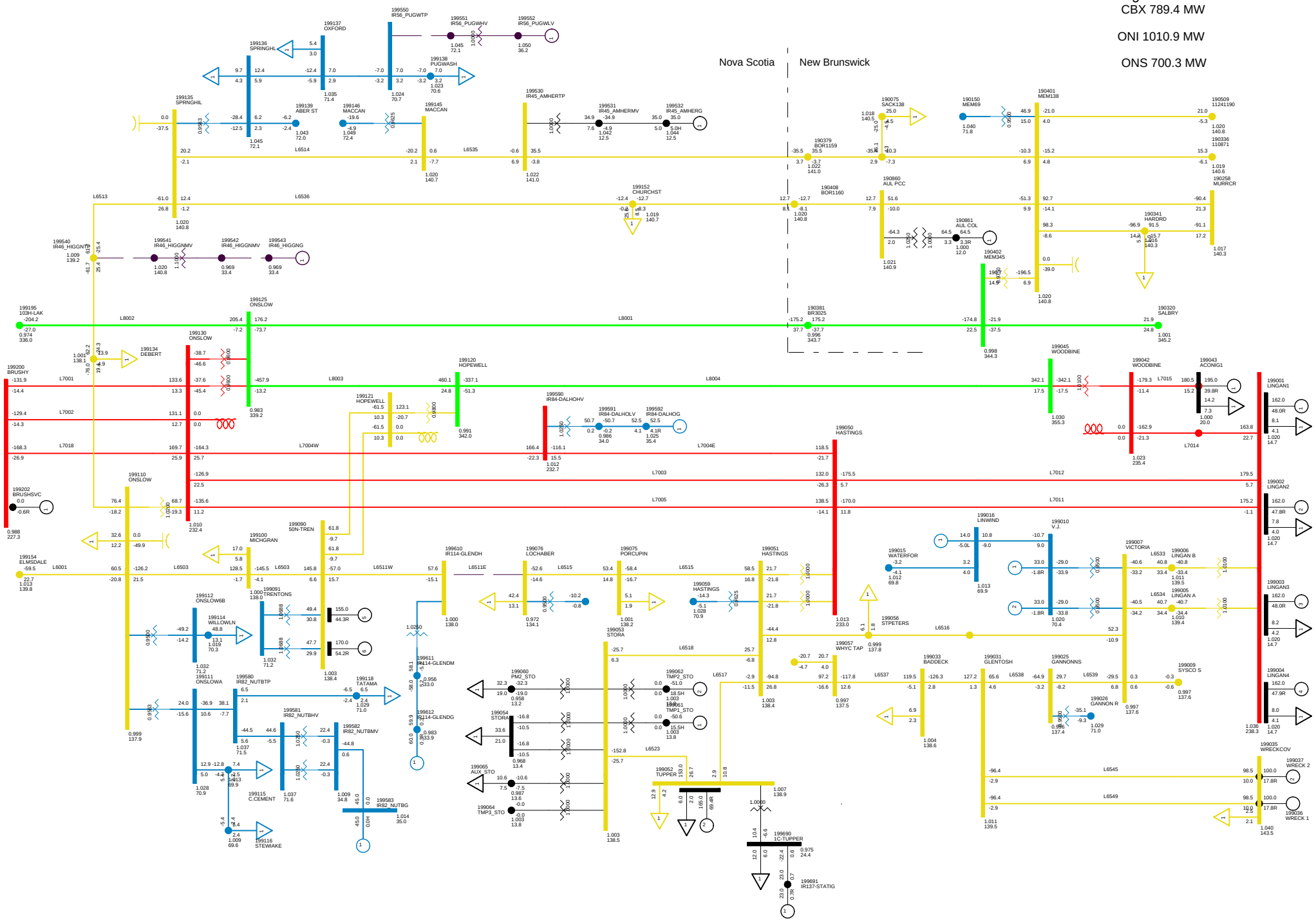

2013 WINTER PEAK NS EXPORT 200
C14 LOSE L6511E
NORTHEASTERN NS WED, DEC 10 2008 9:48

Total Wind Gen: 290.1 MW | Gross Tupper 165.0 MW | Gross Wreck Cove 200.0 MW | Net Stora Load 178.4 MW
Gross Lingan 648.0 MW | Gross Trenton 325.0 MW | Gross Gas Turbine 210.0 MW | Total BMPC Load 108.5 MW
Gross Pt Aconi 195.0 MW | Gross Tuft's Cove 455.2 MW | Gross Small Hydro 182.4 MW

Bus - VOLTAGE (KV/PU)
Branch - MW/MVAR
Equipment - MW/MVAR
110.0%RATEB
1.050OV 0.950UV
KV: <=25.000 <=69.000 <=138.000 <=230.000 <=345.000 >345.000

Figure ___

NSX 199.2 MW
CBX 790.2 MW
ONI 1011.0 MW
ONS 700.3 MW

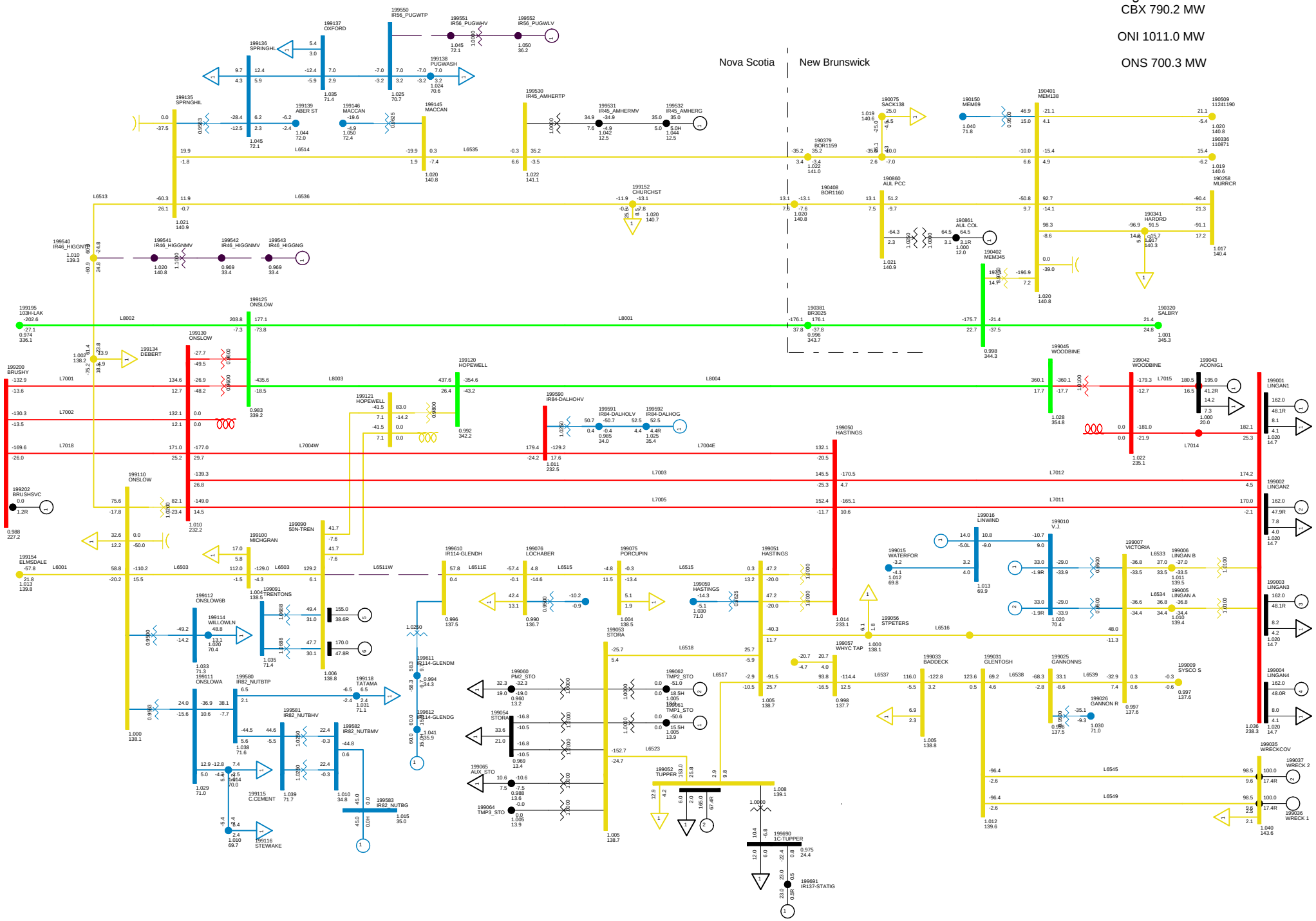

2013 WINTER PEAK NS EXPORT 200
C15 LOSE L6511W
NORTHEASTERN NS WED, DEC 10 2008 9:48

Total Wind Gen: 290.1 MW
Gross Tupper 165.0 MW
Gross Wreck Cove 200.0 MW
Net Stora Load 178.4 MW
Gross Lingan 648.0 MW
Gross Trenton 325.0 MW
Gross Gas Turbine 210.0 MW
Total BMPC Load 108.5 MW
Gross Pt Aconi 195.0 MW
Gross Tuft's Cove 455.2 MW
Gross Small Hydro 182.4 MW

Bus - VOLTAGE (KV/PU)
Branch - MW/MVAR
Equipment - MW/MVAR
110.0%RATEB
1.0500V 0.9500V
KV: <=25.000 <=69.000 <=138.000 <=230.000 <=345.000 >345.000

Figure ___

NSX 215.0 MW
CBX 789.9 MW
ONI 1012.0 MW
ONS 700.7 MW

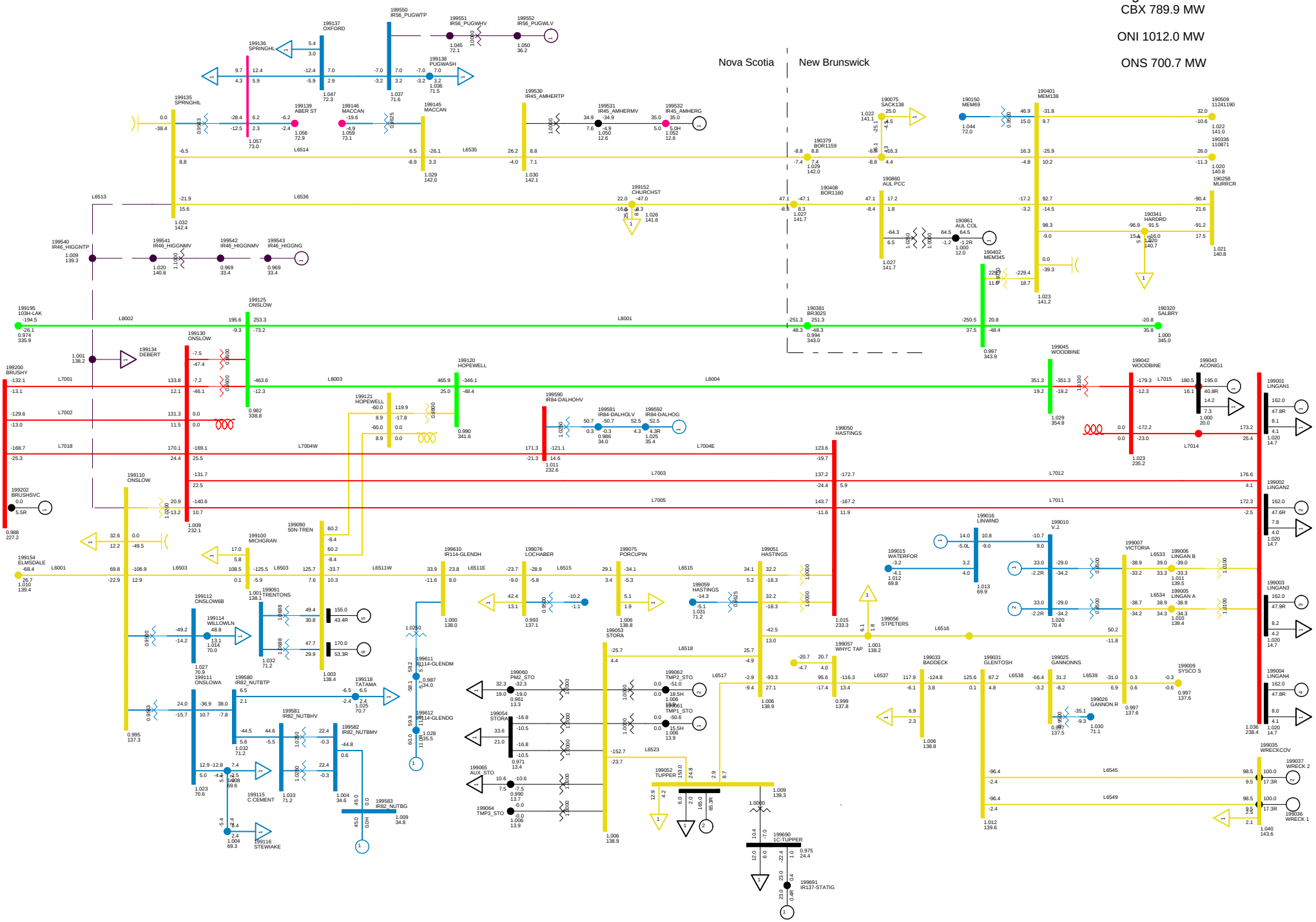

2013 WINTER PEAK NS EXPORT 200
C16 LOSE L6513
NORTHEASTERN NS WED, DEC 10 2008 9:48

Total Wind Gen: 290.1 MW | Gross Tupper 165.0 MW | Gross Wreck Cove 200.0 MW | Net Stora Load 178.4 MW
Gross Lingan 648.0 MW | Gross Trenton 325.0 MW | Gross Gas Turbine 210.0 MW | Total BMPC Load 108.5 MW
Gross Pt Aconi 195.0 MW | Gross Tuft's Cove 455.2 MW | Gross Small Hydro 182.4 MW

Bus - VOLTAGE (KV/PU)
Branch - MW/MVAR
Equipment - MW/MVAR
110.0%RATEB
1.050UV 0.950UV
KV: <=25.000 <=69.000 <=138.000 <=230.000 <=345.000 >345.000

Figure ___

NSX 225.1 MW
CBX 789.9 MW
ONI 1011.8 MW
ONS 700.3 MW

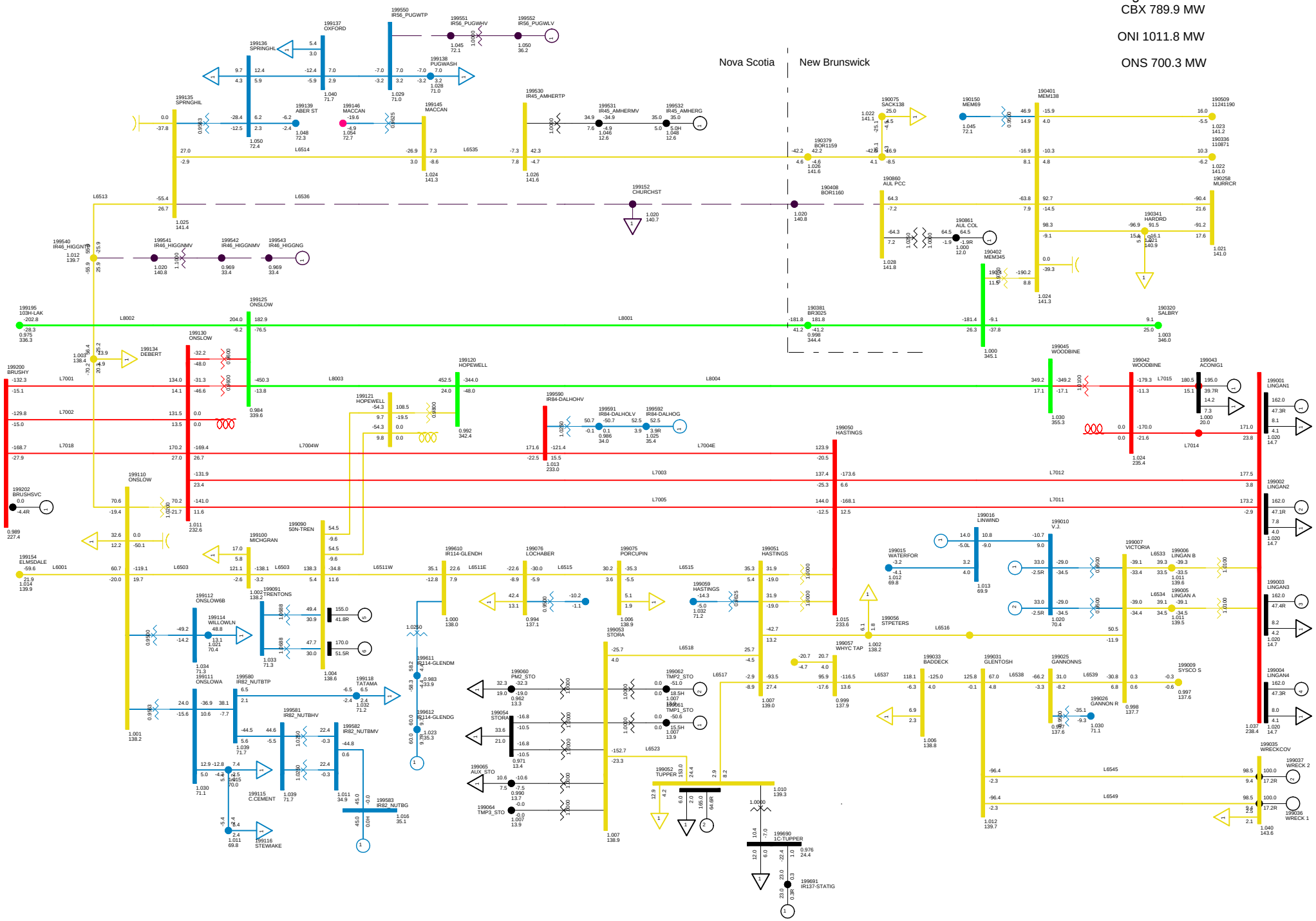

2013 WINTER PEAK NS EXPORT 200
C17 LOSE L6536
NORTHEASTERN NS WED, DEC 10 2008 9:48

Total Wind Gen: 290.1 MW | Gross Tupper 165.0 MW | Gross Wreck Cove 200.0 MW | Net Stora Load 178.4 MW
Gross Lingan 648.0 MW | Gross Trenton 325.0 MW | Gross Gas Turbine 210.0 MW | Total BMPC Load 108.5 MW
Gross Pt Aconi 195.0 MW | Gross Tuft's Cove 455.2 MW | Gross Small Hydro 182.4 MW

Bus - VOLTAGE (KV/PU)
Branch - MW/MVAR
Equipment - MW/MVAR
110.0%RATEB
1.050OV 0.950UV
KV: <=25.000 <=69.000 <=138.000 <=230.000 <=345.000 >345.000

Figure ___

NSX 199.8 MW

CBX 789.8 MW

ONI 1011.7 MW

ONS 700.3 MW

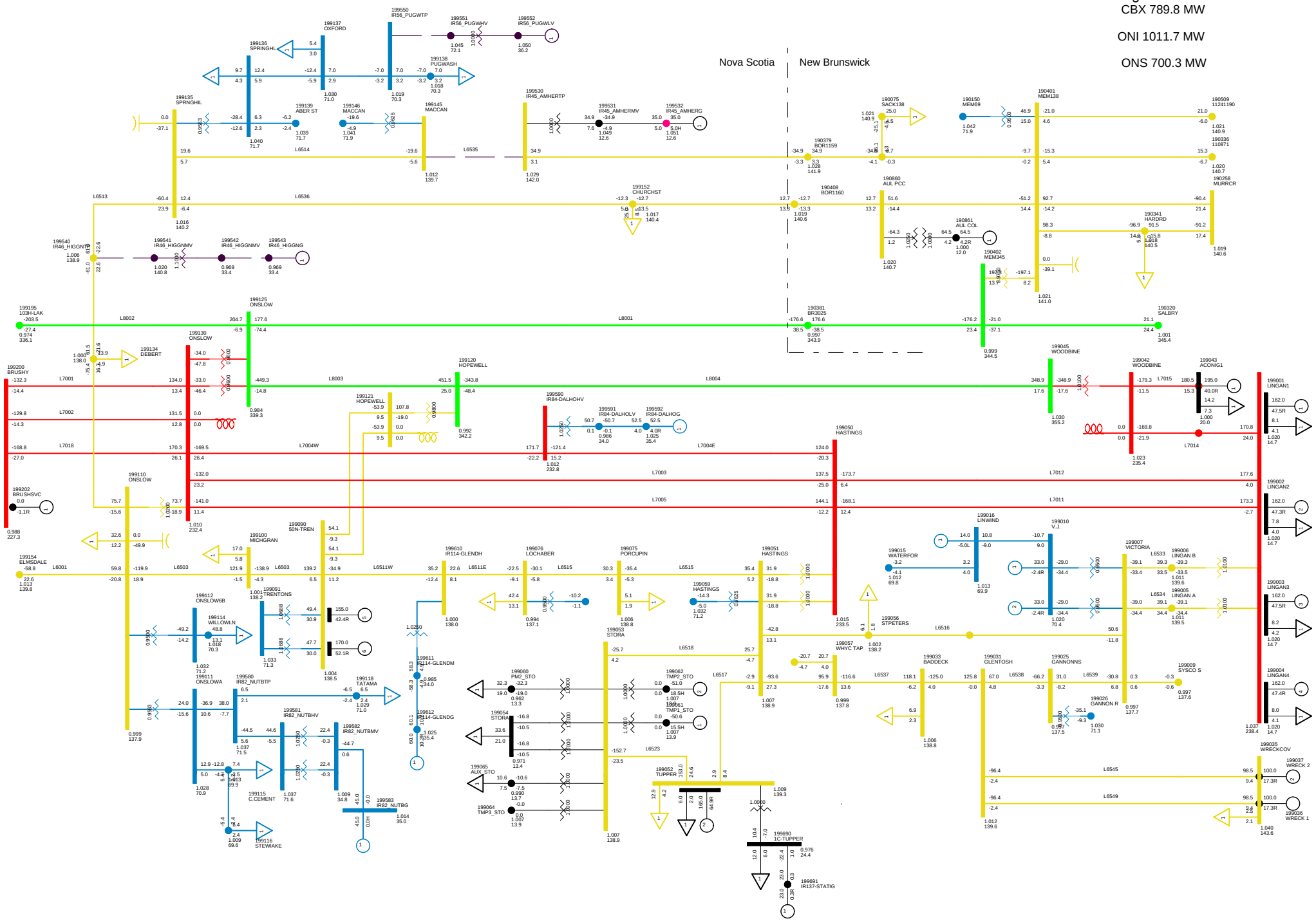

2013 WINTER PEAK NS EXPORT 200
C18 LOSE L6535S
NORTHEASTERN NS WED, DEC 10 2008 9:48

Total Wind Gen: 290.1 MW | Gross Tupper 165.0 MW | Gross Wreck Cove 200.0 MW | Net Stora Load 178.4 MW
Gross Lingan 648.0 MW | Gross Trenton 325.0 MW | Gross Gas Turbine 210.0 MW | Total BMPC Load 108.5 MW
Gross Pt Aconi 195.0 MW | Gross Tuft's Cove 455.2 MW | Gross Small Hydro 182.4 MW

Bus - VOLTAGE (KV/PU)
Branch - MW/MVAR
Equipment - MW/MVAR
110.0%RATEB
1.050OV 0.950UV
KV: <=25.000 <=69.000 <=138.000 <=230.000 <=345.000 >345.000

Figure ___

NSX 200.1 MW
CBX 789.8 MW
ONI 1011.7 MW
ONS 700.3 MW

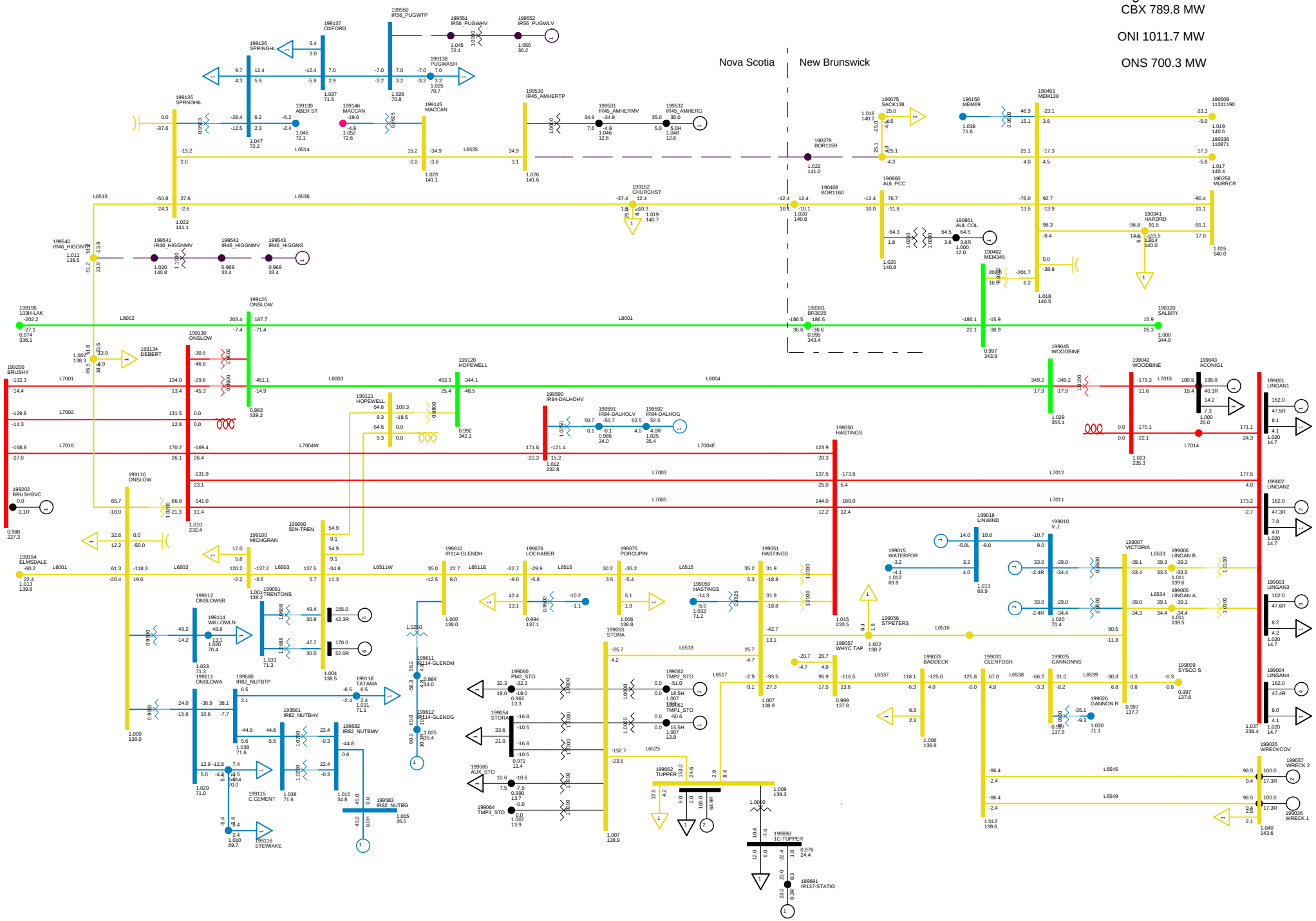

2013 WINTER PEAK NS EXPORT 200
C19 LOSE L6535N
NORTHEASTERN NS WED, DEC 10 2008 9:48

Total Wind Gen: 290.1 MW | Gross Tupper 165.0 MW | Gross Wreck Cove 200.0 MW | Net Stora Load 178.4 MW
Gross Lingan 648.0 MW | Gross Trenton 325.0 MW | Gross Gas Turbine 210.0 MW | Total BMPC Load 108.5 MW
Gross Pt Aconi 195.0 MW | Gross Tuft's Cove 455.2 MW | Gross Small Hydro 182.4 MW

Bus - VOLTAGE (KV/PU)
Branch - MW/MVAR
Equipment - MW/MVAR
110.0%RATEB
1.0500V 0.9500V
KV: <=25.000 <=69.000 <=138.000 <=230.000 <=345.000 >345.000

Figure ___

NSX 136.6 MW
CBX 722.4 MW
ONI 947.9 MW
ONS 700.3 MW

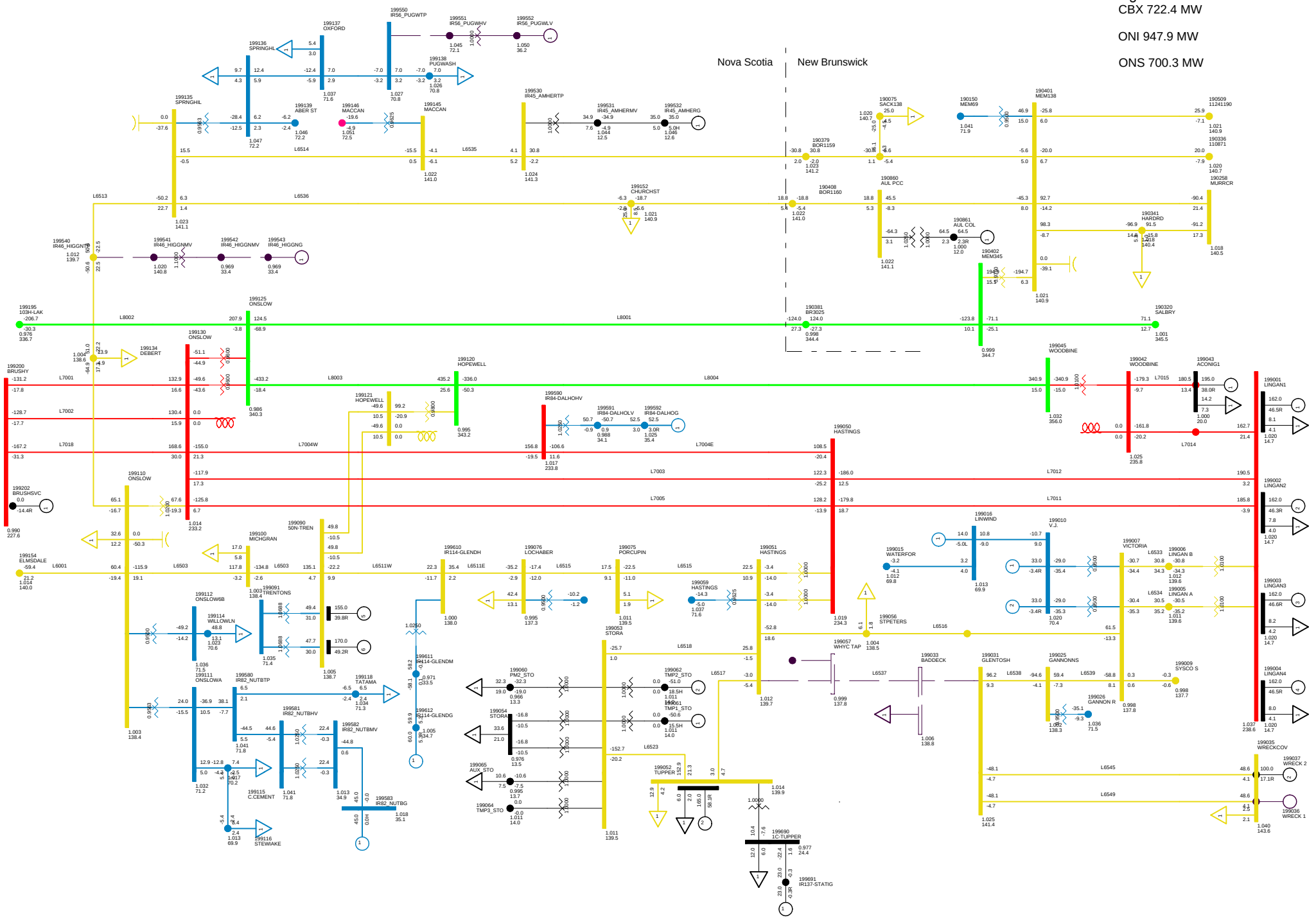

2013 WINTER PEAK NS EXPORT 200
C20 LOSE L6537
NORTHEASTERN NS WED, DEC 10 2008 9:48

Total Wind Gen: 290.1 MW | Gross Tupper 165.0 MW | Gross Wreck Cove 100.0 MW | Net Stora Load 178.4 MW
Gross Lingan 648.0 MW | Gross Trenton 325.0 MW | Gross Gas Turbine 210.0 MW | Total BMPC Load 108.5 MW
Gross Pt Aconi 195.0 MW | Gross Tuft's Cove 455.2 MW | Gross Small Hydro 182.4 MW

Bus - VOLTAGE (KV/PU)
Branch - MW/MVAR
Equipment - MW/MVAR
110.0%RATEB
1.050OV 0.950UV
KV: <=25.000 <=69.000 <=138.000 <=230.000 <=345.000 >345.000

Figure ___

NSX 205.1 MW
CBX 795.3 MW
ONI 1016.9 MW
ONS 700.3 MW

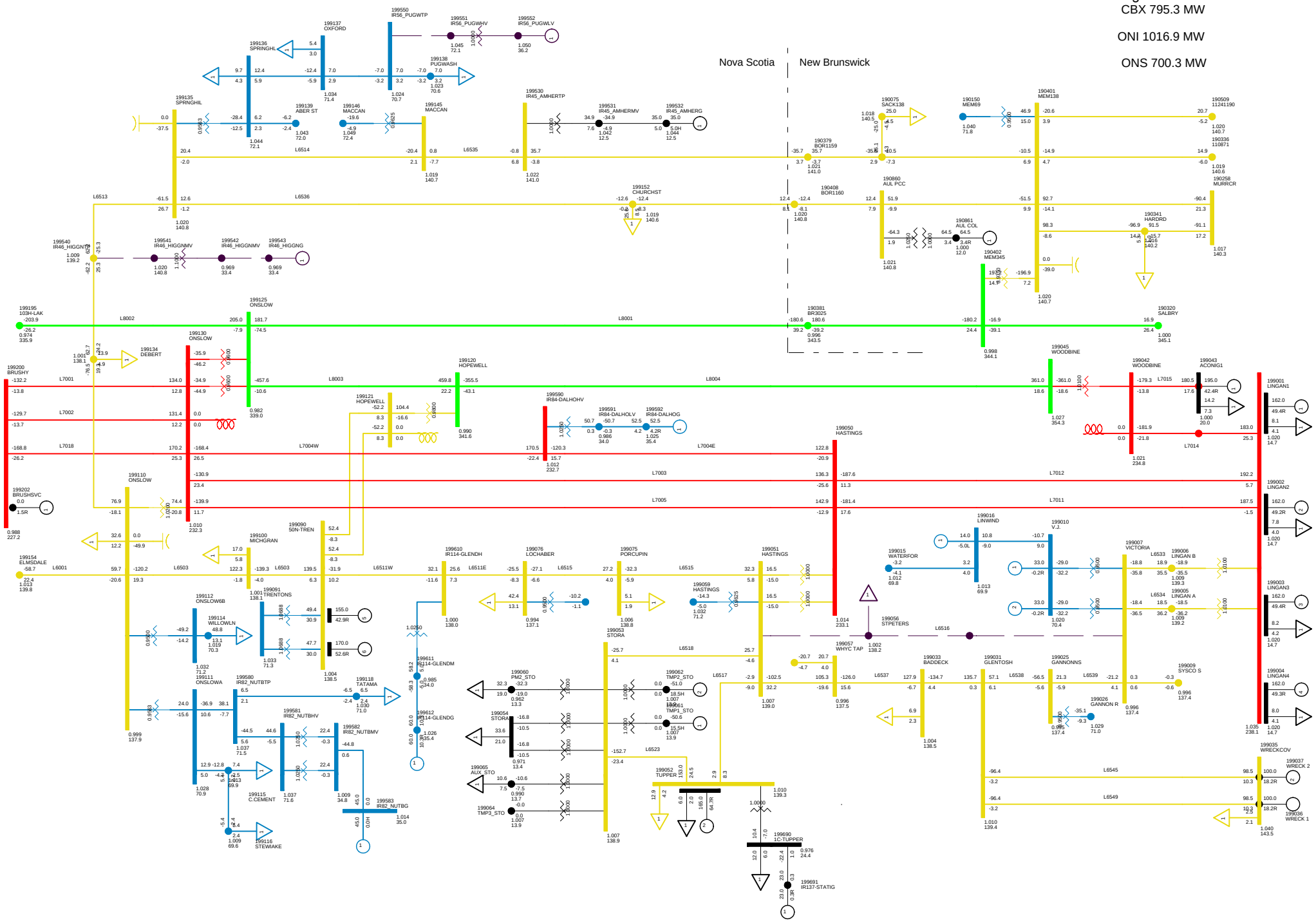

2013 WINTER PEAK NS EXPORT 200
C21 LOSE L6516
NORTHEASTERN NS WED, DEC 10 2008 9:49

Total Wind Gen: 290.1 MW
Gross Lingan 648.0 MW
Gross Pt Aconi 195.0 MW
Gross Tupper 165.0 MW
Gross Trenton 325.0 MW
Gross Tuft's Cove 455.2 MW
Gross Wreck Cove 200.0 MW
Gross Gas Turbine 210.0 MW
Gross Small Hydro 182.4 MW
Net Stora Load 178.4 MW
Total BMPC Load 108.5 MW

Bus - VOLTAGE (KV/PU)
Branch - MW/MVAR
Equipment - MW/MVAR
110.0%RATEB
1.050OV 0.950UV
KV: <=25.000 <=69.000 <=138.000 <=230.000 <=345.000 >345.000

Figure ___

NSX 195.1 MW
CBX 785.1 MW
ONI 1006.9 MW
ONS 700.3 MW

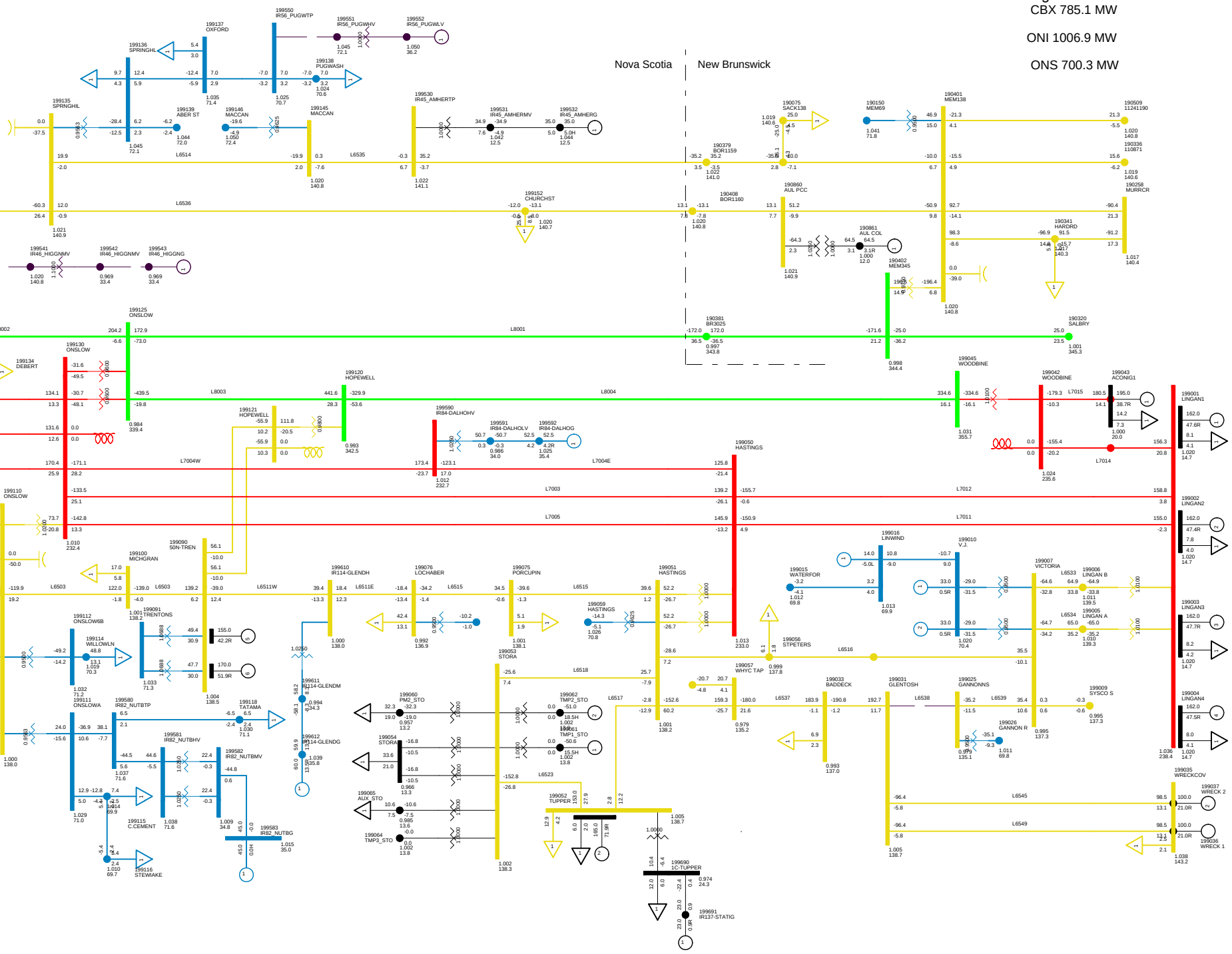

2013 WINTER PEAK NS EXPORT 200
C22 LOSE L6538
NORTHEASTERN NS WED, DEC 10 2008 9:49

Total Wind Gen: 290.1 MW | Gross Tupper 165.0 MW | Gross Wreck Cove 200.0 MW | Total Stora Load 178.4 MW
Gross Lingan 648.0 MW | Gross Trenton 325.0 MW | Gross Gas Turbine 210.0 MW | Total BMPC Load 108.5 MW
Gross Pt Aconi 195.0 MW | Gross Tuft's Cove 455.2 MW | Gross Small Hydro 182.4 MW

Bus - VOLTAGE (KV/PU)
Branch - MW/MVAR
Equipment - MW/MVAR
110.0%RATEB
1.0500V 0.9500V
KV: <=25.000 <=69.000 <=138.000 <=230.000 <=345.000 >345.000

Figure ___

Total Wind Gen: 290.1 MW | Gross Tupper 165.0 MW | Gross Wreck Cove 200.0 MW

Gross Lingan 648.0 MW | Gross Trenton 325.0 MW | Gross Gas Turbine 210.0 MW

Gross Pt Aconi 195.0 MW | Gross Tuft's Cove 455.2 MW | Gross Small Hydro 182.4 MW

Net Stora Load 178.4 MW | Total BMPC Load 108.5 MW

NSX 199.8 MW

CBX 789.8 MW

ONI 1011.7 MW

ONS 700.3 MW

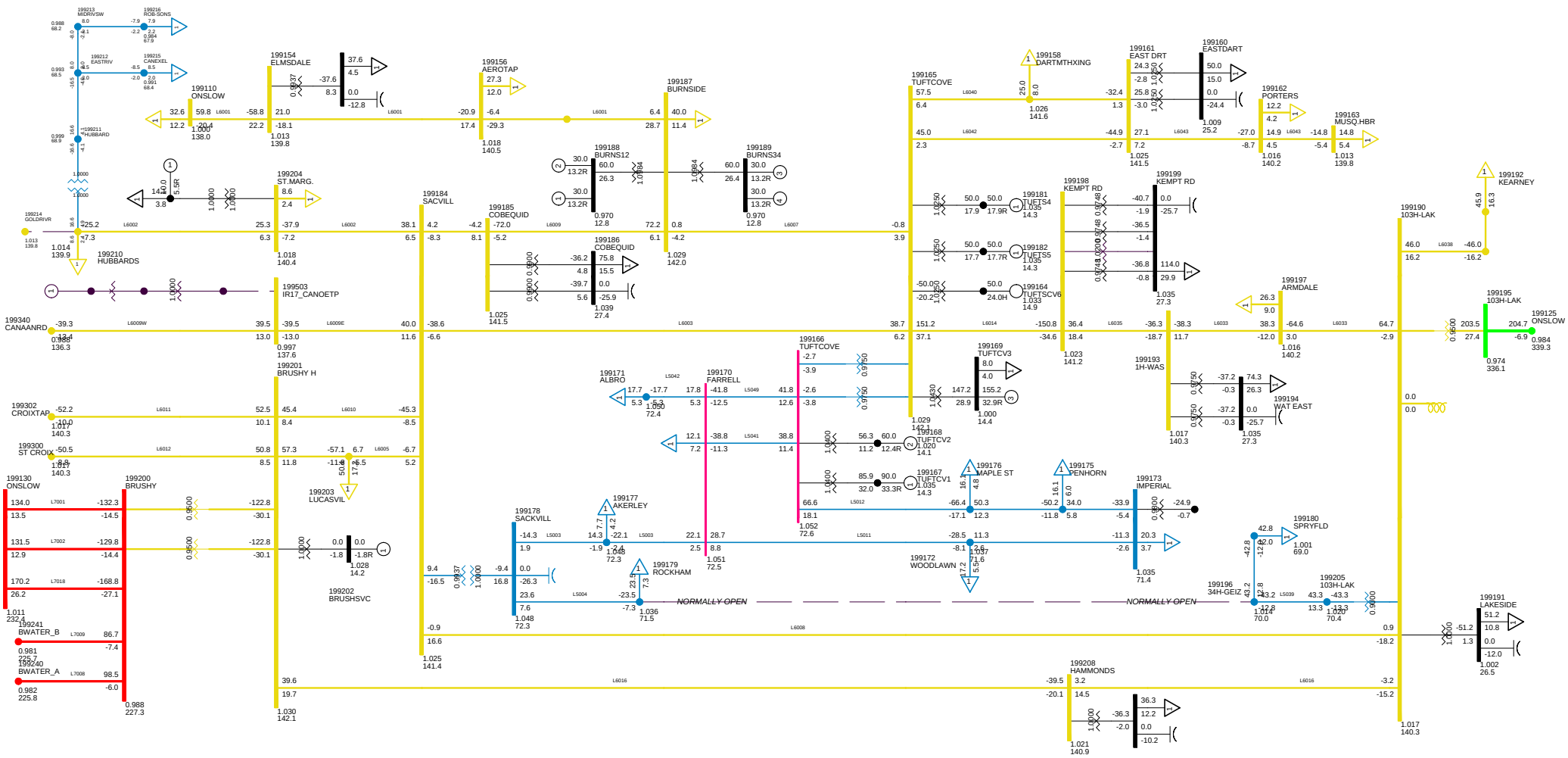

2013 WINTER PEAK WITH DSM - DELIVER RESERVE
NS-NB=200; NB-NE=500; CBX=790; ONI=1015 ONS=704
METRO ZONE WED, DEC 10 2008 9:49

Bus - VOLTAGE (KV/PU)
Branch - MW/MVAR
Equipment - MW/MVAR
100.0%RATE8
1.050OV 0.950UV
KV: <=30.000 <=69.000 <=138.000 <=230.000 <=345.000 >345.000

Figure __

Total Wind Gen: 290.1 MW | Gross Tupper 165.0 MW | Gross Wreck Cove 200.0 MW

Gross Lingan 648.0 MW | Gross Trenton 325.0 MW | Gross Gas Turbine 210.0 MW

Gross Pt Aconi 195.0 MW | Gross Tuft's Cove 455.2 MW | Gross Small Hydro 182.4 MW

Net Stora Load 178.4 MW | Total BMPC Load 108.5 MW

NSX 199.7 MW

CBX 789.8 MW

ONI 1011.7 MW

ONS 700.4 MW

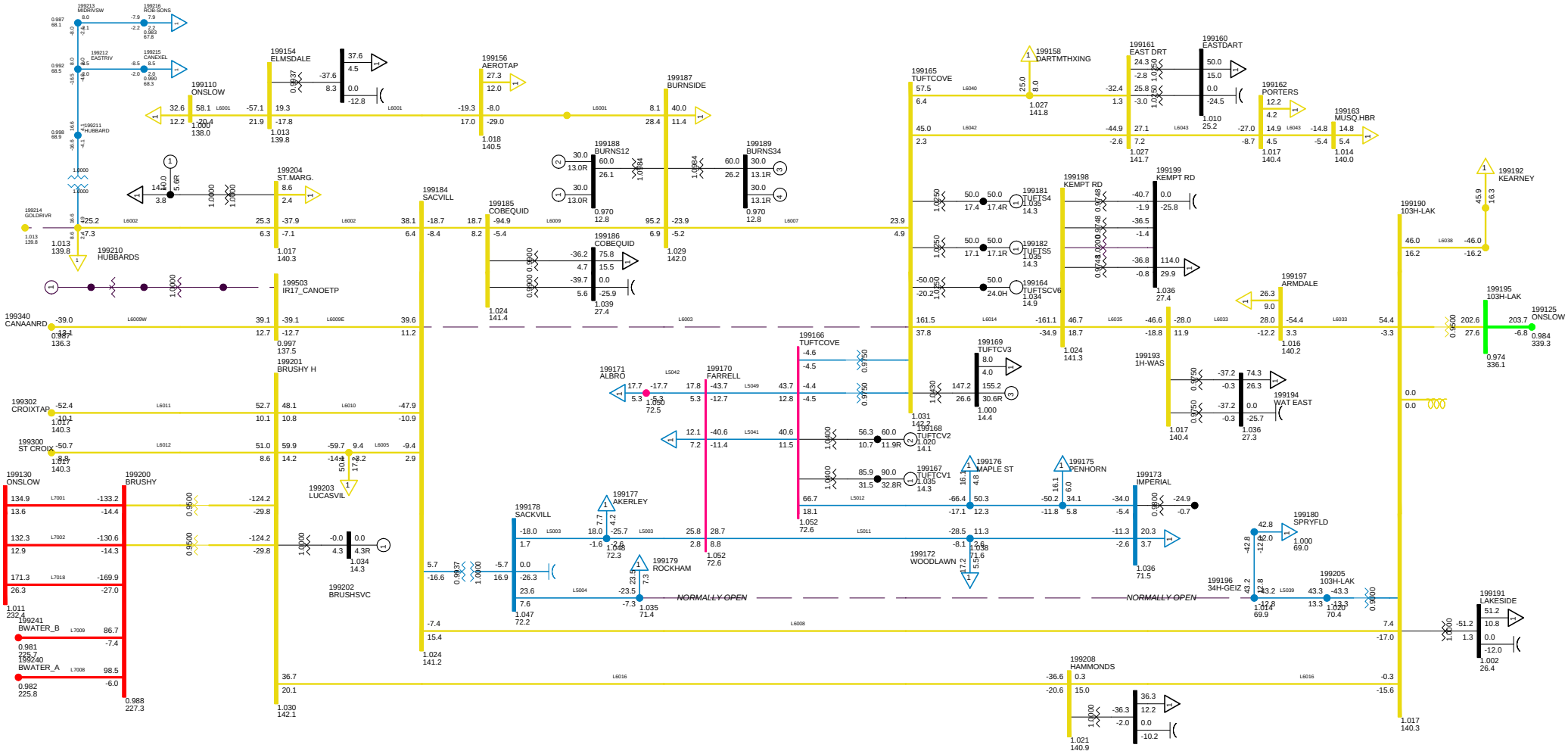

2013 WINTER PEAK NS EXPORT 200
C23 LOSE L6003
METRO ZONE WED, DEC 10 2008 9:49

Bus - VOLTAGE (KV/PU)
Branch - MW/MVAR
Equipment - MW/MVAR
100.0%RATE8
1.050OV 0.950UV
KV: <=30.000 <=69.000 <=138.000 <=230.000 <=345.000 >345.000

Figure __

Total Wind Gen: 290.1 MW	Gross Tupper 165.0 MW	Gross Wreck Cove 200.0 MW
Gross Lingan 648.0 MW	Gross Trenton 325.0 MW	Gross Gas Turbine 210.0 MW
Gross Pt Aconi 195.0 MW	Gross Tuft's Cove 455.2 MW	Gross Small Hydro 182.4 MW
Net Stora Load 178.4 MW	Total BMPC Load 108.5 MW	

NSX 251.0 MW

CBX 789.9 MW

ONI 1011.8 MW

ONS 648.8 MW

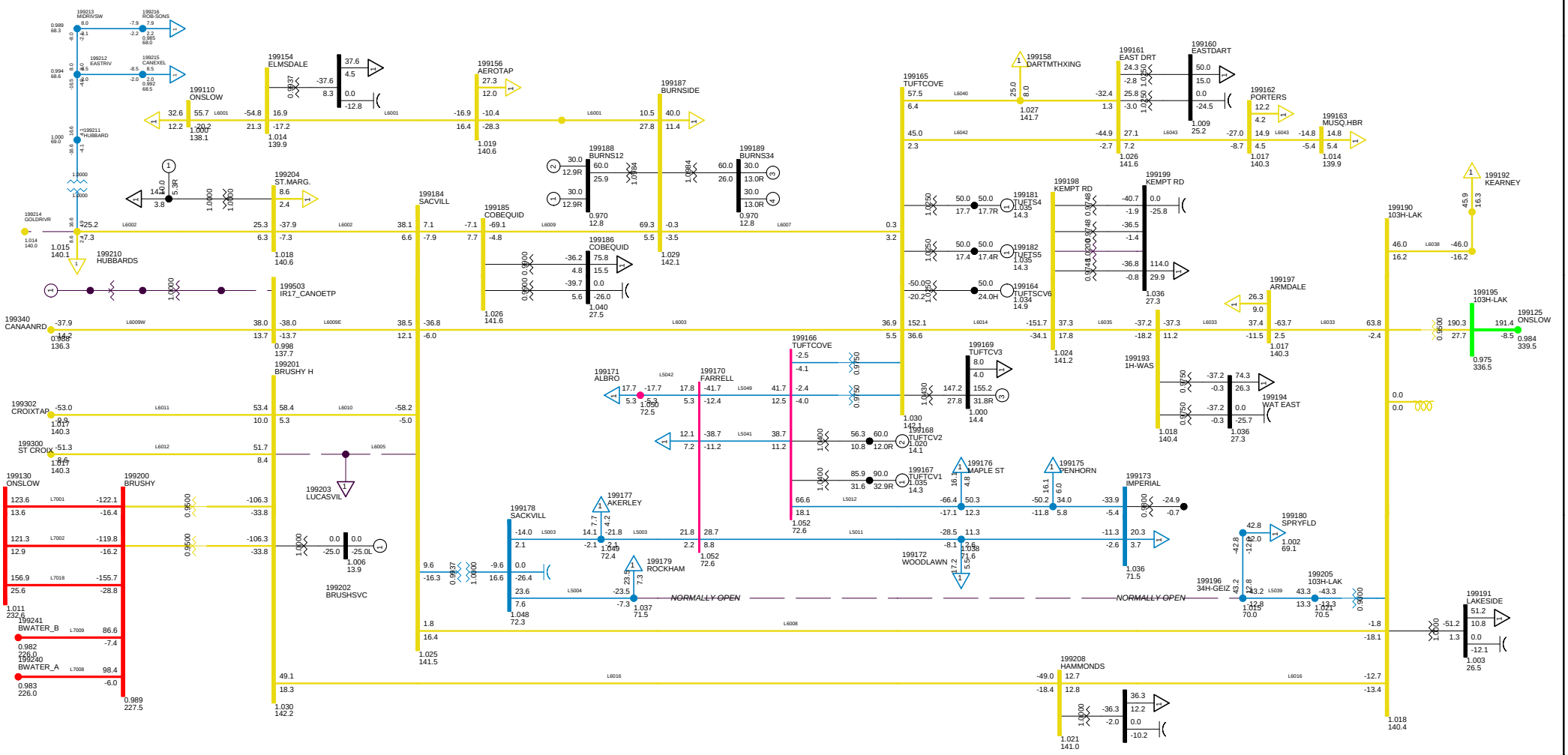

2013 WINTER PEAK NS EXPORT 200
C24 LOSE L6005
METRO ZONE WED, DEC 10 2008 9:49

Bus - VOLTAGE (KV/PU)
Branch - MW/MVAR
Equipment - MW/MVAR
100.0%RATE8
1.050OV 0.950UV
KV: <=30.000 <=69.000 <=138.000 <=230.000 <=345.000 >345.000

Figure __

Total Wind Gen: 290.1 MW | Gross Tupper 165.0 MW | Gross Wreck Cove 200.0 MW

Gross Lingan 648.0 MW | Gross Trenton 325.0 MW | Gross Gas Turbine 210.0 MW

Gross Pt Aconi 195.0 MW | Gross Tuft's Cove 455.2 MW | Gross Small Hydro 182.4 MW

Net Stora Load 178.4 MW | Total BMPC Load 108.5 MW

NSX 199.8 MW

CBX 789.8 MW

ONI 1011.7 MW

ONS 700.3 MW

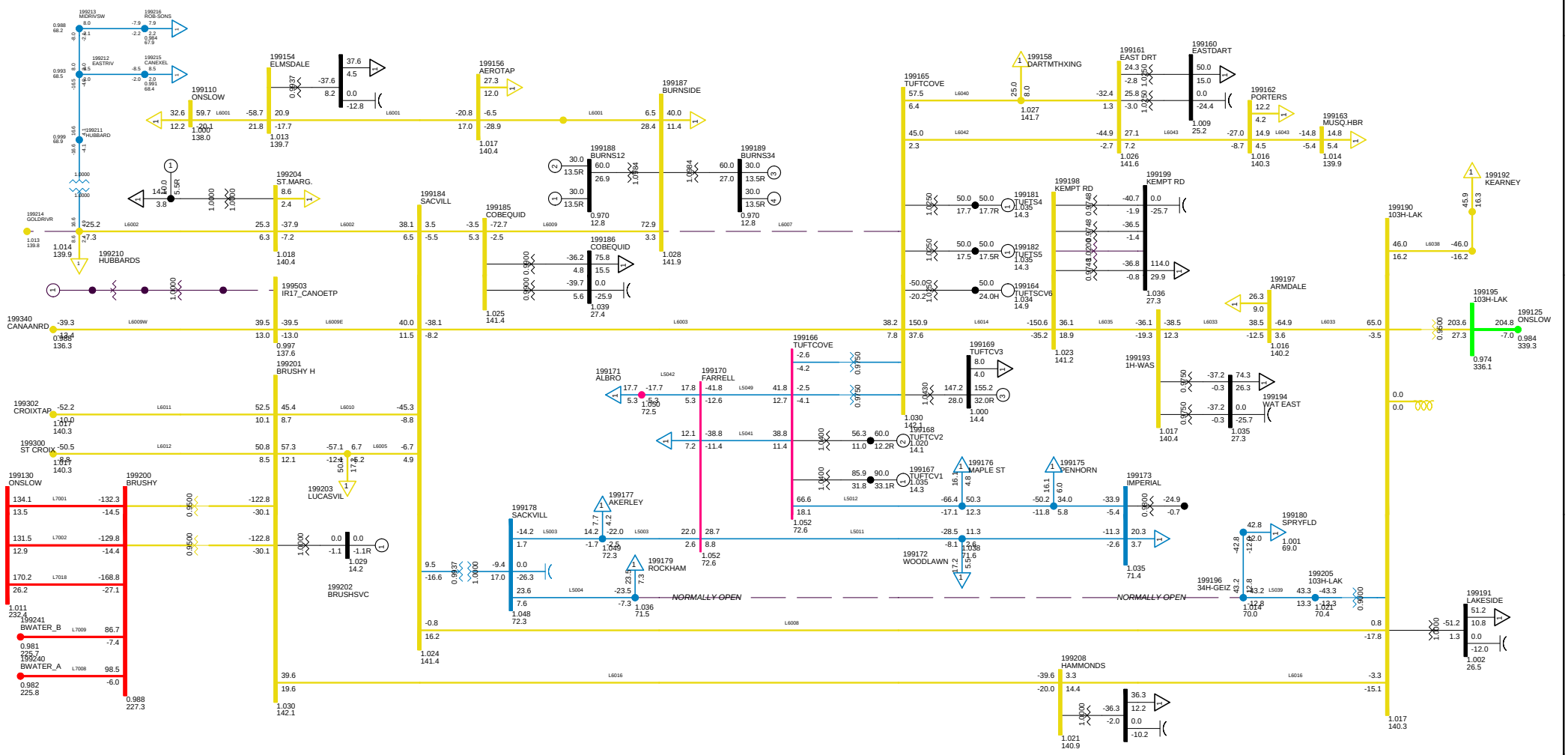

2013 WINTER PEAK NS EXPORT 200
C25 LOSE L6007
METRO ZONE WED, DEC 10 2008 9:49

Bus - VOLTAGE (KV/PU)
Branch - MW/MVAR
Equipment - MW/MVAR
100.0%RATE8
1.050OV 0.950UV
KV: <=30.000 <=69.000 <=138.000 <=230.000 <=345.000 >345.000

Figure __

Total Wind Gen: 290.1 MW
Gross Tupper 165.0 MW
Gross Wreck Cove 200.0 MW
Gross Lingan 648.0 MW
Gross Trenton 325.0 MW
Gross Gas Turbine 210.0 MW
Gross Pt Aconi 195.0 MW
Gross Tuft's Cove 455.2 MW
Gross Small Hydro 182.4 MW
Net Stora Load 178.4 MW
Total BMPC Load 108.5 MW

NSX 199.7 MW
CBX 789.8 MW
ONI 1011.6 MW
ONS 700.3 MW

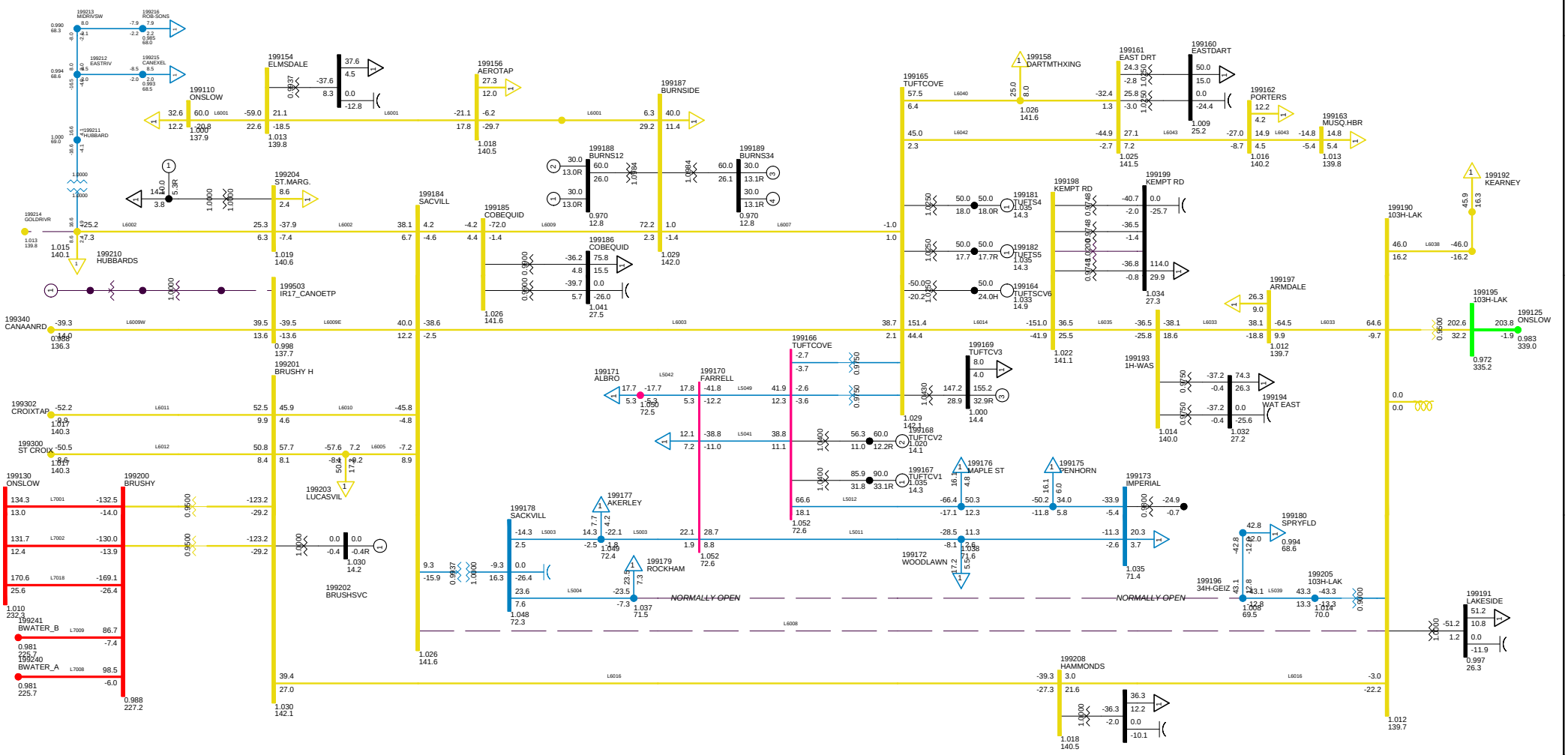

2013 WINTER PEAK NS EXPORT 200
C26 LOSE L6008
METRO ZONE WED, DEC 10 2008 9:49

Bus - VOLTAGE (KV/PU)
Branch - MW/MVAR
Equipment - MW/MVAR
100.0%RATE8
1.050OV 0.950UV
KV: <=30.000 <=69.000 <=138.000 <=230.000 <=345.000 >345.000

Figure __

Total Wind Gen: 290.1 MW | Gross Tupper 165.0 MW | Gross Wreck Cove 200.0 MW

Gross Lingan 648.0 MW | Gross Trenton 325.0 MW | Gross Gas Turbine 210.0 MW

Gross Pt Aconi 195.0 MW | Gross Tuft's Cove 455.2 MW | Gross Small Hydro 182.4 MW

Net Stora Load 178.4 MW | Total BMPC Load 108.5 MW

NSX 236.6 MW

CBX 789.9 MW

ONI 1011.8 MW

ONS 663.3 MW

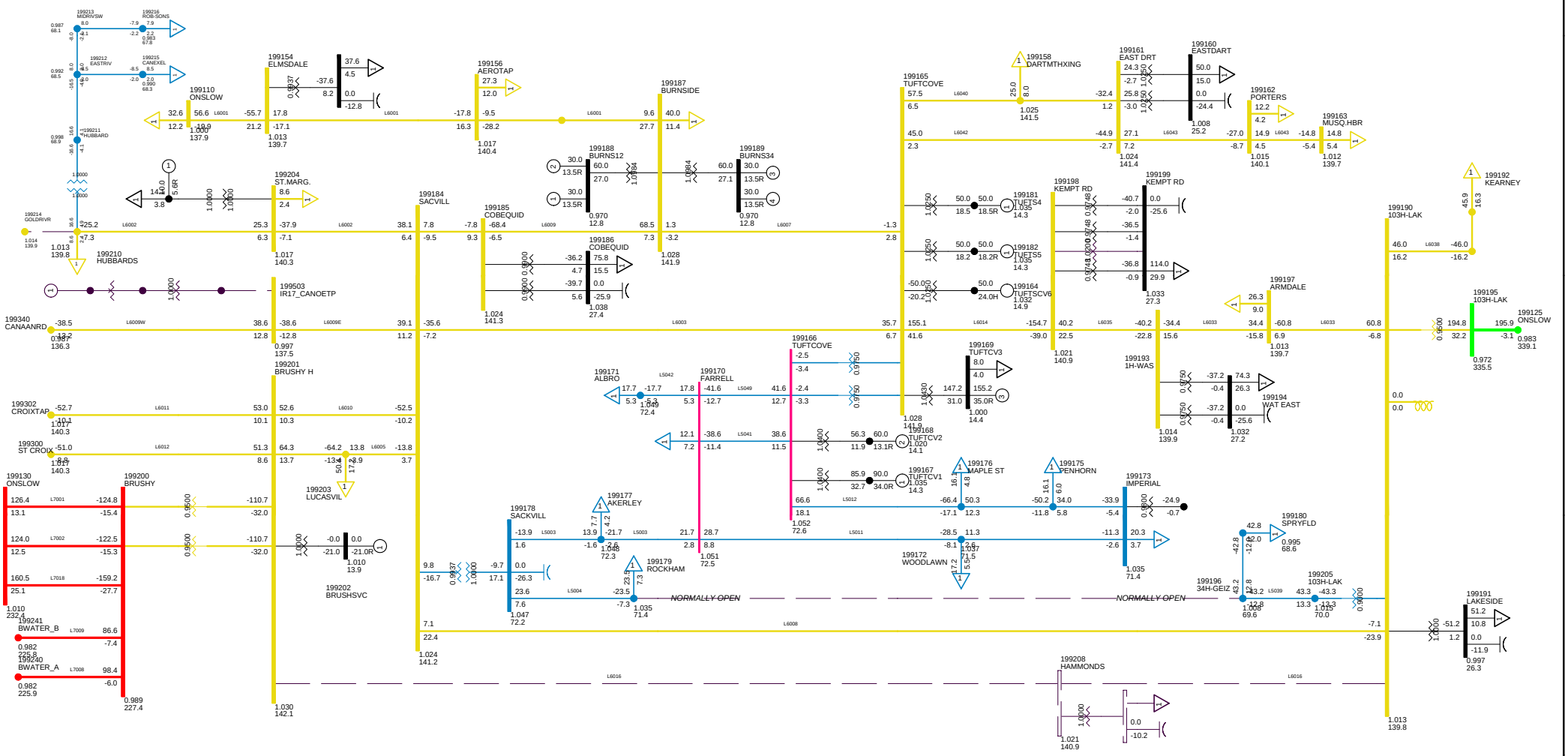

2013 WINTER PEAK NS EXPORT 200
C27 LOSE L6009
METRO ZONE WED, DEC 10 2008 9:49

Bus - VOLTAGE (KV/PU)
Branch - MW/MVAR
Equipment - MW/MVAR
100.0%RATE8
1.050OV 0.950UV
KV: <=30.000 <=69.000 <=138.000 <=230.000 <=345.000 >345.000

Figure __

Total Wind Gen: 290.1 MW | Gross Tupper 165.0 MW | Gross Wreck Cove 200.0 MW

Gross Lingan 648.0 MW | Gross Trenton 325.0 MW | Gross Gas Turbine 210.0 MW

Gross Pt Aconi 195.0 MW | Gross Tuft's Cove 455.2 MW | Gross Small Hydro 182.4 MW

Net Stora Load 178.4 MW | Total BMPC Load 108.5 MW

NSX 199.7 MW

CBX 789.8 MW

ONI 1011.7 MW

ONS 700.4 MW

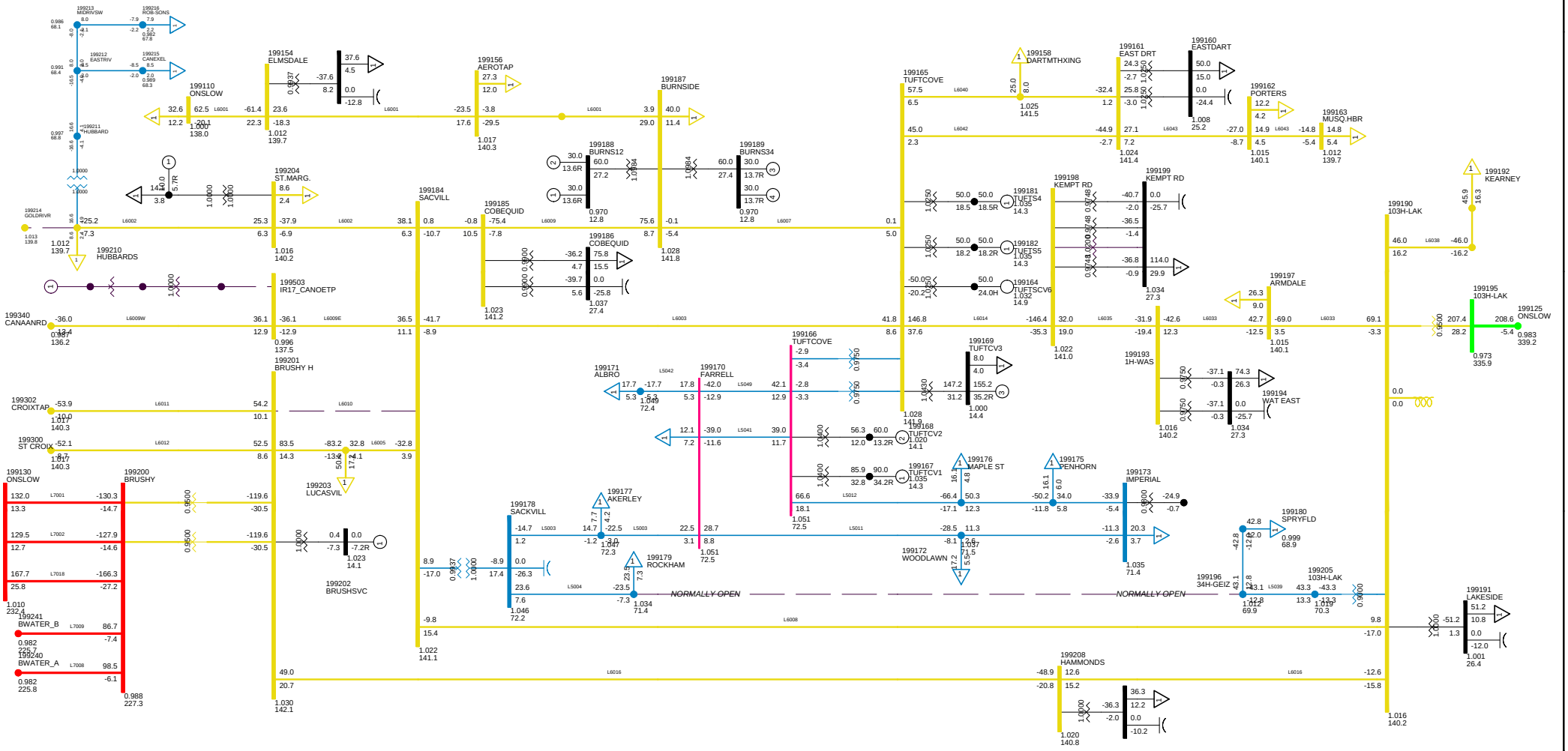

2013 WINTER PEAK NS EXPORT 200
C28 LOSE L6010
METRO ZONE WED, DEC 10 2008 9:50

Bus - VOLTAGE (KV/PU)
Branch - MW/MVAR
Equipment - MW/MVAR
100.0%RATE8
1.050OV 0.950UV
KV: <=30.000 <=69.000 <=138.000 <=230.000 <=345.000 >345.000

Figure __

Total Wind Gen: 290.1 MW
Gross Tupper 165.0 MW
Gross Wreck Cove 200.0 MW
Gross Lingan 648.0 MW
Gross Trenton 325.0 MW
Gross Gas Turbine 210.0 MW
Gross Pt Aconi 195.0 MW
Gross Tuft's Cove 455.2 MW
Gross Small Hydro 182.4 MW
Net Stora Load 178.4 MW
Total BMPC Load 108.5 MW

NSX 195.4 MW
CBX 789.8 MW
ONI 1011.6 MW
ONS 704.6 MW

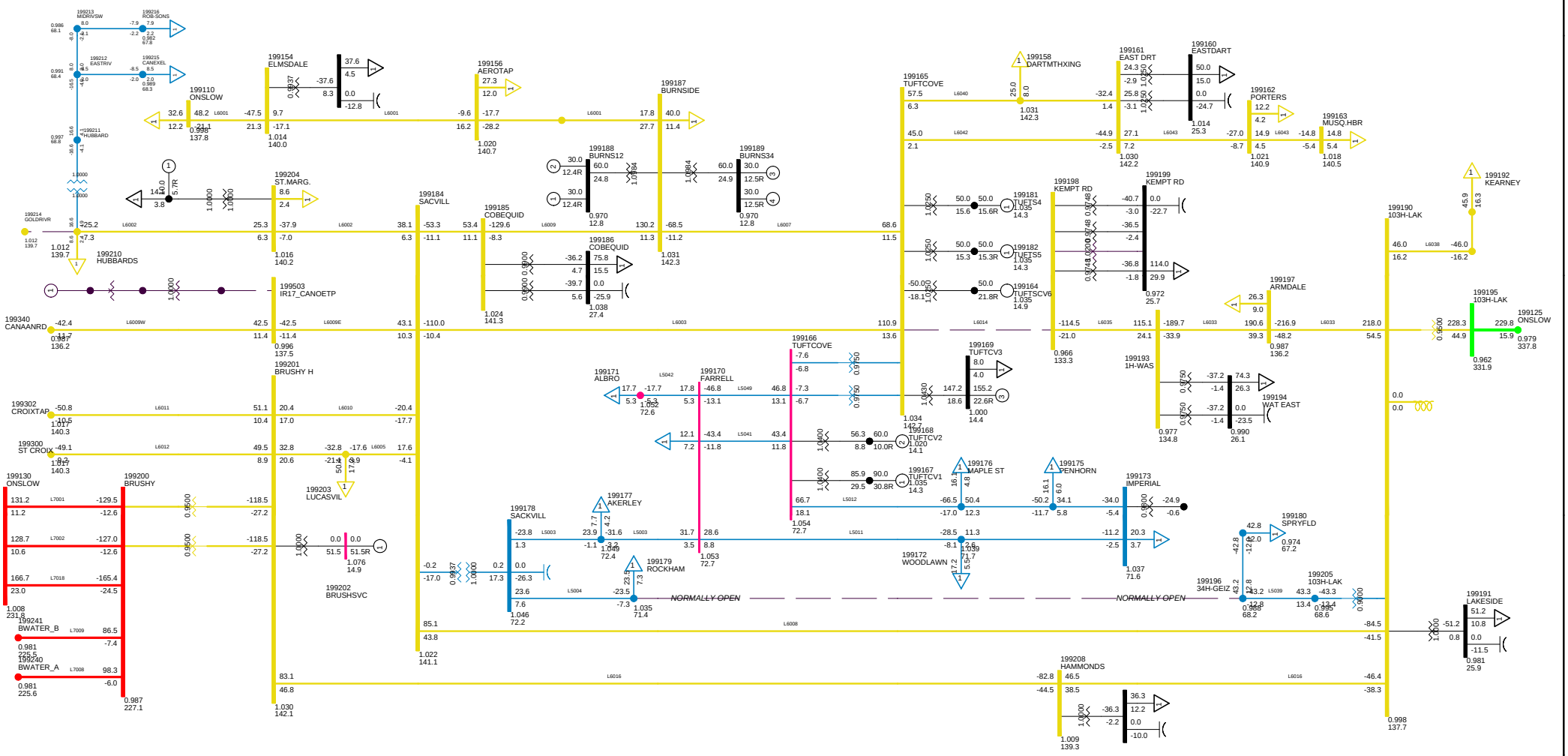

2013 WINTER PEAK NS EXPORT 200
C29 LOSE L6014
METRO ZONE WED, DEC 10 2008 9:50

Bus - VOLTAGE (KV/PU)
Branch - MW/MVAR
Equipment - MW/MVAR
100.0%RATE8
1.050OV 0.950UV
KV: <=30.000 <=69.000 <=138.000 <=230.000 <=345.000

Figure __

Total Wind Gen: 290.1 MW
Gross Tupper 165.0 MW
Gross Wreck Cove 200.0 MW
Gross Lingan 648.0 MW
Gross Trenton 325.0 MW
Gross Gas Turbine 210.0 MW
Gross Pt Aconi 195.0 MW
Gross Tuft's Cove 455.2 MW
Gross Small Hydro 182.4 MW
Net Stora Load 178.4 MW
Total BMPC Load 108.5 MW

NSX 236.6 MW
CBX 789.9 MW
ONI 1011.8 MW
ONS 663.3 MW

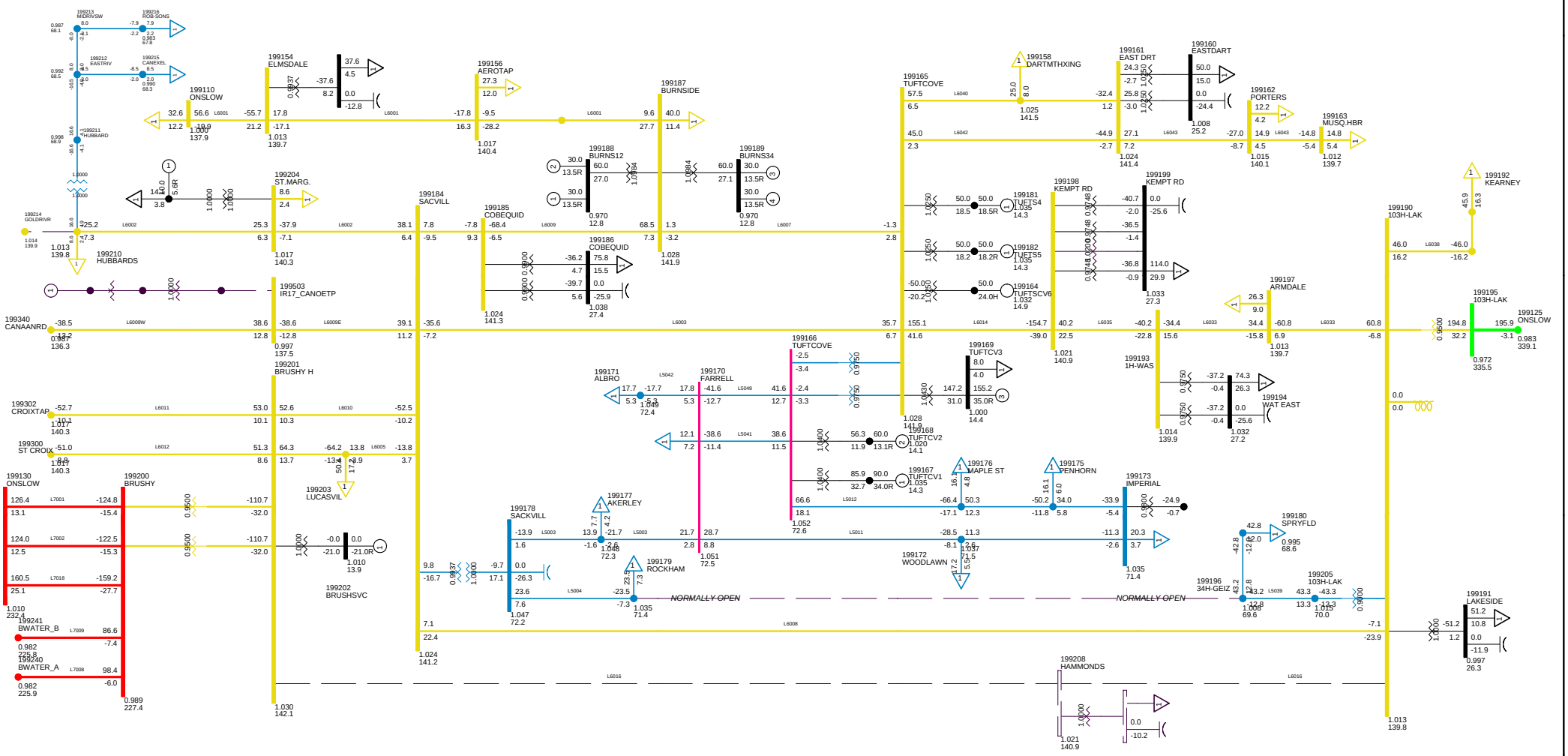

2013 WINTER PEAK NS EXPORT 200
C30 LOSE L6016
METRO ZONE WED, DEC 10 2008 9:50

Bus - VOLTAGE (KV/PU)
Branch - MW/MVAR
Equipment - MW/MVAR
100.0%RATE8
1.050OV 0.950UV
KV: <=30.000 <=69.000 <=138.000 <=230.000 <=345.000 >345.000

Figure __

Total Wind Gen: 290.1 MW
Gross Tupper 165.0 MW
Gross Wreck Cove 200.0 MW
Gross Lingan 648.0 MW
Gross Trenton 325.0 MW
Gross Gas Turbine 210.0 MW
Gross Pt Aconi 195.0 MW
Gross Tuft's Cove 455.2 MW
Gross Small Hydro 182.4 MW
Net Stora Load 178.4 MW
Total BMPC Load 108.5 MW

NSX 263.0 MW
CBX 789.9 MW
ONI 1011.8 MW
ONS 636.7 MW

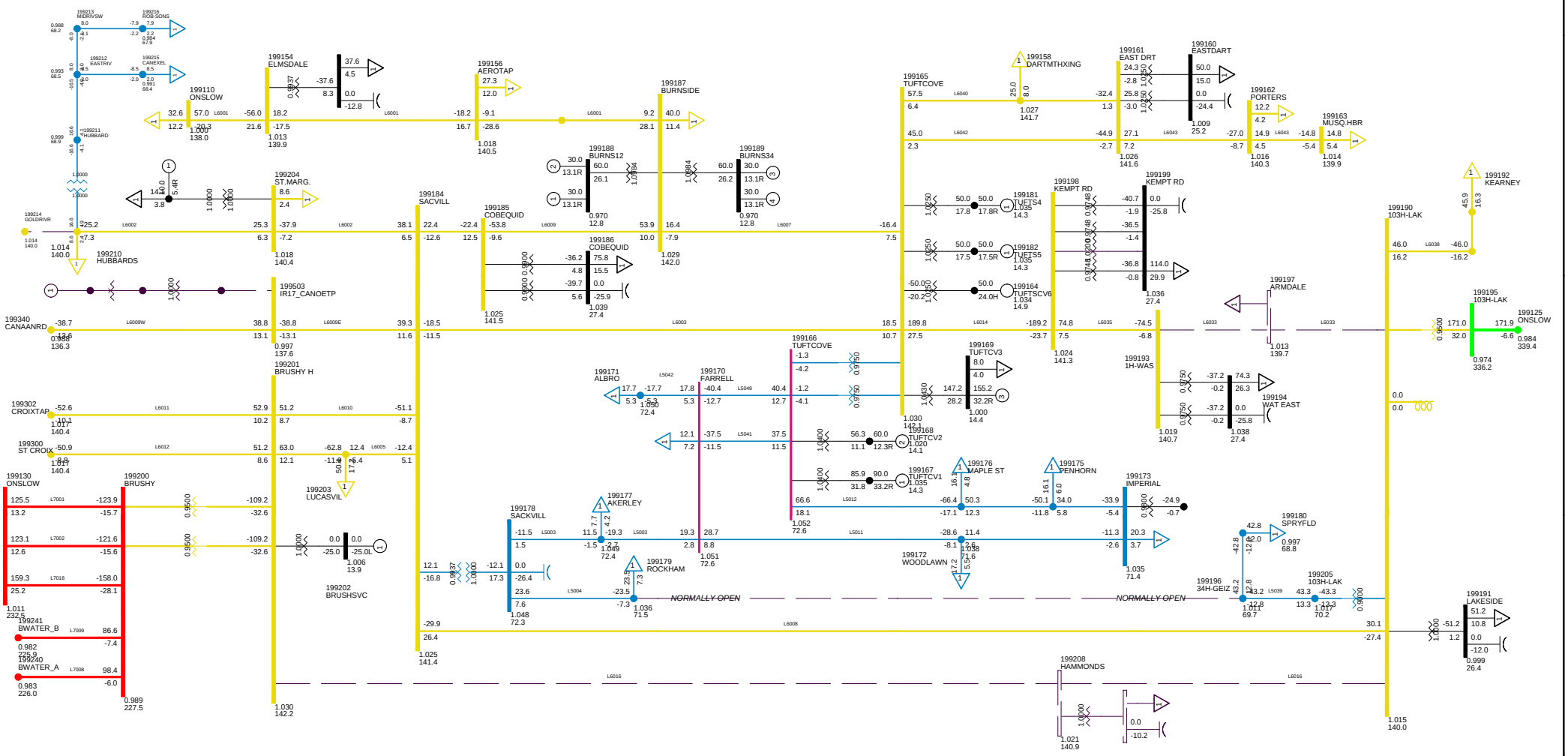

2013 WINTER PEAK NS EXPORT 200
C31 LOSE L6033
METRO ZONE WED, DEC 10 2008 9:50

Bus - VOLTAGE (KV/PU)
Branch - MW/MVAR
Equipment - MW/MVAR
100.0%RATE8
1.050OV 0.950UV
KV: <=30.000 <=69.000 <=138.000 <=230.000 <=345.000 >345.000

Figure __

Total Wind Gen: 290.1 MW | Gross Tupper 165.0 MW | Gross Wreck Cove 200.0 MW

Gross Lingan 648.0 MW | Gross Trenton 325.0 MW | Gross Gas Turbine 210.0 MW

Gross Pt Aconi 195.0 MW | Gross Tuft's Cove 455.2 MW | Gross Small Hydro 182.4 MW

Net Stora Load 178.4 MW | Total BMPC Load 108.5 MW

NSX 199.5 MW

CBX 789.8 MW

ONI 1011.7 MW

ONS 700.5 MW

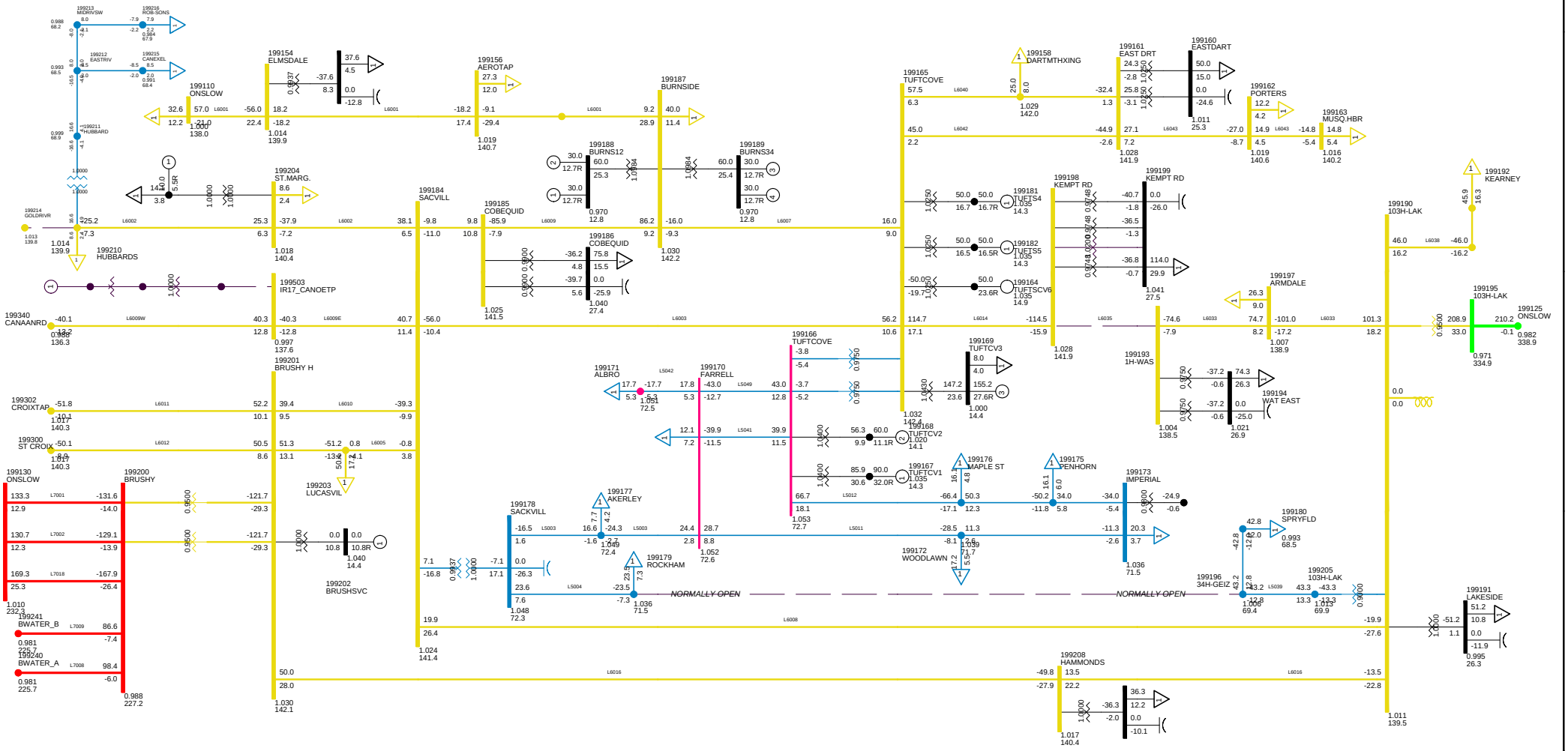

2013 WINTER PEAK NS EXPORT 200
C32 LOSE L6035
METRO ZONE WED, DEC 10 2008 9:50

Bus - VOLTAGE (KV/PU)
Branch - MW/MVAR
Equipment - MW/MVAR
100.0%RATE8
1.050OV 0.950UV
KV: <=30.000 <=69.000 <=138.000 <=230.000 <=345.000 >345.000

Figure __

Total Wind Gen: 290.1 MW | Gross Tupper 165.0 MW | Gross Wreck Cove 200.0 MW

Gross Lingan 648.0 MW | Gross Trenton 325.0 MW | Gross Gas Turbine 210.0 MW

Gross Pt Aconi 195.0 MW | Gross Tuft's Cove 455.2 MW | Gross Small Hydro 182.4 MW

Net Stora Load 178.4 MW | Total BMPC Load 108.5 MW

NSX 237.7 MW

CBX 789.6 MW

ONI 1011.1 MW

ONS 661.9 MW

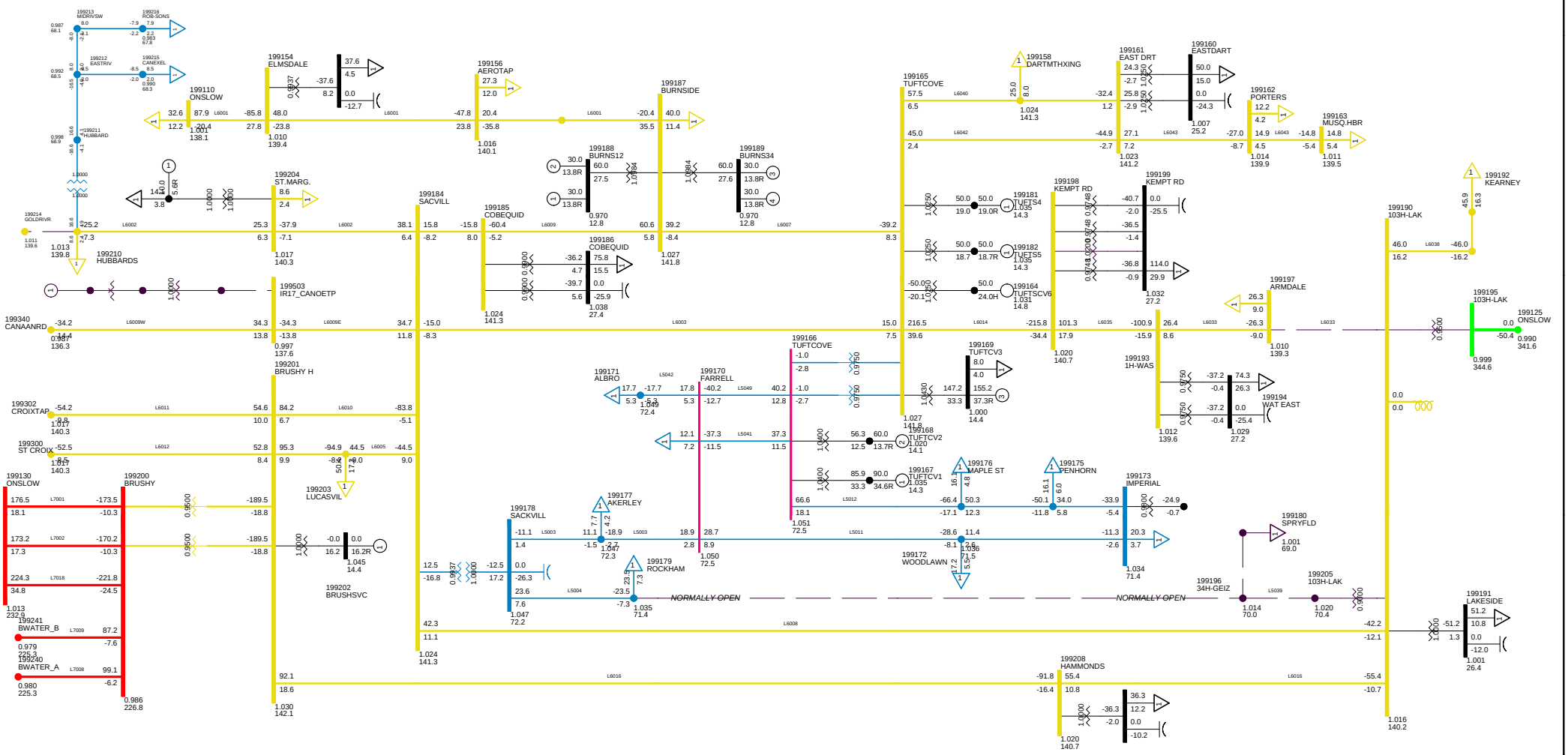

2013 WINTER PEAK NS EXPORT 200
C33 LOSE 103H-B61
METRO ZONE WED, DEC 10 2008 9:51

Bus - VOLTAGE (KV/PU)
Branch - MW/MVAR
Equipment - MW/MVAR
100.0%RATE8
1.050OV 0.950UV
KV: <=30.000 <=69.000 <=138.000 <=230.000 <=345.000 >345.000

Figure __

Total Wind Gen: 290.1 MW | Gross Tupper 165.0 MW | Gross Wreck Cove 200.0 MW

Gross Lingan 648.0 MW | Gross Trenton 325.0 MW | Gross Gas Turbine 210.0 MW

Gross Pt Aconi 195.0 MW | Gross Tuft's Cove 405.2 MW | Gross Small Hydro 182.4 MW

Net Stora Load 178.4 MW | Total BMPC Load 108.5 MW

NSX 192.1 MW

CBX 789.6 MW

ONI 1011.1 MW

ONS 707.7 MW

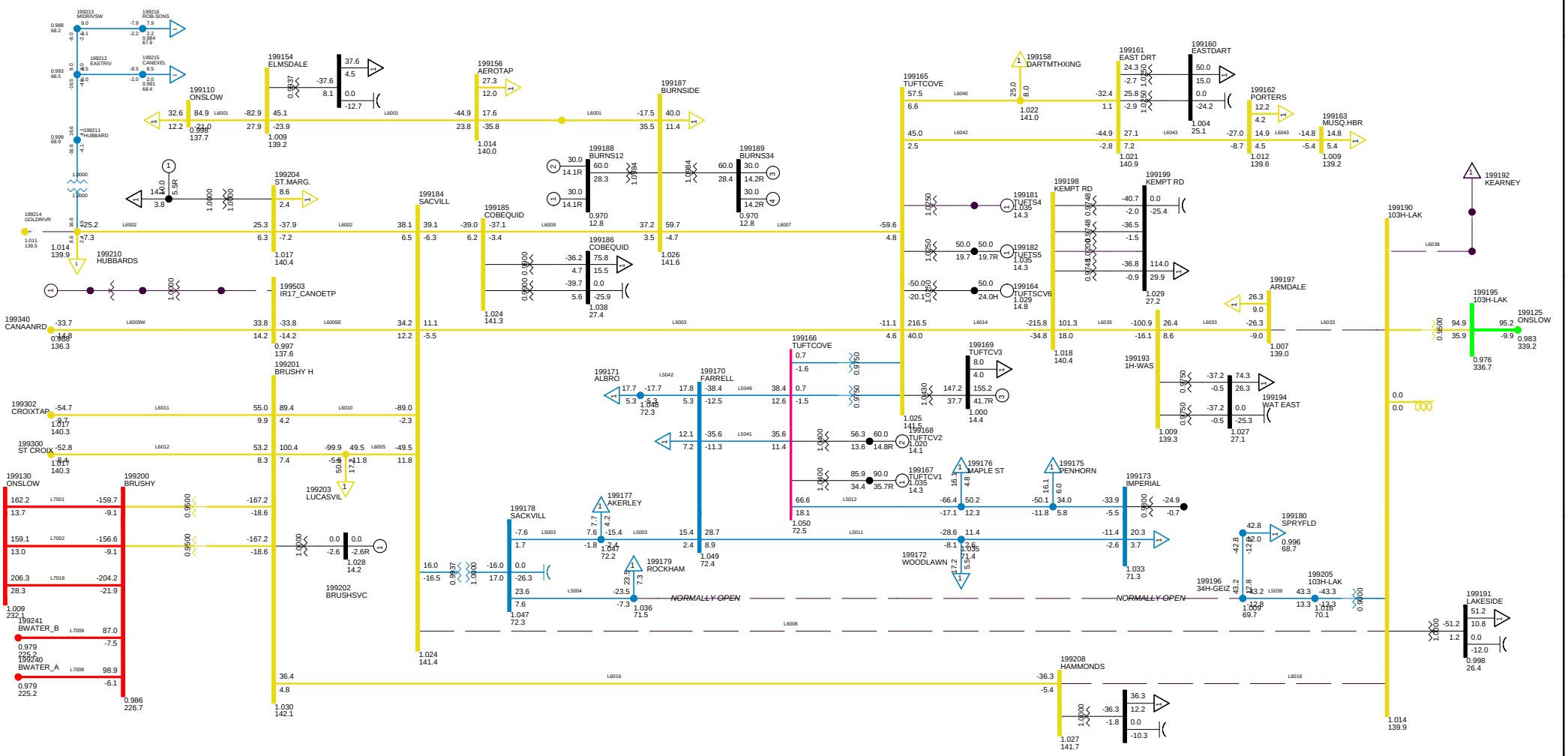

2013 WINTER PEAK NS EXPORT 200
C34 LOSE 103H-B62
METRO ZONE WED, DEC 10 2008 9:51

Bus - VOLTAGE (KV/PU)
Branch - MW/MVAR
Equipment - MW/MVAR
100.0%RATE8
1.050OV 0.950UV
KV: <=30.000 <=69.000 <=138.000 <=230.000 <=345.000 >345.000

Figure __

Total Wind Gen: 290.1 MW | Gross Tupper 165.0 MW | Gross Wreck Cove 200.0 MW

Gross Lingan 648.0 MW | Gross Trenton 325.0 MW | Gross Gas Turbine 210.0 MW

Gross Pt Aconi 195.0 MW | Gross Tuft's Cove 455.2 MW | Gross Small Hydro 182.4 MW

Net Stora Load 178.4 MW | Total BMPC Load 108.5 MW

NSX 199.8 MW

CBX 789.8 MW

ONI 1011.7 MW

ONS 700.3 MW

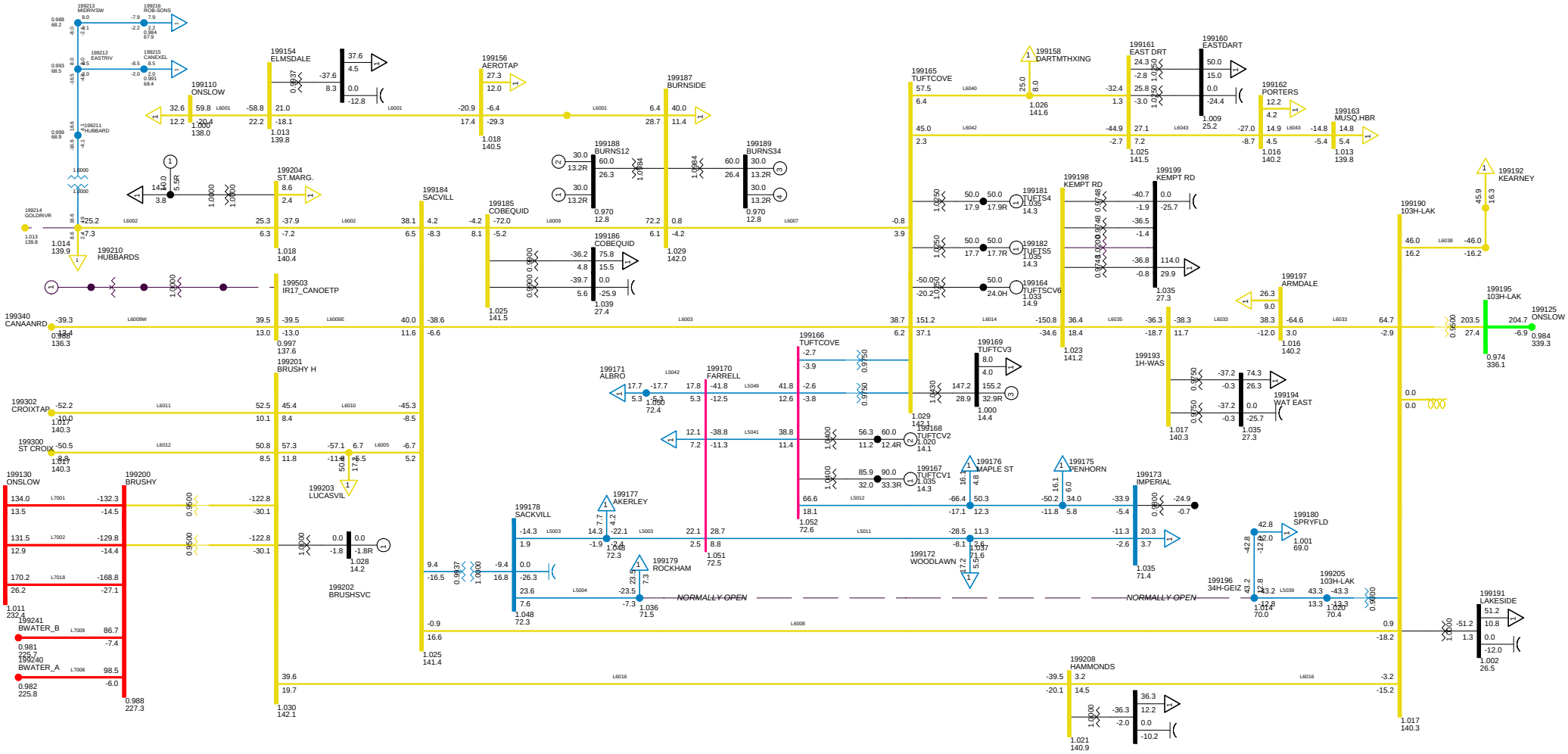

2013 WINTER PEAK WITH DSM - DELIVER RESERVE
NS-NB=200; NB-NE=500; CBX=790; ONI=1015 ONS=704
METRO ZONE WED, DEC 10 2008 9:51

Bus - VOLTAGE (KV/PU)
Branch - MW/MVAR
Equipment - MW/MVAR
100.0%RATE8
1.050OV 0.950UV
KV: <=30.000 <=69.000 <=138.000 <=230.000 <=345.000 >345.000

Figure __

Total Wind Gen: 290.1 MW
Gross Tupper 165.0 MW
Gross Wreck Cove 200.0 MW
Gross Lingan 648.0 MW
Gross Trenton 325.0 MW
Gross Gas Turbine 210.0 MW
Gross Pt Aconi 195.0 MW
Gross Tuft's Cove 455.2 MW
Gross Small Hydro 182.4 MW
Net Stora Load 178.4 MW
Total BMPC Load 108.5 MW

NSX 250.9 MW
CBX 790.0 MW
ONI 1011.9 MW
ONS 649.0 MW

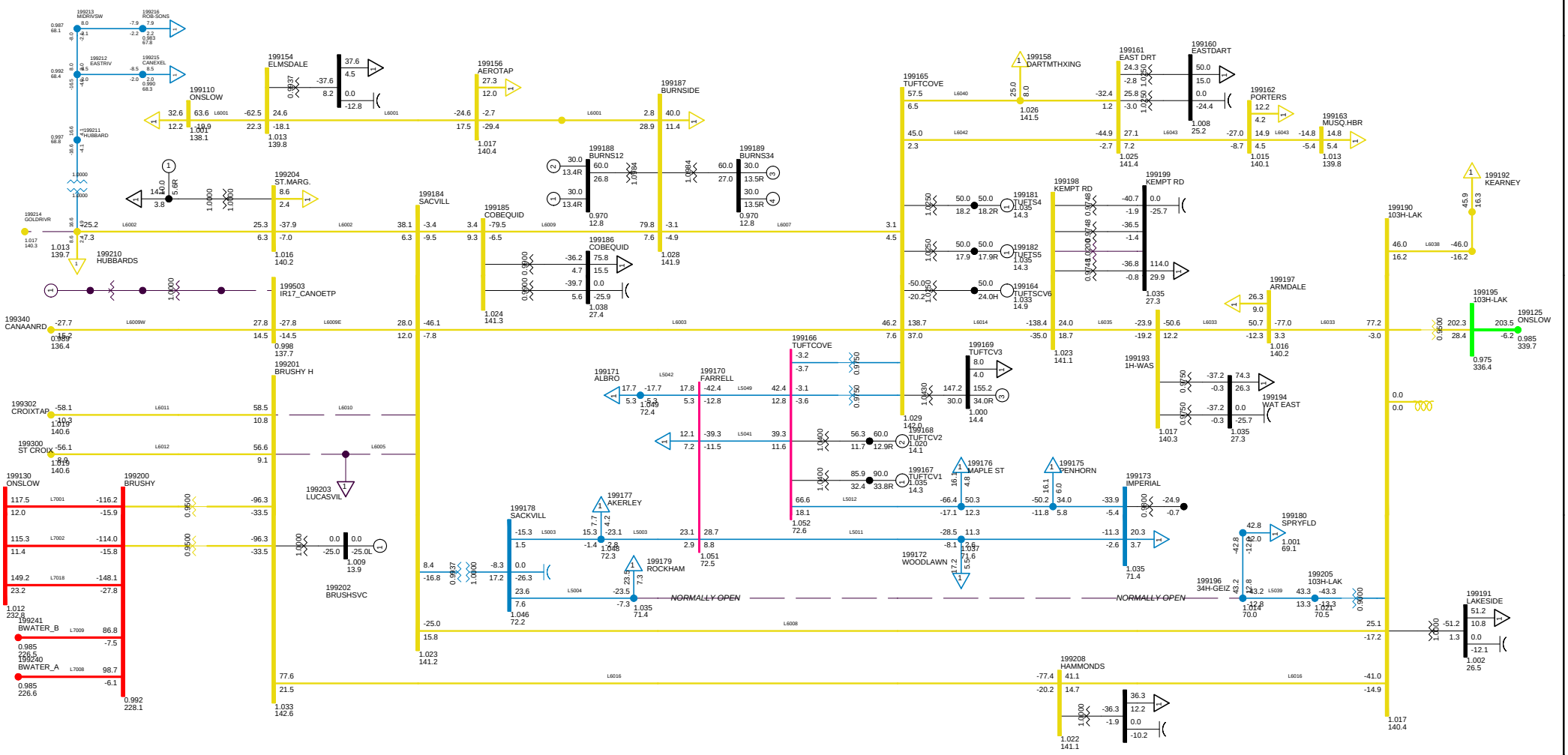

2013 WINTER PEAK NS EXPORT 200
C35 DCT L6005+L6010
METRO ZONE WED, DEC 10 2008 9:51

Bus - VOLTAGE (KV/PU)
Branch - MW/MVAR
Equipment - MW/MVAR
100.0%RATE8
1.050OV 0.950UV
KV: <=30.000 <=69.000 <=138.000 <=230.000 <=345.000 >345.000

Figure __

Total Wind Gen: 290.1 MW | Gross Tupper 165.0 MW | Gross Wreck Cove 200.0 MW

Gross Lingan 648.0 MW | Gross Trenton 325.0 MW | Gross Gas Turbine 210.0 MW

Gross Pt Aconi 195.0 MW | Gross Tuft's Cove 455.2 MW | Gross Small Hydro 182.4 MW

Net Stora Load 178.4 MW | Total BMPC Load 108.5 MW

NSX 251.0 MW

CBX 789.9 MW

ONI 1011.8 MW

ONS 648.8 MW

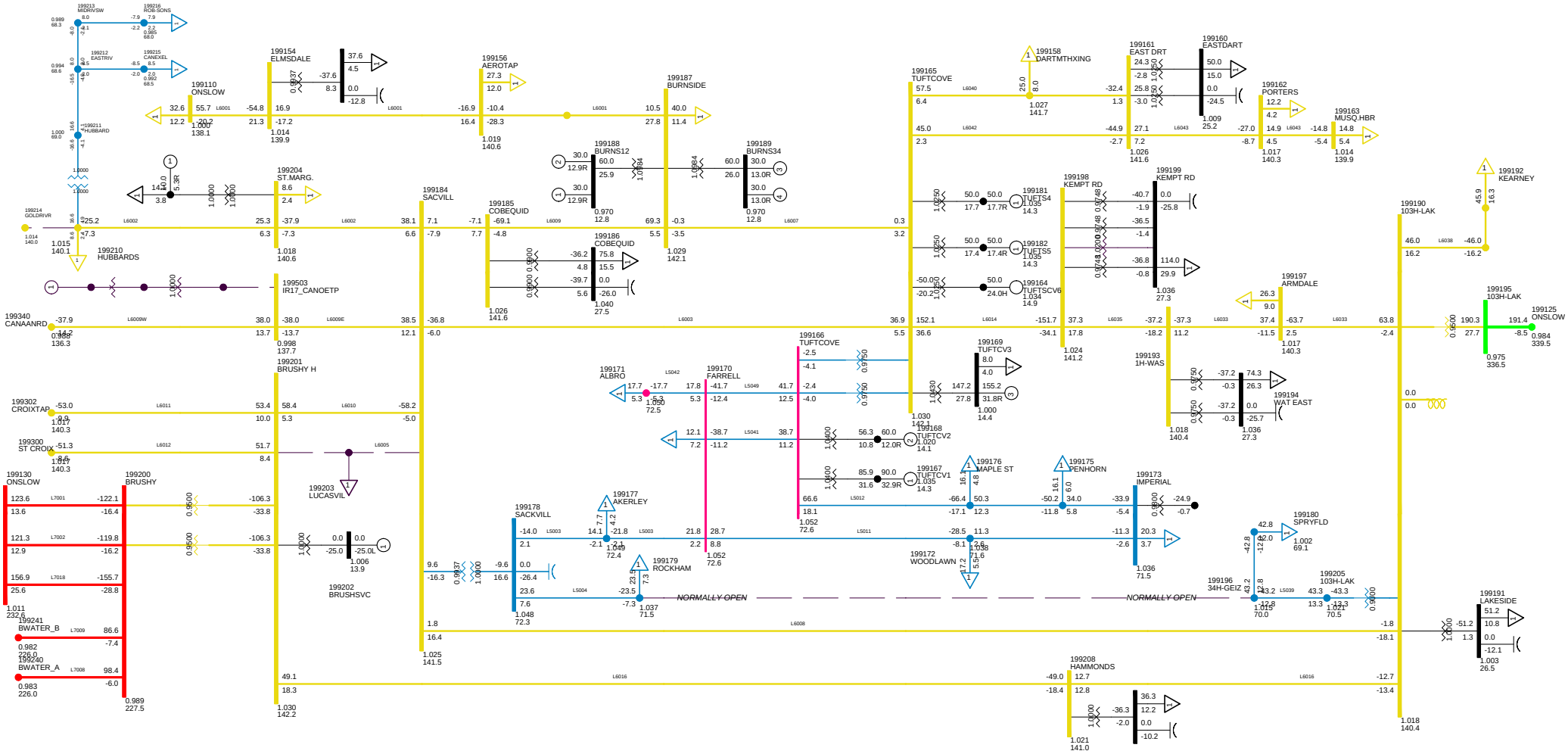

2013 WINTER PEAK WITH DSM - DELIVER RESERVE
NS-NB=200; NB-NE=500; CBX=790; ONI=1015 ONS=704
METRO ZONE WED, DEC 10 2008 9:51

Bus - VOLTAGE (KV/PU)
Branch - MW/MVAR
Equipment - MW/MVAR
100.0%RATE8
1.050OV 0.950UV
KV: <=30.000 <=69.000 <=138.000 <=230.000 <=345.000 >345.000

Figure __

Total Wind Gen: 290.1 MW
Gross Tupper 165.0 MW
Gross Wreck Cove 200.0 MW
Gross Lingan 648.0 MW
Gross Trenton 325.0 MW
Gross Gas Turbine 210.0 MW
Gross Pt Aconi 195.0 MW
Gross Tuft's Cove 455.2 MW
Gross Small Hydro 182.4 MW
Net Stora Load 178.4 MW
Total BMPC Load 108.5 MW

NSX 287.9 MW
CBX 790.0 MW
ONI 1012.0 MW
ONS 611.8 MW

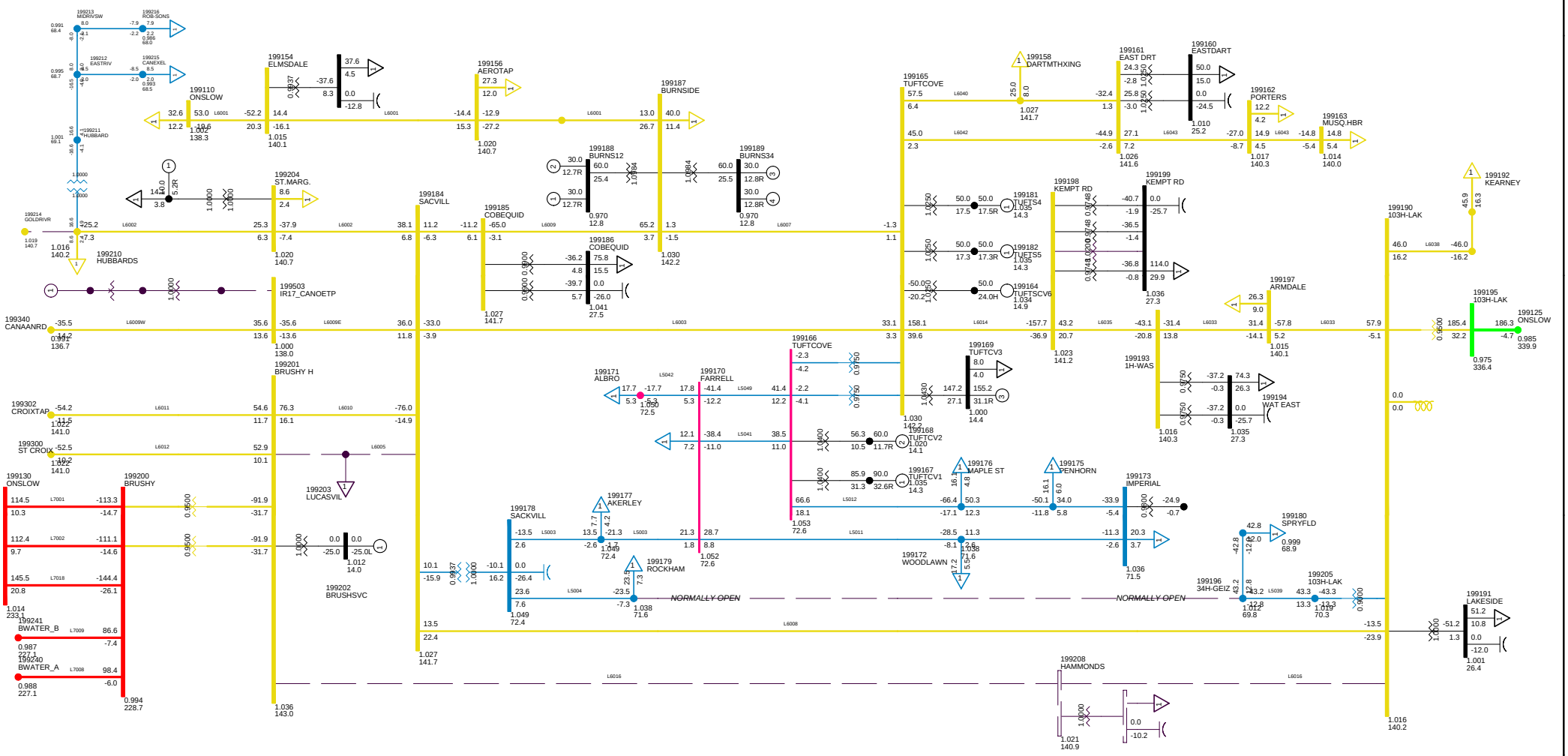

2013 WINTER PEAK NS EXPORT 200
C37 DCT L6005 L6016
METRO ZONE WED, DEC 10 2008 9:51

Bus - VOLTAGE (KV/PU)
Branch - MW/MVAR
Equipment - MW/MVAR
100.0%RATE8
1.050OV 0.950UV
KV: <=30.000 <=69.000 <=138.000 <=230.000 <=345.000 >345.000

Figure __

Total Wind Gen: 290.1 MW | Gross Tupper 165.0 MW | Gross Wreck Cove 200.0 MW

Gross Lingan 648.0 MW | Gross Trenton 325.0 MW | Gross Gas Turbine 210.0 MW

Gross Pt Aconi 195.0 MW | Gross Tuft's Cove 455.2 MW | Gross Small Hydro 182.4 MW

Net Stora Load 178.4 MW | Total BMPC Load 108.5 MW

NSX 276.4 MW

CBX 789.9 MW

ONI 1011.9 MW

ONS 623.1 MW

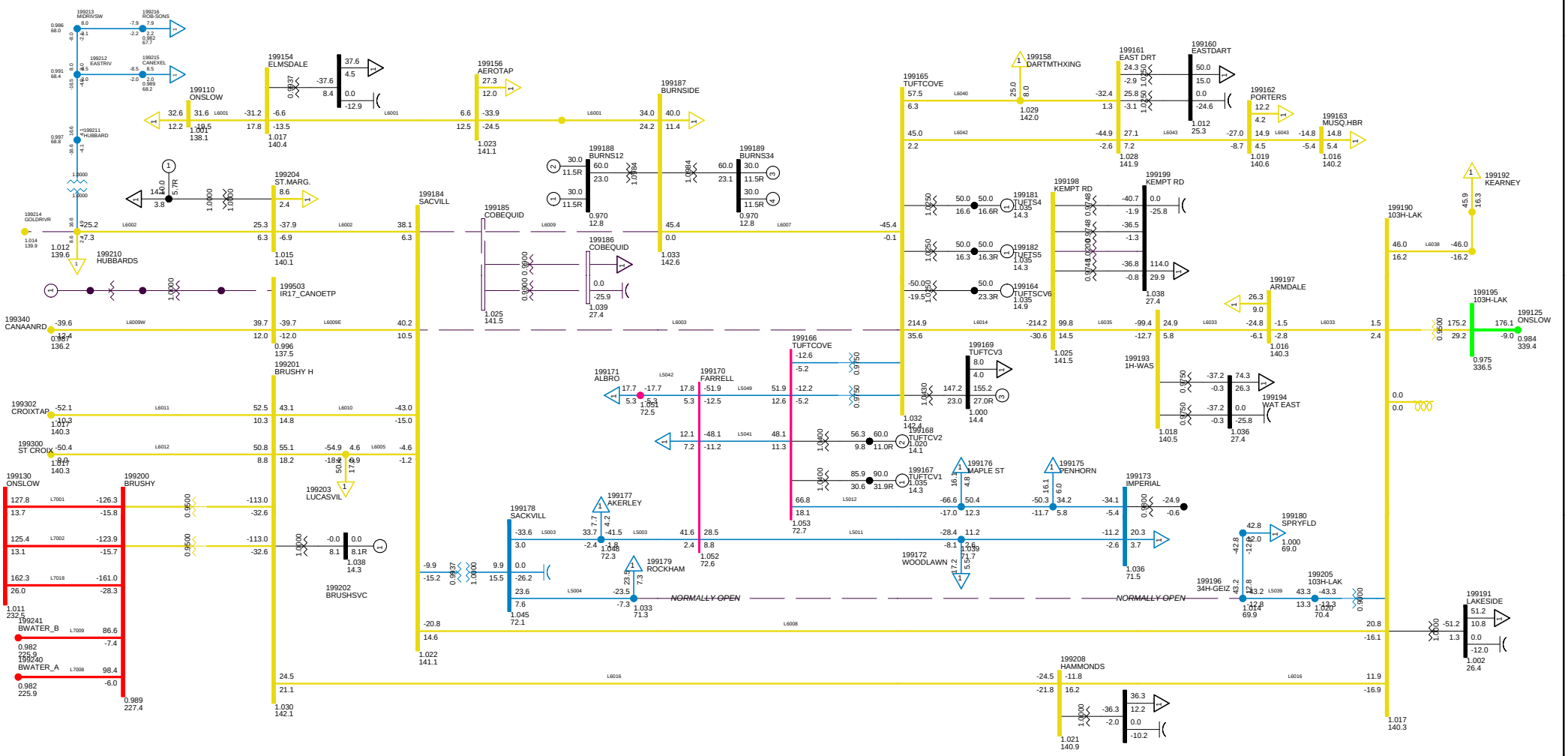

2013 WINTER PEAK NS EXPORT 200
C38 DCT L6003 L6009
METRO ZONE WED, DEC 10 2008 9:52

Bus - VOLTAGE (KV/PU)
Branch - MW/MVAR
Equipment - MW/MVAR
100.0%RATE8
1.050OV 0.950UV
KV: <=30.000 <=69.000 <=138.000 <=230.000 <=345.000 >345.000

Figure __

Total Wind Gen: 290.1 MW | Gross Tupper 165.0 MW | Gross Wreck Cove 200.0 MW

Gross Lingan 648.0 MW | Gross Trenton 325.0 MW | Gross Gas Turbine 210.0 MW

Gross Pt Aconi 195.0 MW | Gross Tuft's Cove 455.2 MW | Gross Small Hydro 182.4 MW

Net Stora Load 178.4 MW | Total BMPC Load 108.5 MW

NSX 199.7 MW

CBX 789.8 MW

ONI 1011.7 MW

ONS 700.4 MW

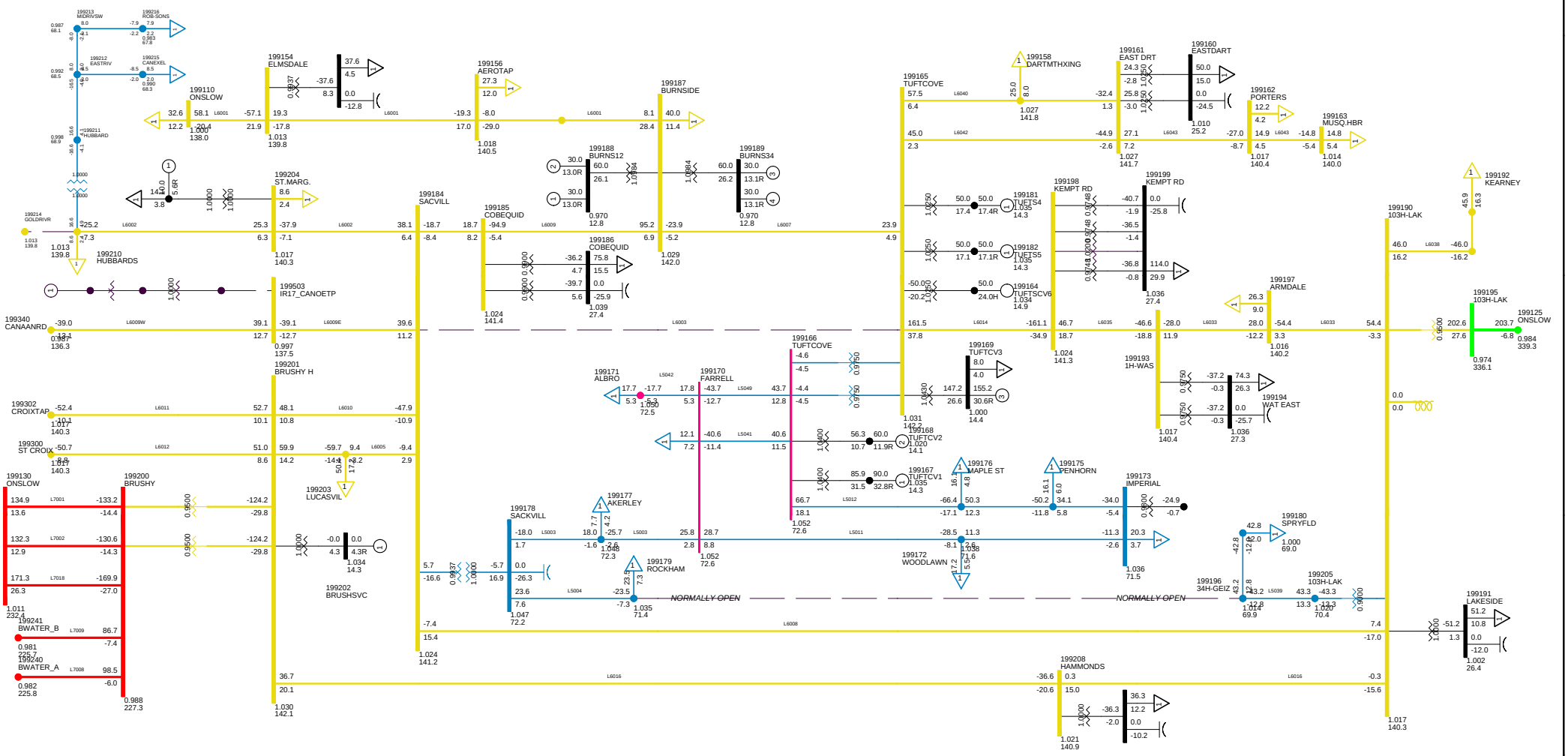

2013 WINTER PEAK NS EXPORT 200
C39 DCT L6003 L6007
METRO ZONE WED, DEC 10 2008 9:52

Bus - VOLTAGE (KV/PU)
Branch - MW/MVAR
Equipment - MW/MVAR
100.0%RATE8
1.050OV 0.950UV
KV: <=30.000 <=69.000 <=138.000 <=230.000 <=345.000 >345.000

Figure __

Total Wind Gen: 259.5 MW
Gross Tupper 165.0 MW
Gross Wreck Cove 200.0 MW
Gross Lingan 648.0 MW
Gross Trenton 325.0 MW
Gross Gas Turbine 186.0 MW
Gross Pt Aconi 195.0 MW
Gross Tuft's Cove 455.2 MW
Gross Small Hydro 130.4 MW
Net Stora Load 178.4 MW
Total BMPC Load 0.0 MW

NSX 401.2 MW
CBX 790.1 MW
ONI 1012.1 MW
ONS 497.2 MW

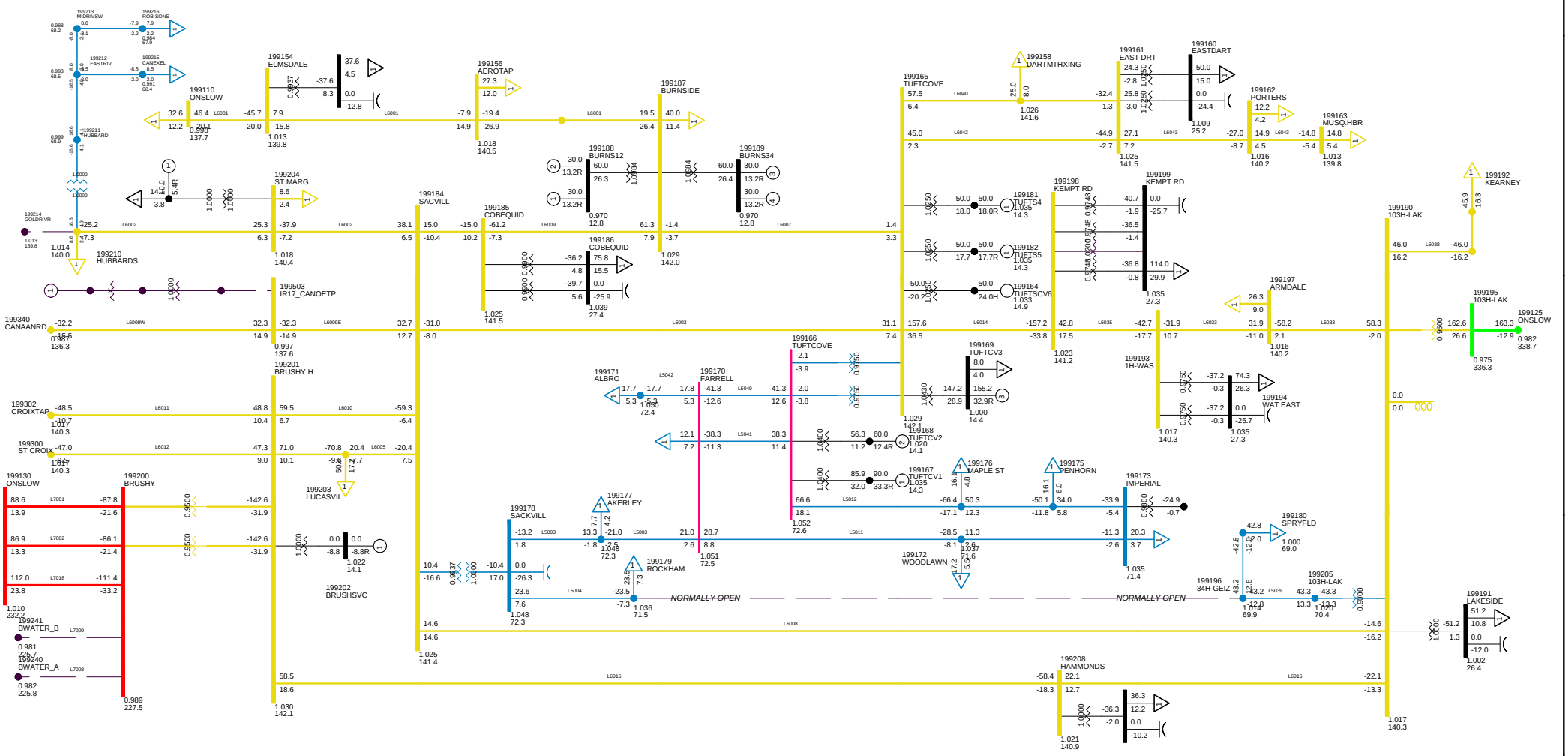

2013 WINTER PEAK NS EXPORT 200
C40 DCT L7008 L7009 ISOLATES WEST
METRO ZONE WED, DEC 10 2008 9:52

Bus - VOLTAGE (KV/PU)
Branch - MW/MVAR
Equipment - MW/MVAR
100.0%RATE B
1.050OV 0.950UV
KV: <=30.000 <=69.000 <=138.000 <=230.000 <=345.000 >345.000

Figure __

Total Wind Gen: 290.1 MW
Gross Tupper 165.0 MW
Gross Wreck Cove 200.0 MW
Gross Lingan 648.0 MW
Gross Trenton 325.0 MW
Gross Gas Turbine 210.0 MW
Gross Pt Aconi 195.0 MW
Gross Tuft's Cove 455.2 MW
Gross Small Hydro 182.4 MW
Net Stora Load 178.4 MW
Total BMPC Load 108.5 MW

NSX 287.9 MW
CBX 790.0 MW
ONI 1012.0 MW
ONS 611.8 MW

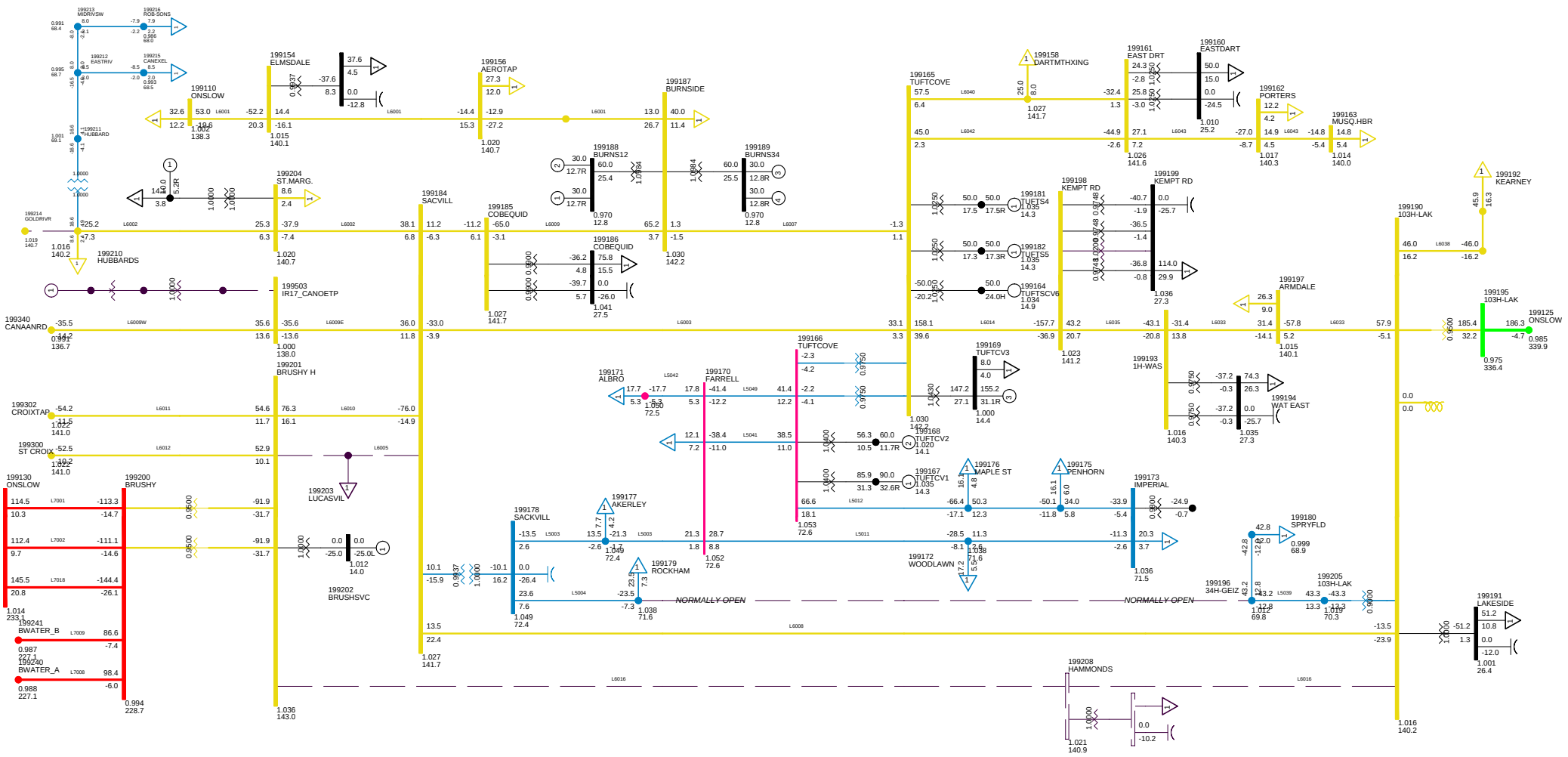

2013 WINTER PEAK NS EXPORT 200
C41 1P FAULT ON L6016, BBU 622
METRO ZONE WED, DEC 10 2008 9:52

Bus - VOLTAGE (KV/PU)
Branch - MW/MVAR
Equipment - MW/MVAR
100.0%RATE8
1.050OV 0.950UV
KV: <=30.000 <=69.000 <=138.000 <=230.000 <=345.000 >345.000

Figure __

Total Wind Gen: 290.1 MW
Gross Tupper 165.0 MW
Gross Wreck Cove 200.0 MW
Gross Lingan 648.0 MW
Gross Trenton 325.0 MW
Gross Gas Turbine 210.0 MW
Gross Pt Aconi 195.0 MW
Gross Tuft's Cove 455.2 MW
Gross Small Hydro 182.4 MW
Net Stora Load 178.4 MW
Total BMPC Load 108.5 MW

NSX 265.4 MW
CBX 789.7 MW
ONI 1011.2 MW
ONS 634.1 MW

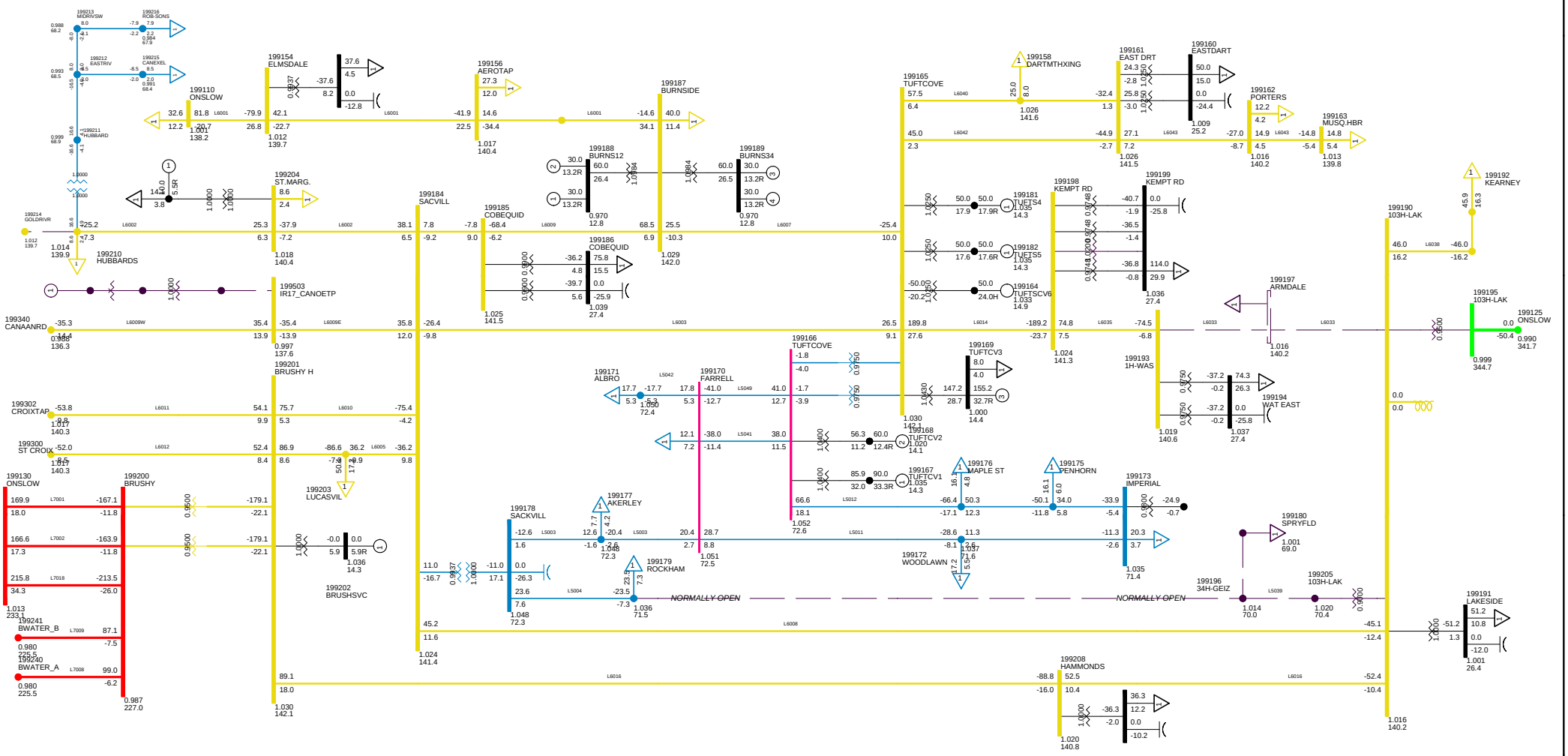

2013 WINTER PEAK NS EXPORT 200
C42 1P L6033, BBU 103H-632
METRO ZONE WED, DEC 10 2008 9:52

Bus - VOLTAGE (KV/PU)
Branch - MW/MVAR
Equipment - MW/MVAR
100.0%RATE8
1.050OV 0.950UV
KV: <=30.000 <=69.000 <=138.000 <=230.000 <=345.000 >345.000

Figure __

Total Wind Gen: 290.1 MW | Gross Tupper 165.0 MW | Gross Wreck Cove 200.0 MW

Gross Lingan 648.0 MW | Gross Trenton 325.0 MW | Gross Gas Turbine 210.0 MW

Gross Pt Aconi 195.0 MW | Gross Tuft's Cove 455.2 MW | Gross Small Hydro 182.4 MW

Net Stora Load 178.4 MW | Total BMPC Load 108.5 MW

NSX 250.9 MW

CBX 790.0 MW

ONI 1011.9 MW

ONS 649.0 MW

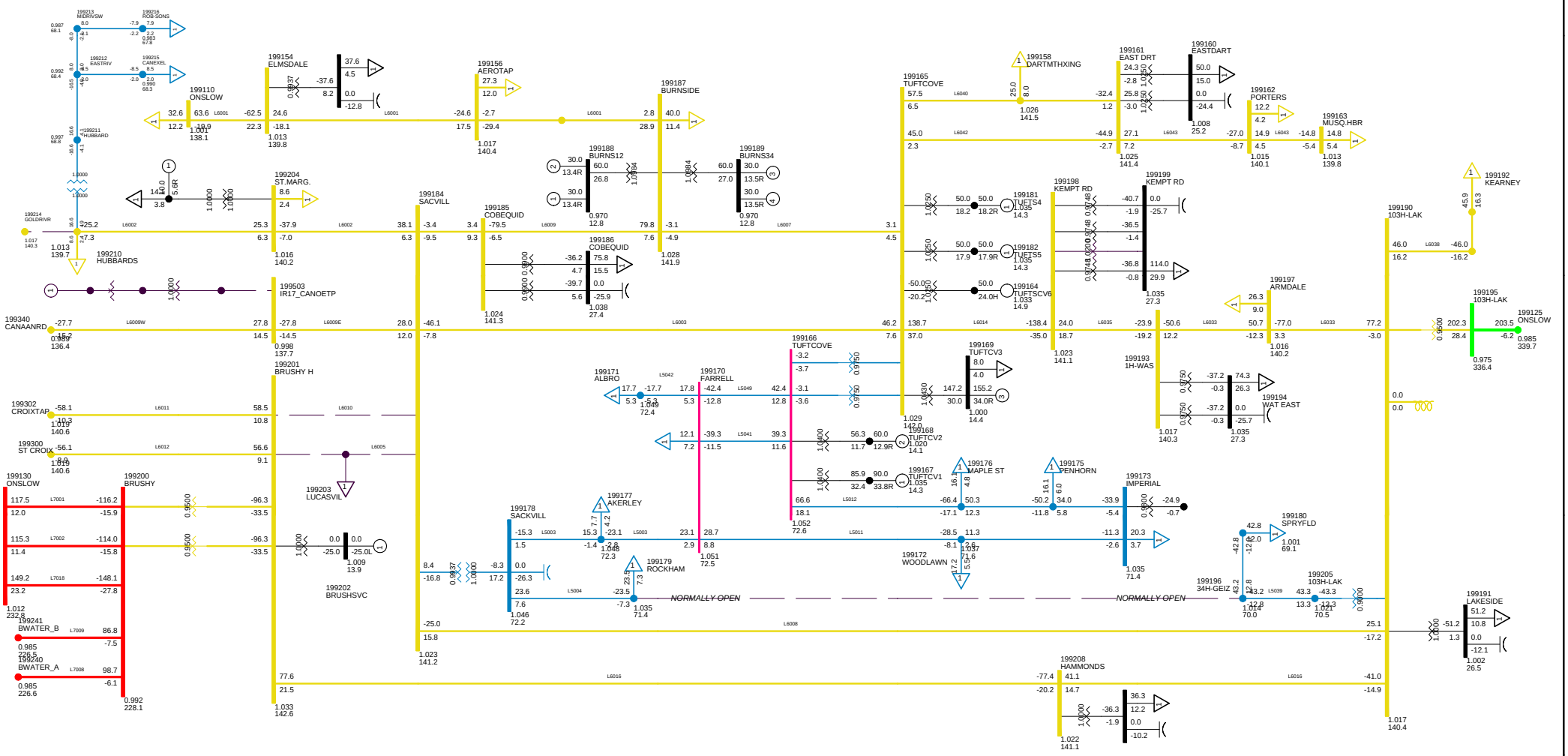

2013 WINTER PEAK NS EXPORT 200
C43 BBU L6005 L6010 90H-608
METRO ZONE WED, DEC 10 2008 9:52

Bus - VOLTAGE (KV/PU)
Branch - MW/MVAR
Equipment - MW/MVAR
100.0%RATE8
1.050OV 0.950UV
KV: <=30.000 <=69.000 <=138.000 <=230.000 <=345.000 >345.000

Figure __

Total Wind Gen: 290.1 MW
Gross Tupper 165.0 MW
Gross Wreck Cove 200.0 MW
Gross Lingan 648.0 MW
Gross Trenton 325.0 MW
Gross Gas Turbine 210.0 MW
Gross Pt Aconi 195.0 MW
Gross Tuft's Cove 455.2 MW
Gross Small Hydro 182.4 MW
Net Stora Load 178.4 MW
Total BMPC Load 108.5 MW

NSX 276.9 MW
CBX 789.9 MW
ONI 1011.8 MW
ONS 622.7 MW

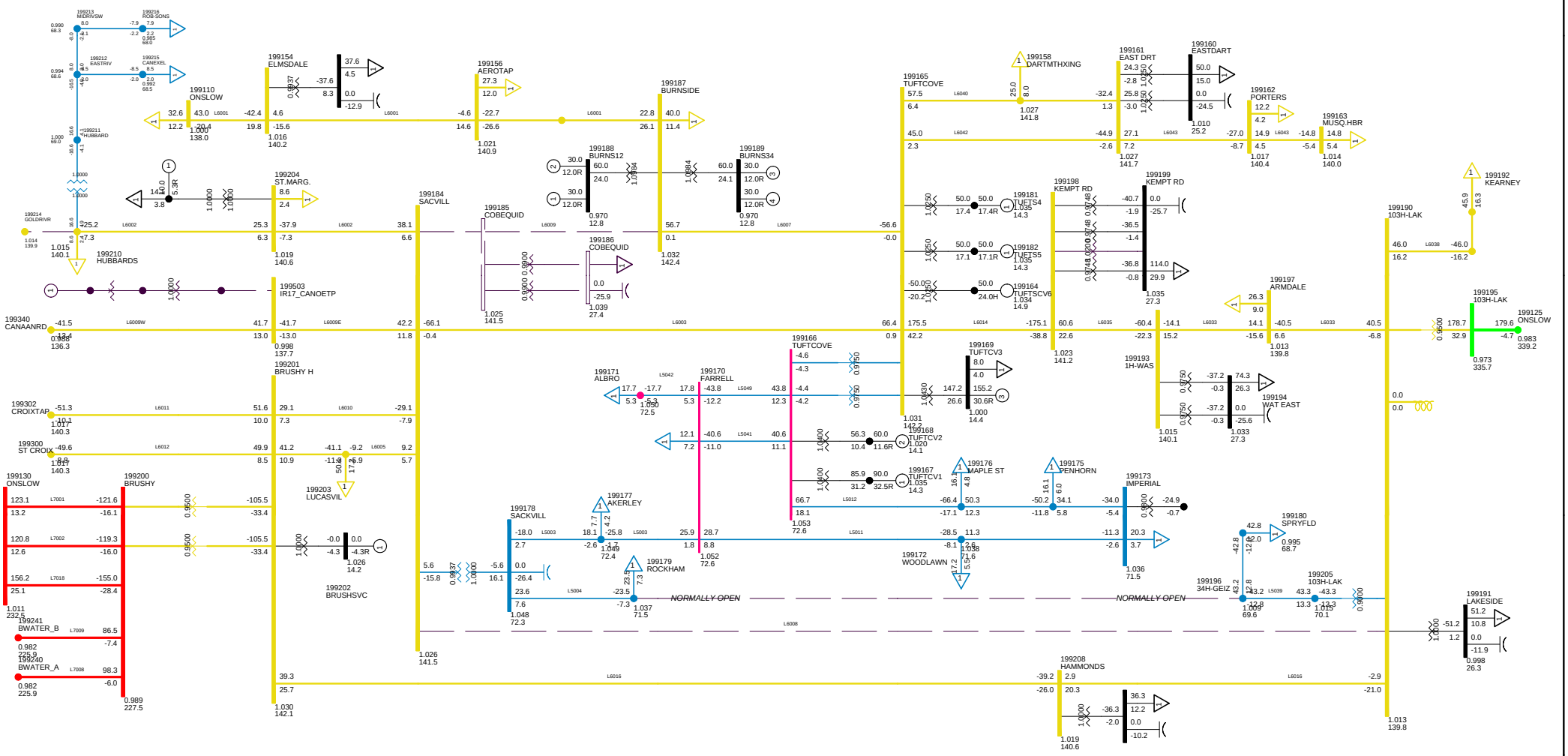

2013 WINTER PEAK NS EXPORT 200
C44 BBU L6008 L6009 90H-611
METRO ZONE WED, DEC 10 2008 9:53

Figure __

Total Wind Gen: 290.1 MW
Gross Tupper 165.0 MW
Gross Wreck Cove 200.0 MW
Gross Lingan 648.0 MW
Gross Trenton 325.0 MW
Gross Gas Turbine 210.0 MW
Gross Pt Aconi 195.0 MW
Gross Tuft's Cove 155.2 MW
Gross Small Hydro 182.4 MW
Net Stora Load 178.4 MW
Total BMPC Load 108.5 MW

NSX 30.8 MW
CBX 789.3 MW
ONI 1010.7 MW
ONS 869.2 MW

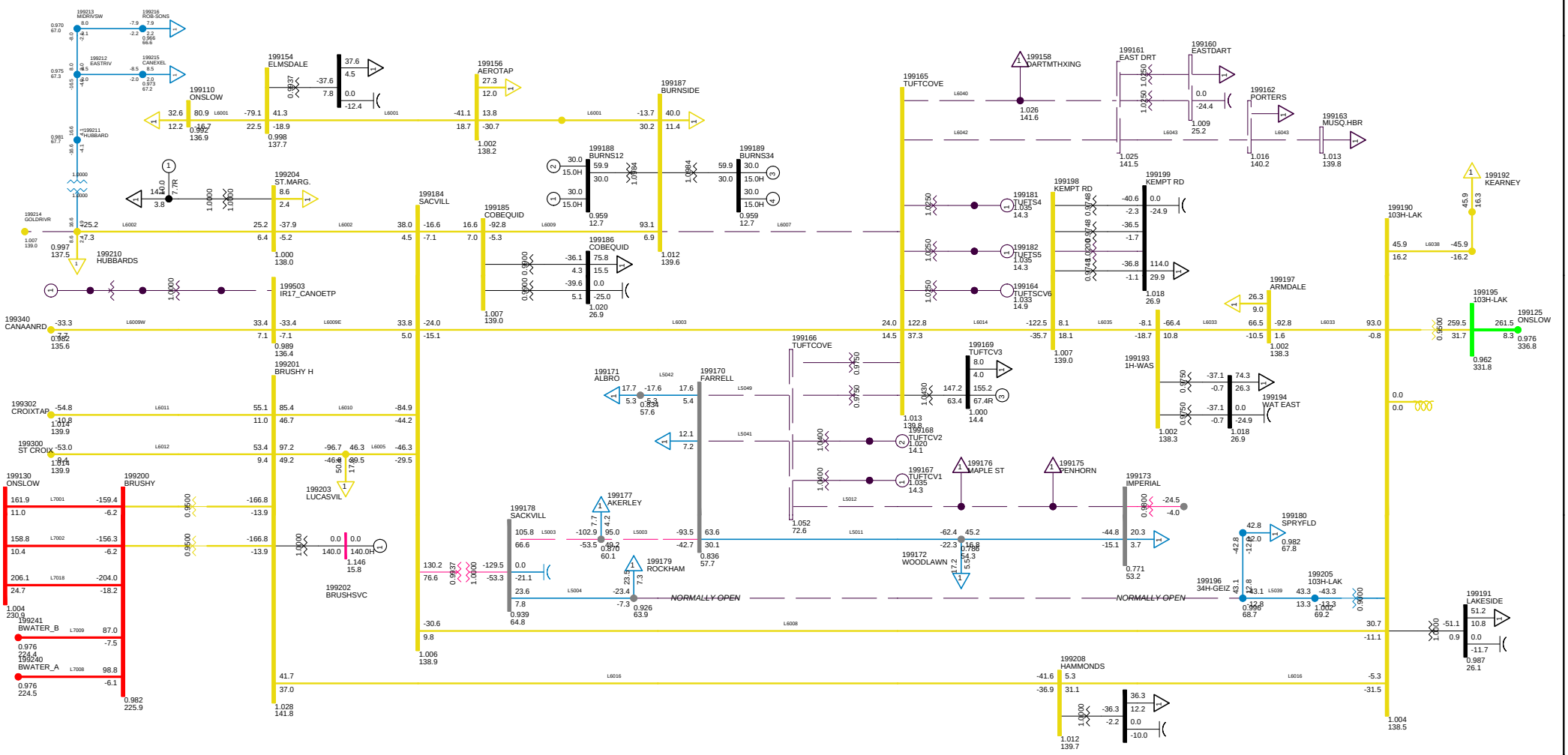

2013 WINTER PEAK NS EXPORT 200
C45 BBU ON 91H-523
METRO ZONE WED, DEC 10 2008 9:53

Bus - VOLTAGE (KV/PU)
Branch - MW/MVAR
Equipment - MW/MVAR
100.0%RATE8
1.050OV 0.950UV
KV: <=30.000 <=69.000 <=138.000 <=230.000 <=345.000 >345.000

Figure __

Total Wind Gen: 290.1 MW | Gross Tupper 165.0 MW | Gross Wreck Cove 200.0 MW

Gross Lingan 648.0 MW | Gross Trenton 325.0 MW | Gross Gas Turbine 90.0 MW

Gross Pt Aconi 195.0 MW | Gross Tuft's Cove 455.2 MW | Gross Small Hydro 182.4 MW

Net Stora Load 178.4 MW | Total BMPC Load 108.5 MW

NSX 196.4 MW

CBX 789.8 MW

ONI 1011.5 MW

ONS 703.5 MW

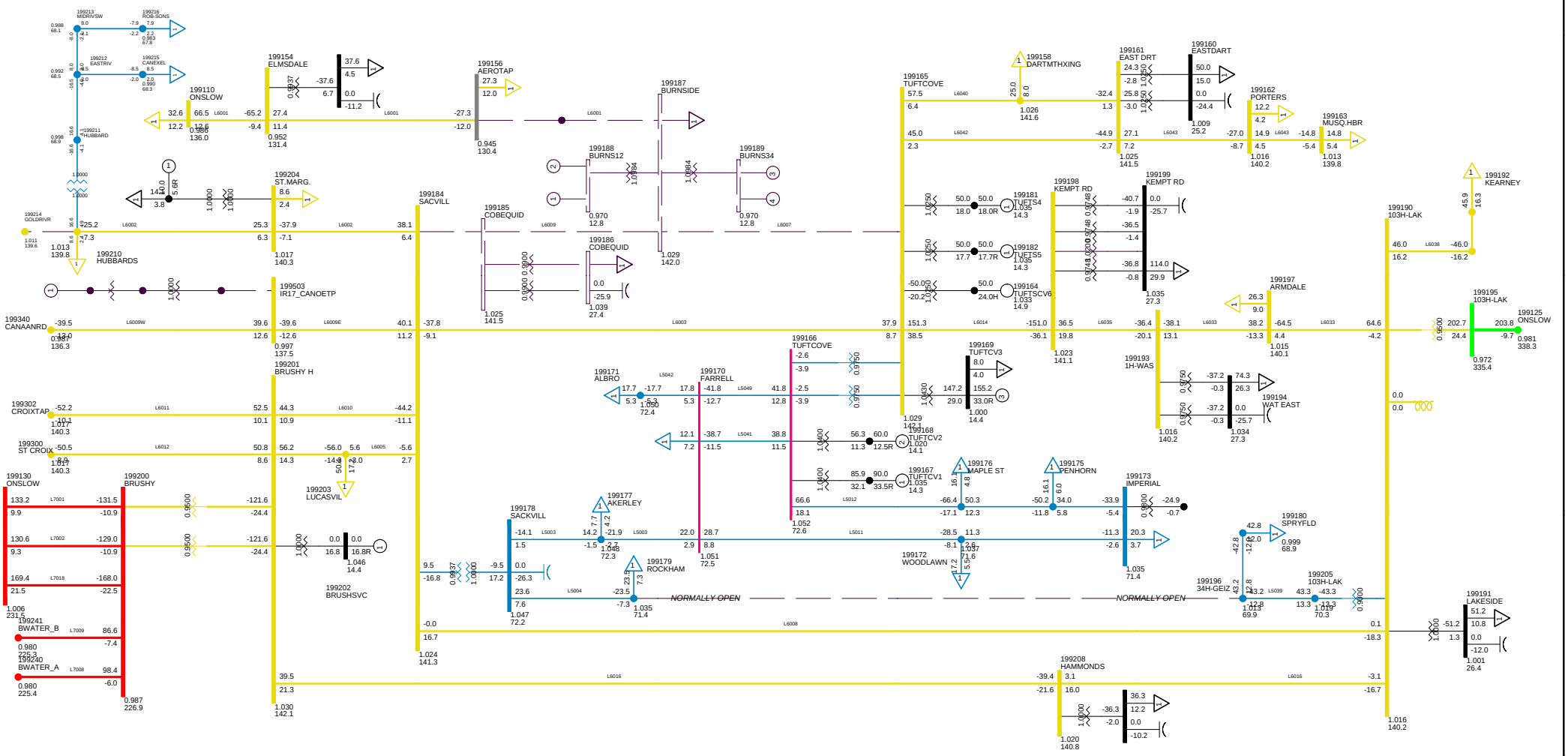

2013 WINTER PEAK NS EXPORT 200
C46 1P L6009 BBU ON 108H 607
METRO ZONE WED, DEC 10 2008 9:53

Bus - VOLTAGE (KV/PU)
Branch - MW/MVAR
Equipment - MW/MVAR
100.0%RATE8
1.050OV 0.950UV
KV: <=30.000 <=69.000 <=138.000 <=230.000 <=345.000 >345.000

Figure __

Total Wind Gen: 290.1 MW | Gross Tupper 165.0 MW | Gross Wreck Cove 200.0 MW

Gross Lingan 648.0 MW | Gross Trenton 325.0 MW | Gross Gas Turbine 210.0 MW

Gross Pt Aconi 195.0 MW | Gross Tuft's Cove 455.2 MW | Gross Small Hydro 182.4 MW

Net Stora Load 178.4 MW | Total BMPC Load 108.5 MW

NSX 338.6 MW

CBX 789.8 MW

ONI 1011.5 MW

ONS 560.5 MW

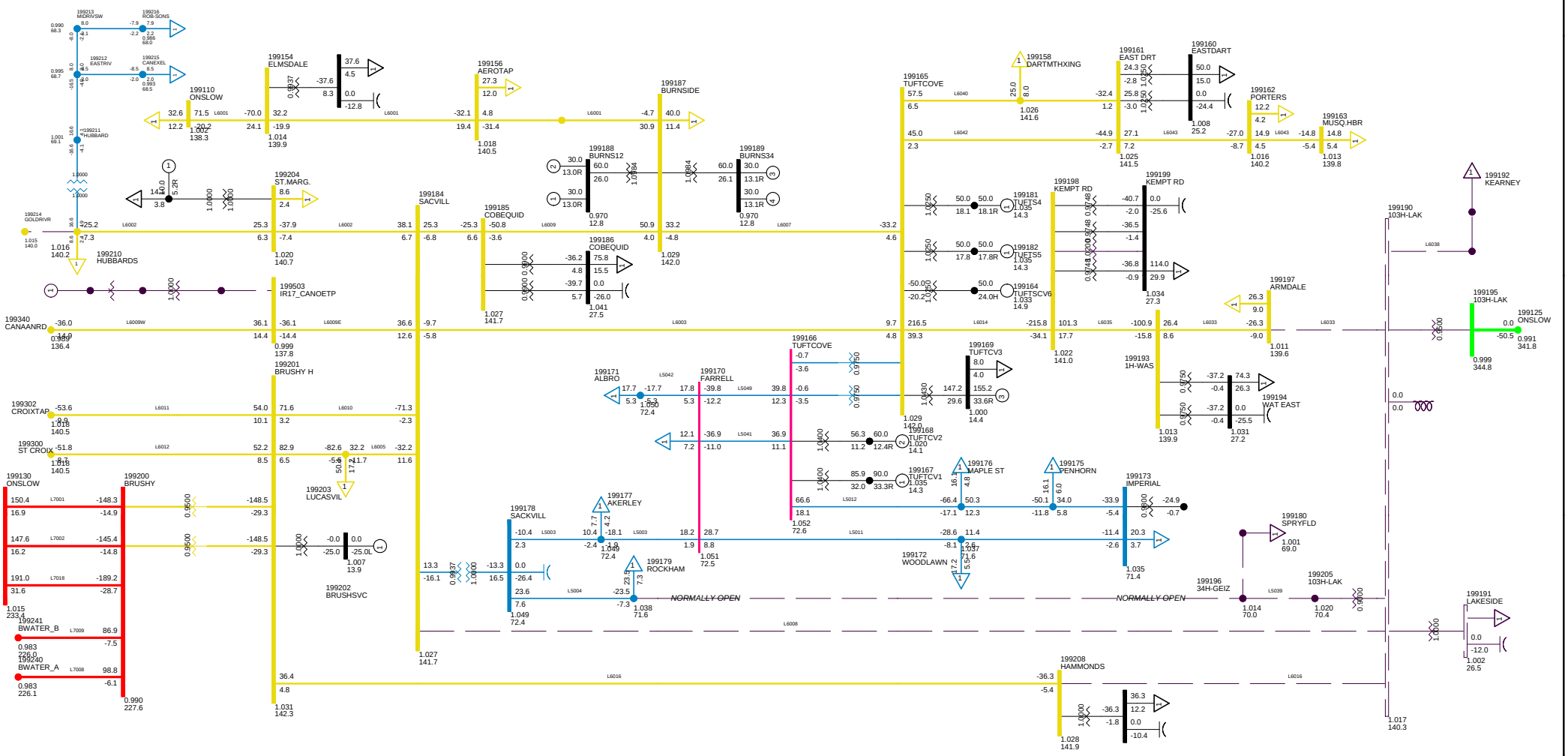

2013 WINTER PEAK NS EXPORT 200
C47 1P 103H-600
METRO ZONE WED, DEC 10 2008 9:53

Bus - VOLTAGE (KV/PU)
Branch - MW/MVAR
Equipment - MW/MVAR
100.0%RATE8
1.050OV 0.950UV
KV: <=30.000 <=69.000 <=138.000 <=230.000 <=345.000 >345.000

Figure __

Total Wind Gen: 290.1 MW | Gross Tupper 165.0 MW | Gross Wreck Cove 200.0 MW

Gross Lingan 648.0 MW | Gross Trenton 325.0 MW | Gross Gas Turbine 210.0 MW

Gross Pt Aconi 195.0 MW | Gross Tuft's Cove 455.2 MW | Gross Small Hydro 182.4 MW

Net Stora Load 178.4 MW | Total BMPC Load 108.5 MW

NSX 199.8 MW

CBX 789.8 MW

ONI 1011.7 MW

ONS 700.3 MW

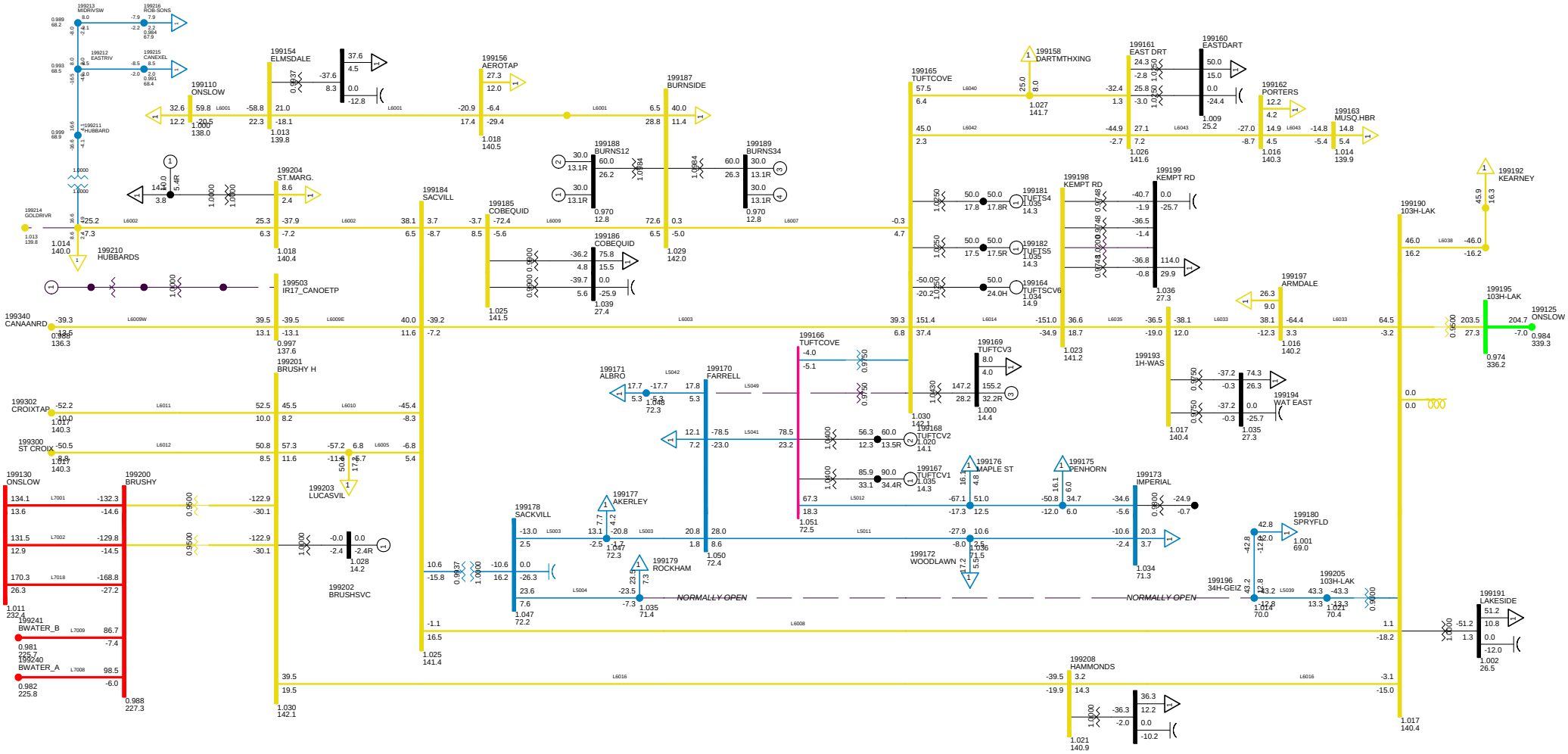

2013 WINTER PEAK NS EXPORT 200
C48 1P ON BREAKER 91H-523
METRO ZONE WED, DEC 10 2008 9:53

Bus - VOLTAGE (KV/PU)
Branch - MW/MVAR
Equipment - MW/MVAR
100.0%RATE8
1.050OV 0.950UV
KV: <=30.000 <=69.000 <=138.000 <=230.000 <=345.000 >345.000

Figure __

Total Wind Gen: 290.1 MW | Gross Tupper 165.0 MW | Gross Wreck Cove 200.0 MW

Gross Lingan 648.0 MW | Gross Trenton 325.0 MW | Gross Gas Turbine 210.0 MW

Gross Pt Aconi 195.0 MW | Gross Tuft's Cove 455.2 MW | Gross Small Hydro 182.4 MW

Net Stora Load 178.4 MW | Total BMPC Load 108.5 MW

NSX 314.5 MW

CBX 790.0 MW

ONI 1011.9 MW

ONS 584.7 MW

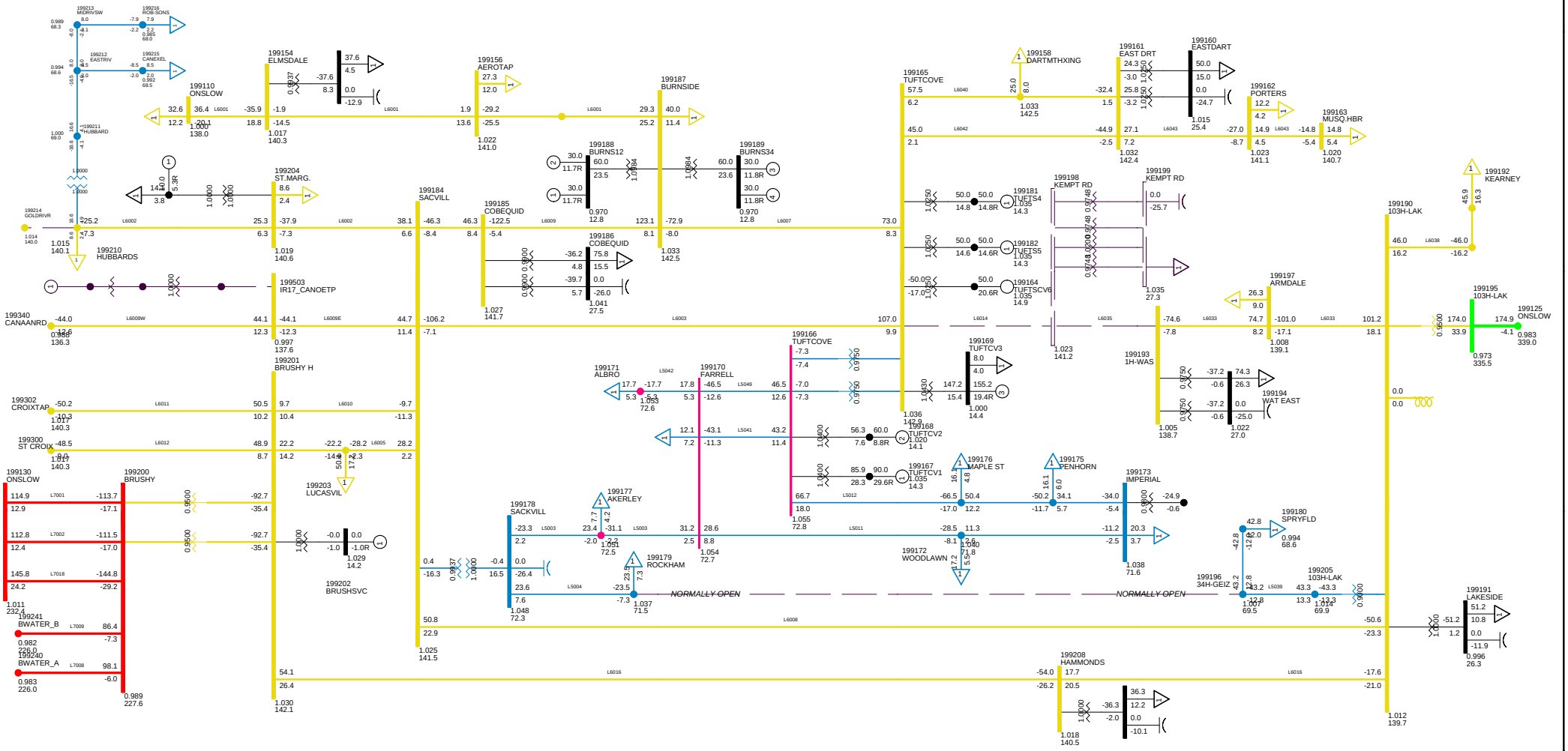

2013 WINTER PEAK NS EXPORT 200
C49 1-PH ON 104H-600
METRO ZONE WED, DEC 10 2008 9:53

Bus - VOLTAGE (KV/PU)
Branch - MW/MVAR
Equipment - MW/MVAR
100.0%RATE8
1.050OV 0.950UV
KV: <=30.000 <=69.000 <=138.000 <=230.000 <=345.000 >345.000

Figure __

NSX 199.8 MW
CBX 789.8 MW
ONI 1011.7 MW
ONS 700.3 MW

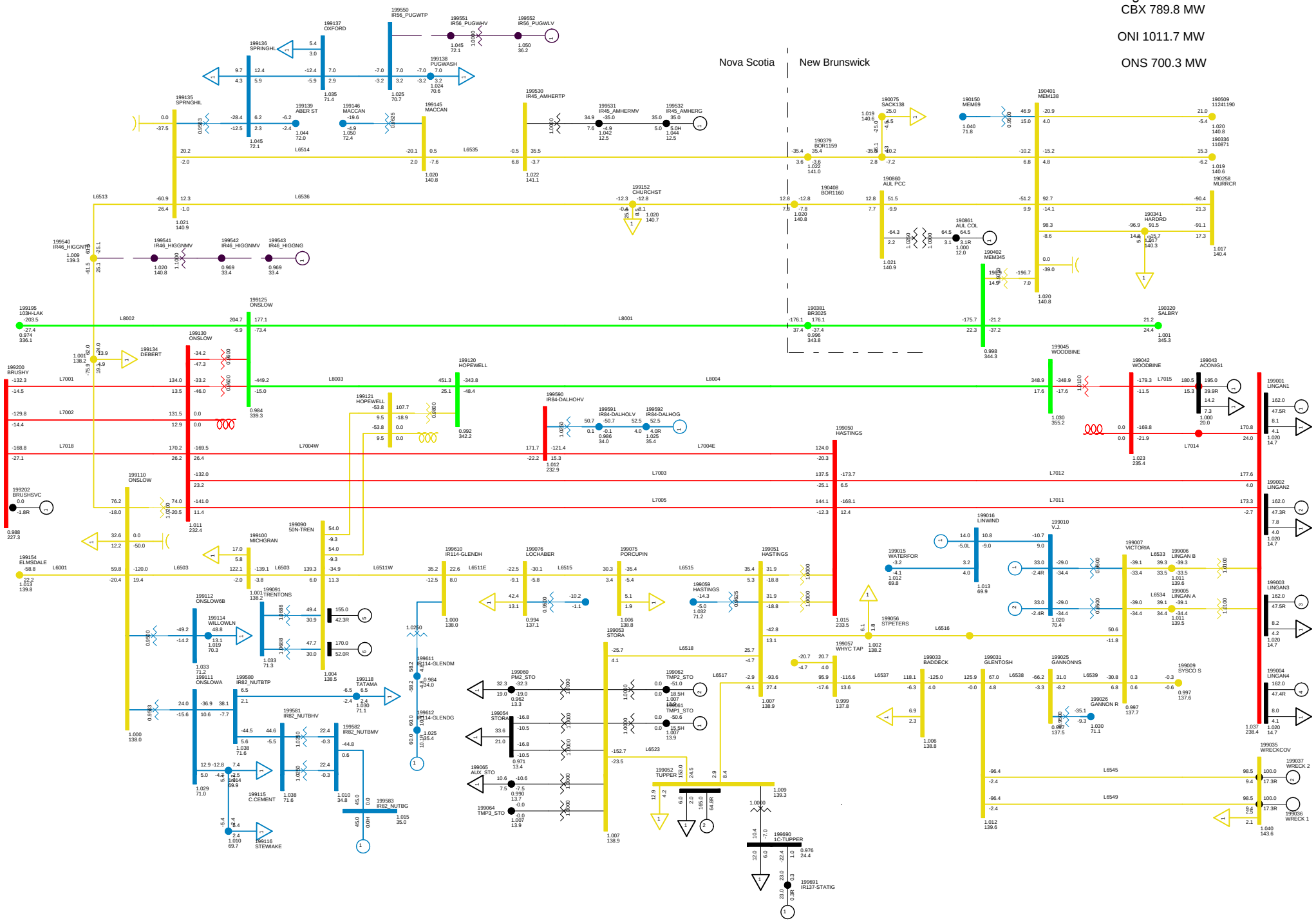

2013 WINTER PEAK WITH DSM - DELIVER RESERVE
NS-NB=200; NB-NE=500; CBX=790; ONI=1015 ONS=704
NORTHEASTERN NS WED, DEC 10 2008 9:53

Total Wind Gen: 290.1 MW
Gross Lingan 648.0 MW
Gross Pt Aconi 195.0 MW
Gross Tupper 165.0 MW
Gross Trenton 325.0 MW
Gross Tuft's Cove 455.2 MW
Gross Wreck Cove 200.0 MW
Gross Gas Turbine 210.0 MW
Gross Small Hydro 182.4 MW
Total Stora Load 178.4 MW
Total BMPC Load 108.5 MW

Bus - VOLTAGE (KV/PU)
Branch - MW/MVAR
Equipment - MW/MVAR
110.0%RATEB
1.0500V 0.9500V
KV: <=25.000 <=69.000 <=138.000 <=230.000 <=345.000 >345.000

Figure ___

NSX 16.6 MW

CBX 624.1 MW

ONI 830.7 MW

ONS 702.5 MW

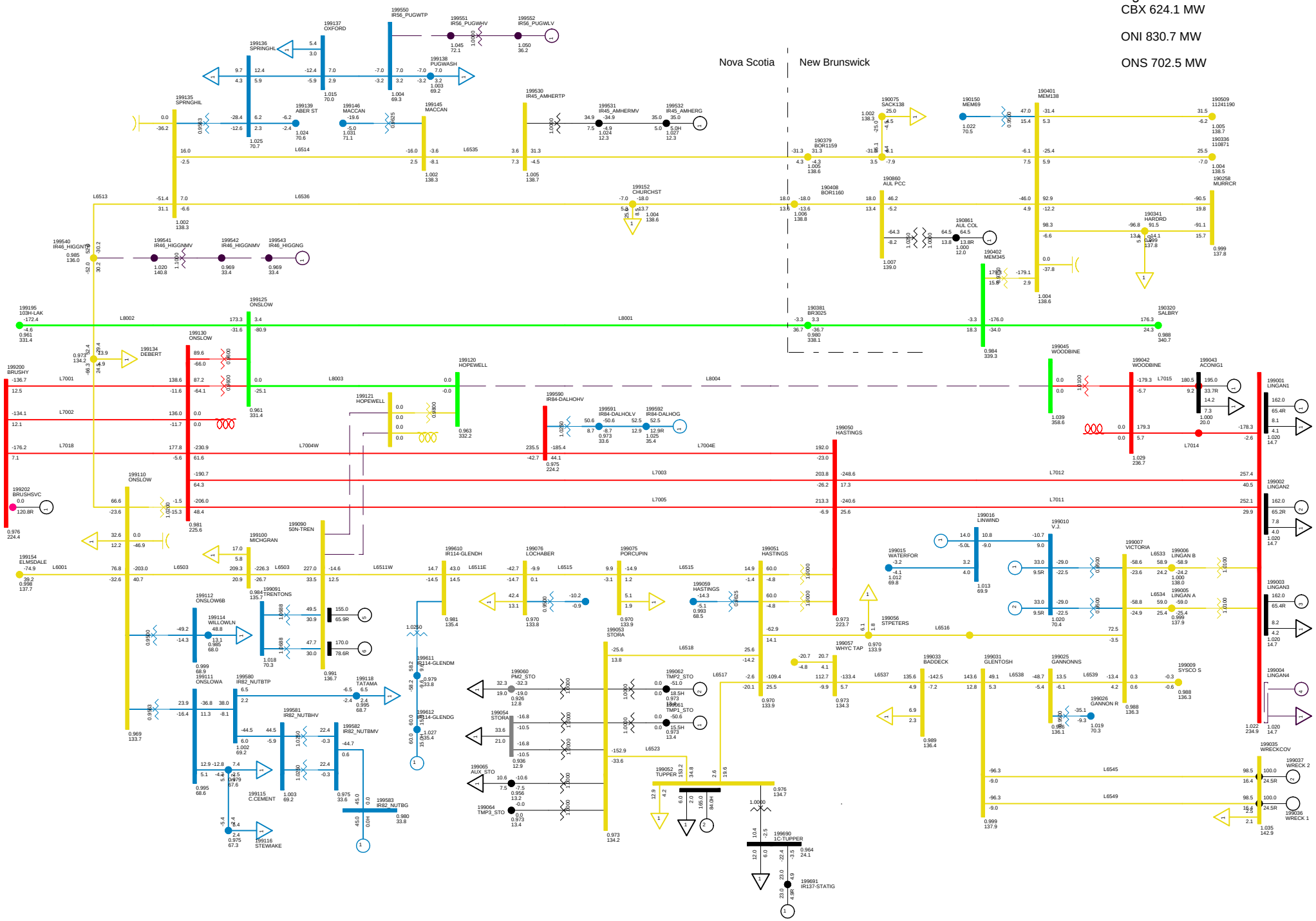

2013 WINTER PEAK NS EXPORT 200
C50 1P FAULT ON L6507, BBU 79N-606
NORTHEASTERN NS WED, DEC 10 2008 9:54

Total Wind Gen: 290.1 MW | Gross Tupper 165.0 MW | Gross Wreck Cove 200.0 MW | Net Stora Load 178.4 MW
Gross Lingan 486.0 MW | Gross Trenton 325.0 MW | Gross Gas Turbine 210.0 MW | Total BMPC Load 108.5 MW
Gross Pt Aconi 195.0 MW | Gross Tuft's Cove 455.2 MW | Gross Small Hydro 182.4 MW

Bus - VOLTAGE (KV/PU)
Branch - MW/MVAR
Equipment - MW/MVAR
110.0%RATEB
1.050UV 0.950UV
KV: <=25.000 <=69.000 <=138.000 <=230.000 <=345.000 >345.000

Figure ___

NSX 256.6 MW
CBX 789.6 MW
ONI 1009.8 MW
ONS 701.0 MW

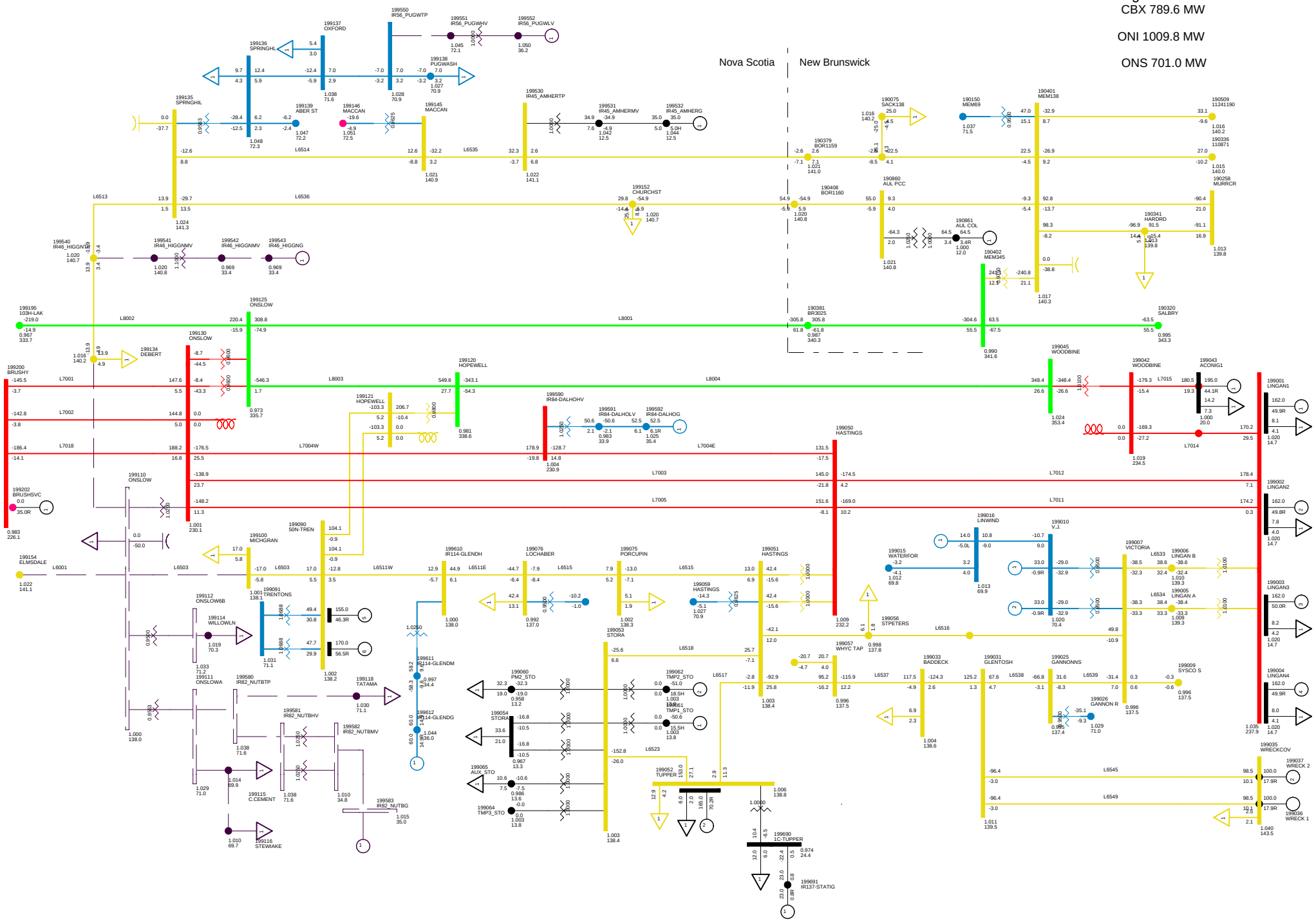

2013 WINTER PEAK NS EXPORT 200
C51 1P FAULT ON 1N BUS 61
NORTHEASTERN NS WED, DEC 10 2008 9:54

Total Wind Gen: 245.1 MW | Gross Tupper 165.0 MW | Gross Wreck Cove 200.0 MW | Net Stora Load 178.4 MW
Gross Lingan 648.0 MW | Gross Trenton 325.0 MW | Gross Gas Turbine 210.0 MW | Total BMPC Load 108.5 MW
Gross Pt Aconi 195.0 MW | Gross Tuft's Cove 455.2 MW | Gross Small Hydro 182.4 MW

Bus - VOLTAGE (KV/PU)
Branch - MW/MVAR
Equipment - MW/MVAR
110.0%RATEB
1.050OV 0.950UV
KV: <=25.000 <=69.000 <=138.000 <=230.000 <=345.000 >345.000

Figure ___

NSX 247.6 MW
CBX 841.2 MW
ONI 1059.9 MW
ONS 700.4 MW

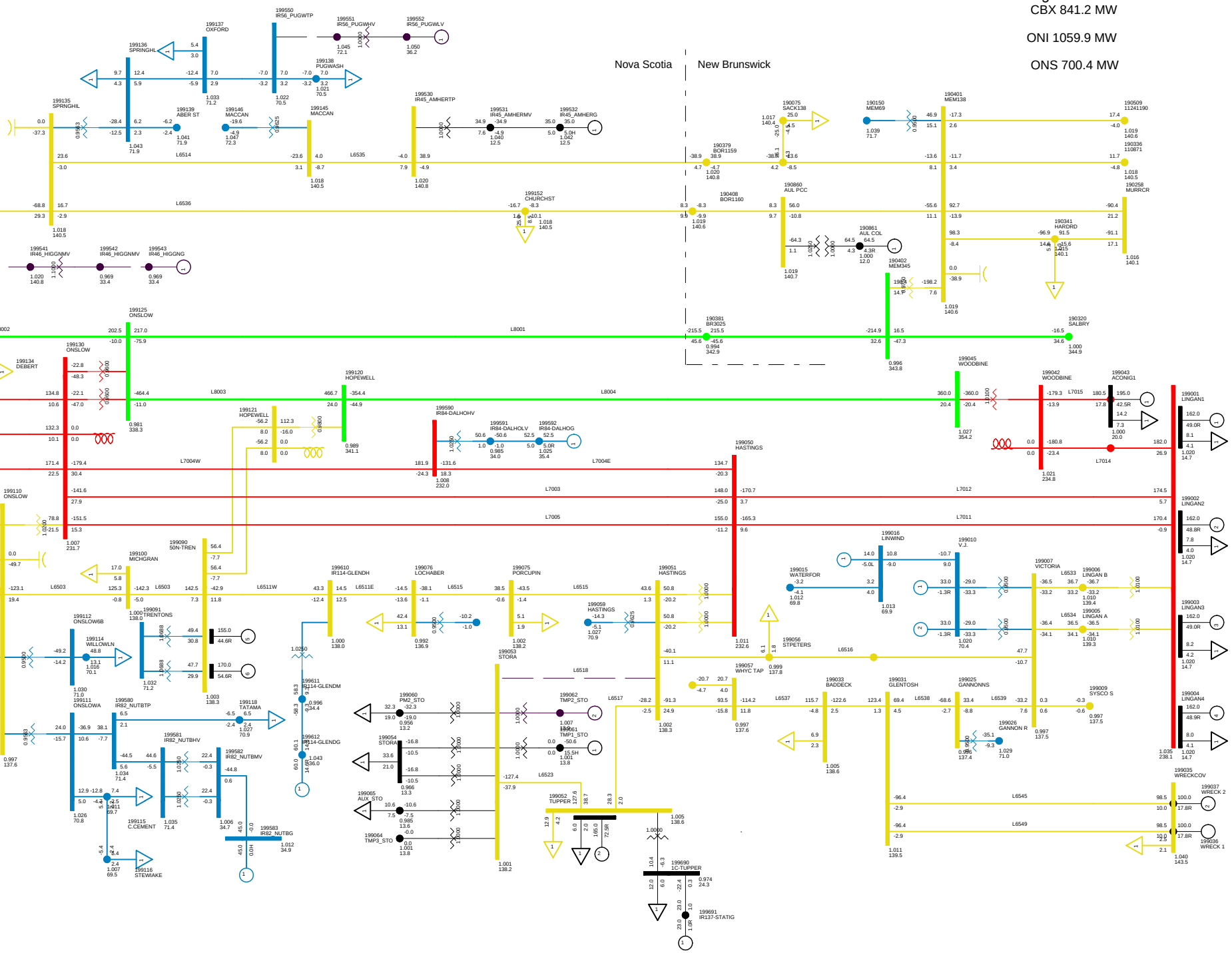

2013 WINTER PEAK NS EXPORT 200
C52 BBU 47C-601
NORTHEASTERN NS WED, DEC 10 2008 9:54

Total Wind Gen: 290.1 MW | Gross Tupper 165.0 MW | Gross Wreck Cove 200.0 MW | Net Stora Load 127.4 MW
Gross Lingan 648.0 MW | Gross Trenton 325.0 MW | Gross Gas Turbine 210.0 MW | Total BMPC Load 108.5 MW
Gross Pt Aconi 195.0 MW | Gross Tuft's Cove 455.2 MW | Gross Small Hydro 182.4 MW

Bus - VOLTAGE (KV/PU)
Branch - MW/MVAR
Equipment - MW/MVAR
110.0%RATEB
1.050OV 0.950UV
KV: <=25.000 <=69.000 <=138.000 <=230.000 <=345.000 >345.000

Figure ___

NSX 247.3 MW
CBX 840.8 MW
ONI 1059.6 MW
ONS 700.4 MW

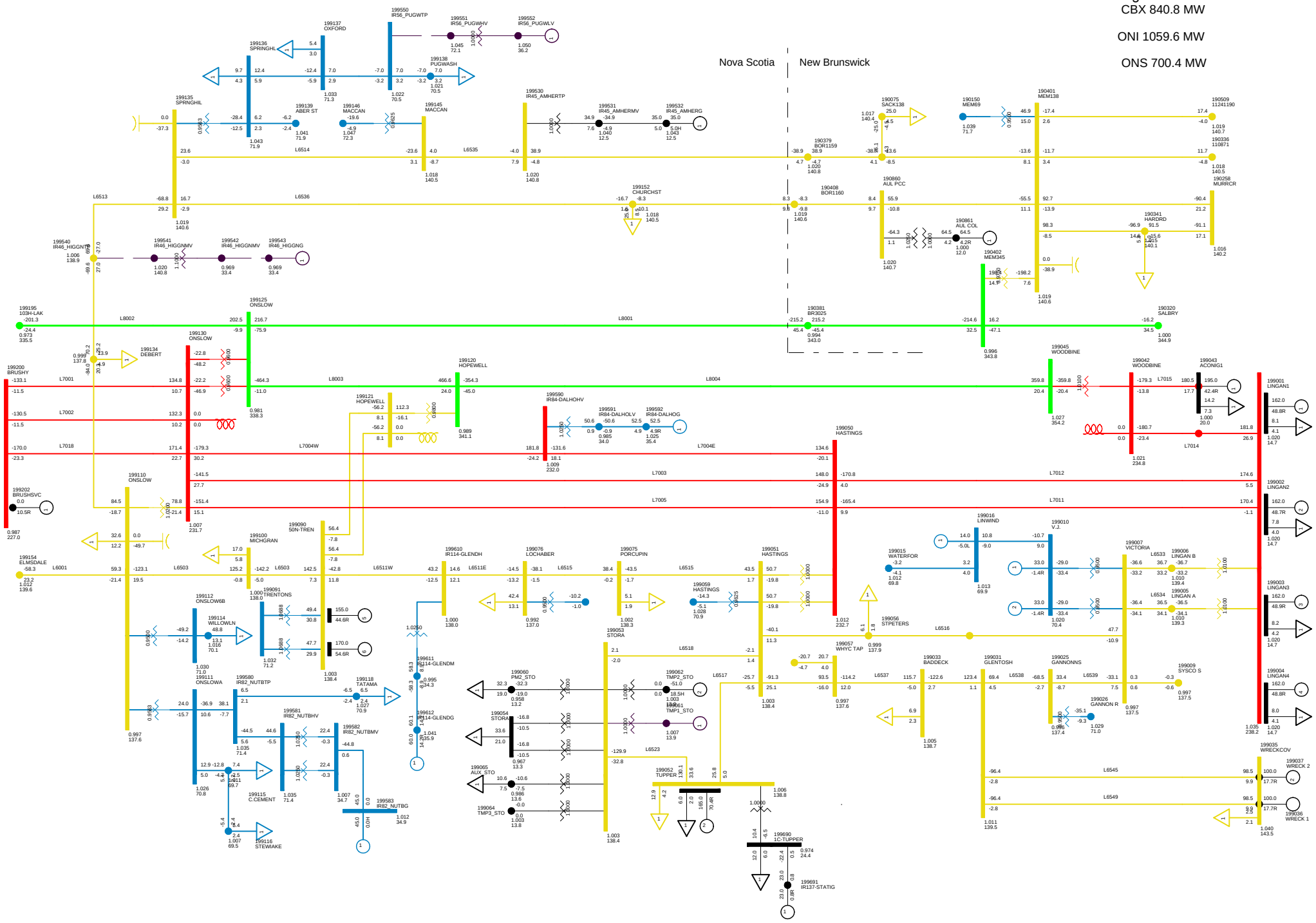

2013 WINTER PEAK NS EXPORT 200
C53 BREAKR 47C-602 FAULT
NORTHEASTERN NS WED, DEC 10 2008 9:54

Total Wind Gen: 290.1 MW | Gross Tupper 165.0 MW | Gross Wreck Cove 200.0 MW | Total Stora Load 127.8 MW
Gross Lingan 648.0 MW | Gross Trenton 325.0 MW | Gross Gas Turbine 210.0 MW | Total BMPC Load 108.5 MW
Gross Pt Aconi 195.0 MW | Gross Tuft's Cove 455.2 MW | Gross Small Hydro 182.4 MW

Bus - VOLTAGE (KV/PU)
Branch - MW/MVAR
Equipment - MW/MVAR
110.0%RATEB
1.050UV 0.950UV
KV: <=25.000 <=69.000 <=138.000 <=230.000 <=345.000 >345.000

Figure ___

NSX 199.8 MW
CBX 789.8 MW
ONI 1011.7 MW
ONS 700.3 MW

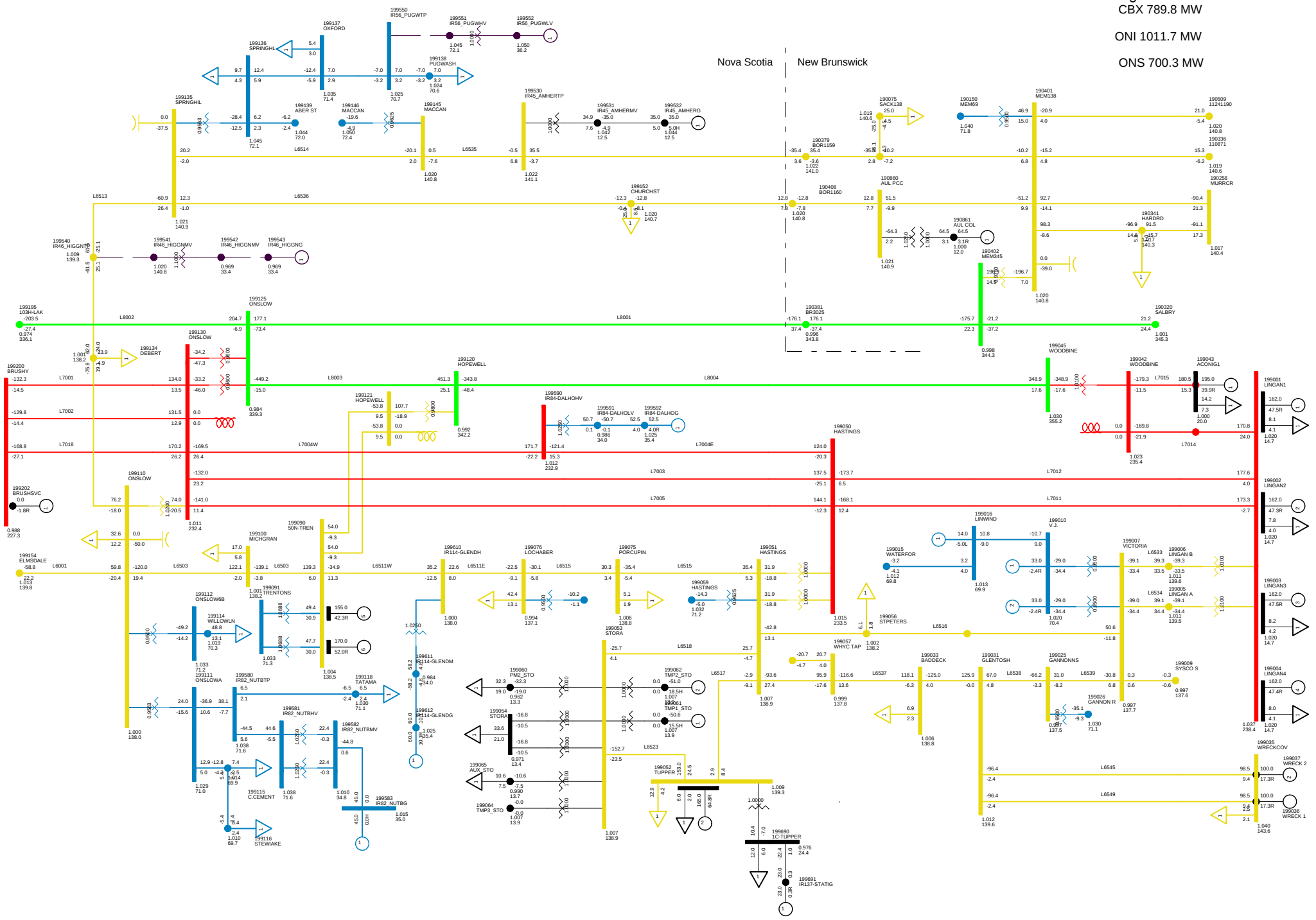

2013 WINTER PEAK WITH DSM - DELIVER RESERVE
NS-NB=200; NB-NE=500; CBX=790; ONI=1015 ONS=704
NORTHEASTERN NS WED, DEC 10 2008 9:54

Total Wind Gen: 290.1 MW
Gross Lingan 648.0 MW
Gross Pt Aconi 195.0 MW
Gross Tupper 165.0 MW
Gross Trenton 325.0 MW
Gross Tuft's Cove 455.2 MW
Gross Wreck Cove 200.0 MW
Gross Gas Turbine 210.0 MW
Gross Small Hydro 182.4 MW
Total Stora Load 178.4 MW
Total BMPC Load 108.5 MW

Bus - VOLTAGE (KV/PU)
Branch - MW/MVAR
Equipment - MW/MVAR
110.0%RATEB
1.0500V 0.950UV
KV: <=25.000 <=69.000 <=138.000 <=230.000 <=345.000 >345.000

Figure ___

NSX 42.1 MW
CBX 627.0 MW
ONI 853.1 MW
ONS 700.3 MW

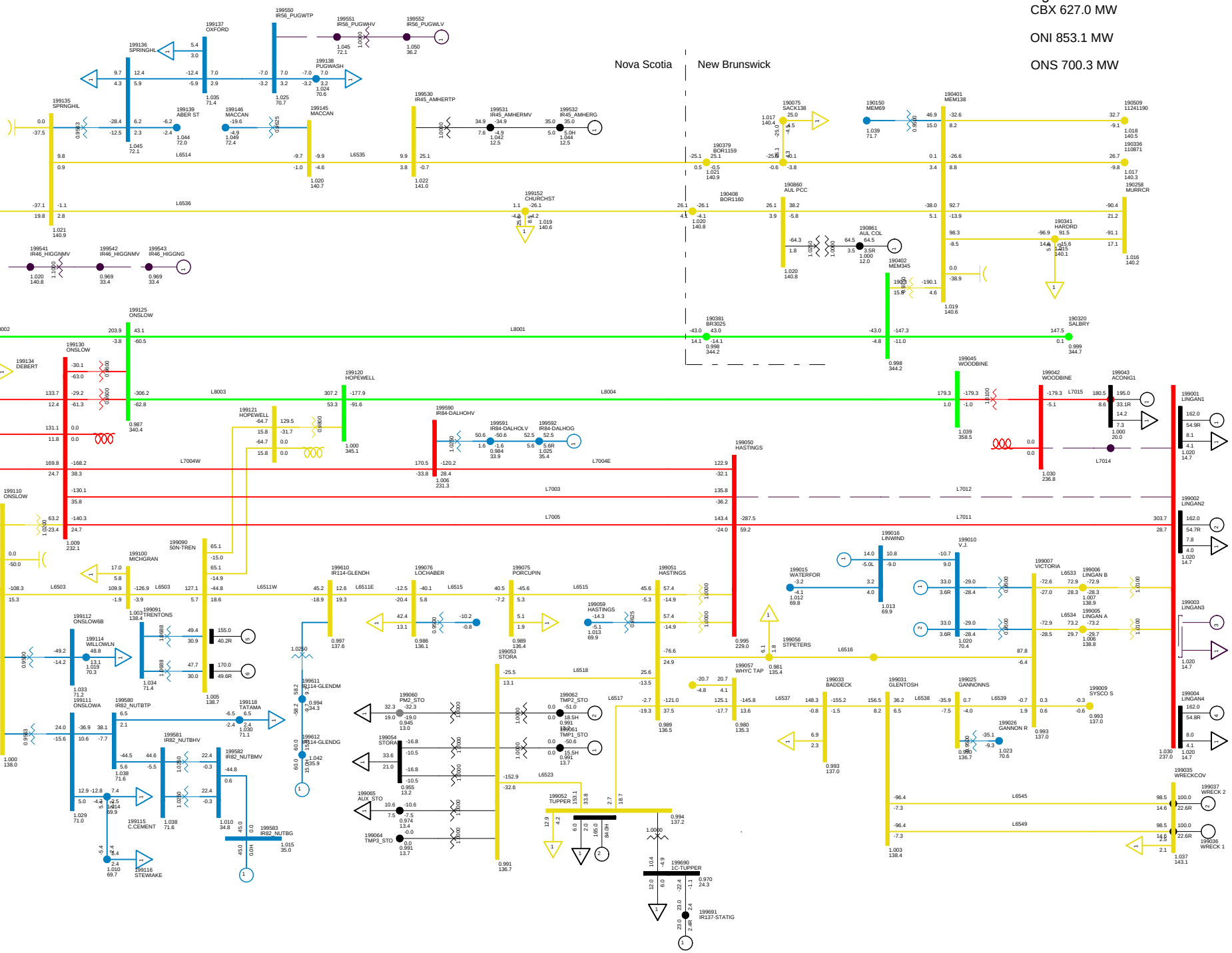

2013 WINTER PEAK NS EXPORT 200
C54S BBU 88S-723 WITH SPS
NORTHEASTERN NS WED, DEC 10 2008 9:54

Total Wind Gen: 290.1 MW
Gross Lingan 486.0 MW
Gross Pt Aconi 195.0 MW
Gross Tupper 165.0 MW
Gross Trenton 325.0 MW
Gross Tuft's Cove 455.2 MW
Gross Wreck Cove 200.0 MW
Gross Gas Turbine 210.0 MW
Gross Small Hydro 182.4 MW
Net Stora Load 178.4 MW
Total BMPC Load 108.5 MW

Bus - VOLTAGE (KV/PU)
Branch - MW/MVAR
Equipment - MW/MVAR
110.0%RATEB
1.050UV 0.950UV
KV: <=25.000 <=69.000 <=138.000 <=230.000 <=345.000 >345.000

Figure ___

NSX 189.4 MW
CBX 791.0 MW
ONI 1005.2 MW
ONS 704.2 MW

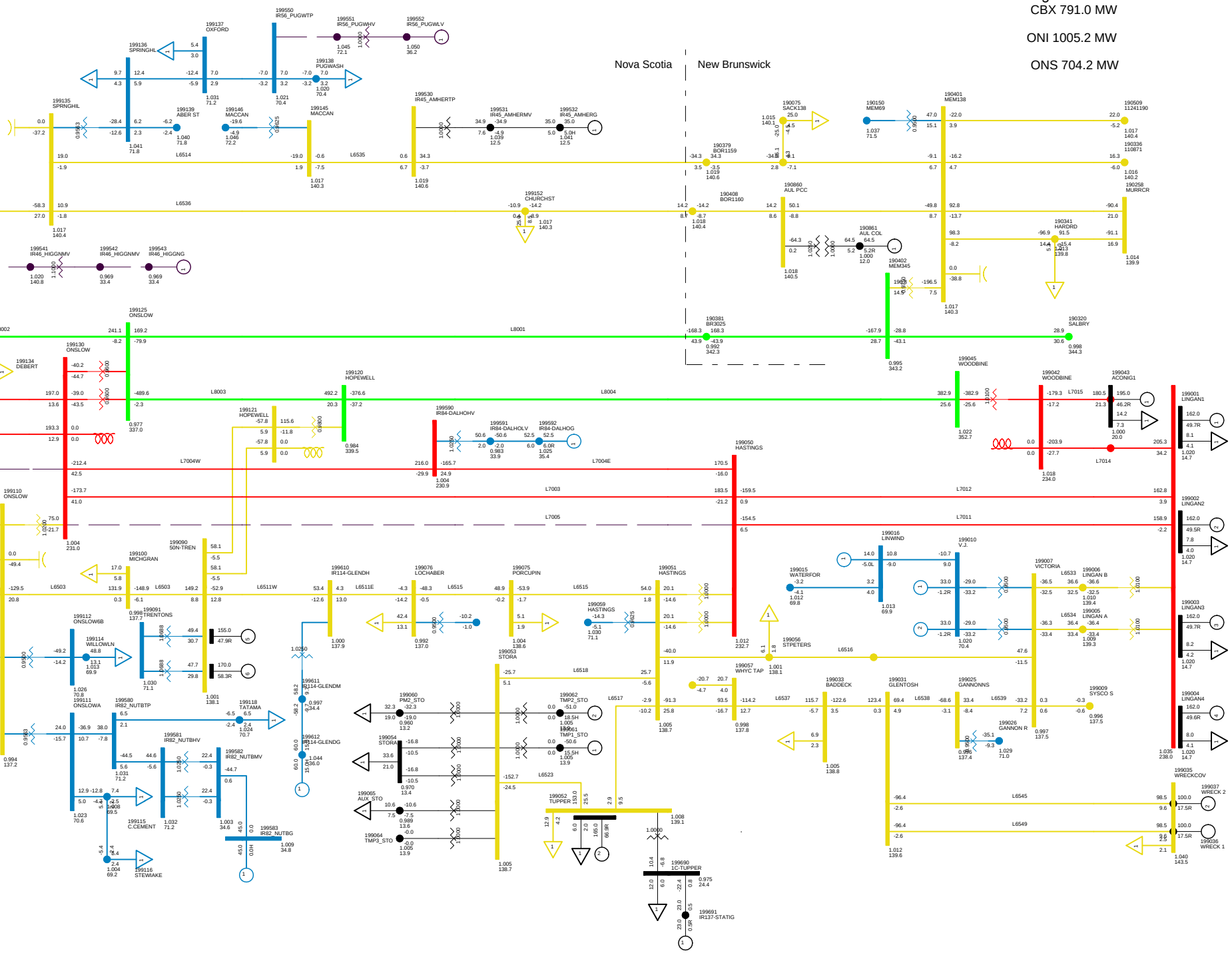

2013 WINTER PEAK NS EXPORT 200
C55 BBU 67N-712
NORTHEASTERN NS WED, DEC 10 2008 9:54

Total Wind Gen: 290.1 MW | Gross Tupper 165.0 MW | Gross Wreck Cove 200.0 MW | Net Stora Load 178.4 MW
Gross Lingan 648.0 MW | Gross Trenton 325.0 MW | Gross Gas Turbine 210.0 MW | Total BMPC Load 108.5 MW
Gross Pt Aconi 195.0 MW | Gross Tuft's Cove 455.2 MW | Gross Small Hydro 182.4 MW

Bus - VOLTAGE (KV/PU)
Branch - MW/MVAR
Equipment - MW/MVAR
110.0%RATEB
1.050OV 0.950UV
KV: <=25.000 <=69.000 <=138.000 <=230.000 <=345.000 >345.000

Figure ___

NSX -102.8 MW

CBX 491.2 MW

ONI 709.9 MW

ONS 701.8 MW

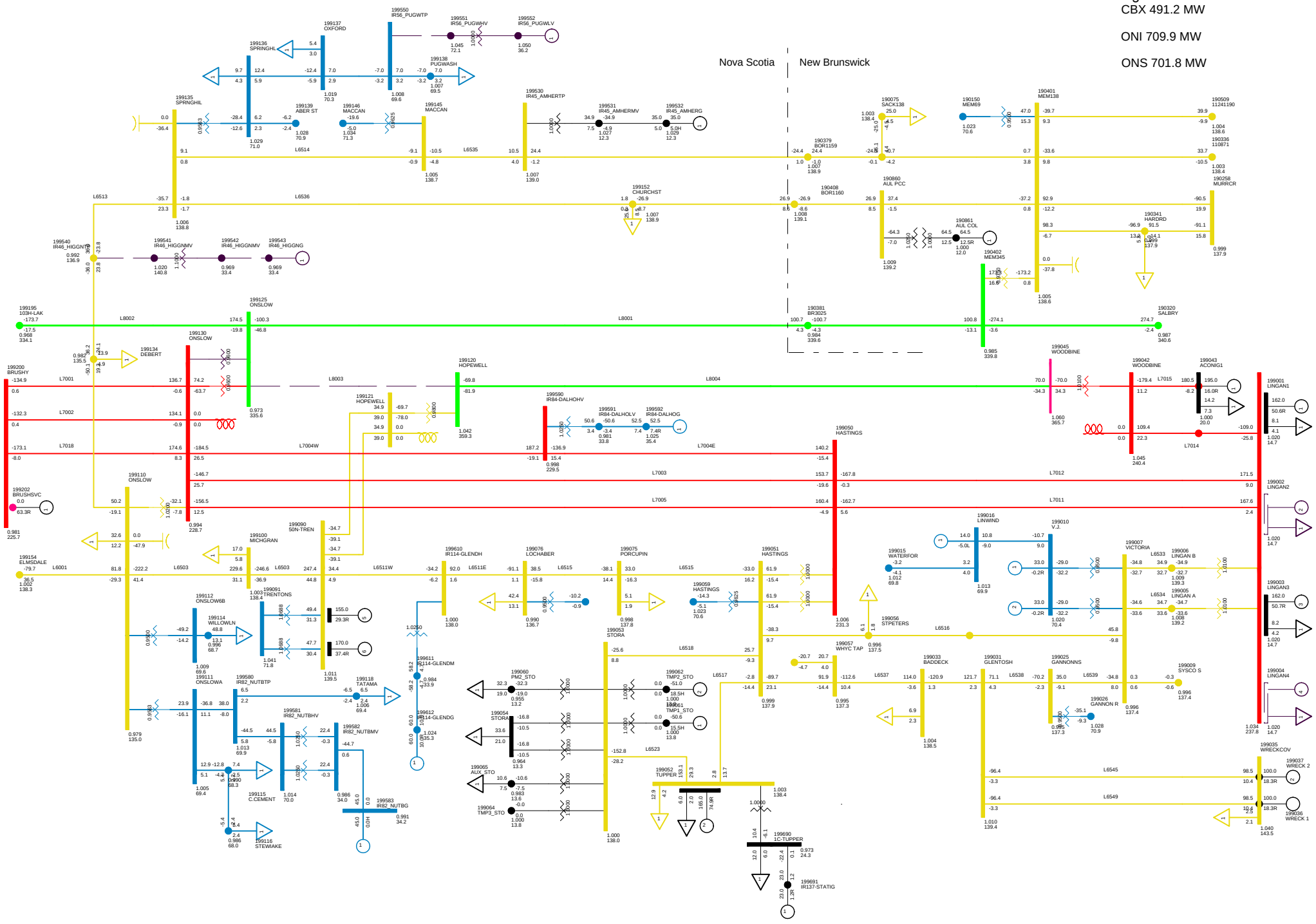

2013 WINTER PEAK NS EXPORT 200
C56SS BBU 67N-811 L8003 + T82 2 UNIT SPS
NORTHEASTERN NS WED, DEC 10 2008 9:55

Total Wind Gen: 290.1 MW
Gross Lingan 324.0 MW
Gross Pt Aconi 195.0 MW
Gross Tupper 165.0 MW
Gross Trenton 325.0 MW
Gross Tuft's Cove 455.2 MW
Gross Wreck Cove 200.0 MW
Gross Gas Turbine 210.0 MW
Gross Small Hydro 182.4 MW
Net Stora Load 178.4 MW
Total BMPC Load 108.5 MW

Bus - VOLTAGE (KV/PU)
Branch - MW/MVAR
Equipment - MW/MVAR
110.0%RATEB
1.050OV 0.950UV
KV: <=25.000 <=69.000 <=138.000 <=230.000 <=345.000 >345.000

Figure ___

NSX -110.2 MW

CBX 491.2 MW

ONI 709.8 MW

ONS 709.5 MW

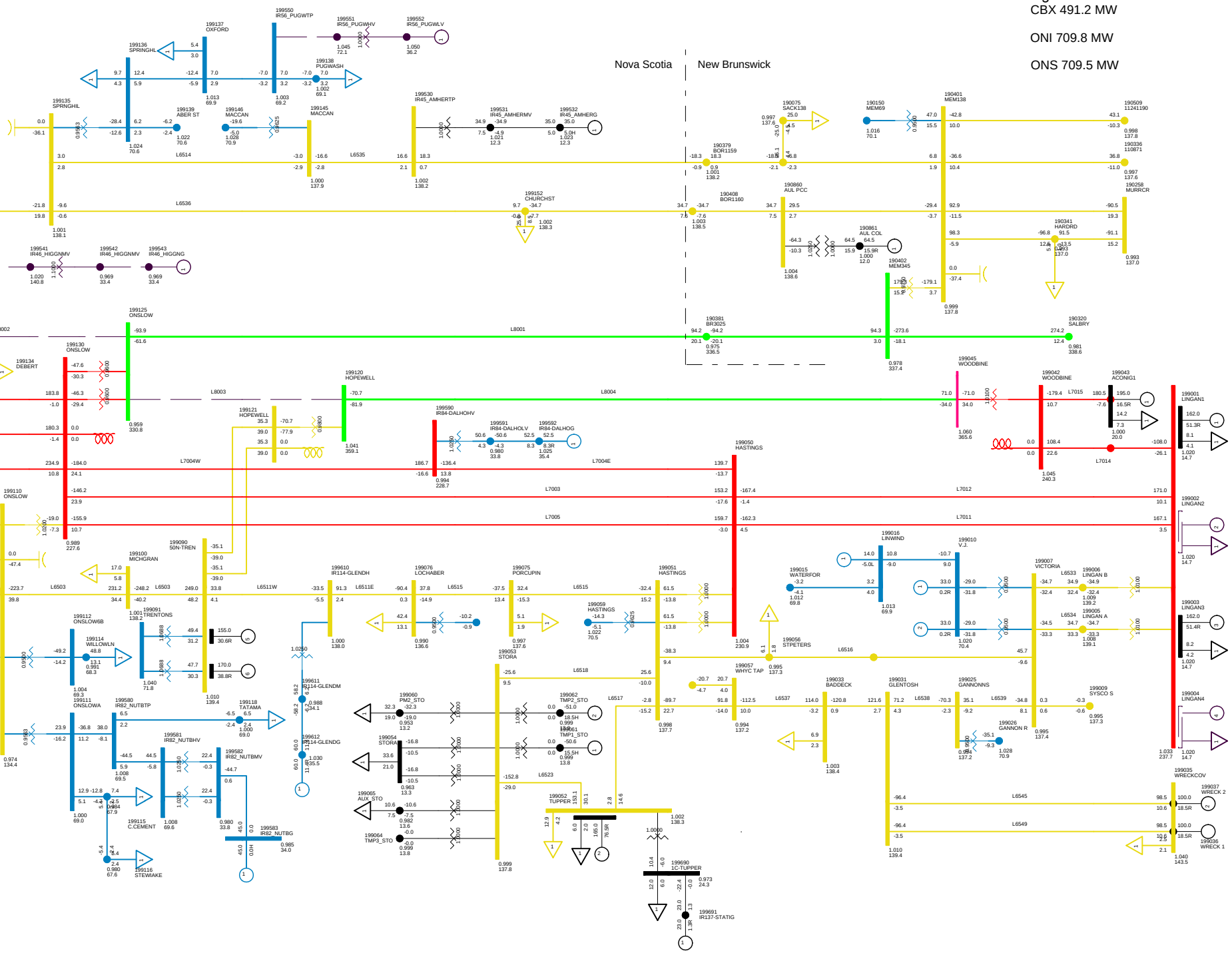

2013 WINTER PEAK NS EXPORT 200
C57SS BBU 67N-812 2-UNIT SPS
NORTHEASTERN NS WED, DEC 10 2008 9:56

Total Wind Gen: 290.1 MW | Gross Tupper 165.0 MW | Gross Wreck Cove 200.0 MW | Net Stora Load 178.4 MW
Gross Lingan 324.0 MW | Gross Trenton 325.0 MW | Gross Gas Turbine 210.0 MW | Total BMPC Load 108.5 MW
Gross Pt Aconi 195.0 MW | Gross Tuft's Cove 455.2 MW | Gross Small Hydro 182.4 MW

Bus - VOLTAGE (KV/PU)
Branch - MW/MVAR
Equipment - MW/MVAR
110.0%RATEB
1.050OV 0.950UV
KV: <=25.000 <=69.000 <=138.000 <=230.000 <=345.000 >345.000

Figure ___

NSX -106.4 MW

CBX 486.0 MW

ONI 705.9 MW

ONS 701.7 MW

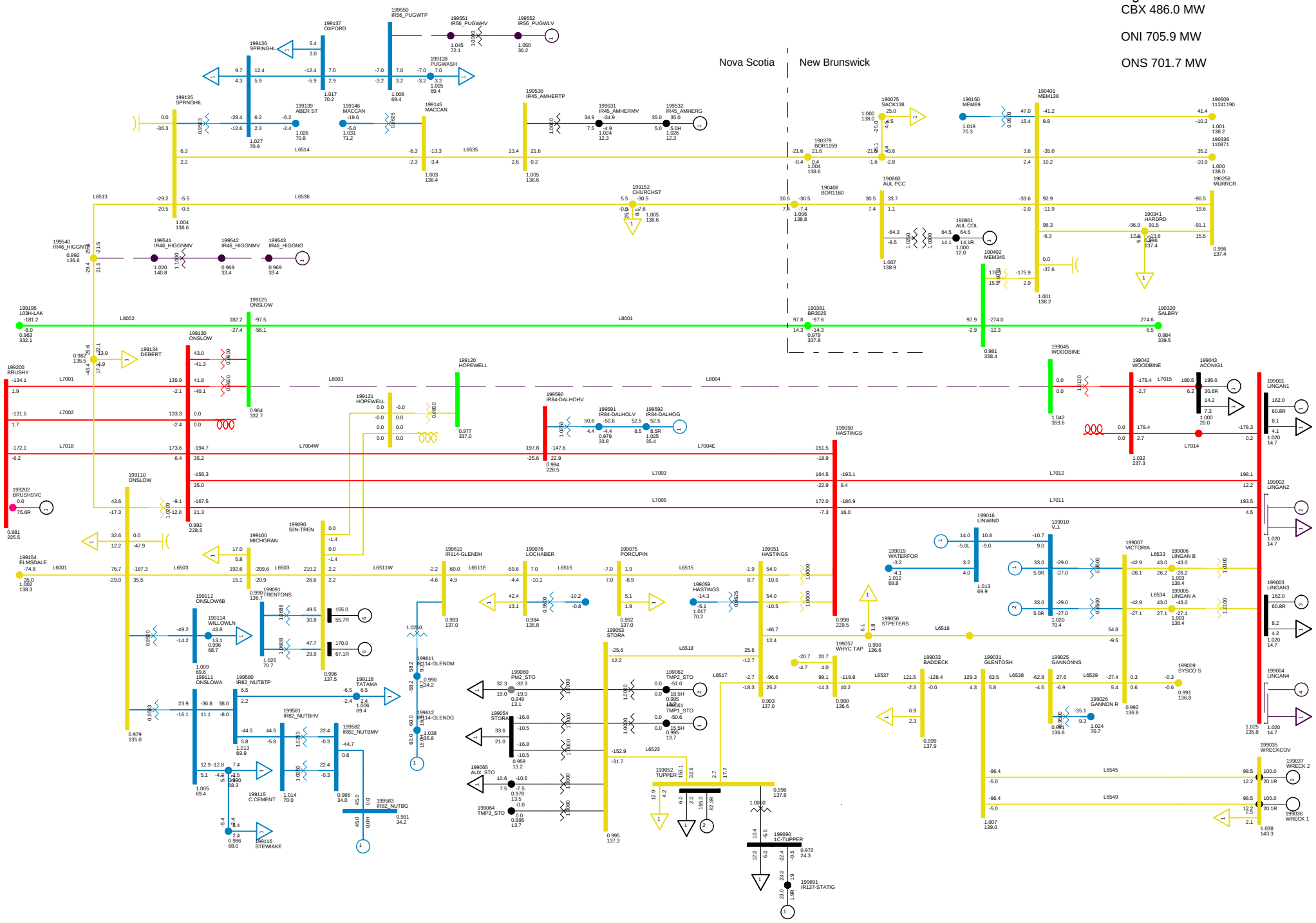

2013 WINTER PEAK NS EXPORT 200
C58SS BBU 79N-810 2-UNIT SPS
NORTHEASTERN NS WED, DEC 10 2008 9:56

Total Wind Gen: 290.1 MW | Gross Tupper 165.0 MW | Gross Wreck Cove 200.0 MW | Net Stora Load 178.4 MW
Gross Lingan 324.0 MW | Gross Trenton 325.0 MW | Gross Gas Turbine 210.0 MW | Total BMPC Load 108.5 MW
Gross Pt Aconi 195.0 MW | Gross Tuft's Cove 455.2 MW | Gross Small Hydro 182.4 MW

Bus - VOLTAGE (KV/PU)
Branch - MW/MVAR
Equipment - MW/MVAR
110.0%RATEB
1.050OV 0.950UV
KV: <=25.000 <=69.000 <=138.000 <=230.000 <=345.000 >345.000

Figure ___

NSX -77.5 MW

CBX 498.6 MW

ONI 732.9 MW

ONS 700.1 MW

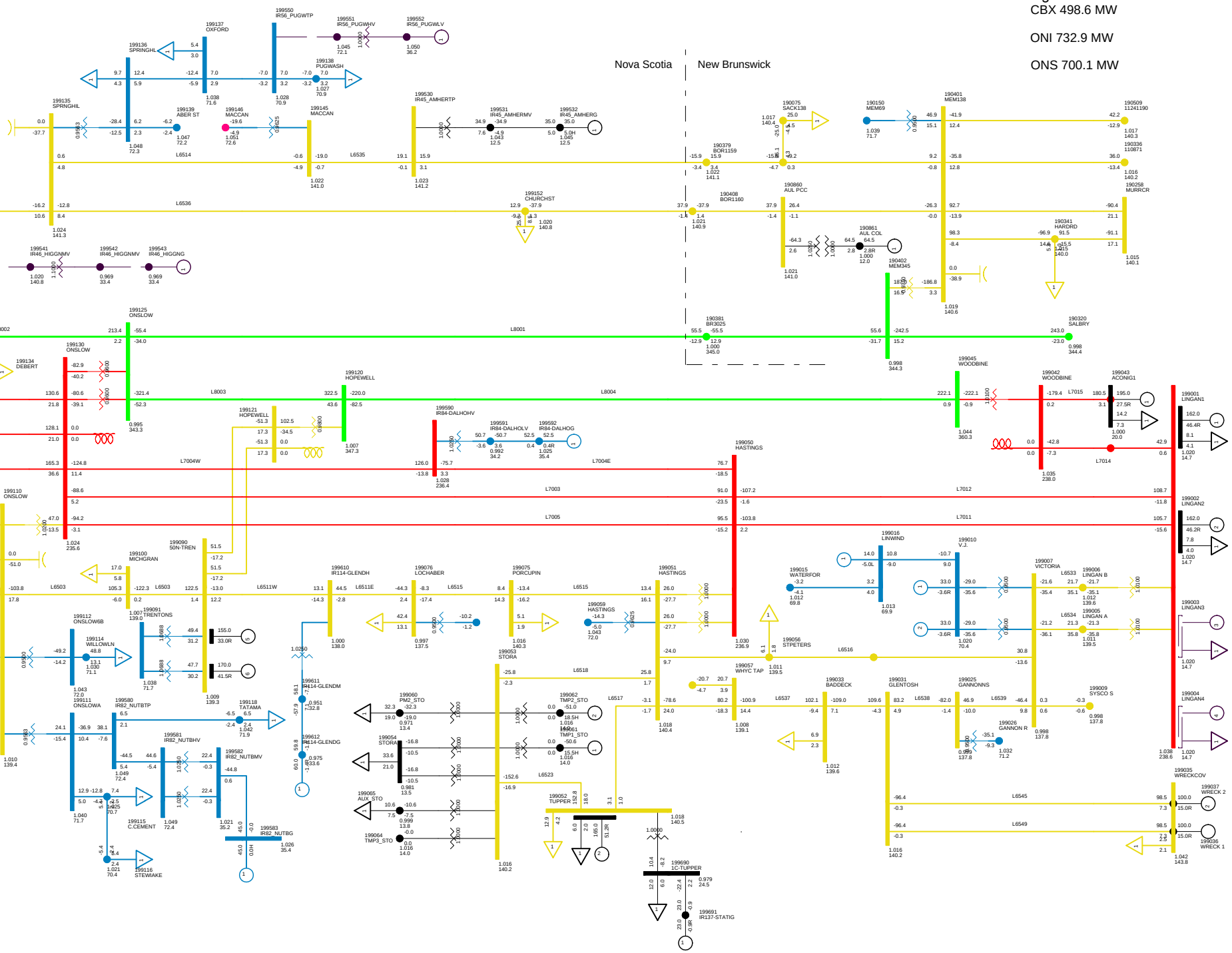

2013 WINTER PEAK NS EXPORT 200
C59 BBU 88S-721 TRIP LINGAN 3 AND 4
NORTHEASTERN NS WED, DEC 10 2008 9:56

Total Wind Gen: 290.1 MW | Gross Tupper 165.0 MW | Gross Wreck Cove 200.0 MW | Net Stora Load 178.4 MW
Gross Lingan 324.0 MW | Gross Trenton 325.0 MW | Gross Gas Turbine 210.0 MW | Total BMPC Load 108.5 MW
Gross Pt Aconi 195.0 MW | Gross Tuft's Cove 455.2 MW | Gross Small Hydro 182.4 MW

Bus - VOLTAGE (KV/PU)
Branch - MW/MVAR
Equipment - MW/MVAR
110.0%RATEB
1.050OV 0.950UV
KV: <=25.000 <=69.000 <=138.000 <=230.000 <=345.000 >345.000

Figure ___

NSX 195.3 MW

CBX 792.0 MW

ONI 1007.4 MW

ONS 700.5 MW

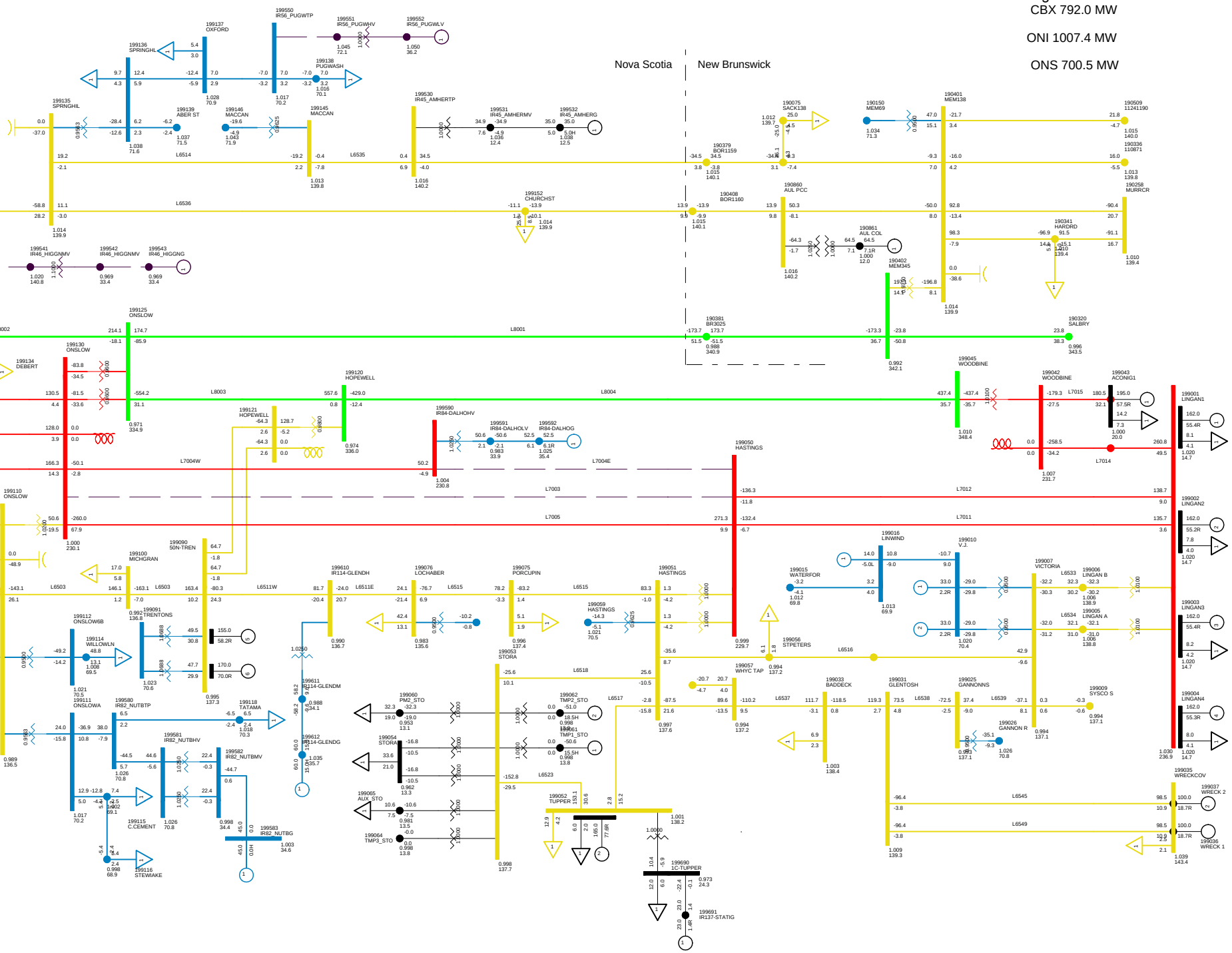

2013 WINTER PEAK NS EXPORT 200
C60 DCT ON L7003+L7004
NORTHEASTERN NS WED, DEC 10 2008 9:57

Total Wind Gen: 290.1 MW
Gross Lingan 648.0 MW
Gross Pt Aconi 195.0 MW
Gross Tupper 165.0 MW
Gross Trenton 325.0 MW
Gross Tuft's Cove 455.2 MW
Gross Wreck Cove 200.0 MW
Gross Gas Turbine 210.0 MW
Gross Small Hydro 182.4 MW
Total Stora Load 178.4 MW
Total BMPC Load 108.5 MW

Bus - VOLTAGE (KV/PU)
Branch - MW/MVAR
Equipment - MW/MVAR
110.0%RATEB
1.050OV 0.950UV
KV: <=25.000 <=69.000 <=138.000 <=230.000 <=345.000 >345.000

Figure ___

CBX 485.9 MW

ONI 701.2 MW

ONS 701.0 MW

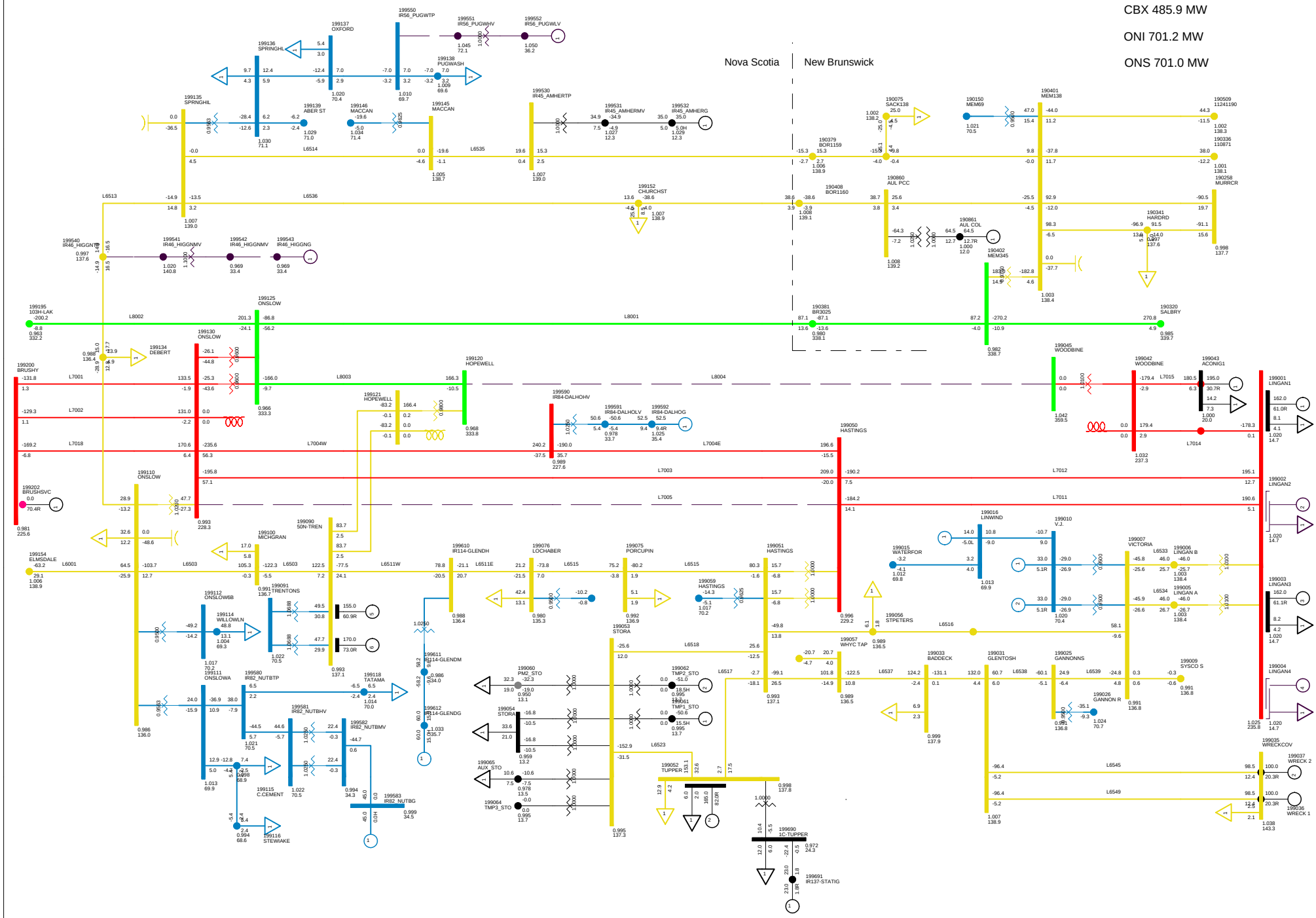

2013 WINTER PEAK NS EXPORT 200
C61SS DCT ON STRAIT CROSSING L8004-L7005 WITH 2-UNIT SPS
NORTHEASTERN NS WED, DEC 10 2008 9:57

Total Wind Gen: 290.1 MW
Gross Lingan 324.0 MW
Gross Pt Aconi 195.0 MW
Gross Tupper 165.0 MW
Gross Trenton 325.0 MW
Gross Tuft's Cove 455.2 MW
Gross Wreck Cove 200.0 MW
Gross Gas Turbine 210.0 MW
Gross Small Hydro 182.4 MW
Net Stora Load 178.4 MW
Total BMPC Load 108.5 MW

Bus - VOLTAGE (KV/PU)
Branch - MW/MVAR
Equipment - MW/MVAR
110.0%RATE1
1.050OV 0.950UV
KV: <=25.000 <=69.000 <=138.000 <=230.000 <=345.000 >345.000

Figure ___

NSX -77.5 MW

CBX 498.6 MW

ONI 732.9 MW

ONS 700.1 MW

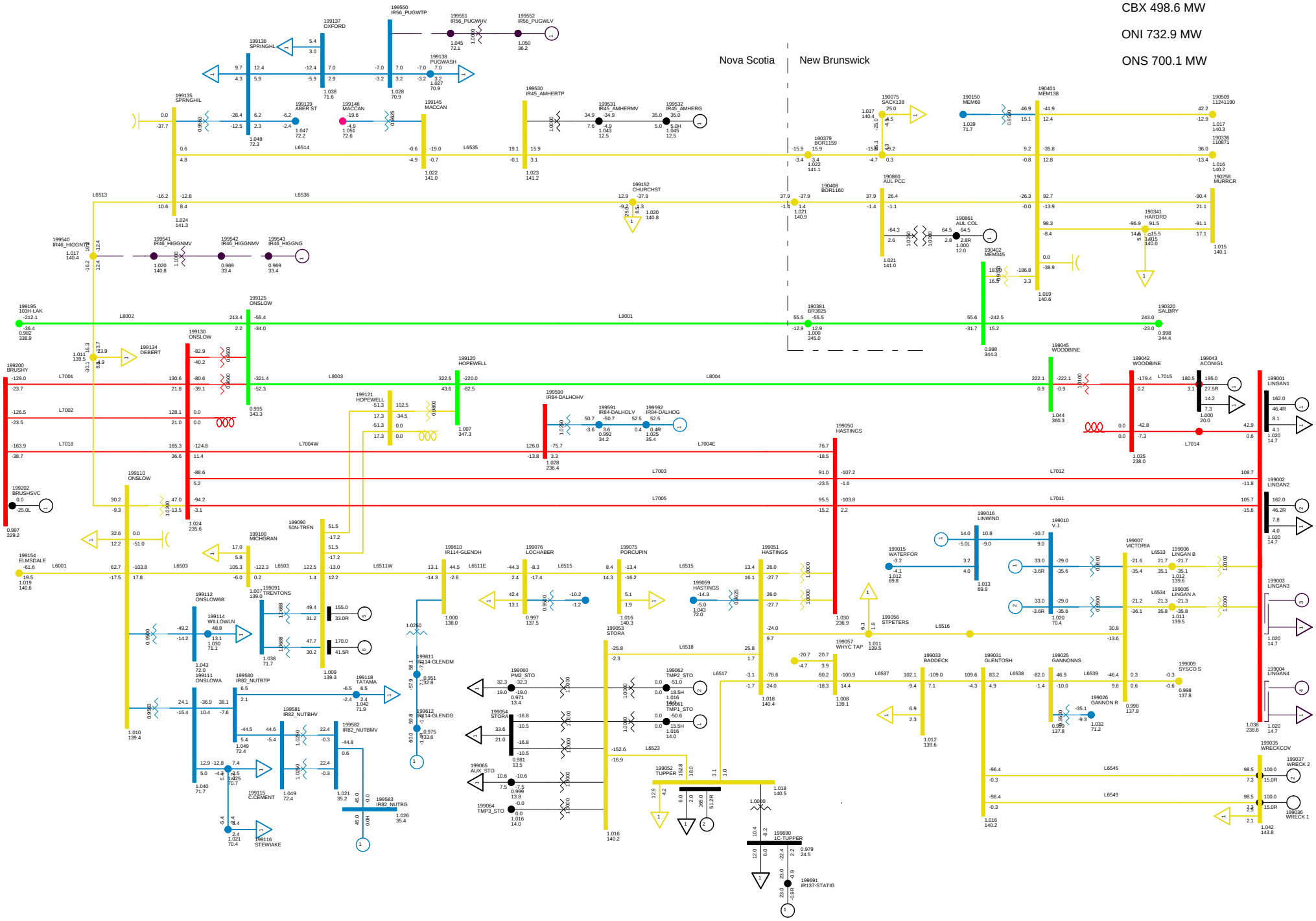

2013 WINTER PEAK NS EXPORT 200
C62 FAULT ON BREAKER 88S-721 TRIPS LINGAN 3 AND 4
NORTHEASTERN NS WED, DEC 10 2008 9:57

Total Wind Gen: 290.1 MW
Gross Lingan 324.0 MW
Gross Pt Aconi 195.0 MW
Gross Tupper 165.0 MW
Gross Trenton 325.0 MW
Gross Tuft's Cove 455.2 MW
Gross Wreck Cove 200.0 MW
Gross Gas Turbine 210.0 MW
Gross Small Hydro 182.4 MW
Net Stora Load 178.4 MW
Total BMPC Load 108.5 MW

Bus - VOLTAGE (KV/PU)
Branch - MW/MVAR
Equipment - MW/MVAR
110.0%RATEB
1.050OV 0.950UV
KV: <=25.000 <=69.000 <=138.000 <=230.000 <=345.000 >345.000

Figure ___

NSX 199.4 MW

CBX 789.7 MW

ONI 1011.3 MW

ONS 700.4 MW

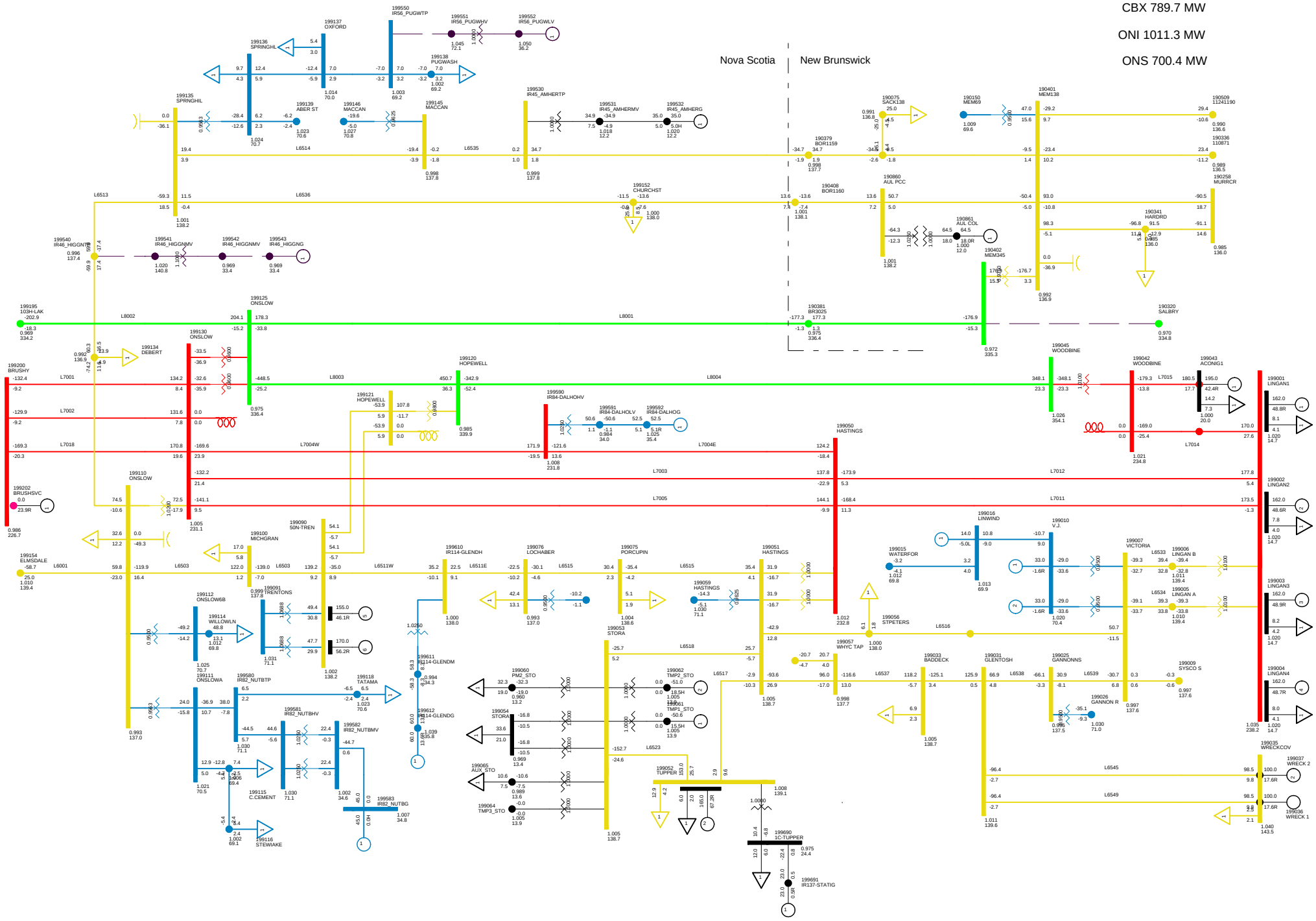

2013 WINTER PEAK NS EXPORT 200
C63 FAULT ON SALISBURY SA3-2 TRIPS L3006 AND L3017
NORTHEASTERN NS WED, DEC 10 2008 9:57

Total Wind Gen: 290.1 MW
Gross Lingan 648.0 MW
Gross Pt Aconi 195.0 MW
Gross Tupper 165.0 MW
Gross Trenton 325.0 MW
Gross Tuft's Cove 455.2 MW
Gross Wreck Cove 200.0 MW
Gross Gas Turbine 210.0 MW
Gross Small Hydro 182.4 MW
Net Stora Load 178.4 MW
Total BMPC Load 108.5 MW

Bus - VOLTAGE (KV/PU)
Branch - MW/MVAR
Equipment - MW/MVAR
110.0%RATEB
1.050OV 0.950UV
KV: <=25.000 <=69.000 <=138.000 <=230.000 <=345.000 >345.000

Figure ___

NSX 199.3 MW

CBX 789.7 MW

ONI 1011.4 MW

ONS 700.4 MW

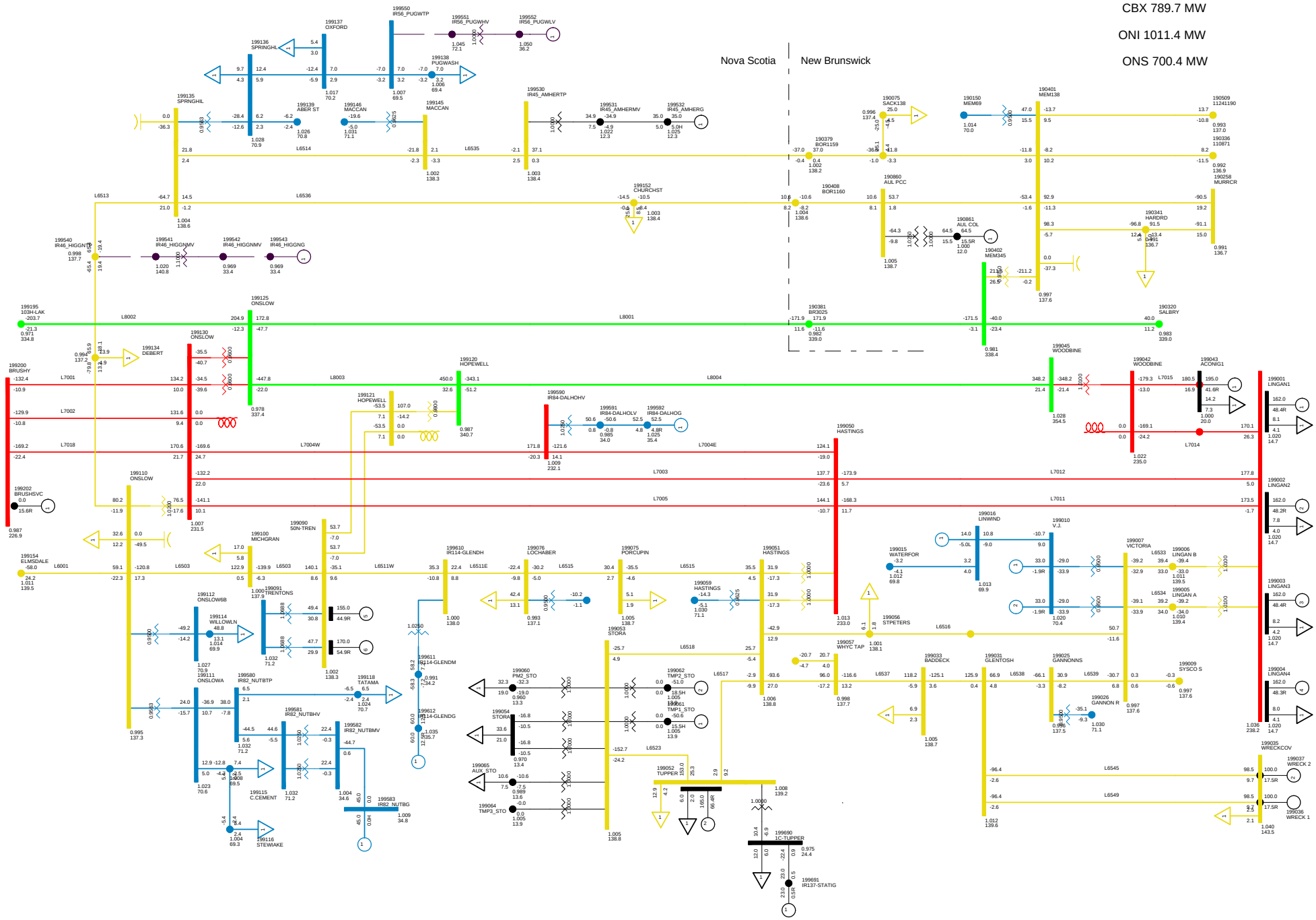

2013 WINTER PEAK NS EXPORT 200
C64 FAULT ON BREAKER SALISBURY BREAKER SA3-4 TRIPS L3013 AND
NORTHEASTERN NS WED, DEC 10 2008 9:57

Total Wind Gen: 290.1 MW
Gross Lingan 648.0 MW
Gross Pt Aconi 195.0 MW

Gross Tupper 165.0 MW
Gross Trenton 325.0 MW
Gross Tuft's Cove 455.2 MW

Gross Wreck Cove 200.0 MW
Gross Gas Turbine 210.0 MW
Gross Small Hydro 182.4 MW

Net Stora Load 178.4 MW
Total BMPC Load 108.5 MW

Bus - VOLTAGE (KV/PU)
Branch - MW/MVAR
Equipment - MW/MVAR
110.0%RATEB
1.050OV 0.950UV
KV: <=25.000 <=69.000 <=138.000 <=230.000 <=345.000 >345.000

Figure ___

NSX -199.9 MW
CBX 543.8 MW
ONI 773.3 MW
ONS 862.9 MW

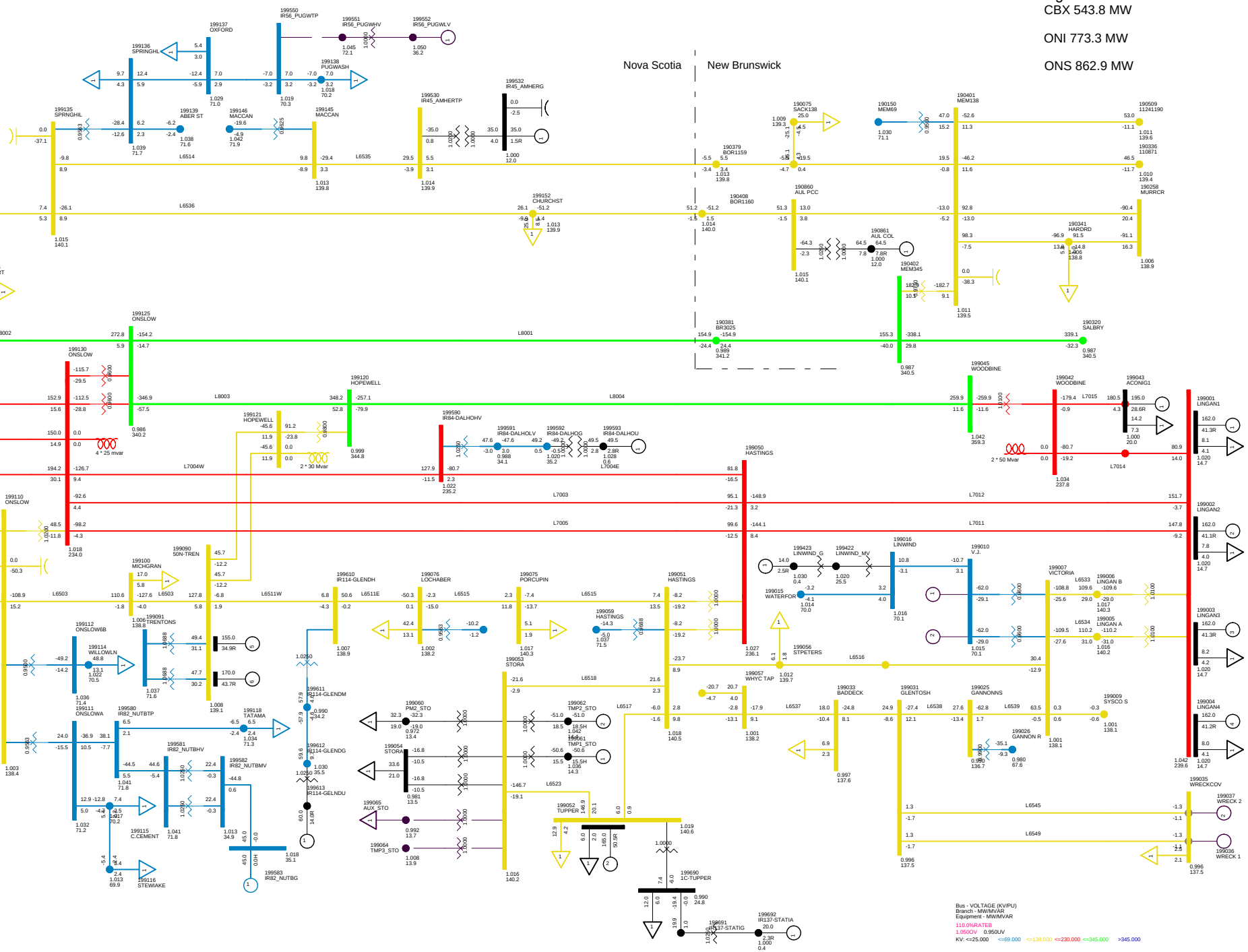

2013 WINTER PEAK STORA 167, NS LOAD 2371
NS-NB=-200; NB-NE=300; CBX=543; ONI=773 ONS=863
NORTHEASTERN NS WED, DEC 10 2008 11:21

Total Wind Gen: 140.6 MW
Gross Lingan 648.0 MW
Gross Pt Aconi 195.0 MW

Gross Tupper 165.0 MW
Gross Trenton 325.0 MW
Gross Tuft's Cove 378.1 MW

Gross Wreck Cove 0.0 MW
Gross Gas Turbine 24.0 MW
Gross Small Hydro 182.4 MW

Net Stora Load 168.3 MW
Total BMPC Load 75.5 MW

Figure ___

NSX -229.9 MW

CBX 524.8 MW

ONI 744.6 MW

ONS 864.2 MW

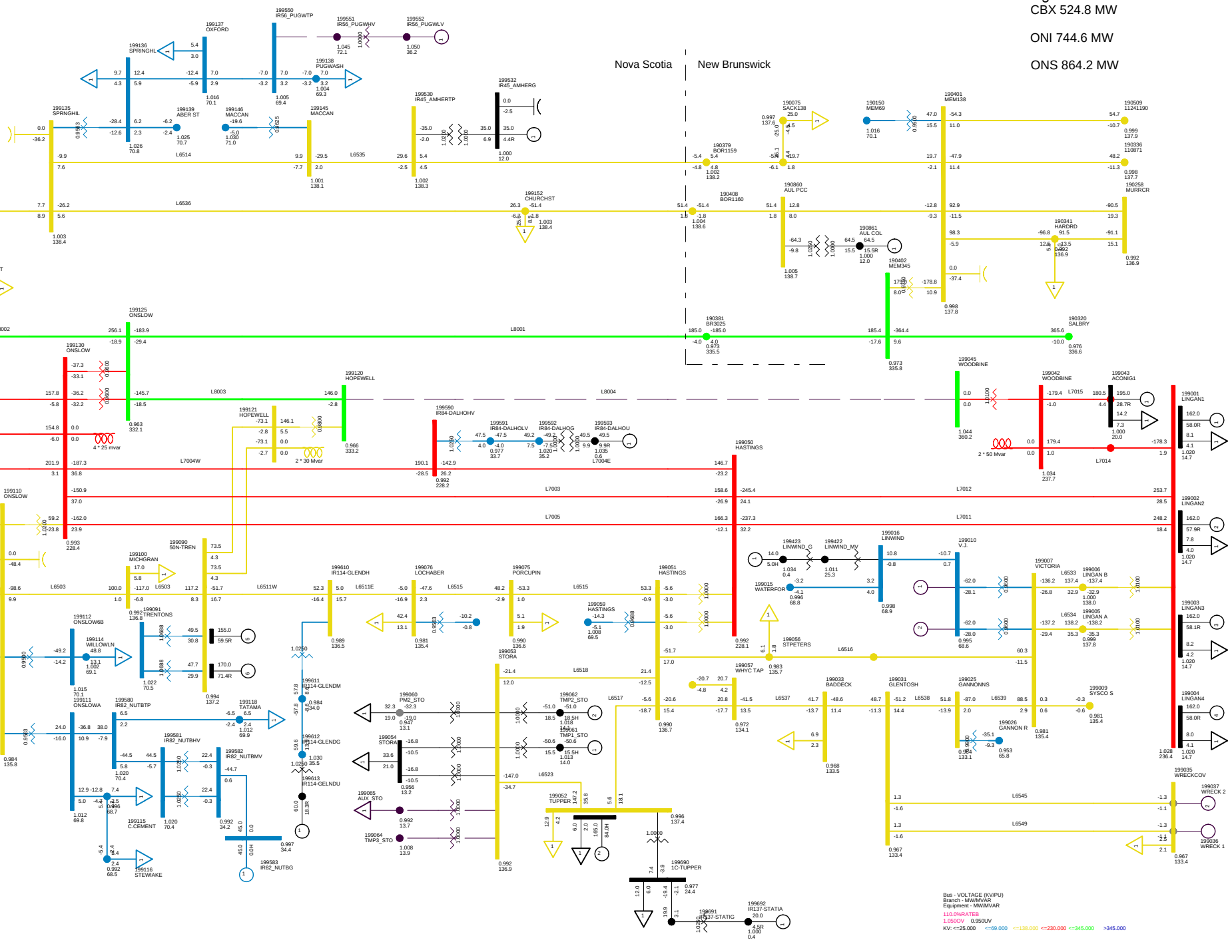

2013 WINTER PEAK NS IMPORT 200 MW
C01 LOSE L8004 NO SPS
NORTHEASTERN NS WED, DEC 10 2008 11:21

Total Wind Gen: 140.6 MW
Gross Lingan 648.0 MW
Gross Pt Aconi 195.0 MW

Gross Tupper 165.0 MW
Gross Trenton 325.0 MW
Gross Tuft's Cove 378.1 MW

Gross Wreck Cove 0.0 MW
Gross Gas Turbine 24.0 MW
Gross Small Hydro 182.4 MW

Net Stora Load 168.4 MW
Total BMPC Load 75.5 MW

Figure ___

NSX -231.4 MW

CBX 533.9 MW

ONI 744.7 MW

ONS 865.8 MW

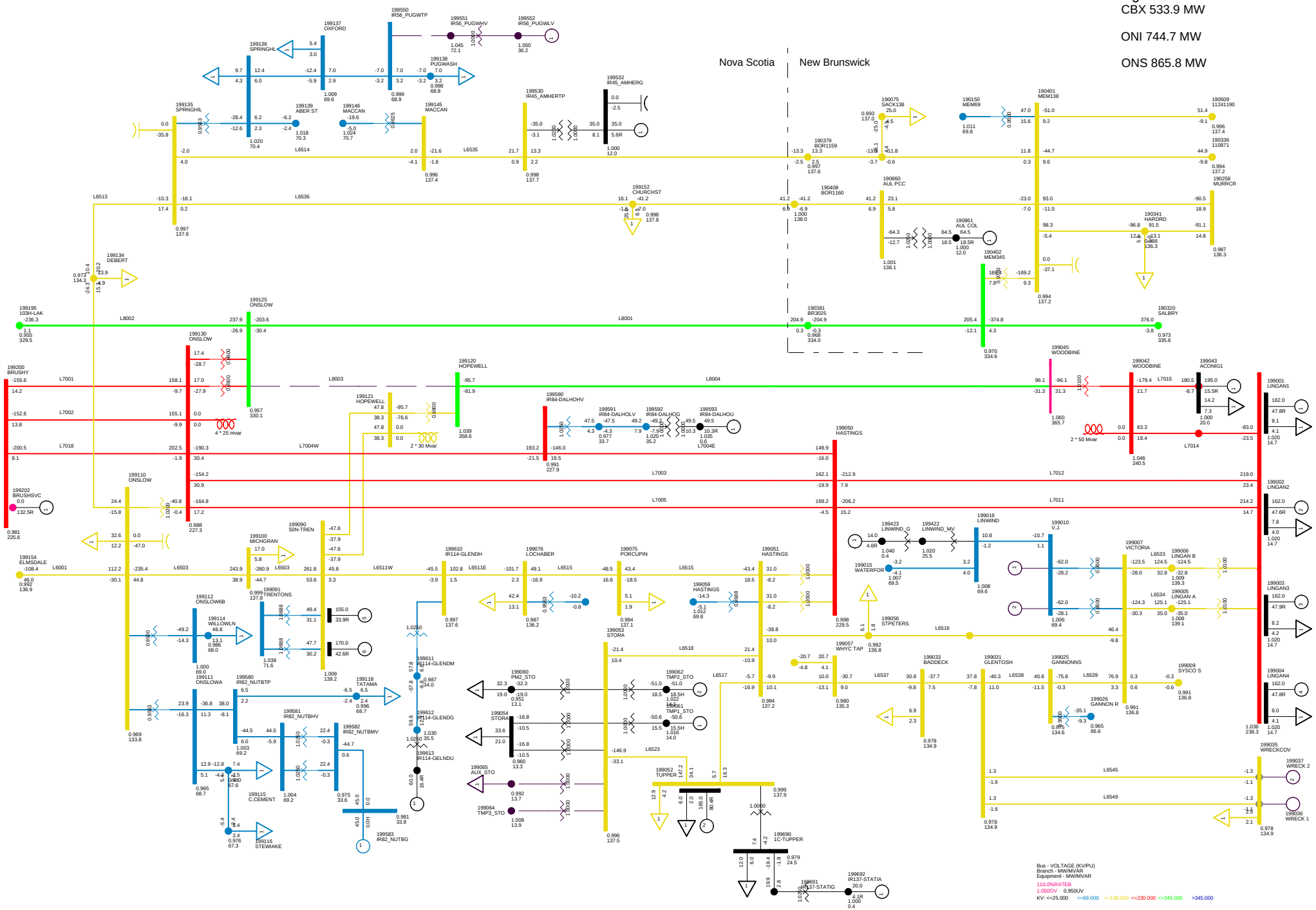

2013 WINTER PEAK NS IMPORT 200 MW
C02 LOSE L8003 NO SPS
NORTHEASTERN NS WED, DEC 10 2008 11:22

Total Wind Gen: 140.6 MW
Gross Lingan 648.0 MW
Gross Pt Aconi 195.0 MW

Gross Tupper 165.0 MW
Gross Trenton 325.0 MW
Gross Tuft's Cove 378.1 MW

Gross Wreck Cove 0.0 MW
Gross Gas Turbine 24.0 MW
Gross Small Hydro 182.4 MW

Net Stora Load 168.3 MW
Total BMPC Load 75.5 MW

Figure ___

NSX -214.8 MW

CBX 543.1 MW

ONI 771.7 MW

ONS 875.6 MW

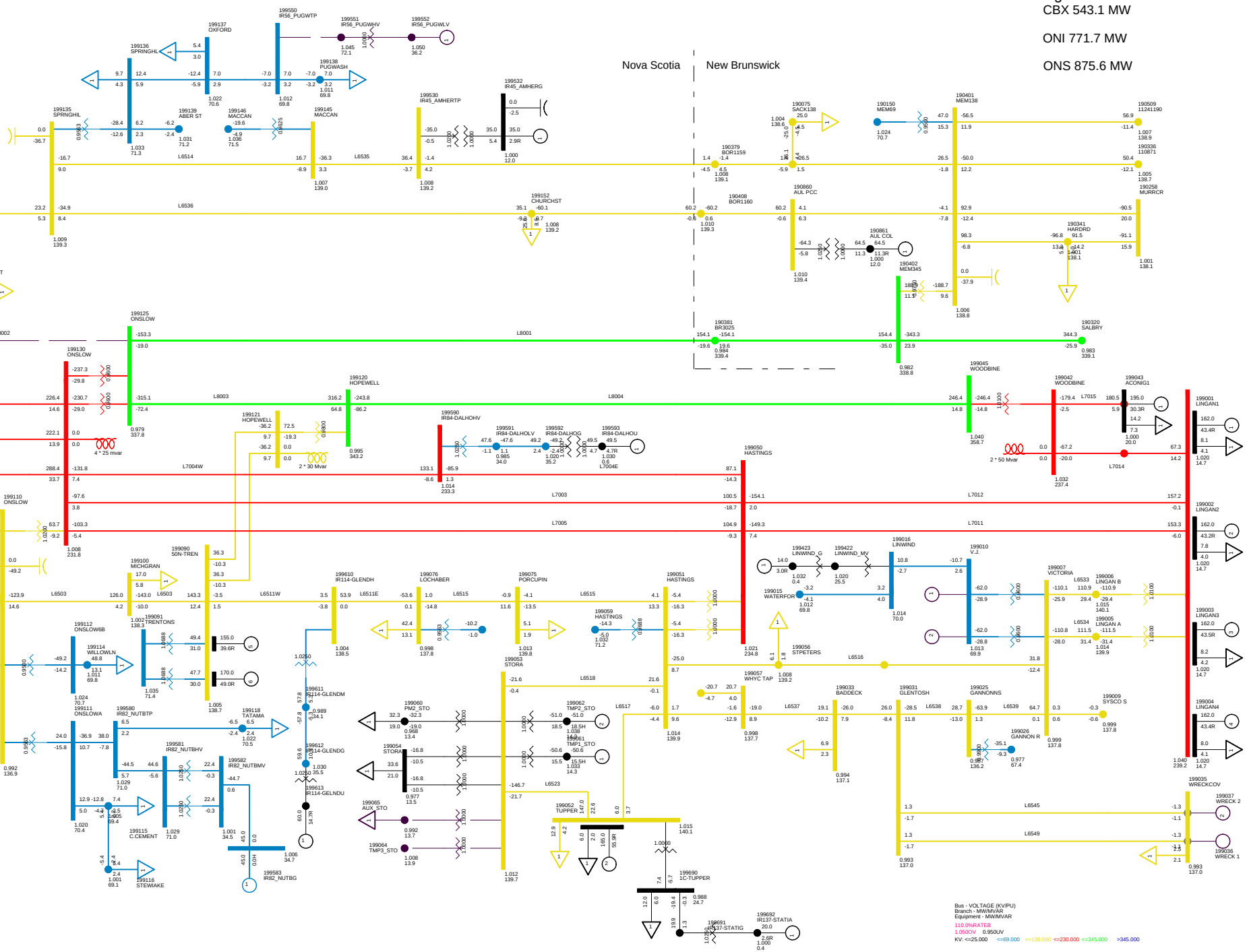

2013 WINTER PEAK NS IMPORT 200 MW
C03 LOSE L8002
NORTHEASTERN NS WED, DEC 10 2008 11:22

Total Wind Gen: 140.6 MW
Gross Lingan 648.0 MW
Gross Pt Aconi 195.0 MW

Gross Tupper 165.0 MW
Gross Trenton 325.0 MW
Gross Tuft's Cove 378.1 MW

Gross Wreck Cove 0.0 MW
Gross Gas Turbine 24.0 MW
Gross Small Hydro 182.4 MW

Net Stora Load 168.3 MW
Total BMPC Load 75.5 MW

Figure ___

NSX -215.1 MW

CBX 543.8 MW

ONI 773.3 MW

ONS 864.5 MW

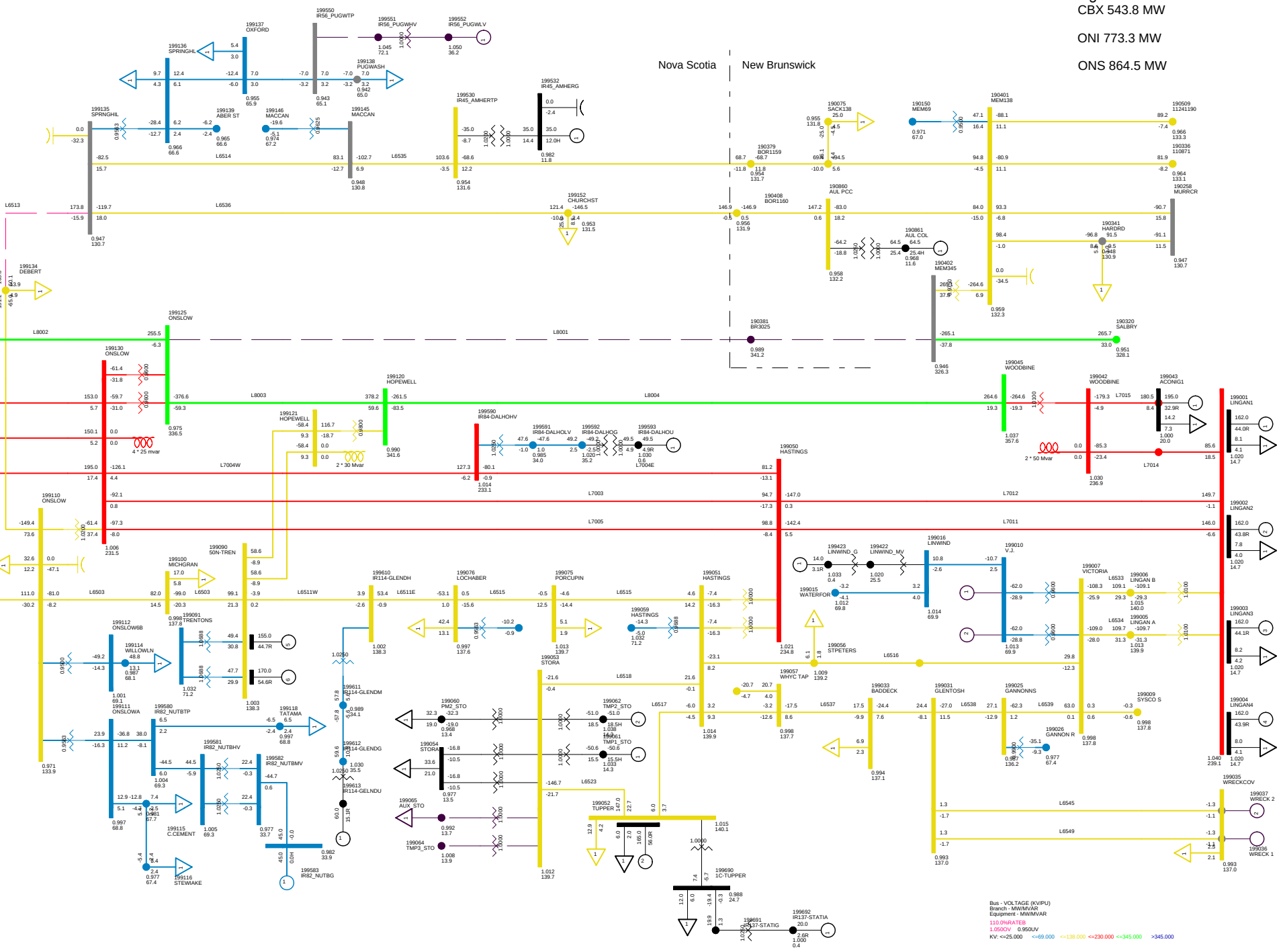
Nova Scotia
New Brunswick
199550 IR56_PUGWTP
199551 IR56_PUGWHV
199552 IR56_PUGWLV
199137 OXFORD
199136 SPRINGHL
199138 PUGWASH
199135 SPRNGHIL
199139 ABER ST
199146 MACCAN
199145 MACCAN
199530 IR45_AMHERTP
199532 IR45_AMHERG
190075 SACK138
190150 MEM69
190401 MEM138
190509 11241190
190379 BOR1159
190336 110871
190258 MURRCR
190860 AUL PCC
190408 BOR1160
190861 AUL COL
190341 HARDRD
190402 MEM345
199152 CHURCHST
199134 DEBERT
199195 103H-LAK
199125 ONSLOW
190381 BR3025
190320 SALBRY
199130 ONSLOW
199120 HOPEWELL
199045 WOODBINE
199042 WOODBINE
199043 ACONIG1
199001 LINGAN1
199200 BRUSHY
199121 HOPEWELL
199590 IR84-DALHOHV
199591 IR84-DALHOLV
199592 IR84-DALHOG
199593 IR84-DALHOU
199050 HASTINGS
199202 BRUSHSVC
199110 ONSLOW
199002 LINGAN2
199154 ELMSDALE
199100 MICHGRAN
199090 50N-TREN
199610 IR114-GLENDH
199076 LOCHABER
199075 PORCUPIN
199051 HASTINGS
199423 LINWIND_G
199422 LINWIND_MV
199016 LINWIND
199010 V.J.
199015 WATERFOR
199007 VICTORIA
199006 LINGAN B
199005 LINGAN A
199003 LINGAN3
199112 ONSLOW6B
199114 WILLOWLN
199091 TRENTONS
199059 HASTINGS
199056 STPETERS
199053 STORA
199057 WHYC TAP
199033 BADDECK
199031 GLENTOSH
199025 GANNONNS
199009 SYSCO S
199004 LINGAN4
199611 IR114-GLENDM
199612 IR114-GLENDG
199613 IR114-GELNDU
199060 PM2_STO
199062 TMP2_STO
199061 TMP1_STO
199054 STORA
199065 AUX_STO
199064 TMP3_STO
199052 TUPPER
199026 GANNON R
199035 WRECKCOV
199037 WRECK 2
199036 WRECK 1
199111 ONSLOWA
199580 IR82_NUTBTP
199118 TATAMA
199581 IR82_NUTBHV
199582 IR82_NUTBMV
199115 C.CEMENT
199116 STEWIAKE
199583 IR82_NUTBG
199690 1C-TUPPER
199691 IR137-STATIG
199692 IR137-STATIA
L6001
L6002
L6003
L6004
L6007
L6008
L6009
L6010
L6011
L6012
L6013
L6014
L6015
L6016
L6017
L6018
L6023
L6024
L6025
L6026
L6027
L6028
L6029
L6030
L6031
L6032
L6033
L6034
L6035
L6036
L6037
L6038
L6039
L6040
L6041
L6042
L6043
L6044
L6045
L6046
L6047
L6048
L6049
L6050
L6051
L6052
L6053
L6054
L6055
L6056
L6057
L6058
L6059
L6060
L6061
L6062

NSX -199.9 MW
CBX 543.8 MW
ONI 773.3 MW
ONS 862.9 MW

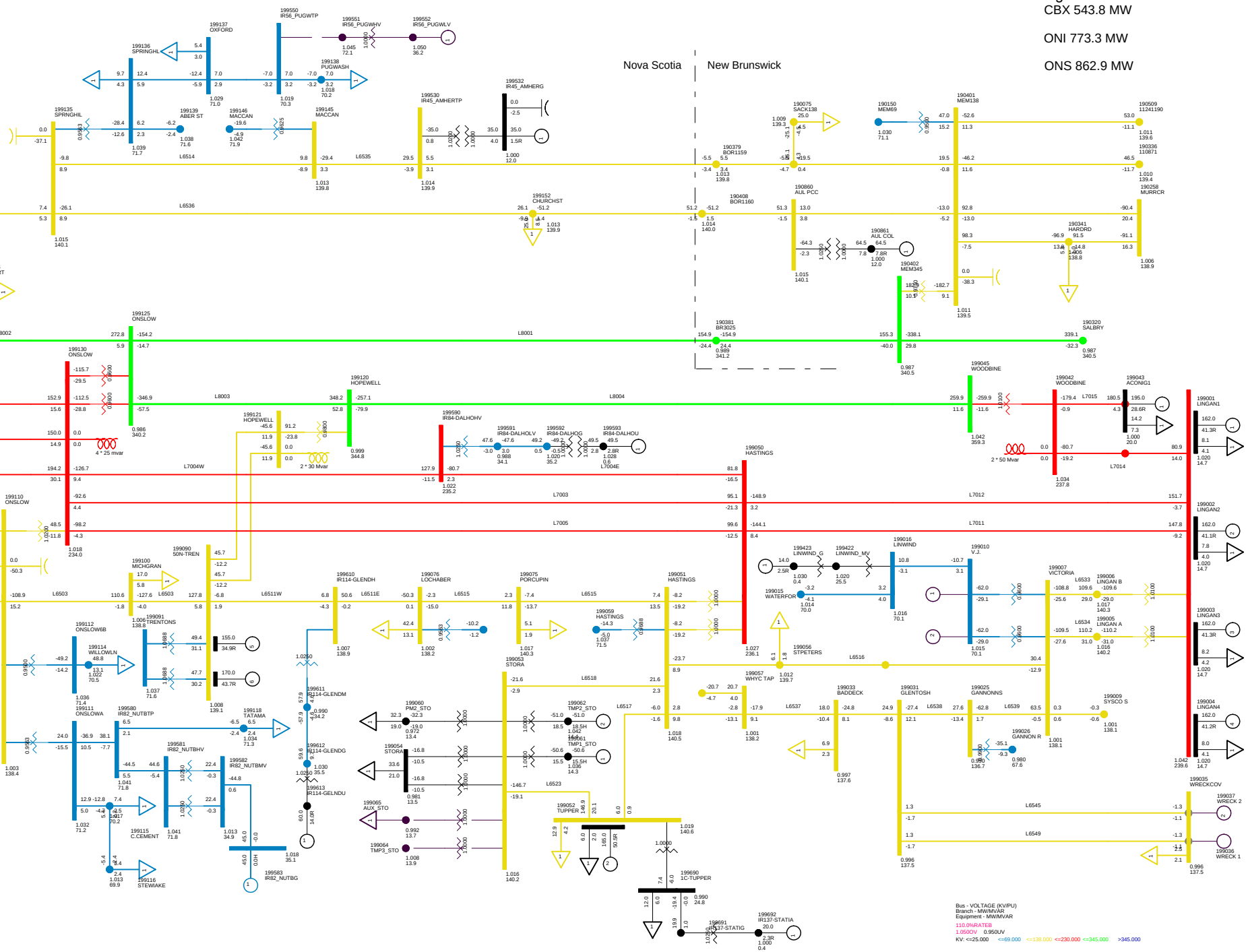

2013 WINTER PEAK STORA 167, NS LOAD 2371
NS-NB=-200; NB-NE=300; CBX=543; ONI=773 ONS=863
NORTHEASTERN NS WED, DEC 10 2008 11:23

Total Wind Gen: 140.6 MW
Gross Lingan 648.0 MW
Gross Pt Aconi 195.0 MW

Gross Tupper 165.0 MW
Gross Trenton 325.0 MW
Gross Tuft's Cove 378.1 MW

Gross Wreck Cove 0.0 MW
Gross Gas Turbine 24.0 MW
Gross Small Hydro 182.4 MW

Net Stora Load 168.3 MW
Total BMPC Load 75.5 MW

Figure ___

NSX -204.5 MW

CBX 539.2 MW

ONI 768.7 MW

ONS 862.9 MW

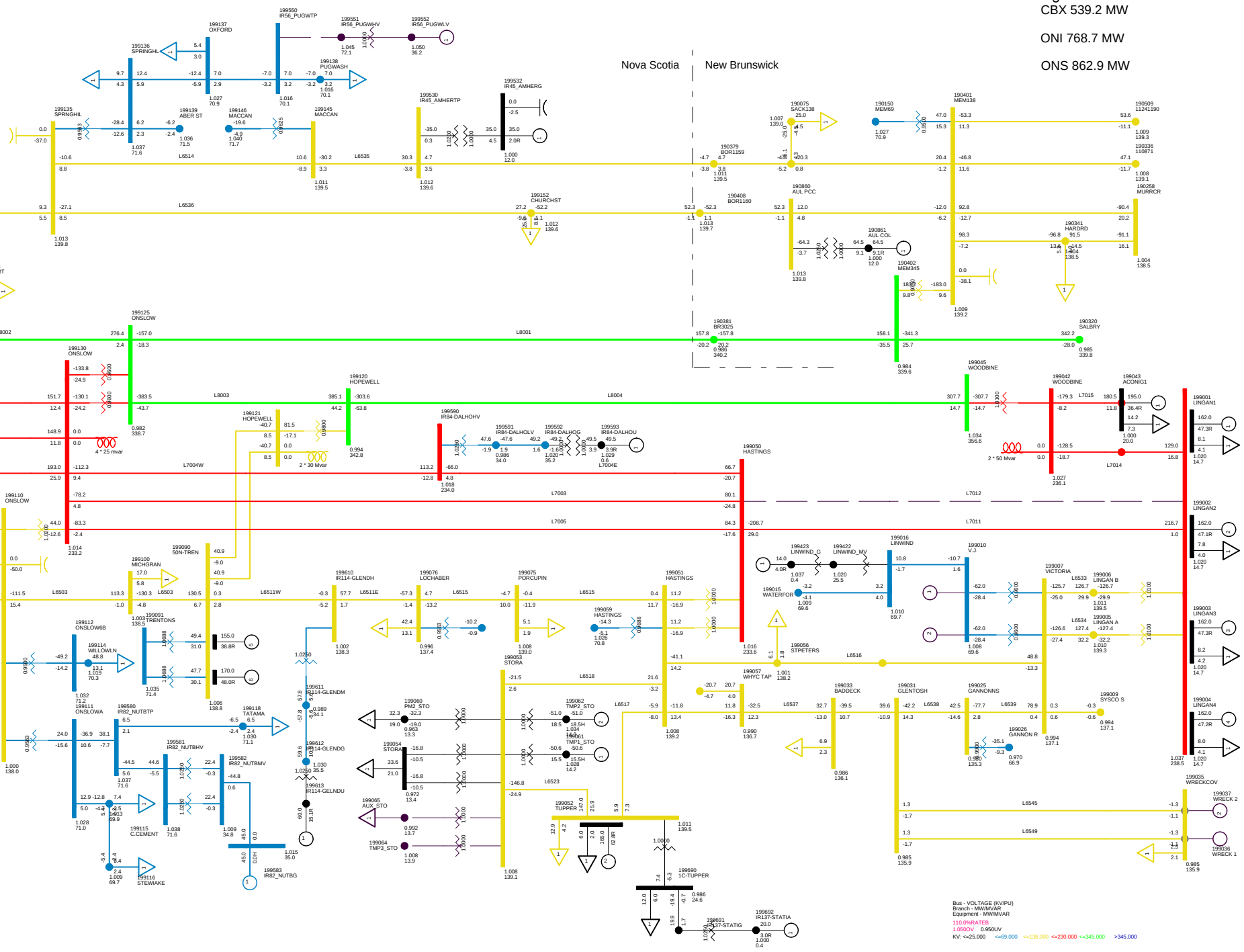

2013 WINTER PEAK NS IMPORT 200 MW
C05 LOSE L7012 NO SPS
NORTHEASTERN NS WED, DEC 10 2008 11:23

Total Wind Gen: 140.6 MW
Gross Lingan 648.0 MW
Gross Pt Aconi 195.0 MW

Gross Tupper 165.0 MW
Gross Trenton 325.0 MW
Gross Tuft's Cove 378.1 MW

Gross Wreck Cove 0.0 MW
Gross Gas Turbine 24.0 MW
Gross Small Hydro 182.4 MW

Net Stora Load 168.3 MW
Total BMPC Load 75.5 MW

Figure ___

NSX -202.4 MW

CBX 541.3 MW

ONI 770.8 MW

ONS 862.9 MW

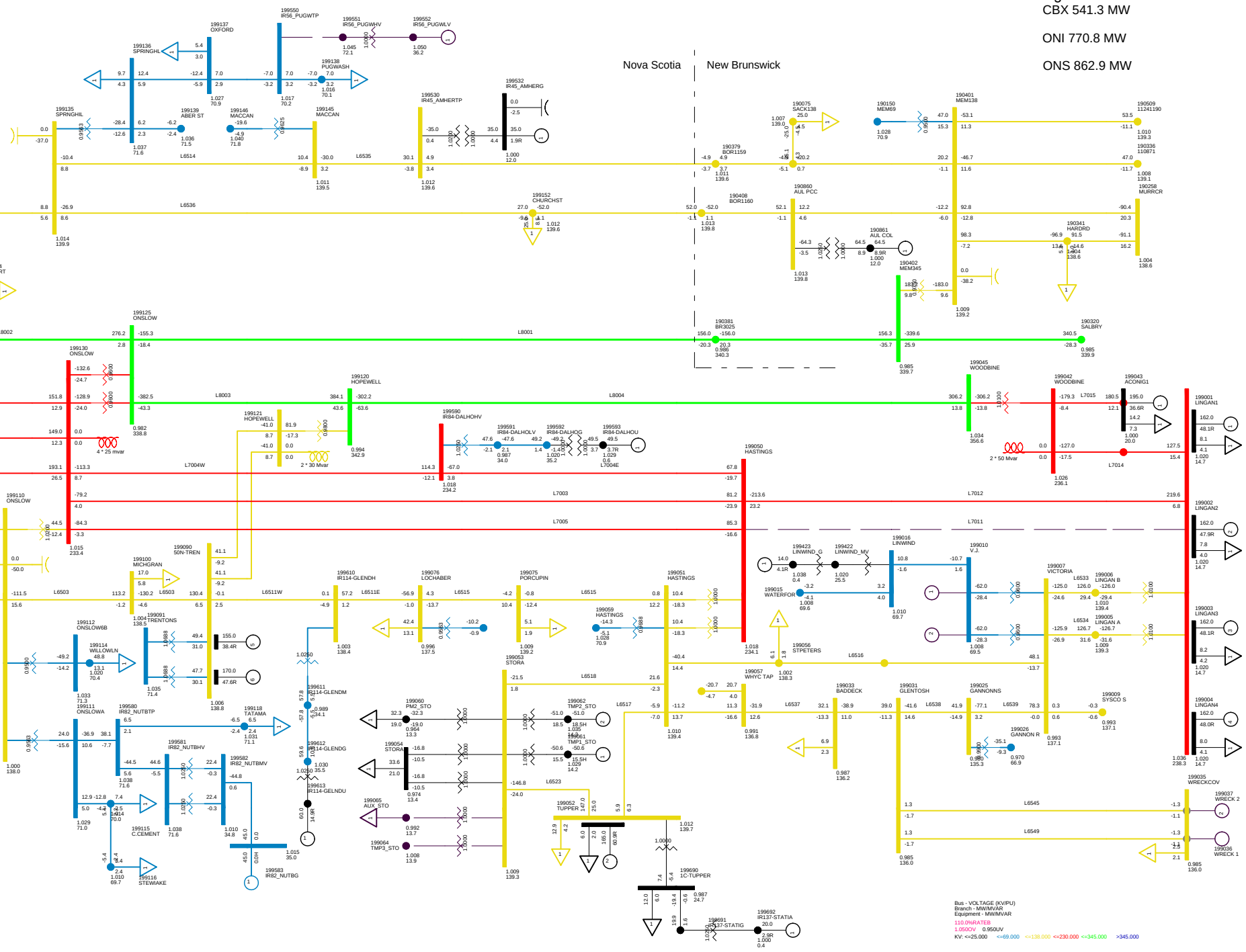

2013 WINTER PEAK NS IMPORT 200 MW
C06 LOSE L7011
NORTHEASTERN NS WED, DEC 10 2008 11:23

Total Wind Gen: 140.6 MW
Gross Lingan 648.0 MW
Gross Pt Aconi 195.0 MW

Gross Tupper 165.0 MW
Gross Trenton 325.0 MW
Gross Tuft's Cove 378.1 MW

Gross Wreck Cove 0.0 MW
Gross Gas Turbine 24.0 MW
Gross Small Hydro 182.4 MW

Net Stora Load 168.3 MW
Total BMPC Load 75.5 MW

Figure ___

NSX -202.8 MW

CBX 544.6 MW

ONI 770.5 MW

ONS 863.0 MW

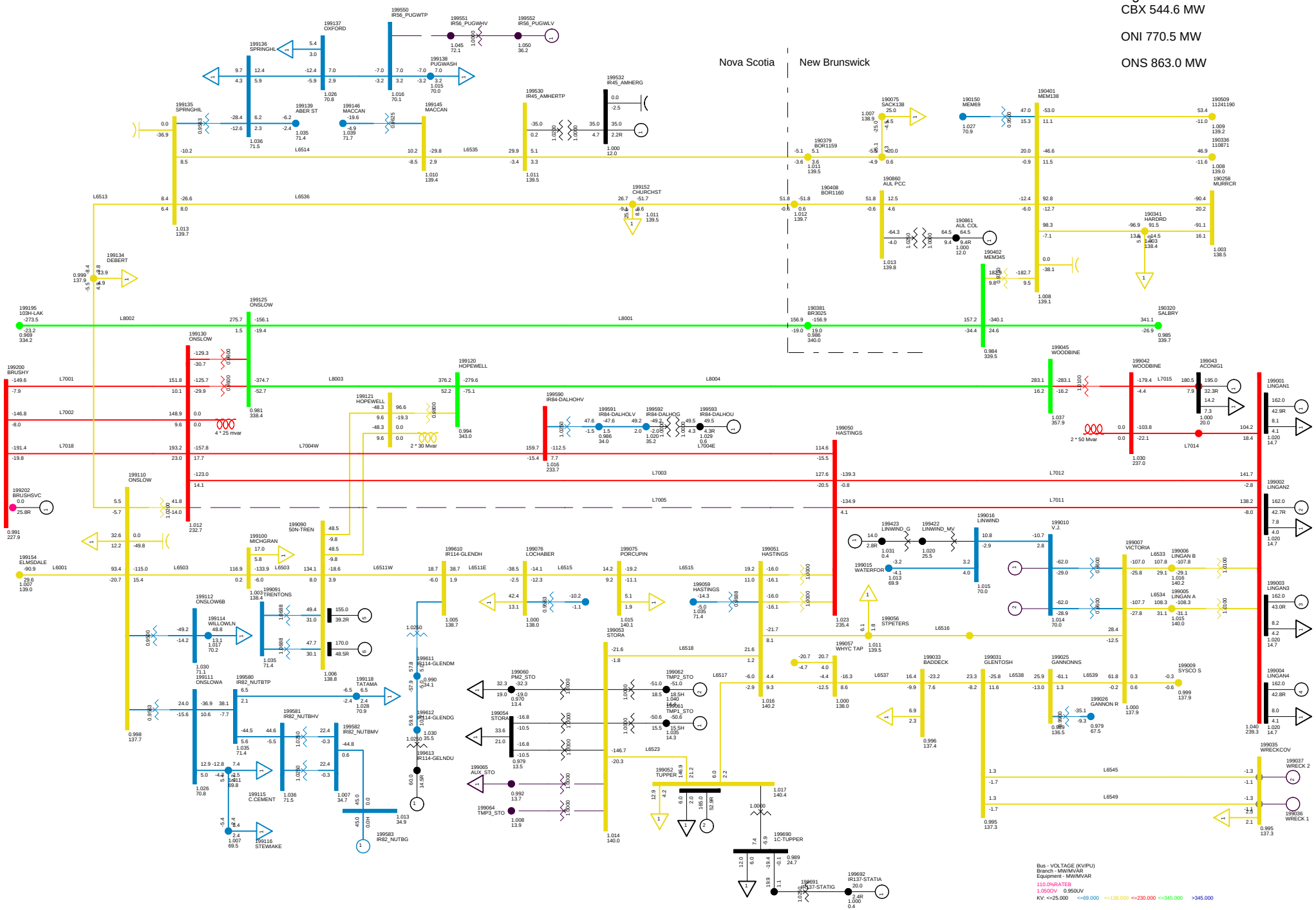

2013 WINTER PEAK NS IMPORT 200 MW
C07 LOSE L7005
NORTHEASTERN NS WED, DEC 10 2008 11:23

Total Wind Gen: 140.6 MW
Gross Lingan 648.0 MW
Gross Pt Aconi 195.0 MW

Gross Tupper 165.0 MW
Gross Trenton 325.0 MW
Gross Tuft's Cove 378.1 MW

Gross Wreck Cove 0.0 MW
Gross Gas Turbine 24.0 MW
Gross Small Hydro 182.4 MW

Net Stora Load 168.3 MW
Total BMPC Load 75.5 MW

Figure ___

NSX -204.8 MW

CBX 543.9 MW

ONI 773.4 MW

ONS 868.0 MW

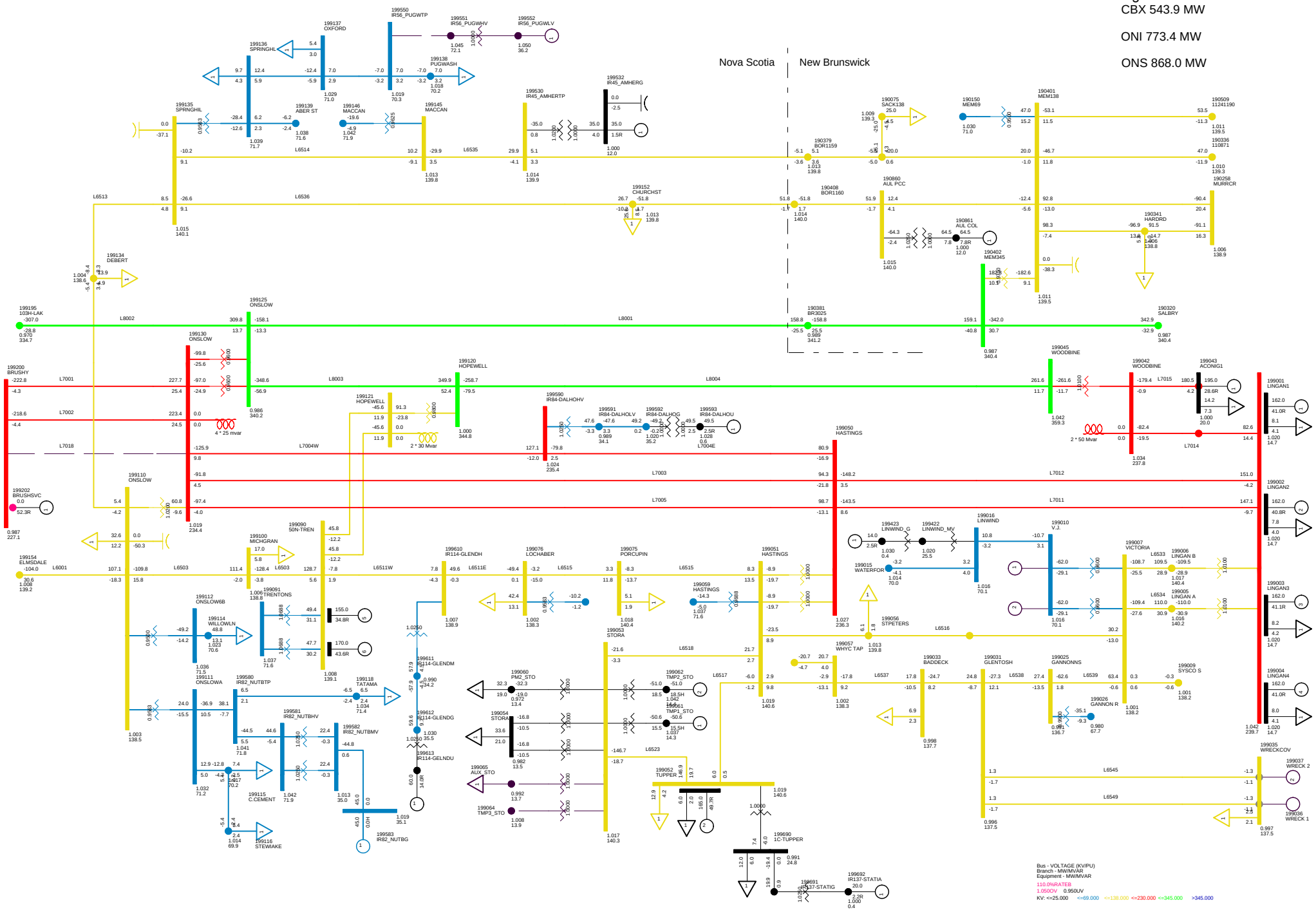

2013 WINTER PEAK NS IMPORT 200 MW
C08 LOSE L7018
NORTHEASTERN NS WED, DEC 10 2008 11:23

Total Wind Gen: 140.6 MW
Gross Lingan 648.0 MW
Gross Pt Aconi 195.0 MW

Gross Tupper 165.0 MW
Gross Trenton 325.0 MW
Gross Tuft's Cove 378.1 MW

Gross Wreck Cove 0.0 MW
Gross Gas Turbine 24.0 MW
Gross Small Hydro 182.4 MW

Net Stora Load 168.3 MW
Total BMPC Load 75.5 MW

Figure ___

Total Wind Gen: 140.6 MW
Gross Tupper 165.0 MW
Gross Wreck Cove 0.0 MW
Gross Lingan 648.0 MW
Gross Trenton 325.0 MW
Gross Gas Turbine 24.0 MW
Gross Pt Aconi 195.0 MW
Gross Tuft's Cove 378.1 MW
Gross Small Hydro 182.4 MW
Net Stora Load 168.3 MW
Total BMPC Load 75.5 MW

NSX -201.4 MW
CBX 543.8 MW
ONI 773.2 MW
ONS 864.4 MW

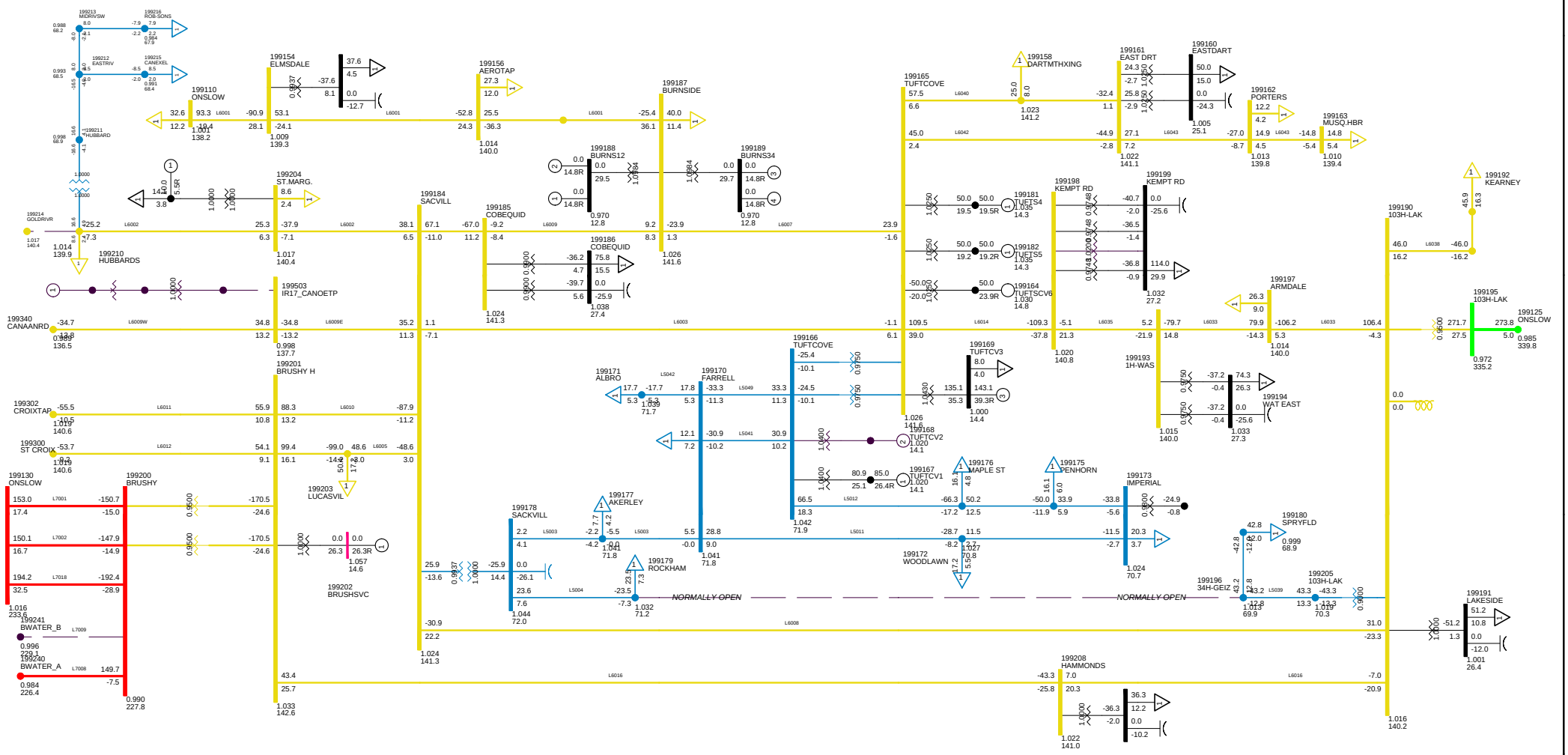

2013 WINTER PEAK NS IMPORT 200 MW
C09 LOSE L7009
METRO ZONE WED, DEC 10 2008 11:23

Bus - VOLTAGE (KV/PU)
Branch - MW/MVAR
Equipment - MW/MVAR
100.0%RATE8
1.050OV 0.950UV
KV: <=30.000 <=69.000 <=138.000 <=230.000 <=345.000 >345.000

Figure __

NSX -202.8 MW

CBX 544.8 MW

ONI 770.5 MW

ONS 863.0 MW

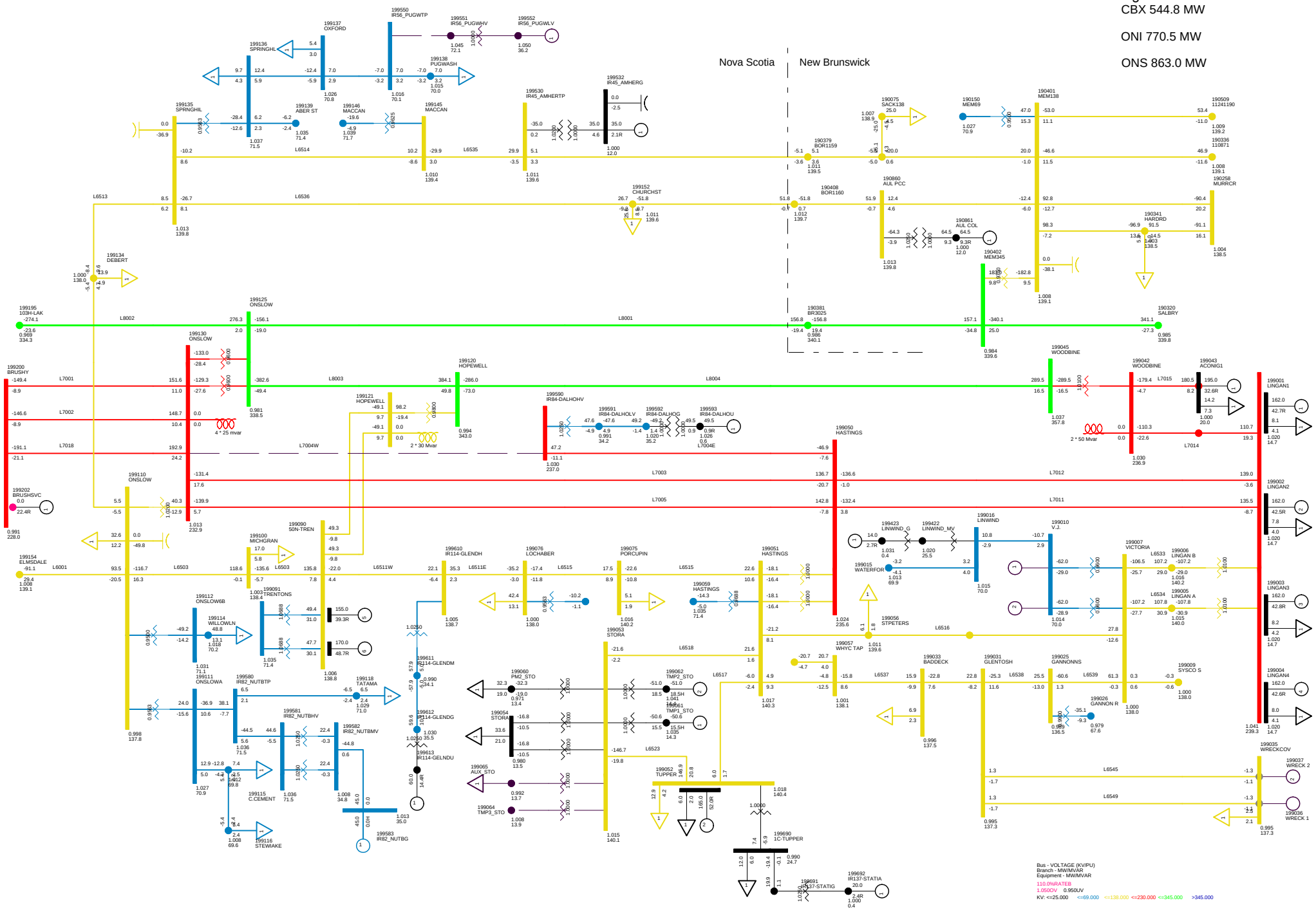

2013 WINTER PEAK NS IMPORT 200 MW
C10 LOSE L7004 WEST
NORTHEASTERN NS WED, DEC 10 2008 11:23

Total Wind Gen: 140.6 MW
Gross Lingan 648.0 MW
Gross Pt Aconi 195.0 MW

Gross Tupper 165.0 MW
Gross Trenton 325.0 MW
Gross Tuft's Cove 378.1 MW

Gross Wreck Cove 0.0 MW
Gross Gas Turbine 24.0 MW
Gross Small Hydro 182.4 MW

Net Stora Load 168.3 MW
Total BMPC Load 75.5 MW

Figure ___

NSX -205.0 MW

CBX 539.9 MW

ONI 768.1 MW

ONS 863.0 MW

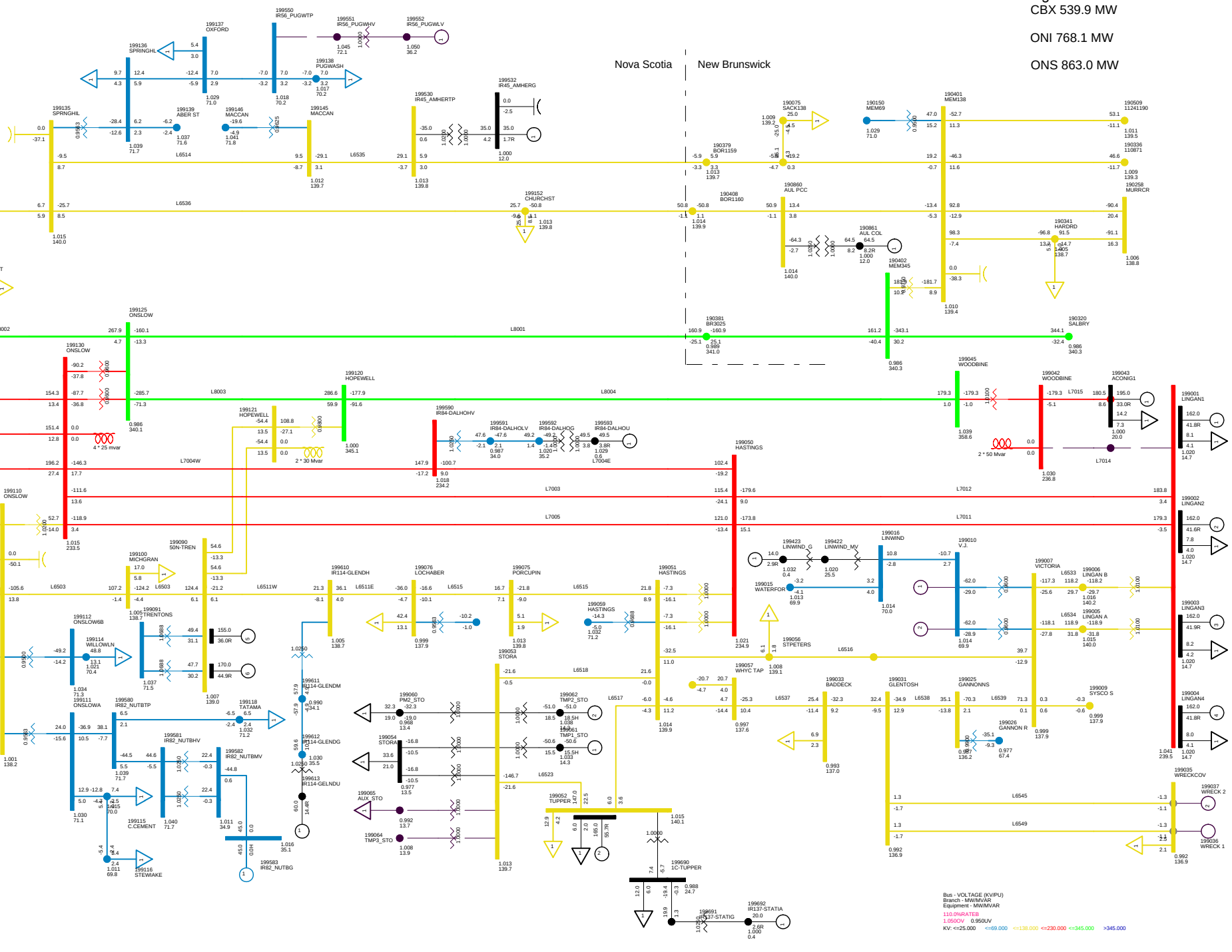

2013 WINTER PEAK NS IMPORT 200 MW
C11 LOSE L7014
NORTHEASTERN NS WED, DEC 10 2008 11:23

Total Wind Gen: 140.6 MW
Gross Lingan 648.0 MW
Gross Pt Aconi 195.0 MW

Gross Tupper 165.0 MW
Gross Trenton 325.0 MW
Gross Tuft's Cove 378.1 MW

Gross Wreck Cove 0.0 MW
Gross Gas Turbine 24.0 MW
Gross Small Hydro 182.4 MW

Net Stora Load 168.3 MW
Total BMPC Load 75.5 MW

Figure ___

NSX -199.9 MW

CBX 543.8 MW

ONI 773.3 MW

ONS 862.9 MW

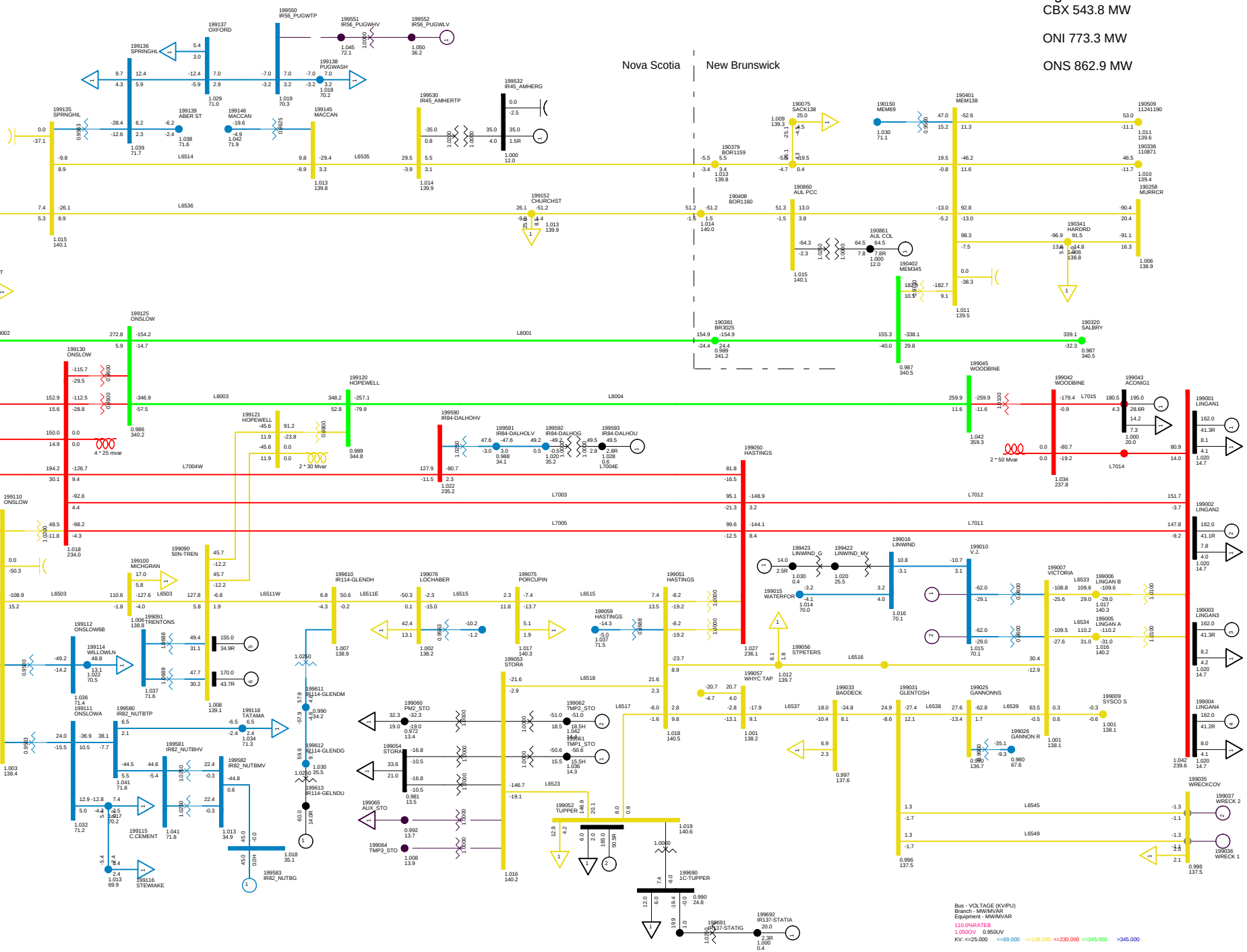

2013 WINTER PEAK STORA 167, NS LOAD 2371
NS-NB=-200; NB-NE=300; CBX=543; ONI=773 ONS=863
NORTHEASTERN NS WED, DEC 10 2008 11:24

Total Wind Gen: 140.6 MW
Gross Lingan 648.0 MW
Gross Pt Aconi 195.0 MW

Gross Tupper 165.0 MW
Gross Trenton 325.0 MW
Gross Tuft's Cove 378.1 MW

Gross Wreck Cove 0.0 MW
Gross Gas Turbine 24.0 MW
Gross Small Hydro 182.4 MW

Net Stora Load 168.3 MW
Total BMPC Load 75.5 MW

Figure ___

NSX -185.2 MW

CBX 543.5 MW

ONI 787.8 MW

ONS 862.5 MW

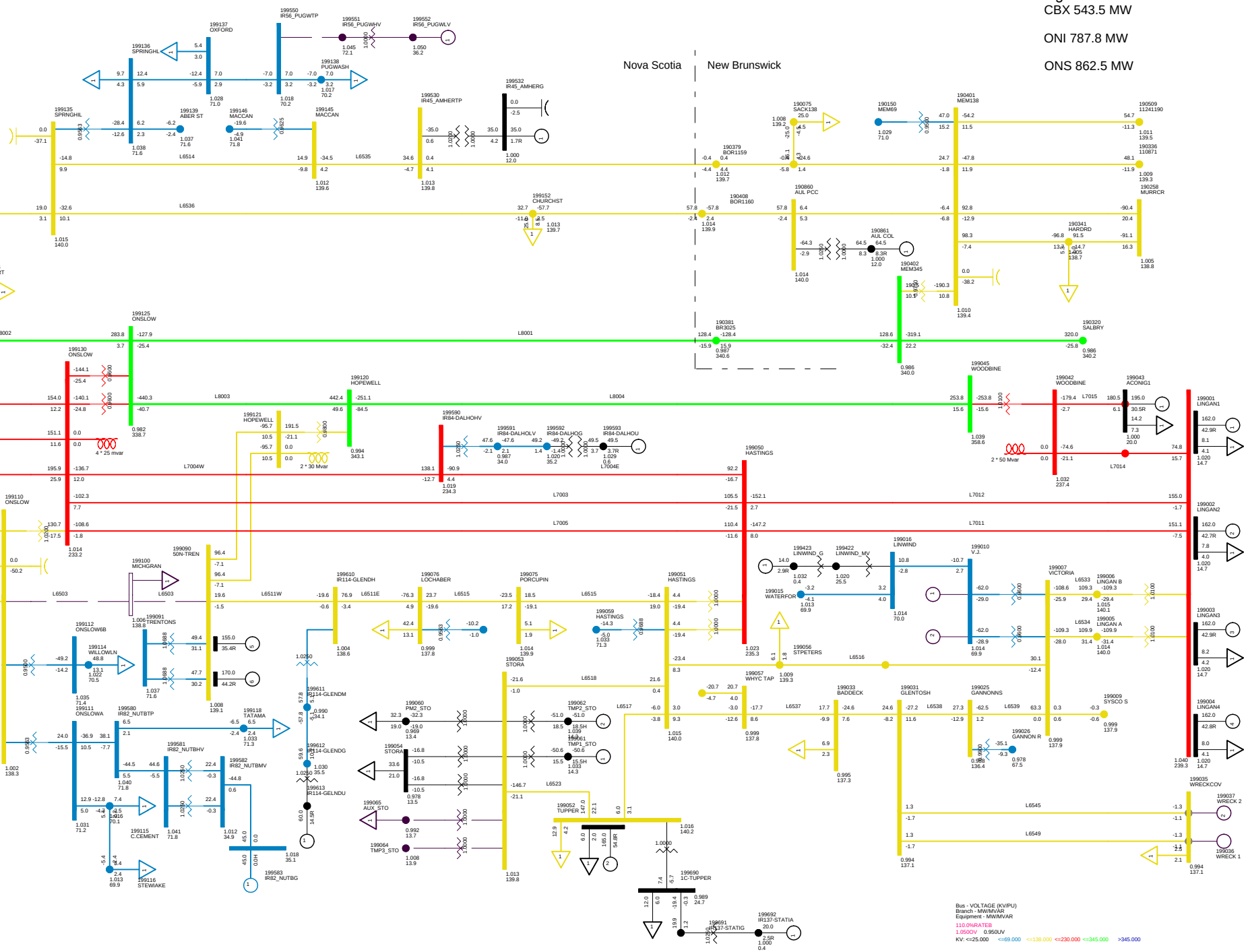

2013 WINTER PEAK NS IMPORT 200 MW
C12 LOSE 6503
NORTHEASTERN NS WED, DEC 10 2008 11:24

Total Wind Gen: 140.6 MW
Gross Lingan 648.0 MW
Gross Pt Aconi 195.0 MW

Gross Tupper 165.0 MW
Gross Trenton 325.0 MW
Gross Tuft's Cove 378.1 MW

Gross Wreck Cove 0.0 MW
Gross Gas Turbine 24.0 MW
Gross Small Hydro 182.4 MW

Net Stora Load 168.3 MW
Total BMPC Load 75.5 MW

Figure ___

NSX -195.0 MW

CBX 544.0 MW

ONI 778.1 MW

ONS 862.9 MW

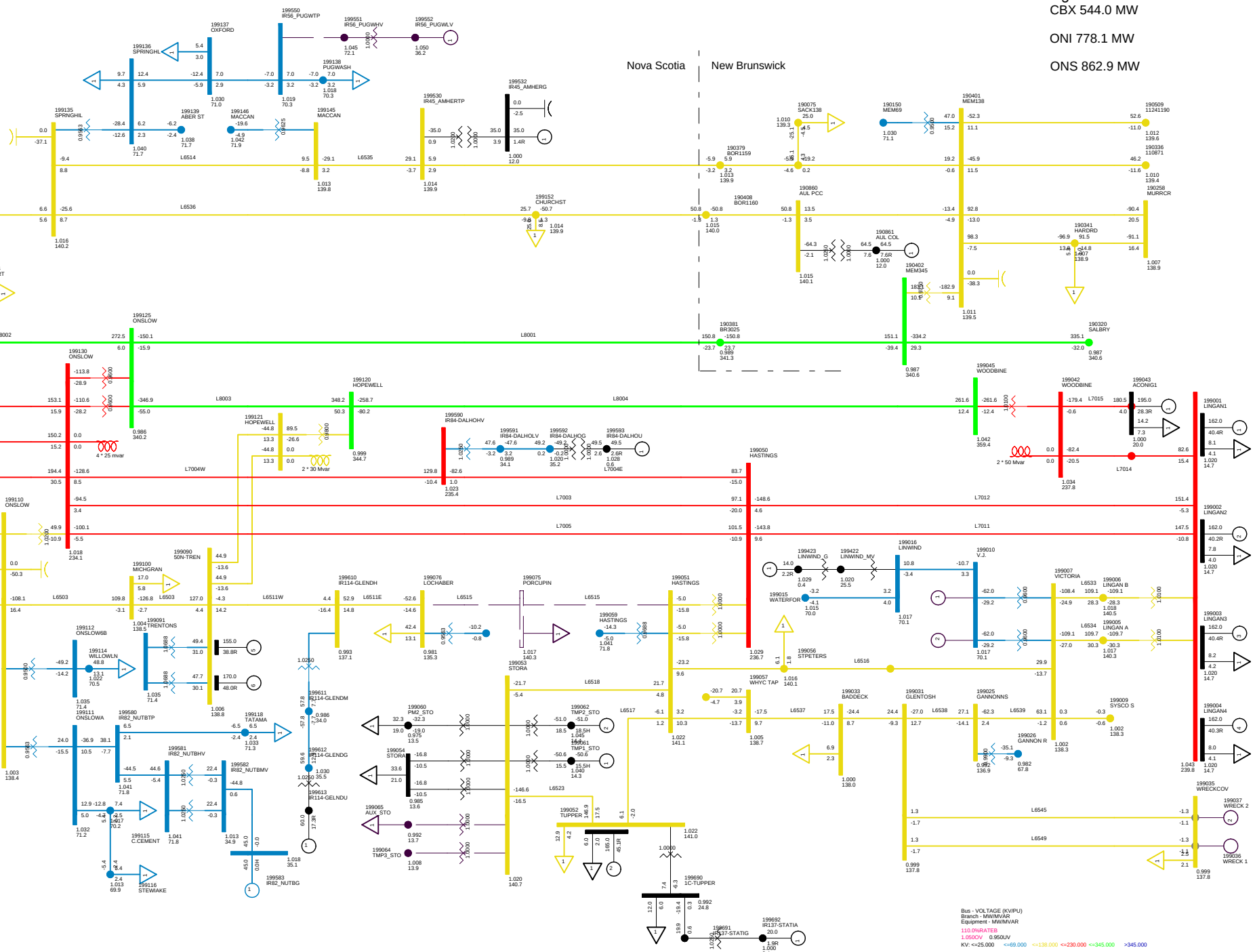

2013 WINTER PEAK NS IMPORT 200 MW
C13 LOSE L6511
NORTHEASTERN NS WED, DEC 10 2008 11:24

Total Wind Gen: 140.6 MW
Gross Lingan 648.0 MW
Gross Pt Aconi 195.0 MW

Gross Tupper 165.0 MW
Gross Trenton 325.0 MW
Gross Tuft's Cove 378.1 MW

Gross Wreck Cove 0.0 MW
Gross Gas Turbine 24.0 MW
Gross Small Hydro 182.4 MW

Net Stora Load 168.3 MW
Total BMPC Load 75.5 MW

Figure ___

NSX -201.0 MW

CBX 543.0 MW

ONI 772.1 MW

ONS 862.9 MW

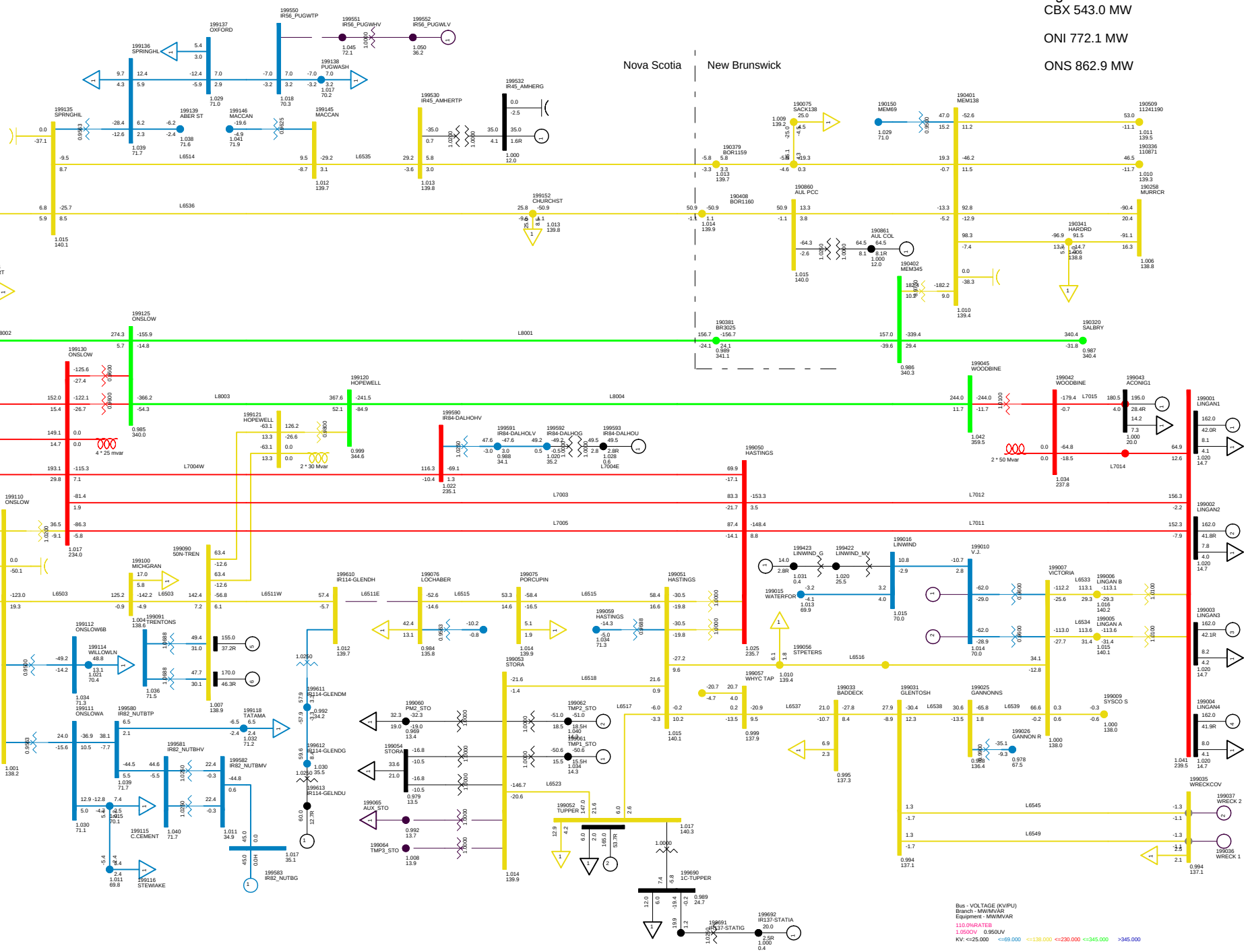

2013 WINTER PEAK NS IMPORT 200 MW
C14 LOSE L6511E
NORTHEASTERN NS WED, DEC 10 2008 11:24

Total Wind Gen: 140.6 MW
Gross Lingan 648.0 MW
Gross Pt Aconi 195.0 MW

Gross Tupper 165.0 MW
Gross Trenton 325.0 MW
Gross Tuft's Cove 378.1 MW

Gross Wreck Cove 0.0 MW
Gross Gas Turbine 24.0 MW
Gross Small Hydro 182.4 MW

Net Stora Load 168.3 MW
Total BMPC Load 75.5 MW

Figure ___

NSX -200.0 MW

CBX 543.9 MW

ONI 773.1 MW

ONS 862.9 MW

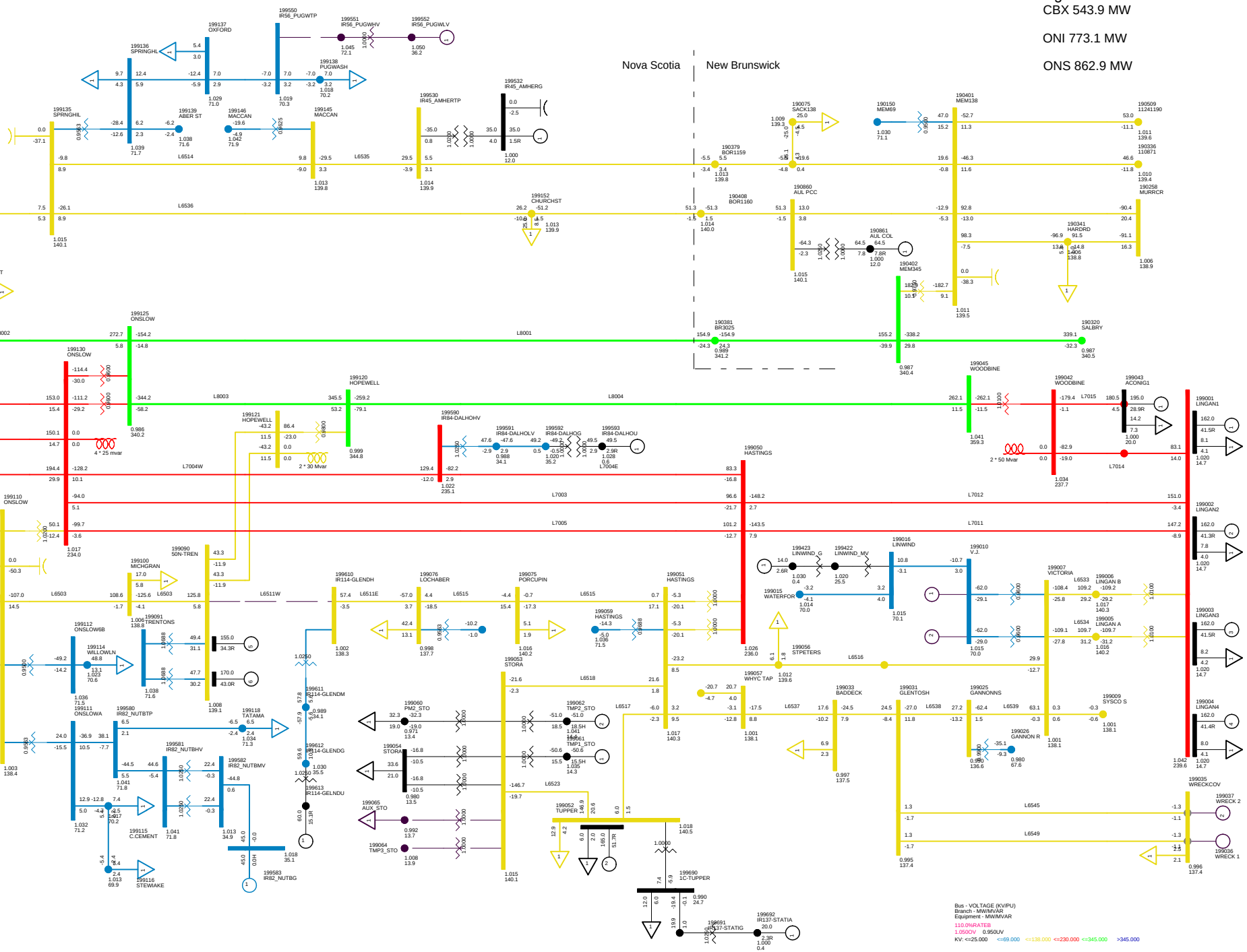

2013 WINTER PEAK NS IMPORT 200 MW
C15 LOSE L6511W
NORTHEASTERN NS WED, DEC 10 2008 11:24

Total Wind Gen: 140.6 MW
Gross Lingan 648.0 MW
Gross Pt Aconi 195.0 MW

Gross Tupper 165.0 MW
Gross Trenton 325.0 MW
Gross Tuft's Cove 378.1 MW

Gross Wreck Cove 0.0 MW
Gross Gas Turbine 24.0 MW
Gross Small Hydro 182.4 MW

Net Stora Load 168.3 MW
Total BMPC Load 75.5 MW

Figure ___

NSX -186.0 MW

CBX 543.9 MW

ONI 773.3 MW

ONS 863.0 MW

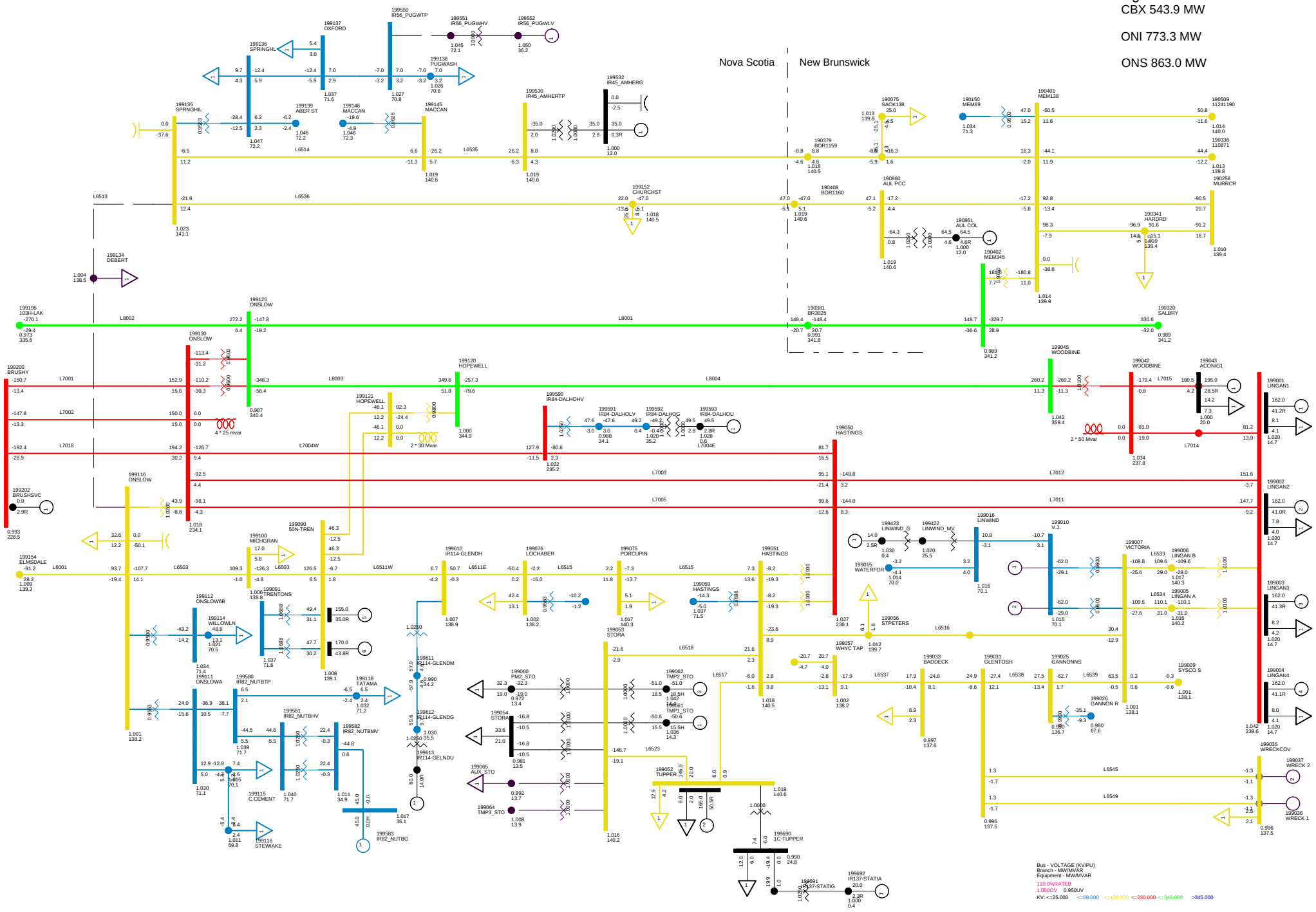

2013 WINTER PEAK NS IMPORT 200 MW
C16 LOSE L6513
NORTHEASTERN NS WED, DEC 10 2008 11:24

Total Wind Gen: 140.6 MW
Gross Lingan 648.0 MW
Gross Pt Aconi 195.0 MW

Gross Tupper 165.0 MW
Gross Trenton 325.0 MW
Gross Tuft's Cove 378.1 MW

Gross Wreck Cove 0.0 MW
Gross Gas Turbine 24.0 MW
Gross Small Hydro 182.4 MW

Net Stora Load 168.3 MW
Total BMPC Load 75.5 MW

Figure ___

NSX -174.9 MW

CBX 543.8 MW

ONI 773.3 MW

ONS 862.9 MW

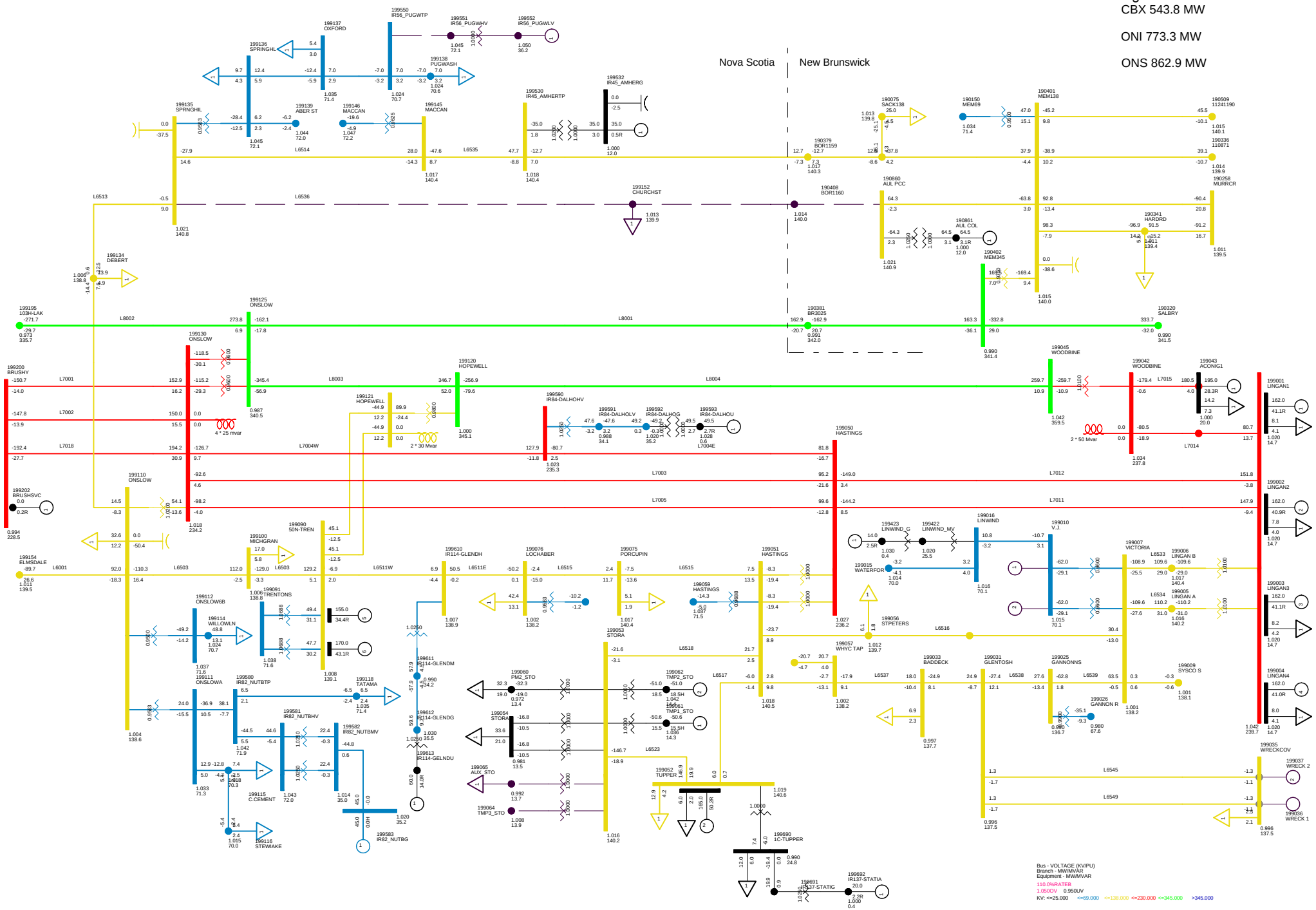

2013 WINTER PEAK NS IMPORT 200 MW
C17 LOSE L6536
NORTHEASTERN NS WED, DEC 10 2008 11:24

Total Wind Gen: 140.6 MW
Gross Lingan 648.0 MW
Gross Pt Aconi 195.0 MW

Gross Tupper 165.0 MW
Gross Trenton 325.0 MW
Gross Tuft's Cove 378.1 MW

Gross Wreck Cove 0.0 MW
Gross Gas Turbine 24.0 MW
Gross Small Hydro 182.4 MW

Net Stora Load 168.3 MW
Total BMPC Load 75.5 MW

Figure ___

NSX -200.0 MW

CBX 543.8 MW

ONI 773.2 MW

ONS 862.8 MW

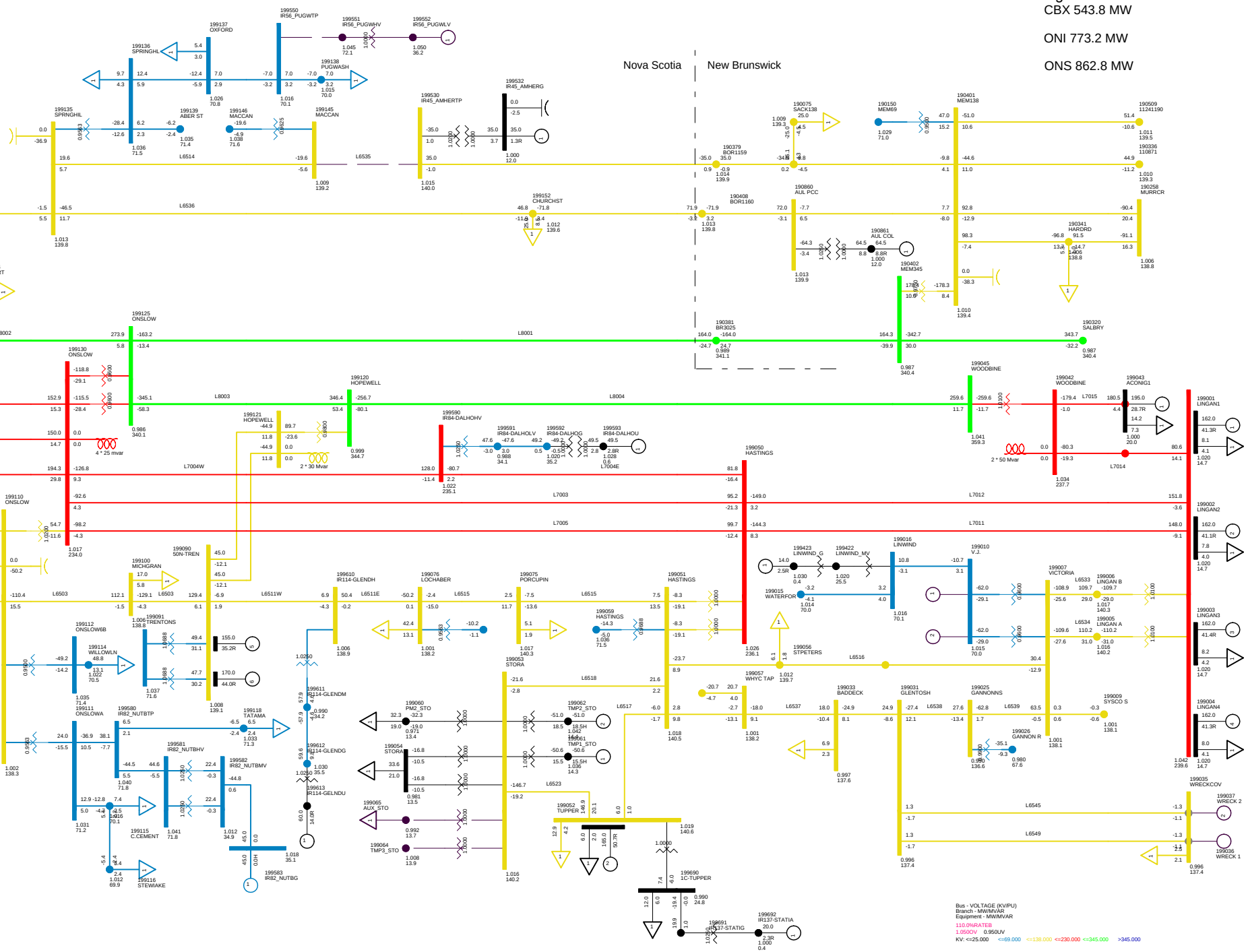

2013 WINTER PEAK NS IMPORT 200 MW
C18 LOSE L6535S
NORTHEASTERN NS WED, DEC 10 2008 11:24

Total Wind Gen: 140.6 MW
Gross Lingan 648.0 MW
Gross Pt Aconi 195.0 MW

Gross Tupper 165.0 MW
Gross Trenton 325.0 MW
Gross Tuft's Cove 378.1 MW

Gross Wreck Cove 0.0 MW
Gross Gas Turbine 24.0 MW
Gross Small Hydro 182.4 MW

Net Stora Load 168.3 MW
Total BMPC Load 75.5 MW

Figure ___

NSX -199.9 MW

CBX 543.8 MW

ONI 773.3 MW

ONS 862.9 MW

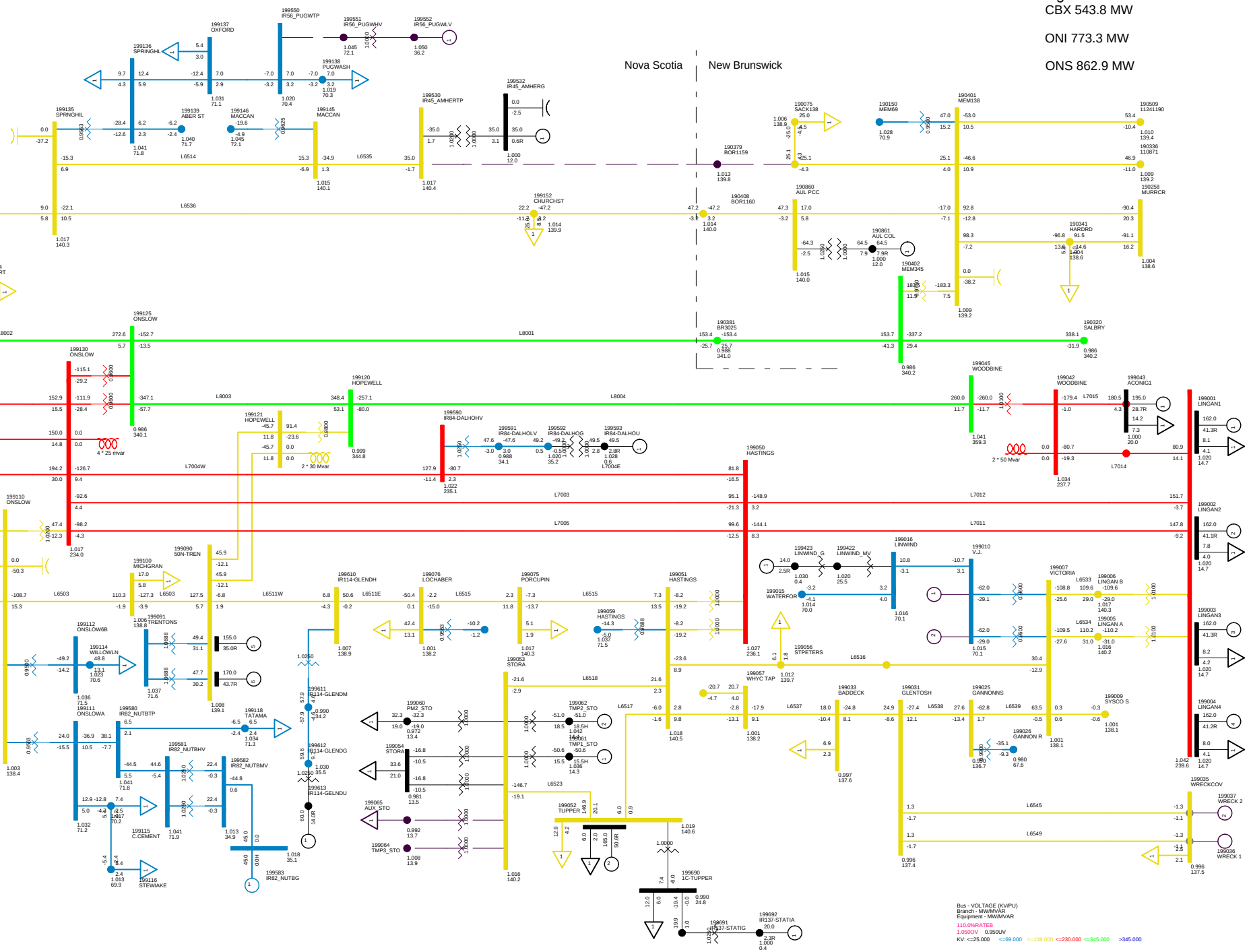

2013 WINTER PEAK NS IMPORT 200 MW
C19 LOSE L6535N
NORTHEASTERN NS WED, DEC 10 2008 11:24

Total Wind Gen: 140.6 MW
Gross Lingan 648.0 MW
Gross Pt Aconi 195.0 MW

Gross Tupper 165.0 MW
Gross Trenton 325.0 MW
Gross Tuft's Cove 378.1 MW

Gross Wreck Cove 0.0 MW
Gross Gas Turbine 24.0 MW
Gross Small Hydro 182.4 MW

Net Stora Load 168.3 MW
Total BMPC Load 75.5 MW

Figure ___

NSX -173.0 MW

CBX 571.7 MW

ONI 800.1 MW

ONS 862.9 MW

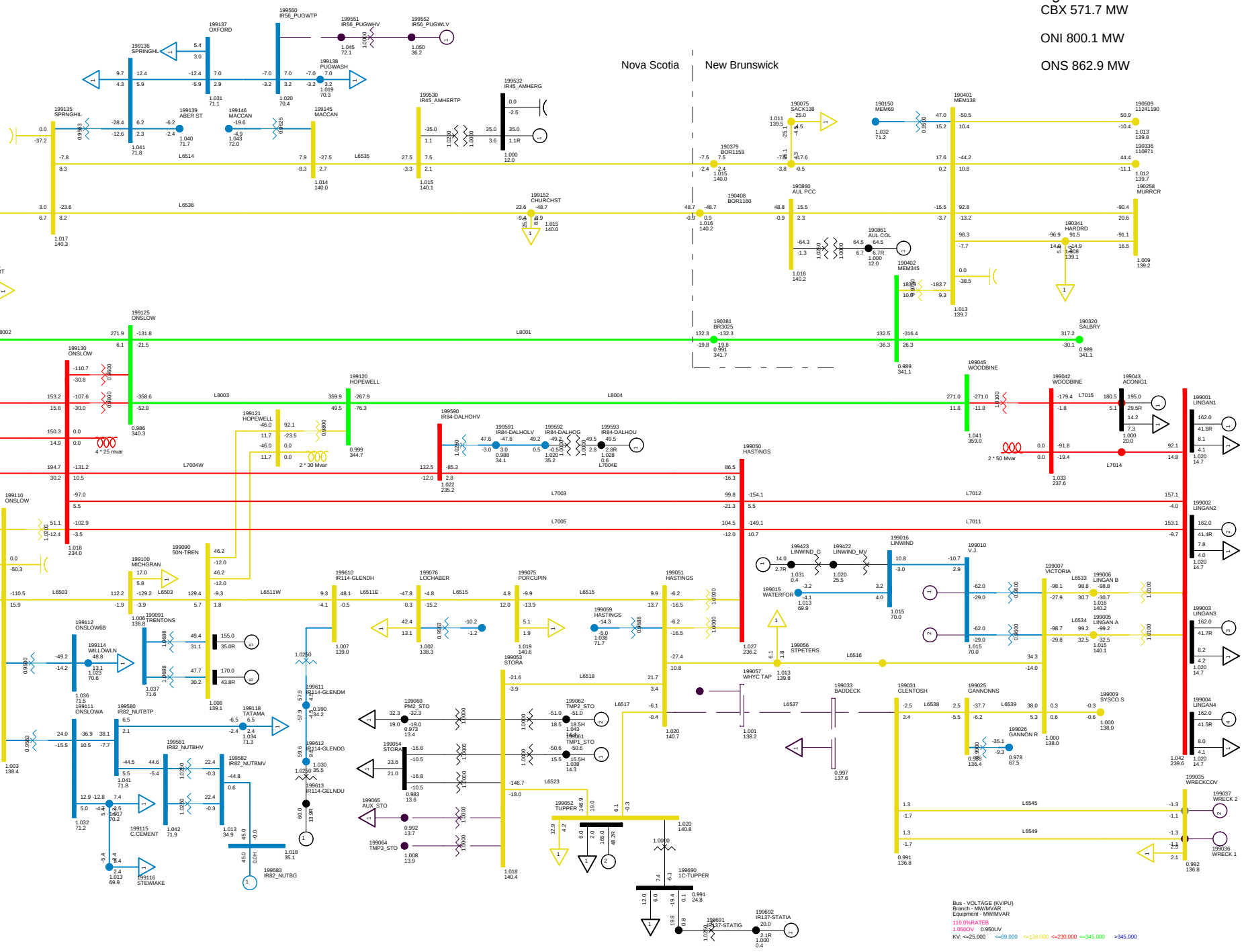

2013 WINTER PEAK NS IMPORT 200 MW
C20 LOSE L6537
NORTHEASTERN NS WED, DEC 10 2008 11:24

Total Wind Gen: 140.6 MW
Gross Lingan 648.0 MW
Gross Pt Aconi 195.0 MW

Gross Tupper 165.0 MW
Gross Trenton 325.0 MW
Gross Tuft's Cove 378.1 MW

Gross Wreck Cove 0.0 MW
Gross Gas Turbine 24.0 MW
Gross Small Hydro 182.4 MW

Net Stora Load 168.3 MW
Total BMPC Load 75.5 MW

Figure ___

NSX -194.2 MW

CBX 549.6 MW

ONI 778.8 MW

ONS 862.9 MW

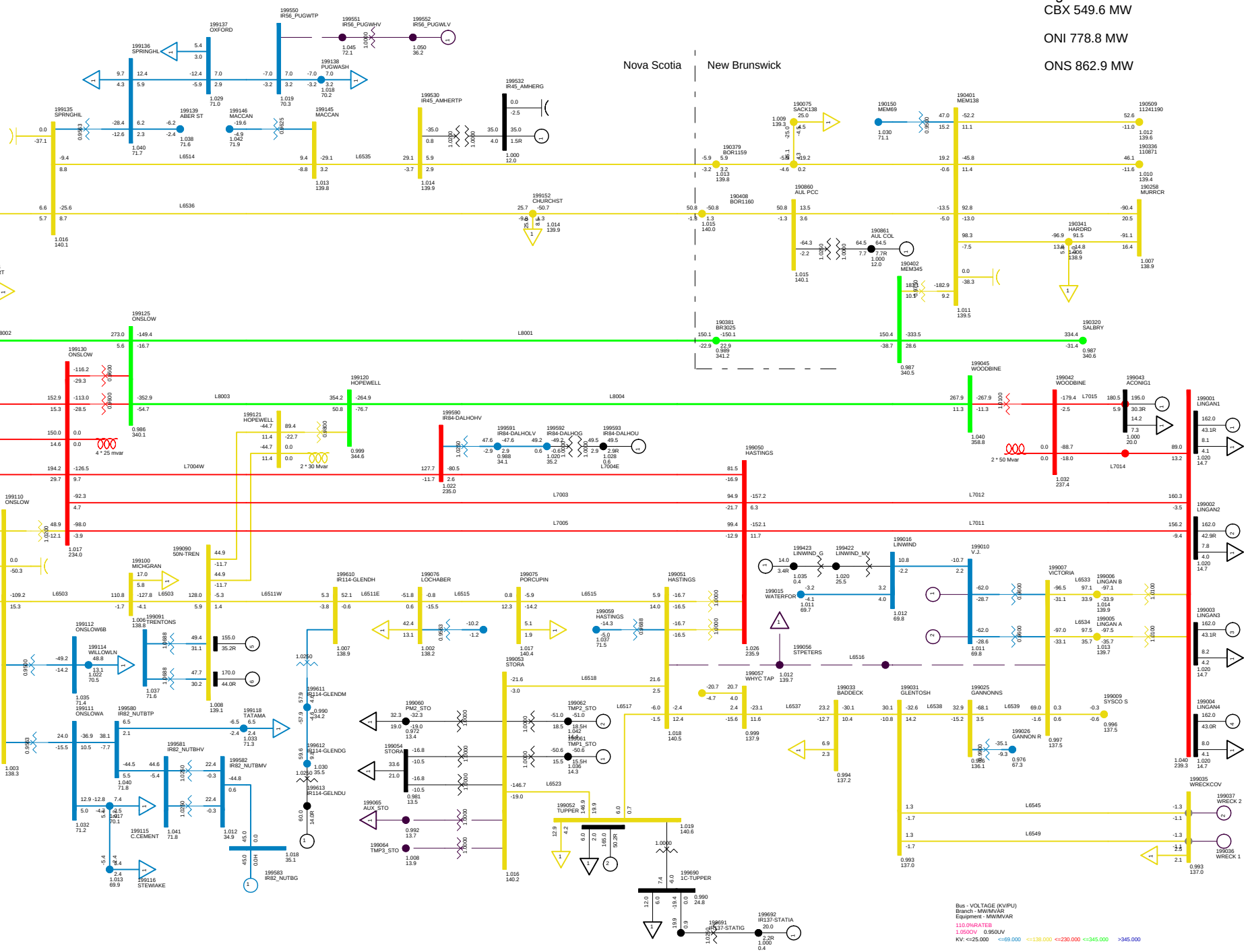

2013 WINTER PEAK NS IMPORT 200 MW
C21 LOSE L6516
NORTHEASTERN NS WED, DEC 10 2008 11:24

Total Wind Gen: 140.6 MW
Gross Lingan 648.0 MW
Gross Pt Aconi 195.0 MW

Gross Tupper 165.0 MW
Gross Trenton 325.0 MW
Gross Tuft's Cove 378.1 MW

Gross Wreck Cove 0.0 MW
Gross Gas Turbine 24.0 MW
Gross Small Hydro 182.4 MW

Net Stora Load 168.3 MW
Total BMPC Load 75.5 MW

Figure ___

NSX -200.1 MW

CBX 543.5 MW

ONI 772.9 MW

ONS 862.9 MW

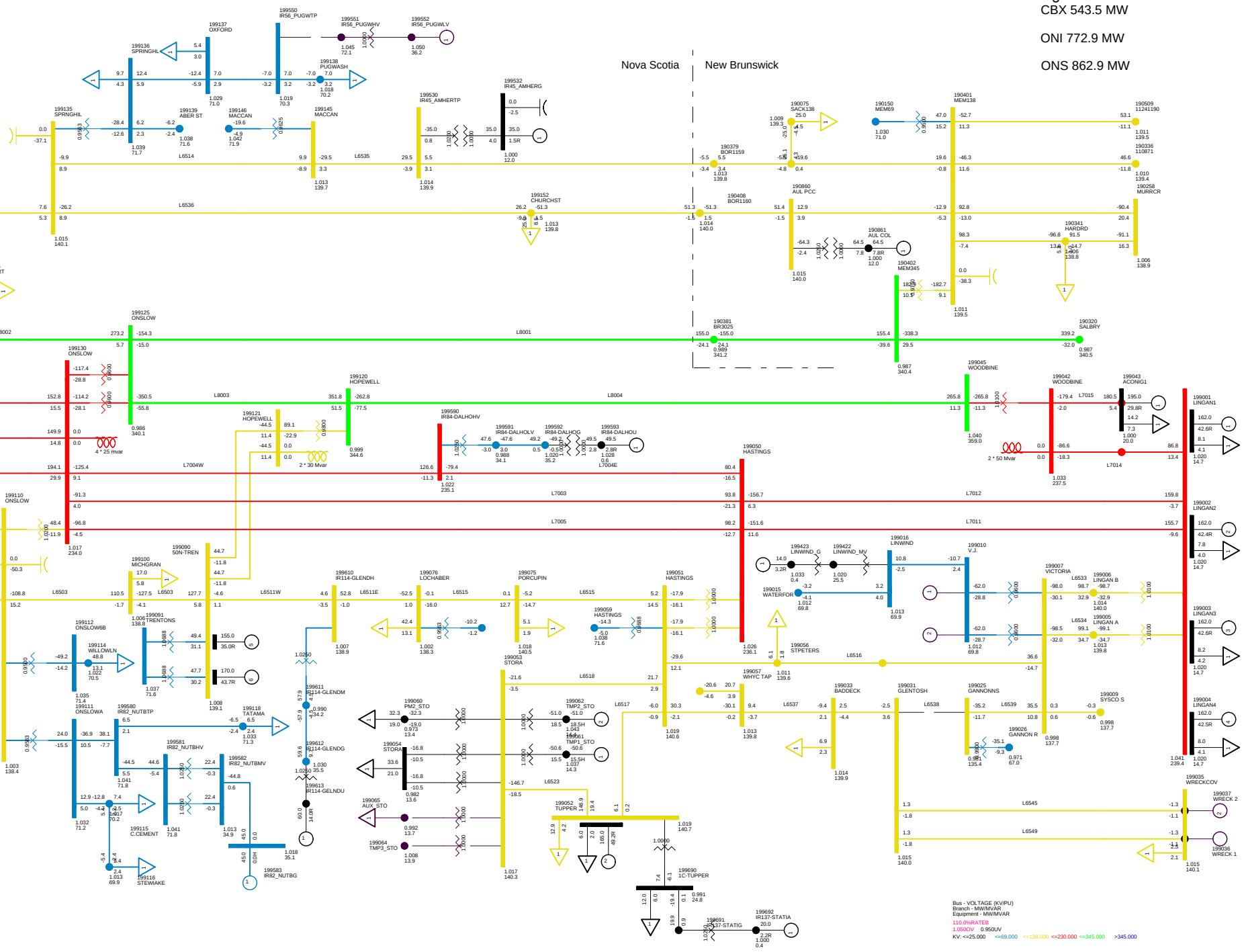

2013 WINTER PEAK NS IMPORT 200 MW
C22 LOSE L6538
NORTHEASTERN NS WED, DEC 10 2008 11:25

Total Wind Gen: 140.6 MW
Gross Lingan 648.0 MW
Gross Pt Aconi 195.0 MW

Gross Tupper 165.0 MW
Gross Trenton 325.0 MW
Gross Tuft's Cove 378.1 MW

Gross Wreck Cove 0.0 MW
Gross Gas Turbine 24.0 MW
Gross Small Hydro 182.4 MW

Net Stora Load 168.3 MW
Total BMPC Load 75.5 MW

Figure ___

Total Wind Gen: 140.6 MW | Gross Tupper 165.0 MW | Gross Wreck Cove 0.0 MW

Gross Lingan 648.0 MW | Gross Trenton 325.0 MW | Gross Gas Turbine 24.0 MW

Gross Pt Aconi 195.0 MW | Gross Tuft's Cove 378.1 MW | Gross Small Hydro 182.4 MW

Net Stora Load 168.3 MW | Total BMPC Load 75.5 MW

NSX -199.9 MW

CBX 543.8 MW

ONI 773.3 MW

ONS 862.9 MW

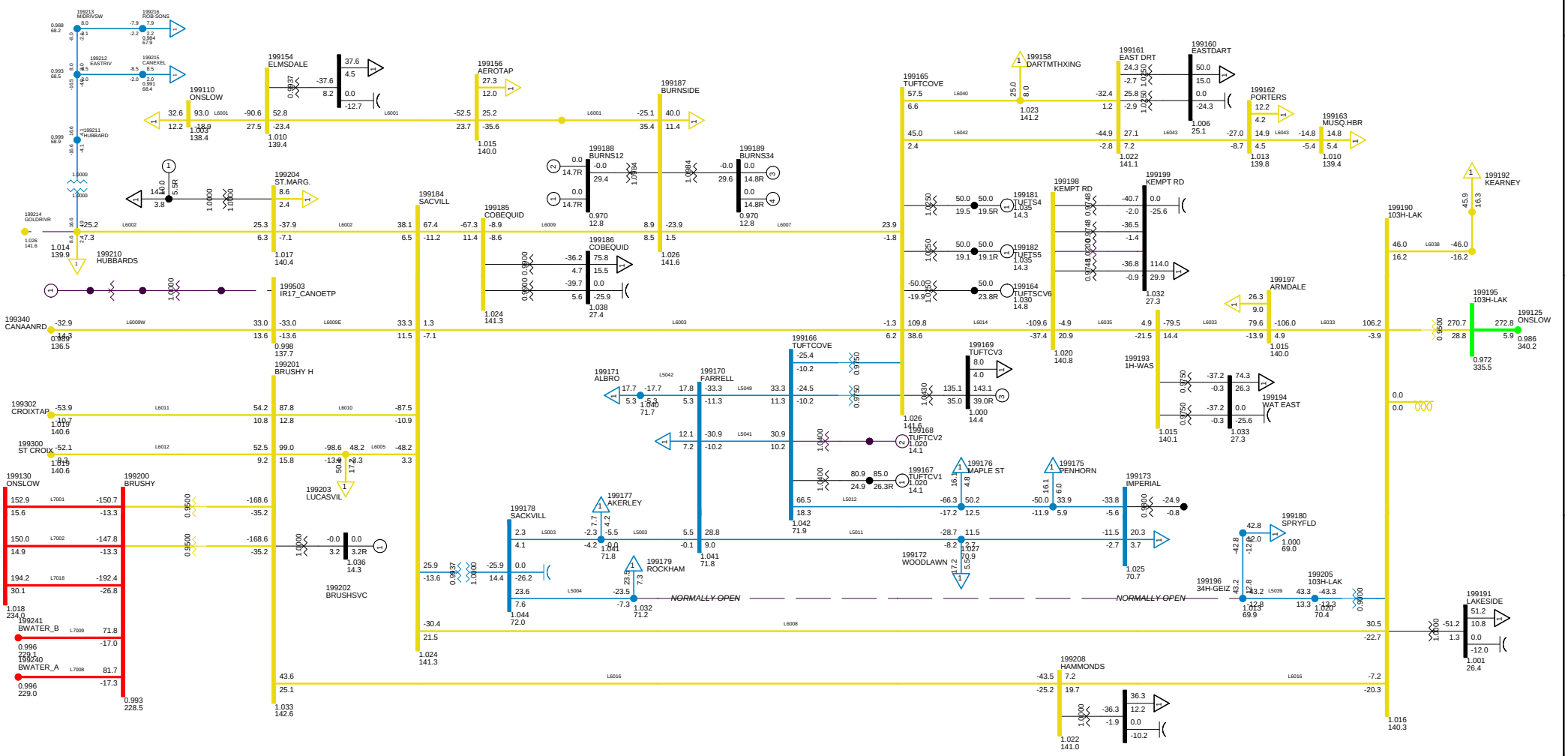

2013 WINTER PEAK STORA 167, NS LOAD 2371
NS-NB=-200; NB-NE=300; CBX=543; ONI=773 ONS=863
METRO ZONE WED, DEC 10 2008 11:25

Bus - VOLTAGE (KV/PU)
Branch - MW/MVAR
Equipment - MW/MVAR
100.0%RATE8
1.050OV 0.950UV
KV: <=30.000 <=69.000 <=138.000 <=230.000 <=345.000 >345.000

Figure __

Total Wind Gen: 140.6 MW | Gross Tupper 165.0 MW | Gross Wreck Cove 0.0 MW

Gross Lingan 648.0 MW | Gross Trenton 325.0 MW | Gross Gas Turbine 24.0 MW

Gross Pt Aconi 195.0 MW | Gross Tuft's Cove 378.1 MW | Gross Small Hydro 182.4 MW

Net Stora Load 168.3 MW | Total BMPC Load 75.5 MW

NSX -199.9 MW

CBX 543.8 MW

ONI 773.3 MW

ONS 862.9 MW

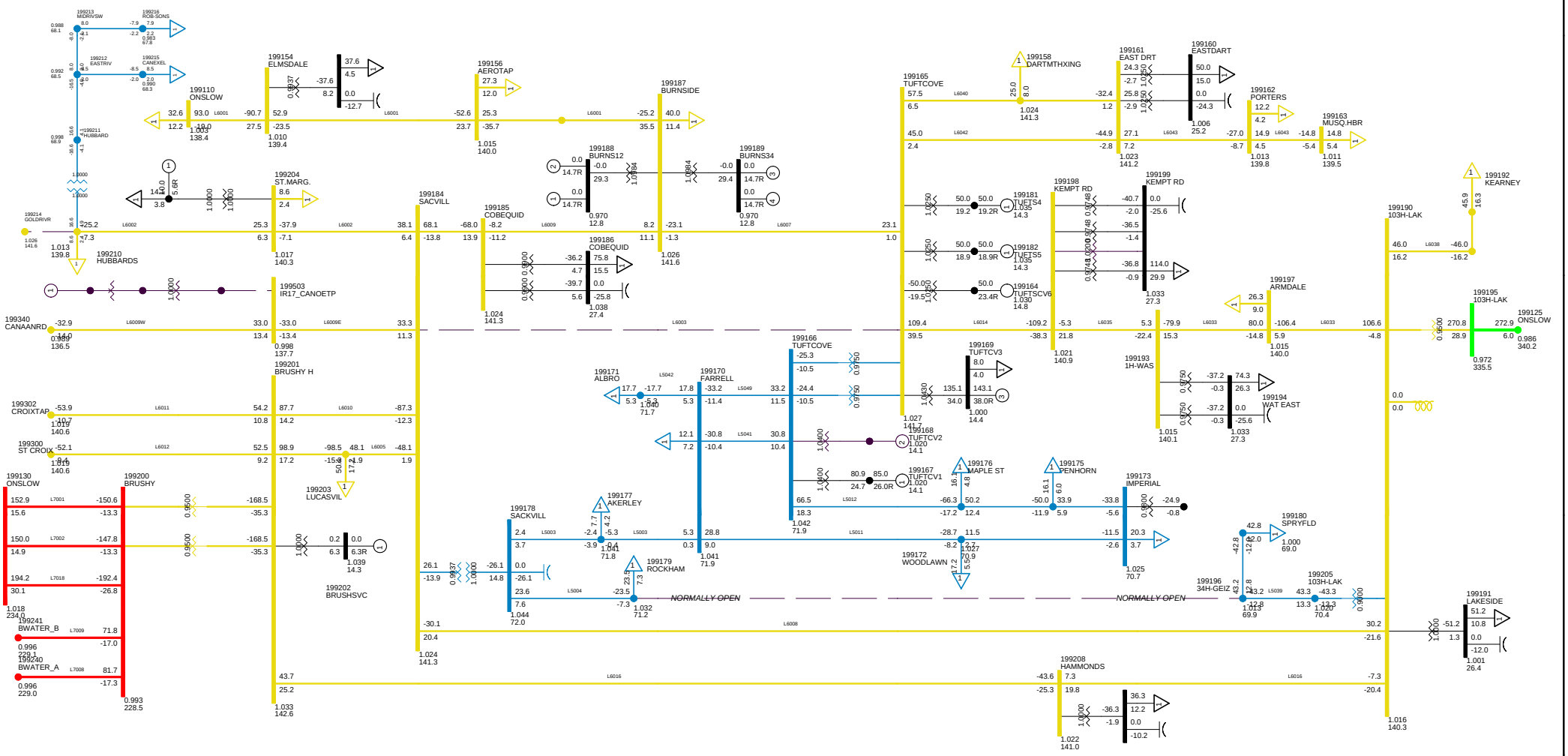

2013 WINTER PEAK NS IMPORT 200 MW
C23 LOSE L6003
METRO ZONE WED, DEC 10 2008 11:25

Bus - VOLTAGE (KV/PU)
Branch - MW/MVAR
Equipment - MW/MVAR
100.0%RATE8
1.050OV 0.950UV
KV: <=30.000 <=69.000 <=138.000 <=230.000 <=345.000 >345.000

Figure __

Total Wind Gen: 140.6 MW | Gross Tupper 165.0 MW | Gross Wreck Cove 0.0 MW

Gross Lingan 648.0 MW | Gross Trenton 325.0 MW | Gross Gas Turbine 24.0 MW

Gross Pt Aconi 195.0 MW | Gross Tuft's Cove 378.1 MW | Gross Small Hydro 182.4 MW

Net Stora Load 168.3 MW | Total BMPC Load 75.5 MW

NSX -147.9 MW

CBX 544.0 MW

ONI 773.5 MW

ONS 811.3 MW

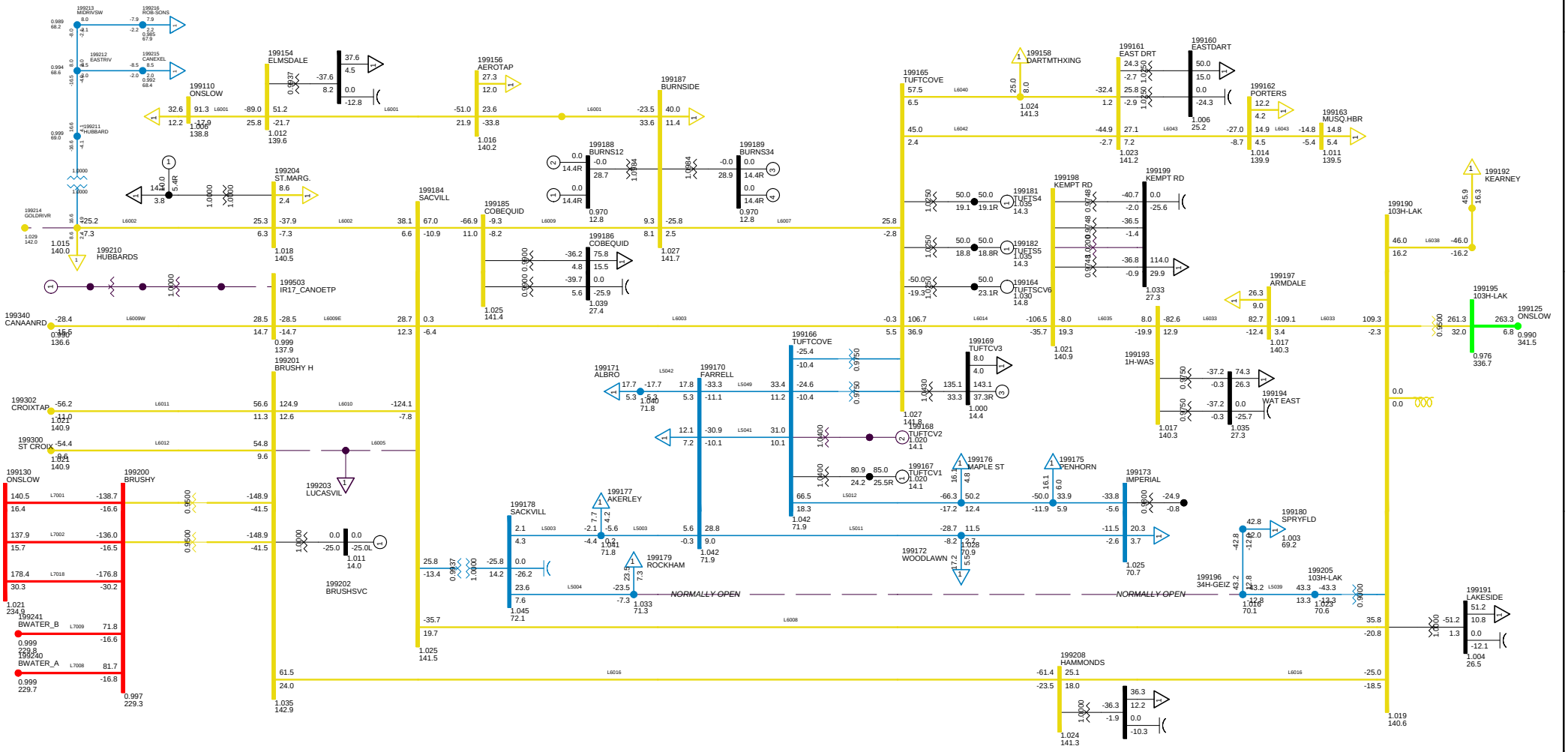

2013 WINTER PEAK NS IMPORT 200 MW
C24 LOSE L6005
METRO ZONE WED, DEC 10 2008 11:25

Bus - VOLTAGE (KV/PU)
Branch - MW/MVAR
Equipment - MW/MVAR
100.0%RATE8
1.050OV 0.950UV
KV: <=30.000 <=69.000 <=138.000 <=230.000 <=345.000 >345.000

Figure __

Total Wind Gen: 140.6 MW
Gross Tupper 165.0 MW
Gross Wreck Cove 0.0 MW
Gross Lingan 648.0 MW
Gross Trenton 325.0 MW
Gross Gas Turbine 24.0 MW
Gross Pt Aconi 195.0 MW
Gross Tuft's Cove 378.1 MW
Gross Small Hydro 182.4 MW
Net Stora Load 168.3 MW
Total BMPC Load 75.5 MW

NSX -200.0 MW
CBX 543.8 MW
ONI 773.2 MW
ONS 863.0 MW

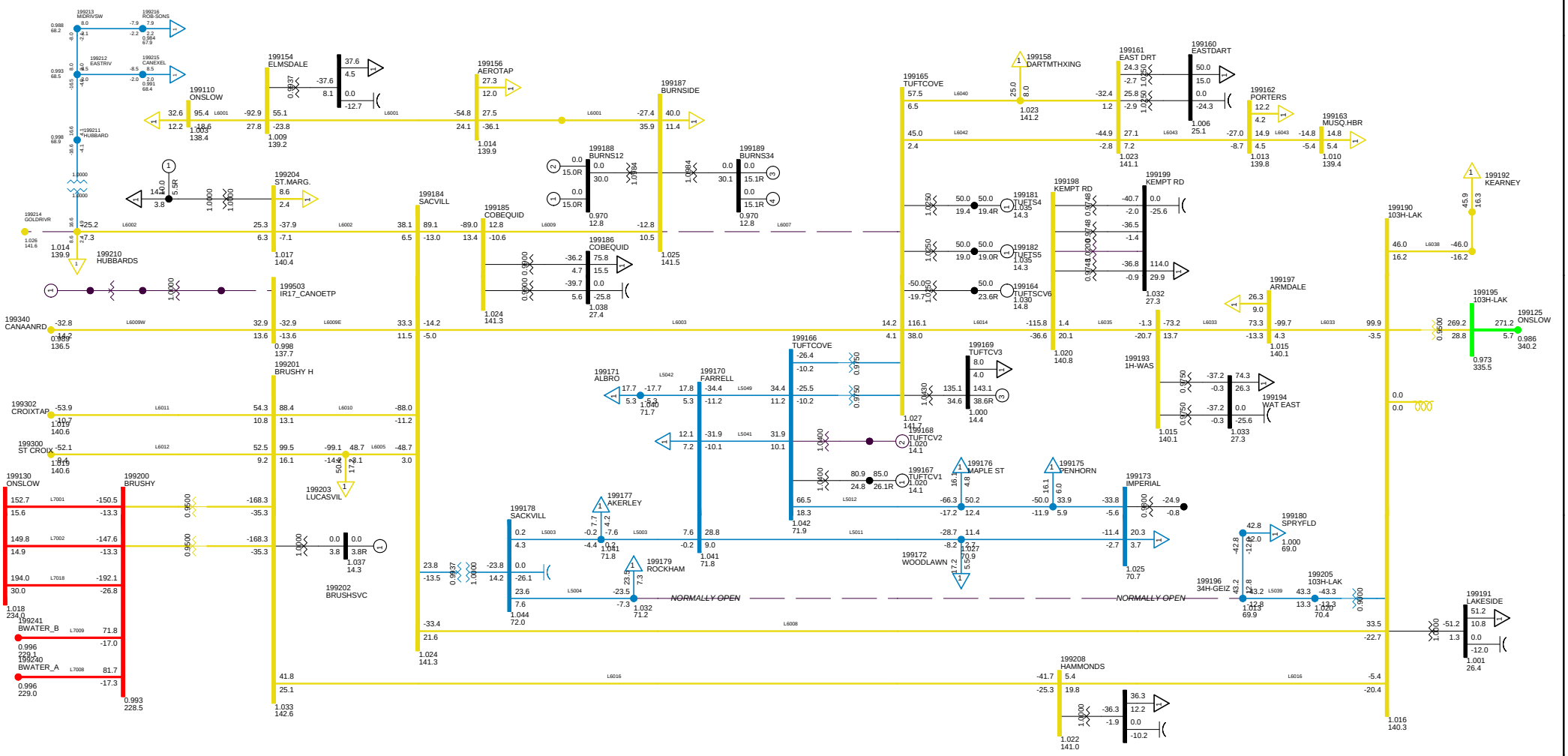

2013 WINTER PEAK NS IMPORT 200 MW
C25 LOSE L6007
METRO ZONE WED, DEC 10 2008 11:25

Bus - VOLTAGE (KV/PU)
Branch - MW/MVAR
Equipment - MW/MVAR
100.0%RATE8
1.050OV 0.950UV
KV: <=30.000 <=69.000 <=138.000 <=230.000 <=345.000 >345.000

Figure __

Total Wind Gen: 140.6 MW
Gross Tupper 165.0 MW
Gross Wreck Cove 0.0 MW
Gross Lingan 648.0 MW
Gross Trenton 325.0 MW
Gross Gas Turbine 24.0 MW
Gross Pt Aconi 195.0 MW
Gross Tuft's Cove 378.1 MW
Gross Small Hydro 182.4 MW
Net Stora Load 168.3 MW
Total BMPC Load 75.5 MW

NSX -200.2 MW
CBX 543.8 MW
ONI 773.2 MW
ONS 863.2 MW

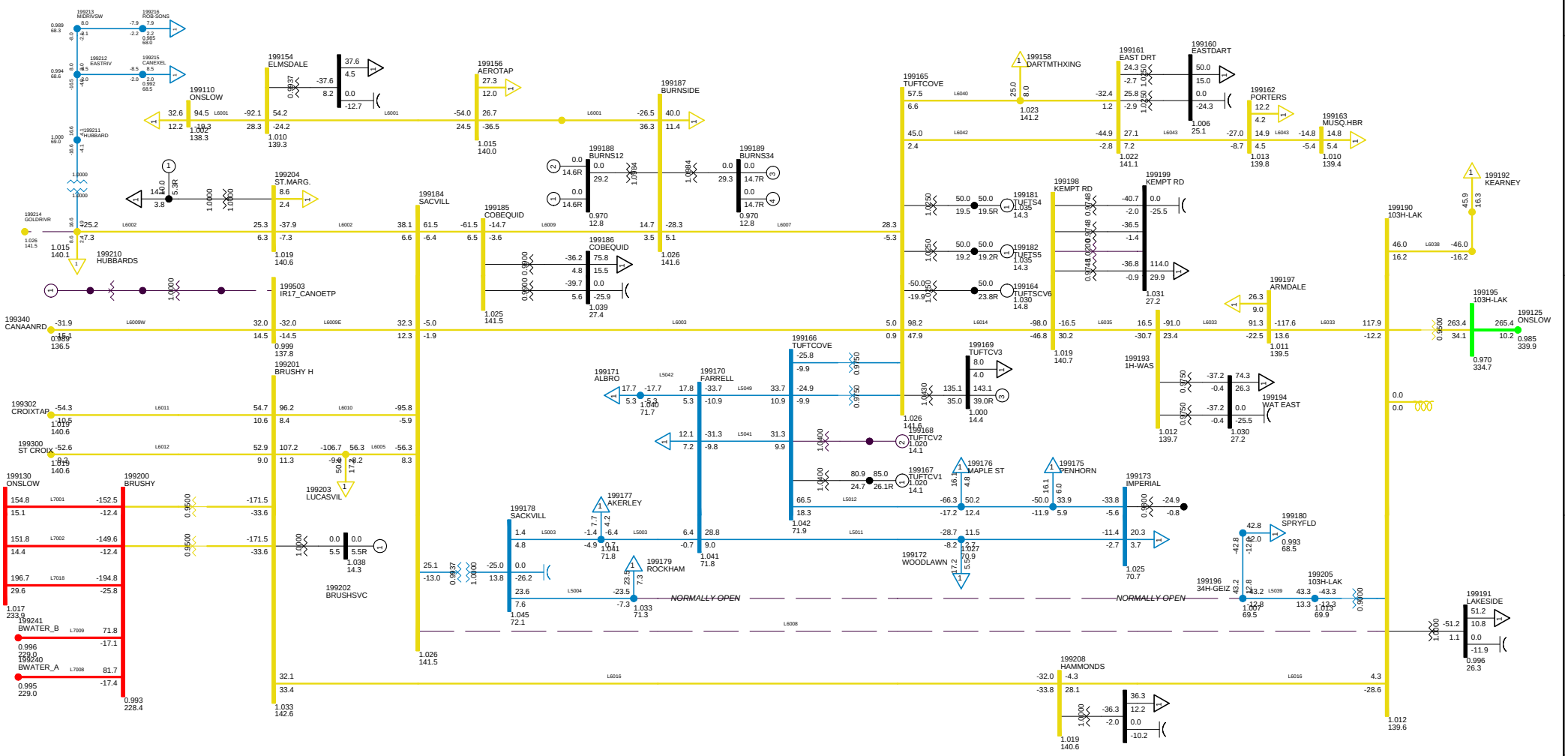

2013 WINTER PEAK NS IMPORT 200 MW
C26 LOSE L6008
METRO ZONE WED, DEC 10 2008 11:25

Bus - VOLTAGE (KV/PU)
Branch - MW/MVAR
Equipment - MW/MVAR
100.0%RATE8
1.050OV 0.950UV
KV: <=30.000 <=69.000 <=138.000 <=230.000 <=345.000 >345.000

Figure __

Total Wind Gen: 140.6 MW
Gross Tupper 165.0 MW
Gross Wreck Cove 0.0 MW
Gross Lingan 648.0 MW
Gross Trenton 325.0 MW
Gross Gas Turbine 24.0 MW
Gross Pt Aconi 195.0 MW
Gross Tuft's Cove 378.1 MW
Gross Small Hydro 182.4 MW
Net Stora Load 168.3 MW
Total BMPC Load 75.5 MW

NSX -162.5 MW
CBX 543.9 MW
ONI 773.4 MW
ONS 825.7 MW

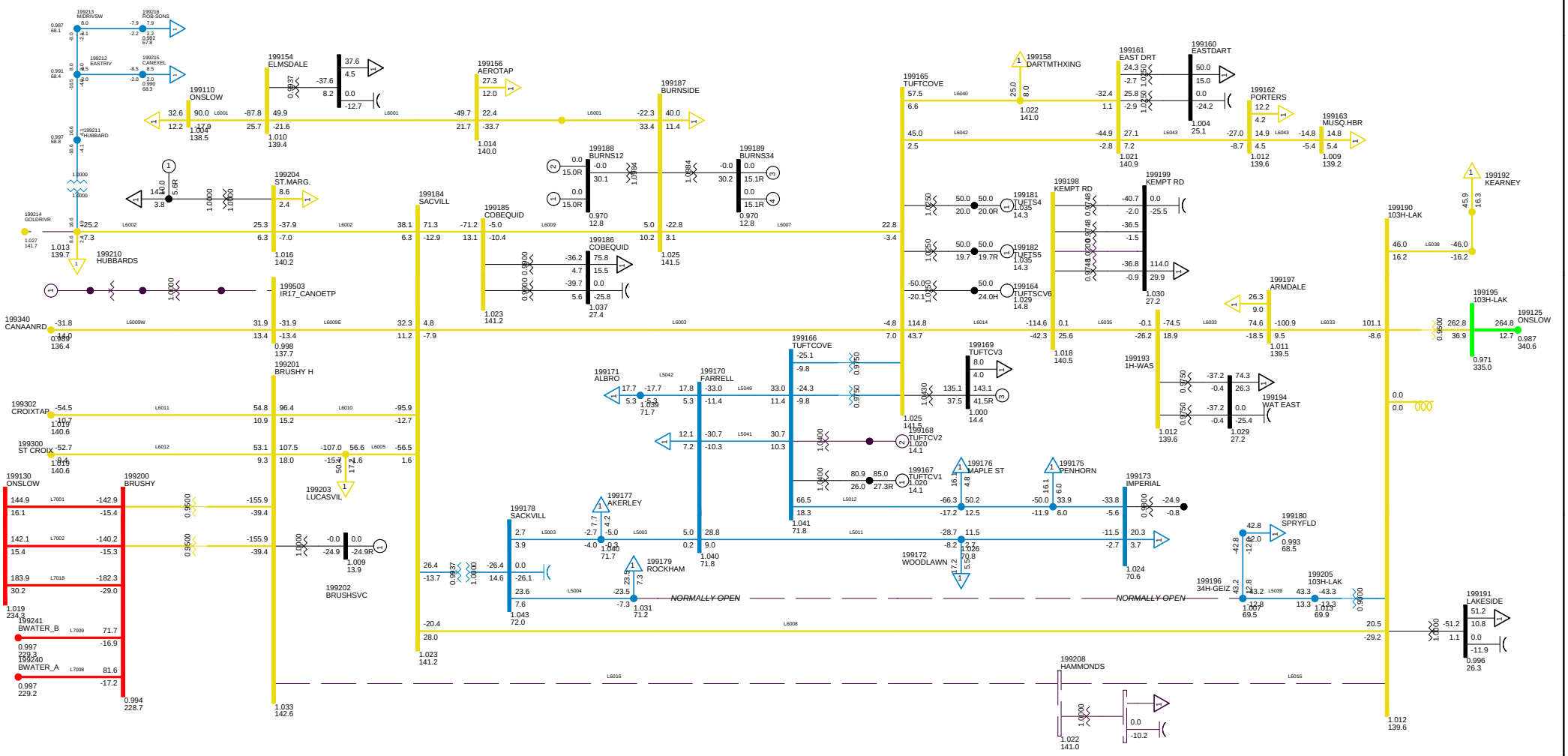

2013 WINTER PEAK NS IMPORT 200 MW
C27 LOSE L6009
METRO ZONE WED, DEC 10 2008 11:25

Bus - VOLTAGE (KV/PU)
Branch - MW/MVAR
Equipment - MW/MVAR
100.0%RATE8
1.050OV 0.950UV
KV: <=30.000 <=69.000 <=138.000 <=230.000 <=345.000 >345.000

Figure __

Total Wind Gen: 140.6 MW
Gross Tupper 165.0 MW
Gross Wreck Cove 0.0 MW
Gross Lingan 648.0 MW
Gross Trenton 325.0 MW
Gross Gas Turbine 24.0 MW
Gross Pt Aconi 195.0 MW
Gross Tuft's Cove 378.1 MW
Gross Small Hydro 182.4 MW
Net Stora Load 168.3 MW
Total BMPC Load 75.5 MW

NSX -200.6 MW
CBX 543.8 MW
ONI 773.2 MW
ONS 863.6 MW

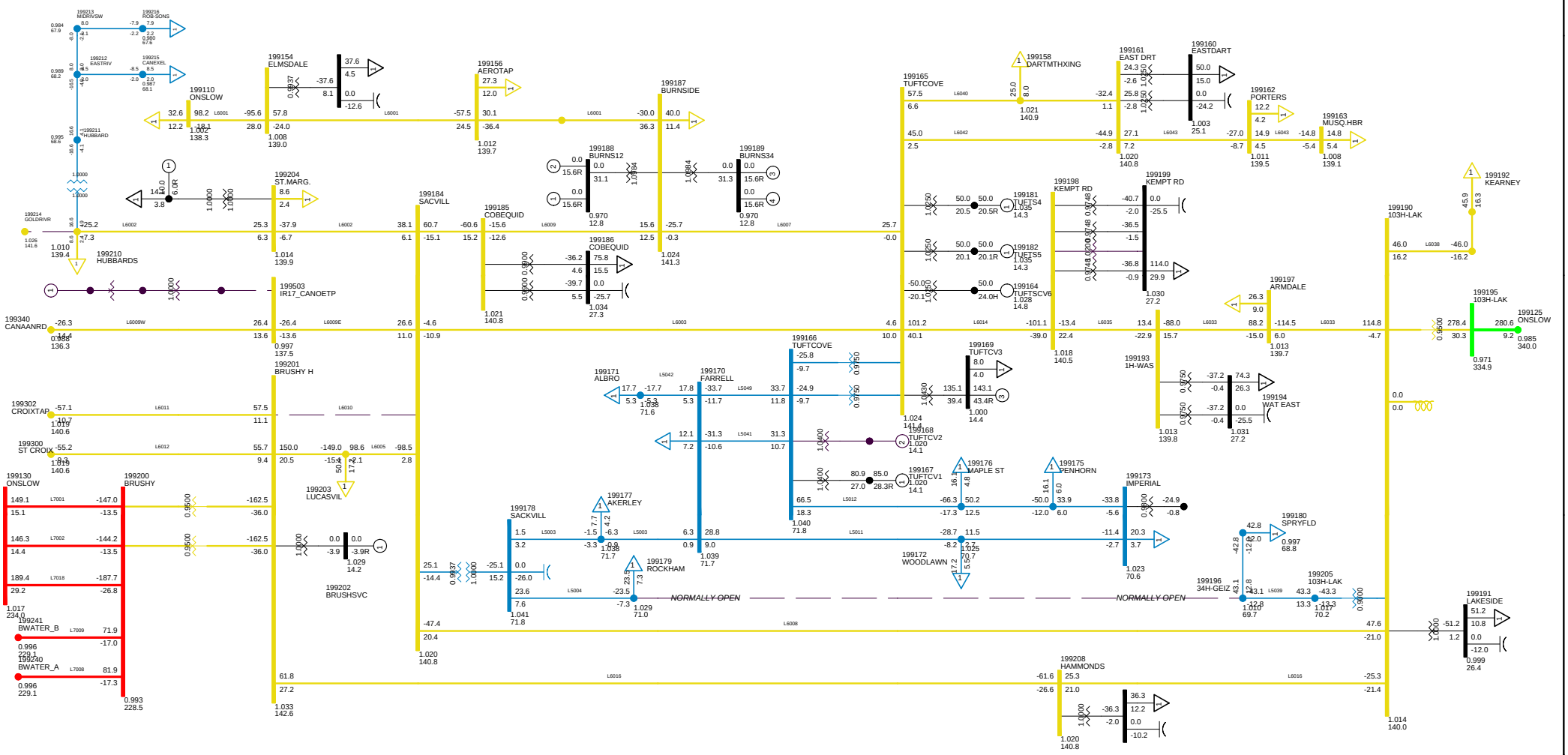

2013 WINTER PEAK NS IMPORT 200 MW
C28 LOSE L6010
METRO ZONE WED, DEC 10 2008 11:25

Bus - VOLTAGE (KV/PU)
Branch - MW/MVAR
Equipment - MW/MVAR
100.0%RATE8
1.050OV 0.950UV
KV: <=30.000 <=69.000 <=138.000 <=230.000 <=345.000 >345.000

Figure __

Total Wind Gen: 140.6 MW
Gross Tupper 165.0 MW
Gross Wreck Cove 0.0 MW
Gross Lingan 648.0 MW
Gross Trenton 325.0 MW
Gross Gas Turbine 24.0 MW
Gross Pt Aconi 195.0 MW
Gross Tuft's Cove 378.1 MW
Gross Small Hydro 182.4 MW
Net Stora Load 168.3 MW
Total BMPC Load 75.5 MW

NSX -202.3 MW
CBX 543.8 MW
ONI 773.2 MW
ONS 865.3 MW

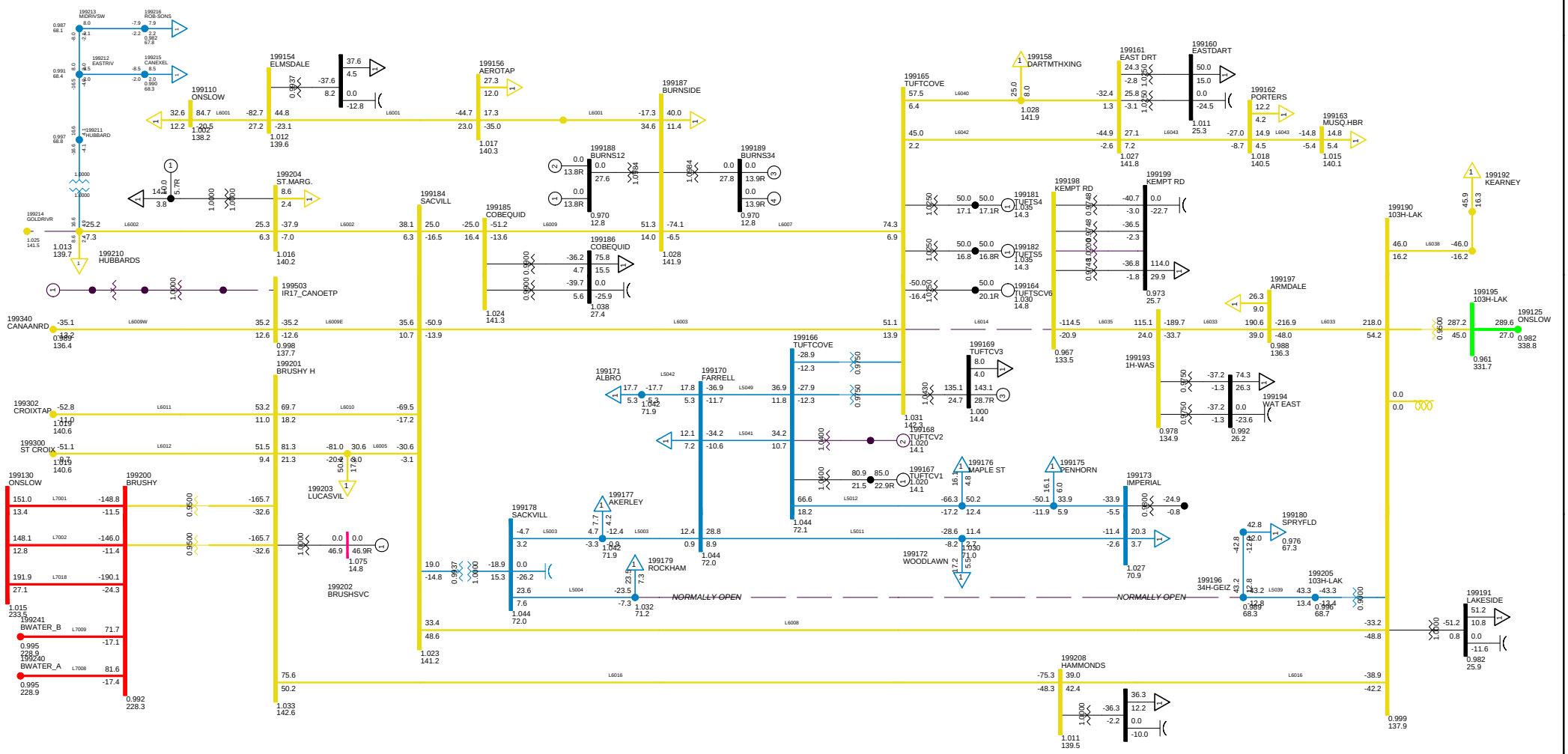

2013 WINTER PEAK NS IMPORT 200 MW
C29 LOSE L6014
METRO ZONE WED, DEC 10 2008 11:25

Bus - VOLTAGE (KV/PU)
Branch - MW/MVAR
Equipment - MW/MVAR
100.0%RATE8
1.050OV 0.950UV
KV: <=30.000 <=69.000 <=138.000 <=230.000 <=345.000 >345.000

Figure __

Total Wind Gen: 140.6 MW
Gross Tupper 165.0 MW
Gross Wreck Cove 0.0 MW
Gross Lingan 648.0 MW
Gross Trenton 325.0 MW
Gross Gas Turbine 24.0 MW
Gross Pt Aconi 195.0 MW
Gross Tuft's Cove 378.1 MW
Gross Small Hydro 182.4 MW
Net Stora Load 168.3 MW
Total BMPC Load 75.5 MW

NSX -162.5 MW
CBX 543.9 MW
ONI 773.4 MW
ONS 825.7 MW

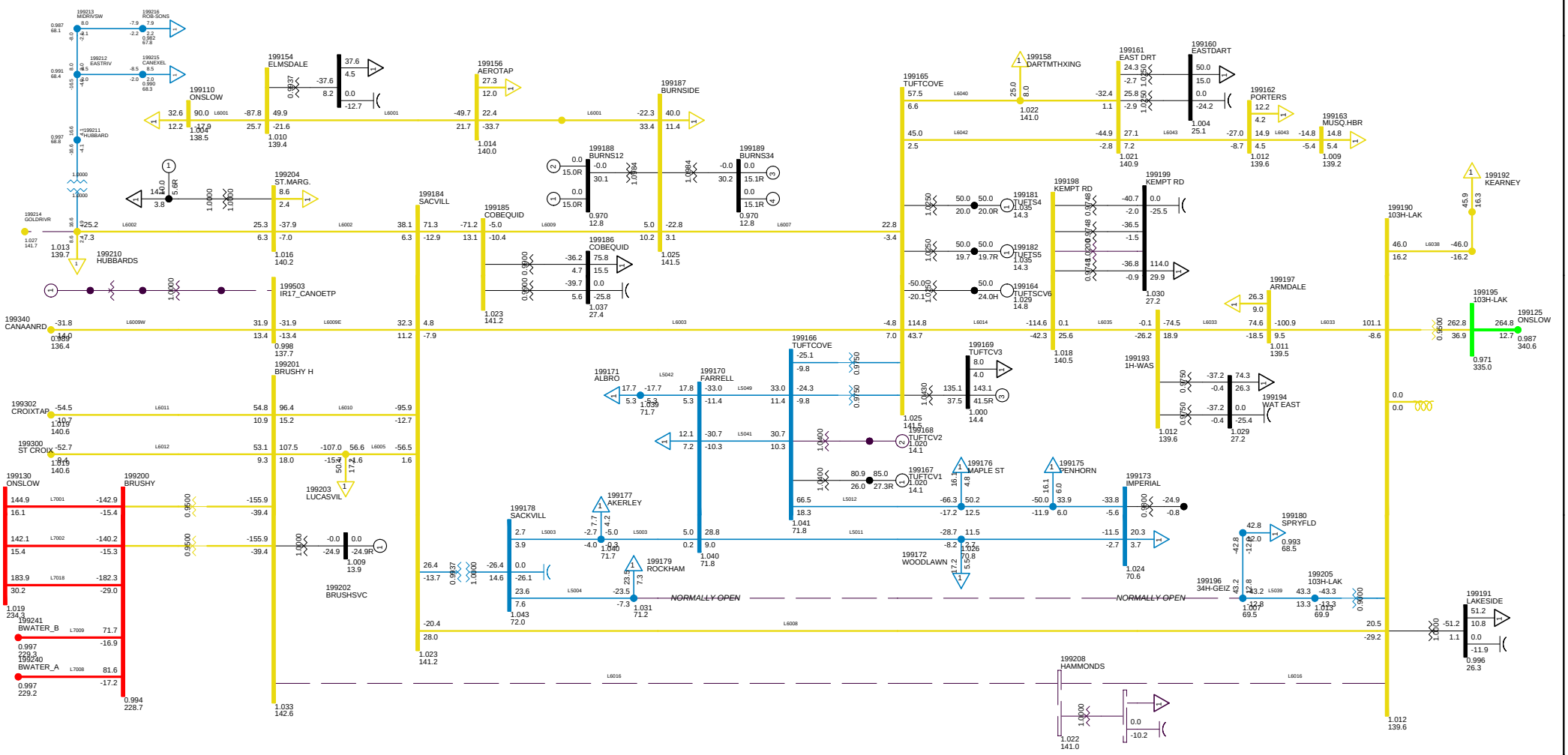

2013 WINTER PEAK NS IMPORT 200 MW
C30 LOSE L6016
METRO ZONE WED, DEC 10 2008 11:25

Bus - VOLTAGE (KV/PU)
Branch - MW/MVAR
Equipment - MW/MVAR
100.0%RATE8
1.050OV 0.950UV
KV: <=30.000 <=69.000 <=138.000 <=230.000 <=345.000 >345.000

Figure __

Total Wind Gen: 140.6 MW
Gross Tupper 165.0 MW
Gross Wreck Cove 0.0 MW
Gross Lingan 648.0 MW
Gross Trenton 325.0 MW
Gross Gas Turbine 24.0 MW
Gross Pt Aconi 195.0 MW
Gross Tuft's Cove 378.1 MW
Gross Small Hydro 182.4 MW
Net Stora Load 168.3 MW
Total BMPC Load 75.5 MW

NSX -136.7 MW
CBX 543.9 MW
ONI 773.4 MW
ONS 800.0 MW

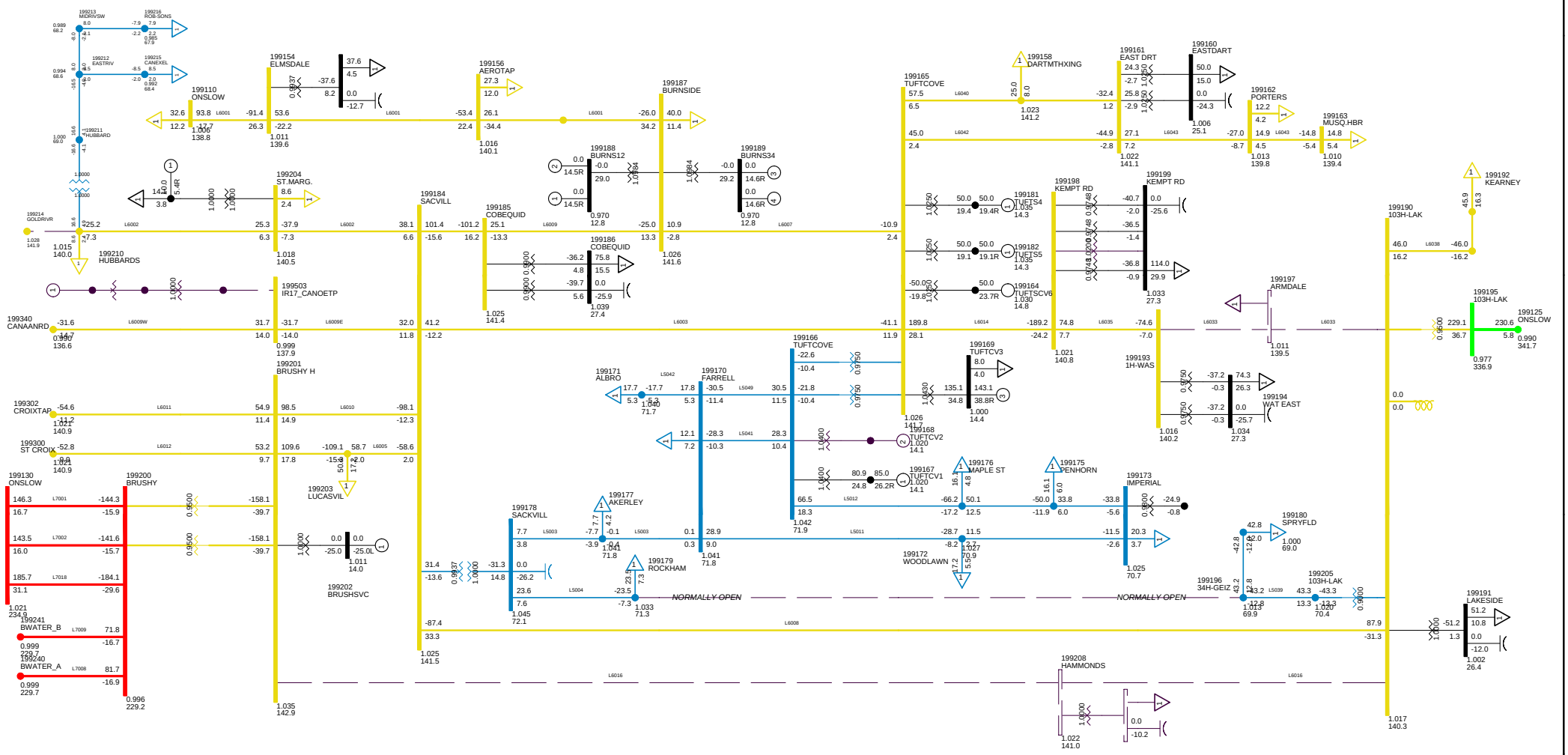

2013 WINTER PEAK NS IMPORT 200 MW
C31 LOSE L6033
METRO ZONE WED, DEC 10 2008 11:26

Bus - VOLTAGE (KV/PU)
Branch - MW/MVAR
Equipment - MW/MVAR
100.0%RATE8
1.050OV 0.950UV
KV: <=30.000 <=69.000 <=138.000 <=230.000 <=345.000 >345.000

Figure __

Total Wind Gen: 140.6 MW
Gross Tupper 165.0 MW
Gross Wreck Cove 0.0 MW
Gross Lingan 648.0 MW
Gross Trenton 325.0 MW
Gross Gas Turbine 24.0 MW
Gross Pt Aconi 195.0 MW
Gross Tuft's Cove 378.1 MW
Gross Small Hydro 182.4 MW
Net Stora Load 168.3 MW
Total BMPC Load 75.5 MW

NSX -200.0 MW
CBX 543.8 MW
ONI 773.2 MW
ONS 863.0 MW

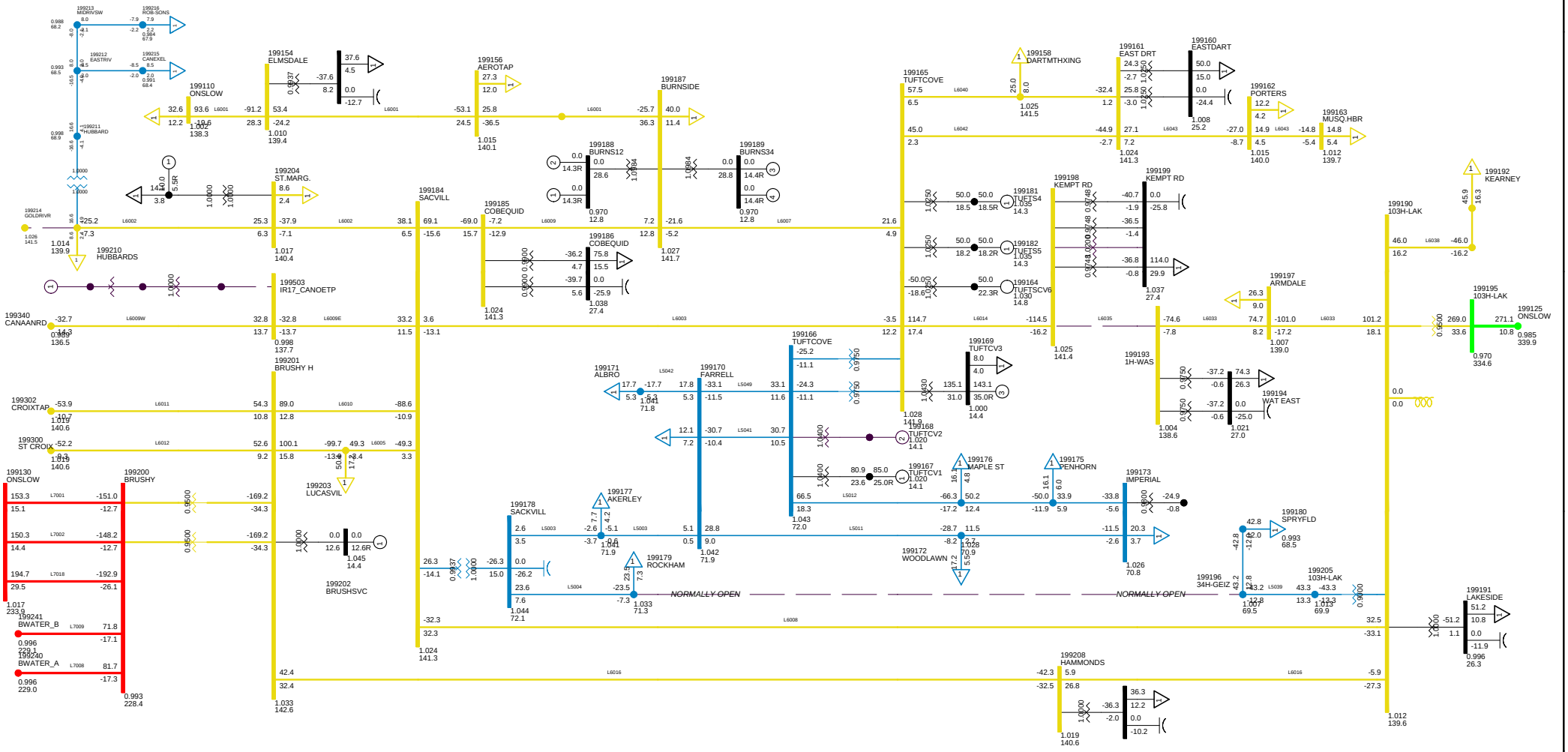

2013 WINTER PEAK NS IMPORT 200 MW
C32 LOSE L6035
METRO ZONE WED, DEC 10 2008 11:26

Bus - VOLTAGE (KV/PU)
Branch - MW/MVAR
Equipment - MW/MVAR
100.0%RATE8
1.050OV 0.950UV
KV: <=30.000 <=69.000 <=138.000 <=230.000 <=345.000 >345.000

Figure __

Total Wind Gen: 140.6 MW
Gross Tupper 165.0 MW
Gross Wreck Cove 0.0 MW
Gross Lingan 648.0 MW
Gross Trenton 325.0 MW
Gross Gas Turbine 24.0 MW
Gross Pt Aconi 195.0 MW
Gross Tuft's Cove 378.1 MW
Gross Small Hydro 182.4 MW
Net Stora Load 168.3 MW
Total BMPC Load 75.5 MW

NSX -167.4 MW
CBX 543.5 MW
ONI 772.4 MW
ONS 829.2 MW

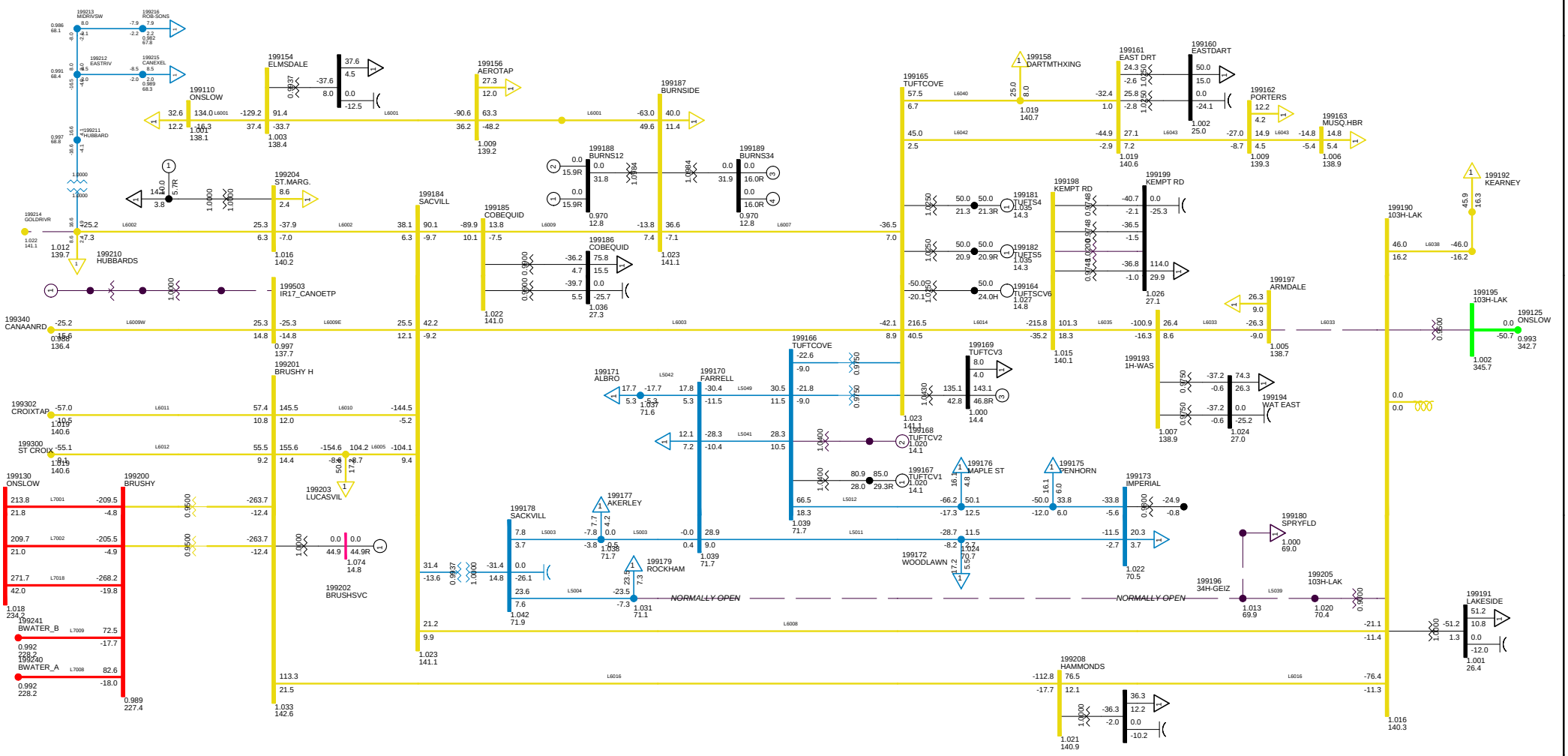

2013 WINTER PEAK NS IMPORT 200 MW
C33 LOSE 103H-B61
METRO ZONE WED, DEC 10 2008 11:26

Bus - VOLTAGE (KV/PU)
Branch - MW/MVAR
Equipment - MW/MVAR
100.0%RATE8
1.050OV 0.950UV
KV: <=30.000 <=69.000 <=138.000 <=230.000 <=345.000

Figure __

Total Wind Gen: 140.6 MW | Gross Tupper 165.0 MW | Gross Wreck Cove 0.0 MW

Gross Lingan 648.0 MW | Gross Trenton 325.0 MW | Gross Gas Turbine 24.0 MW

Gross Pt Aconi 195.0 MW | Gross Tuft's Cove 328.1 MW | Gross Small Hydro 182.4 MW

Net Stora Load 168.3 MW | Total BMPC Load 75.5 MW

NSX -213.6 MW

CBX 543.4 MW

ONI 772.3 MW

ONS 875.3 MW

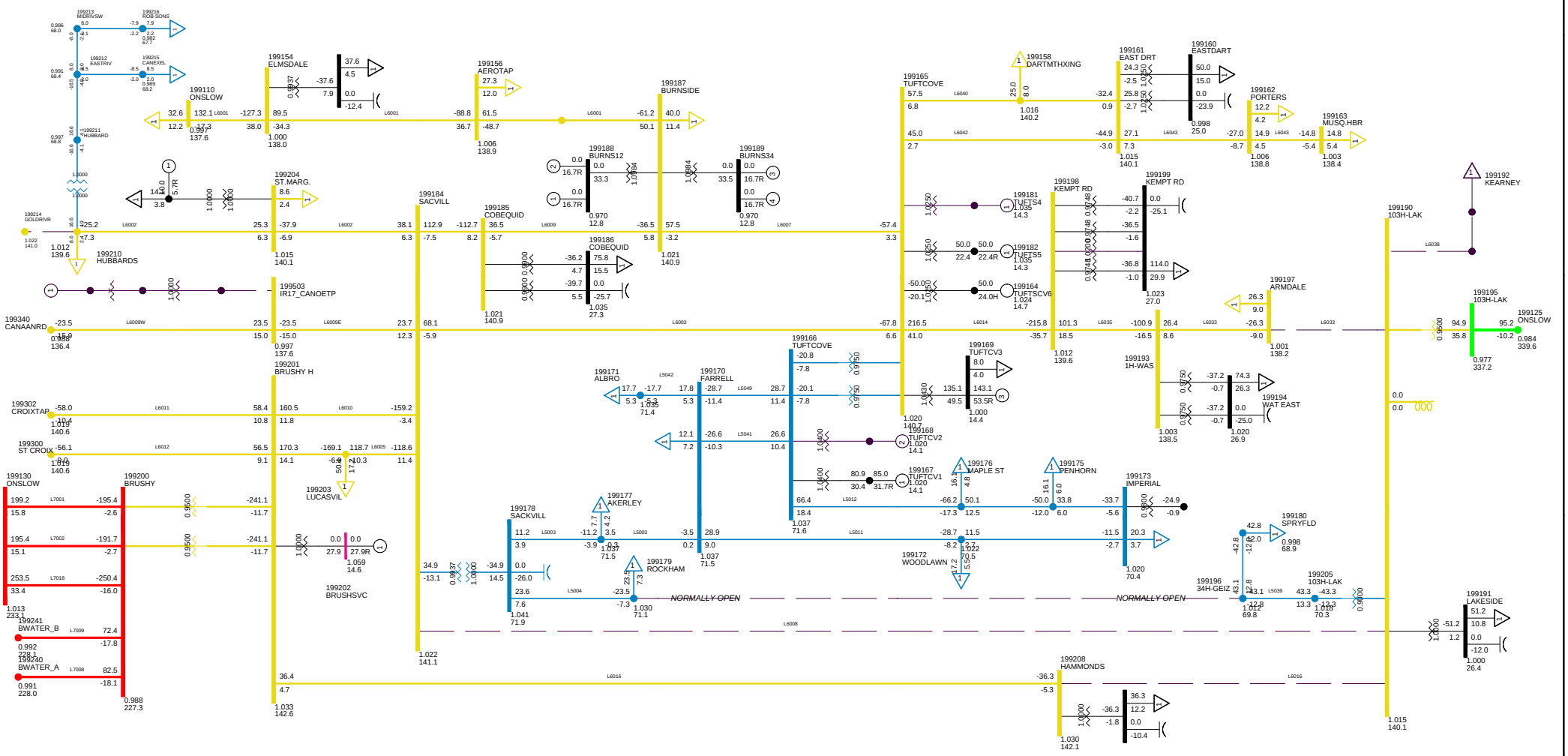

2013 WINTER PEAK NS IMPORT 200 MW
C34 LOSE 103H-B62
METRO ZONE WED, DEC 10 2008 11:26

Bus - VOLTAGE (KV/PU)
Branch - MW/MVAR
Equipment - MW/MVAR
100.0%RATE8
1.050OV 0.950UV
KV: <=30.000 <=69.000 <=138.000 <=230.000 <=345.000

Figure __

Total Wind Gen: 140.6 MW | Gross Tupper 165.0 MW | Gross Wreck Cove 0.0 MW

Gross Lingan 648.0 MW | Gross Trenton 325.0 MW | Gross Gas Turbine 24.0 MW

Gross Pt Aconi 195.0 MW | Gross Tuft's Cove 378.1 MW | Gross Small Hydro 182.4 MW

Net Stora Load 168.3 MW | Total BMPC Load 75.5 MW

NSX -199.9 MW

CBX 543.8 MW

ONI 773.3 MW

ONS 862.9 MW

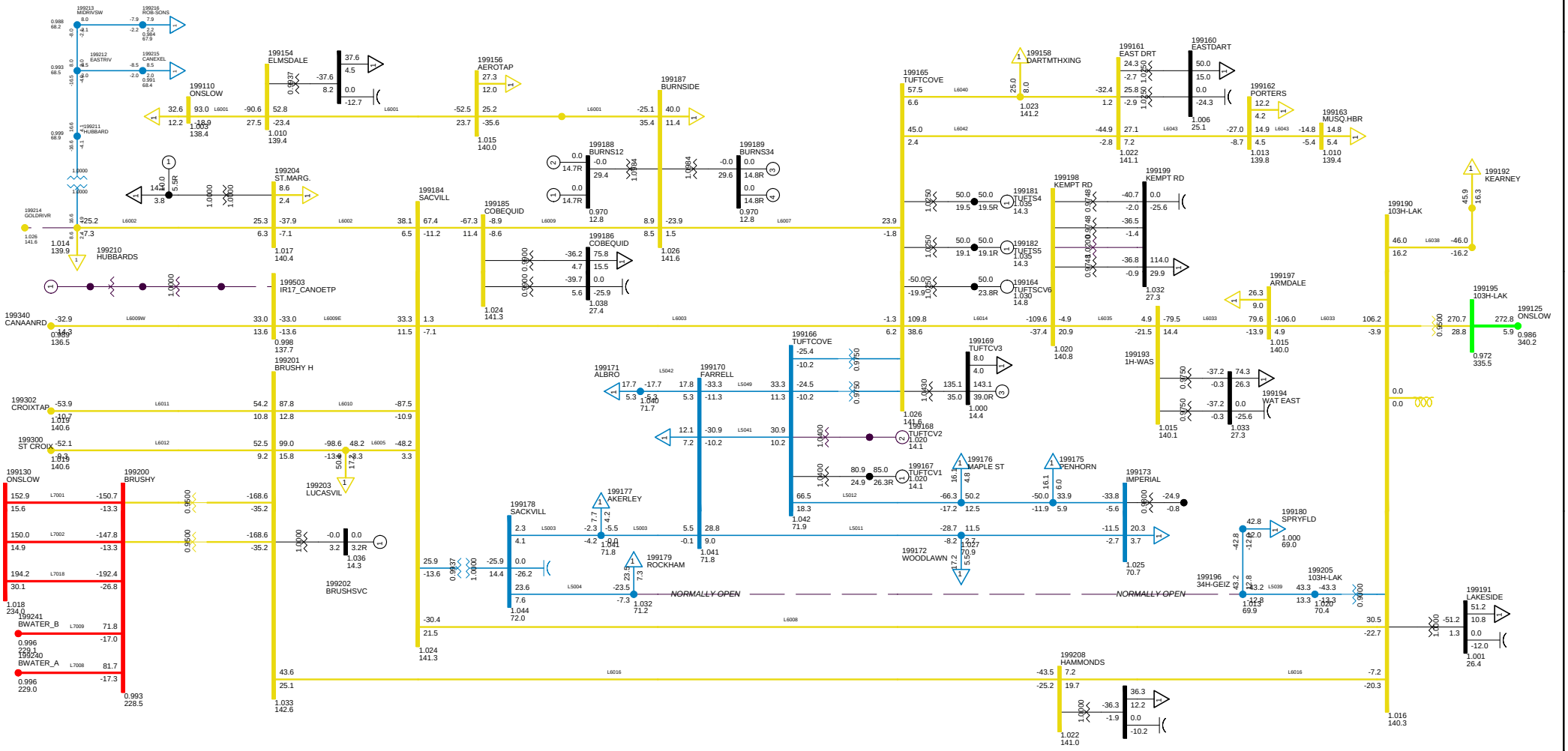

2013 WINTER PEAK STORA 167, NS LOAD 2371
NS-NB=-200; NB-NE=300; CBX=543; ONI=773 ONS=863
METRO ZONE WED, DEC 10 2008 11:26

Bus - VOLTAGE (KV/PU)
Branch - MW/MVAR
Equipment - MW/MVAR
100.0%RATE8
1.050OV 0.950UV
KV: <=30.000 <=69.000 <=138.000 <=230.000 <=345.000 >345.000

Figure __

Total Wind Gen: 140.6 MW
Gross Tupper 165.0 MW
Gross Wreck Cove 0.0 MW
Gross Lingan 648.0 MW
Gross Trenton 325.0 MW
Gross Gas Turbine 24.0 MW
Gross Pt Aconi 195.0 MW
Gross Tuft's Cove 378.1 MW
Gross Small Hydro 182.4 MW
Net Stora Load 168.3 MW
Total BMPC Load 75.5 MW

NSX -149.6 MW
CBX 544.0 MW
ONI 773.6 MW
ONS 813.1 MW

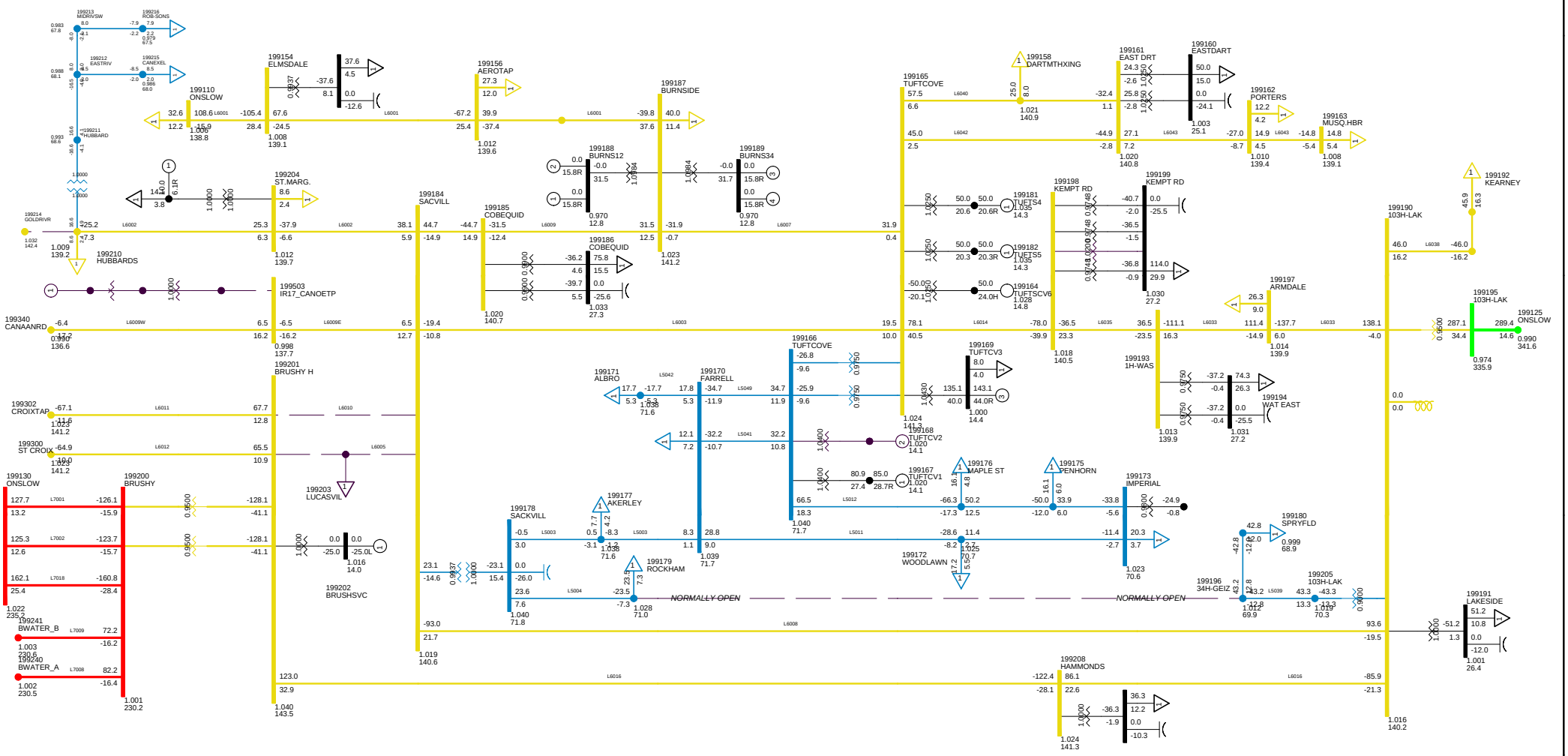

2013 WINTER PEAK NS IMPORT 200 MW
C35 DCT L6005+L6010
METRO ZONE WED, DEC 10 2008 11:26

Bus - VOLTAGE (KV/PU)
Branch - MW/MVAR
Equipment - MW/MVAR
100.0%RATE8
1.050OV 0.950UV
KV: <=30.000 <=69.000 <=138.000 <=230.000 <=345.000

Figure __

Total Wind Gen: 140.6 MW | Gross Tupper 165.0 MW | Gross Wreck Cove 0.0 MW

Gross Lingan 648.0 MW | Gross Trenton 325.0 MW | Gross Gas Turbine 24.0 MW

Gross Pt Aconi 195.0 MW | Gross Tuft's Cove 378.1 MW | Gross Small Hydro 182.4 MW

Net Stora Load 168.3 MW | Total BMPC Load 75.5 MW

NSX -147.9 MW

CBX 544.0 MW

ONI 773.5 MW

ONS 811.3 MW

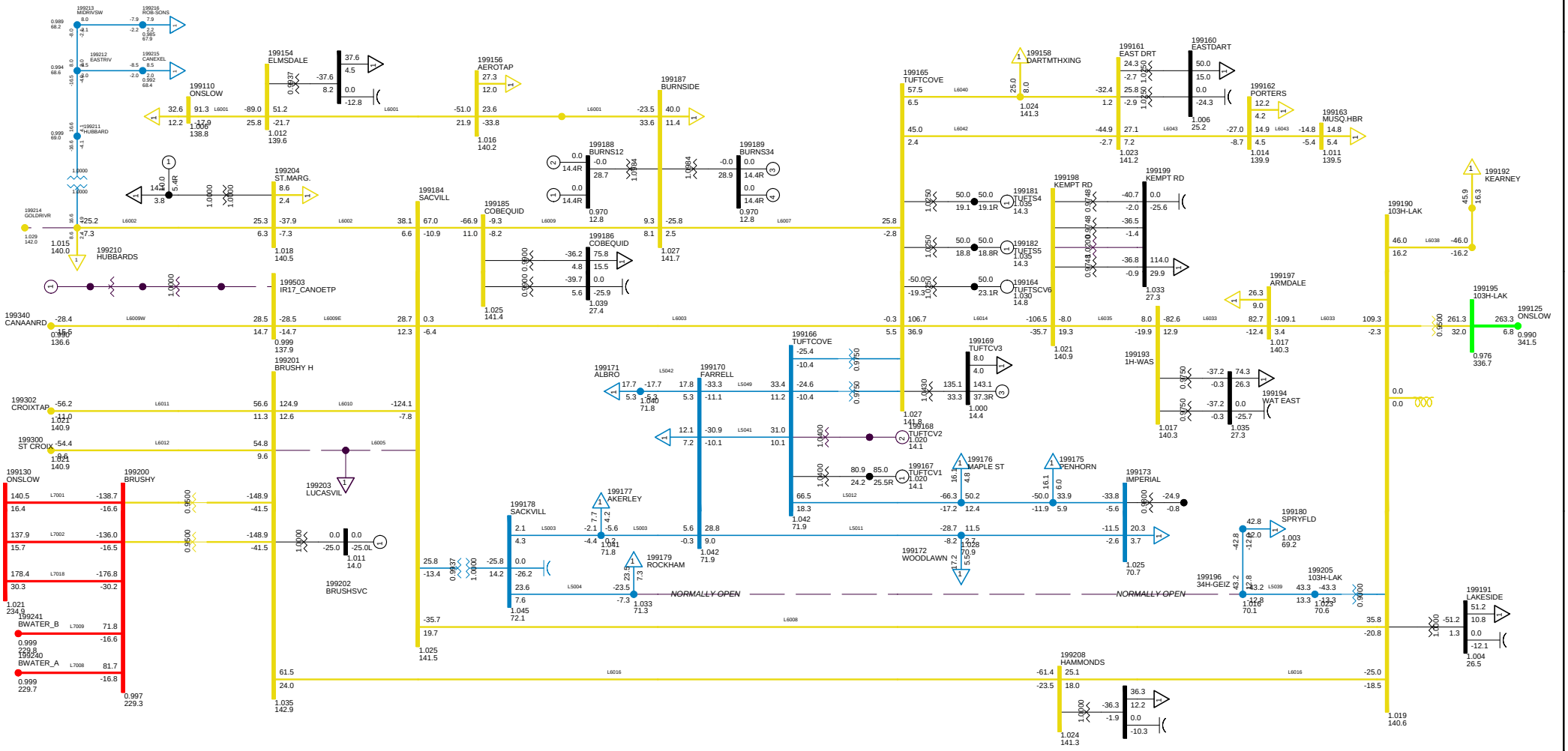

2013 WINTER PEAK STORA 167, NS LOAD 2371
NS-NB=-200; NB-NE=300; CBX=543; ONI=773 ONS=863
METRO ZONE WED, DEC 10 2008 11:26

Bus - VOLTAGE (KV/PU)
Branch - MW/MVAR
Equipment - MW/MVAR
100.0%RATE8
1.050OV 0.950UV
KV: <=30.000 <=69.000 <=138.000 <=230.000 <=345.000 >345.000

Figure __

Total Wind Gen: 140.6 MW
Gross Tupper 165.0 MW
Gross Wreck Cove 0.0 MW
Gross Lingan 648.0 MW
Gross Trenton 325.0 MW
Gross Gas Turbine 24.0 MW
Gross Pt Aconi 195.0 MW
Gross Tuft's Cove 378.1 MW
Gross Small Hydro 182.4 MW
Net Stora Load 168.3 MW
Total BMPC Load 75.5 MW

NSX -110.4 MW
CBX 544.1 MW
ONI 773.8 MW
ONS 774.1 MW

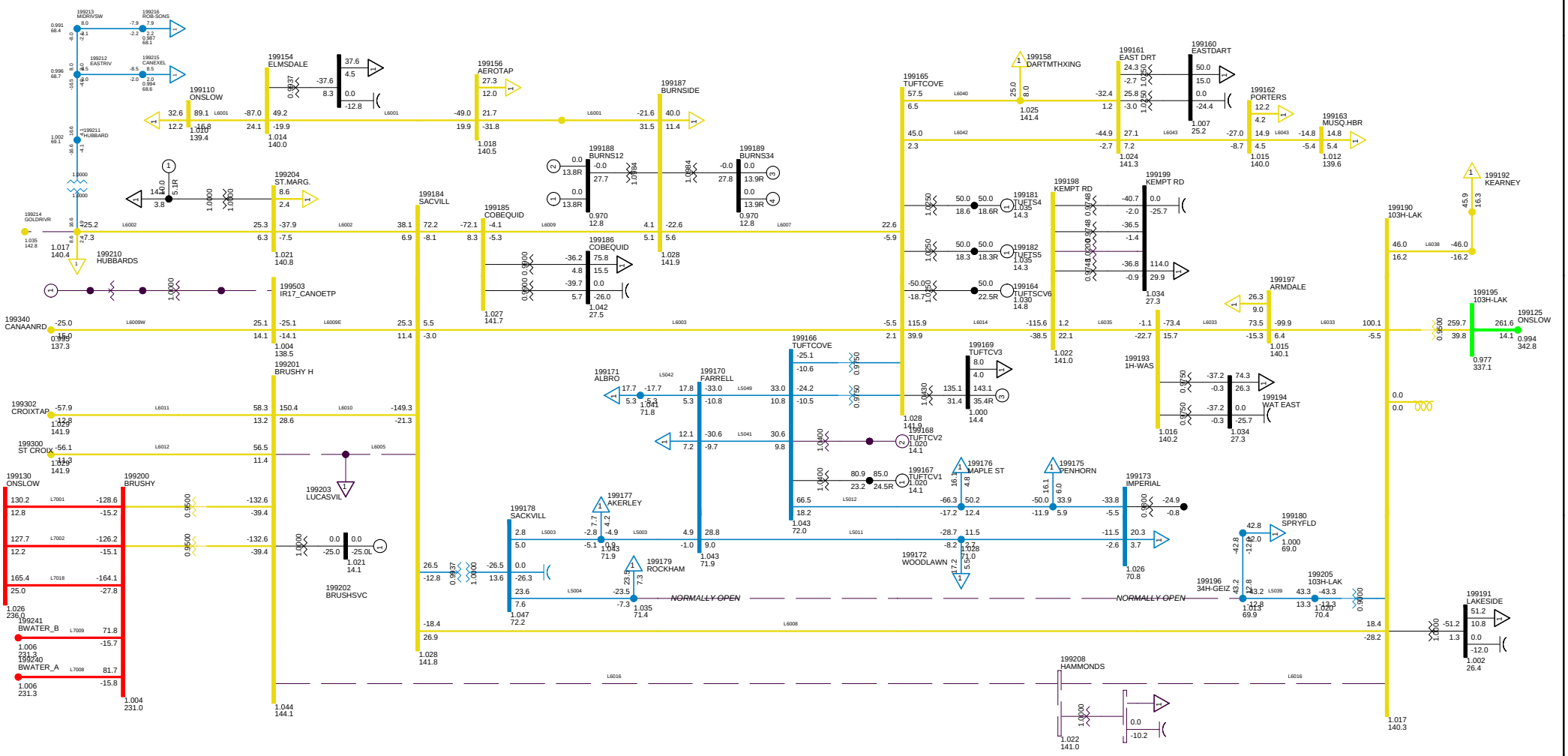

2013 WINTER PEAK NS IMPORT 200 MW
C37 DCT L6005 L6016
METRO ZONE WED, DEC 10 2008 11:27

Bus - VOLTAGE (KV/PU)
Branch - MW/MVAR
Equipment - MW/MVAR
100.0%RATE8
1.050OV 0.950UV
KV: <=30.000 <=69.000 <=138.000 <=230.000 <=345.000 >345.000

Figure __

Total Wind Gen: 140.6 MW | Gross Tupper 165.0 MW | Gross Wreck Cove 0.0 MW

Gross Lingan 648.0 MW | Gross Trenton 325.0 MW | Gross Gas Turbine 24.0 MW

Gross Pt Aconi 195.0 MW | Gross Tuft's Cove 378.1 MW | Gross Small Hydro 182.4 MW

Net Stora Load 168.3 MW | Total BMPC Load 75.5 MW

NSX -120.7 MW

CBX 544.0 MW

ONI 773.6 MW

ONS 784.2 MW

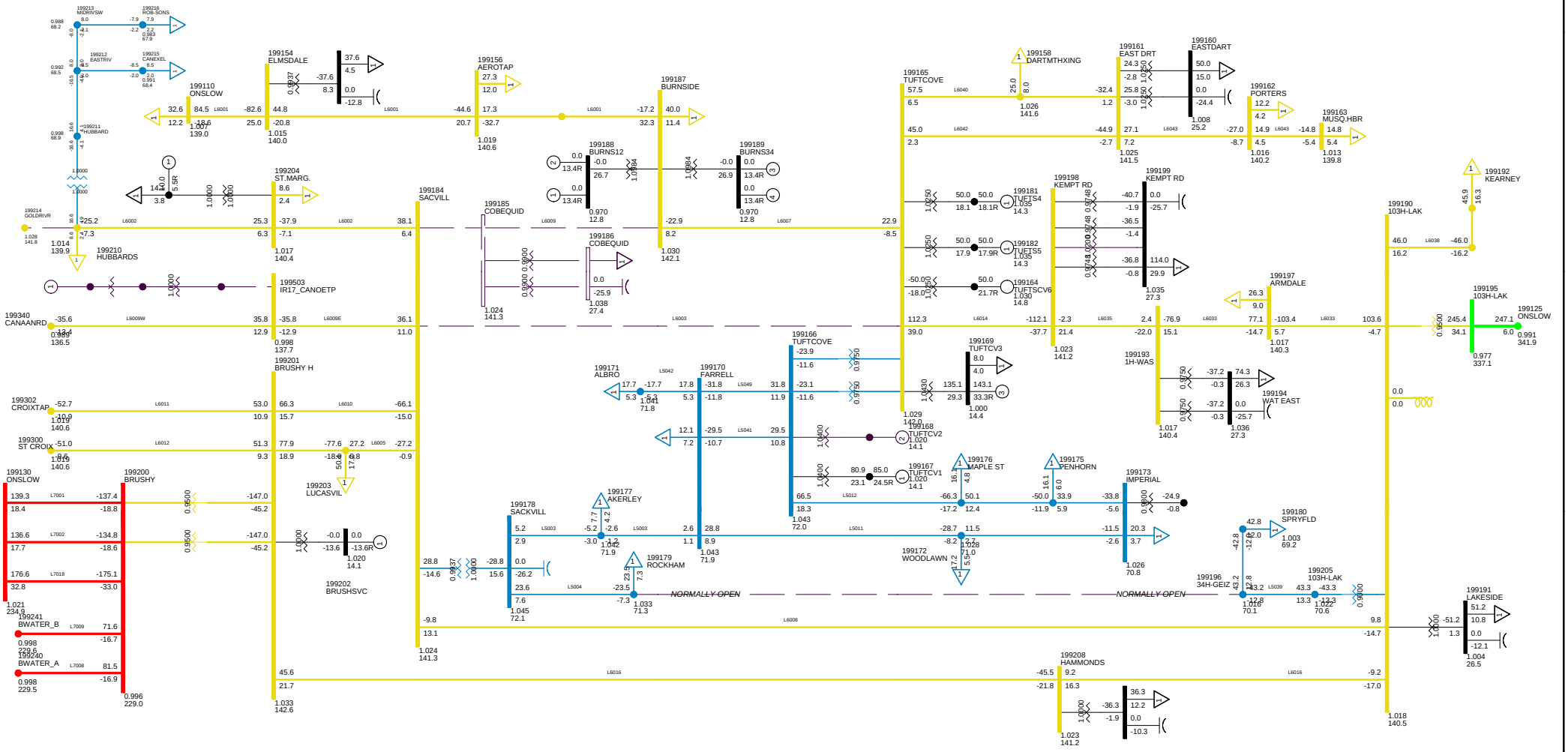

2013 WINTER PEAK NS IMPORT 200 MW
C38 DCT L6003 L6009
METRO ZONE WED, DEC 10 2008 11:27

Bus - VOLTAGE (KV/PU)
Branch - MW/MVAR
Equipment - MW/MVAR
100.0%RATE8
1.050OV 0.950UV
KV: <=30.000 <=69.000 <=138.000 <=230.000 <=345.000 >345.000

Figure __

Total Wind Gen: 140.6 MW | Gross Tupper 165.0 MW | Gross Wreck Cove 0.0 MW

Gross Lingan 648.0 MW | Gross Trenton 325.0 MW | Gross Gas Turbine 24.0 MW

Gross Pt Aconi 195.0 MW | Gross Tuft's Cove 378.1 MW | Gross Small Hydro 182.4 MW

Net Stora Load 168.3 MW | Total BMPC Load 75.5 MW

NSX -199.9 MW

CBX 543.8 MW

ONI 773.3 MW

ONS 862.9 MW

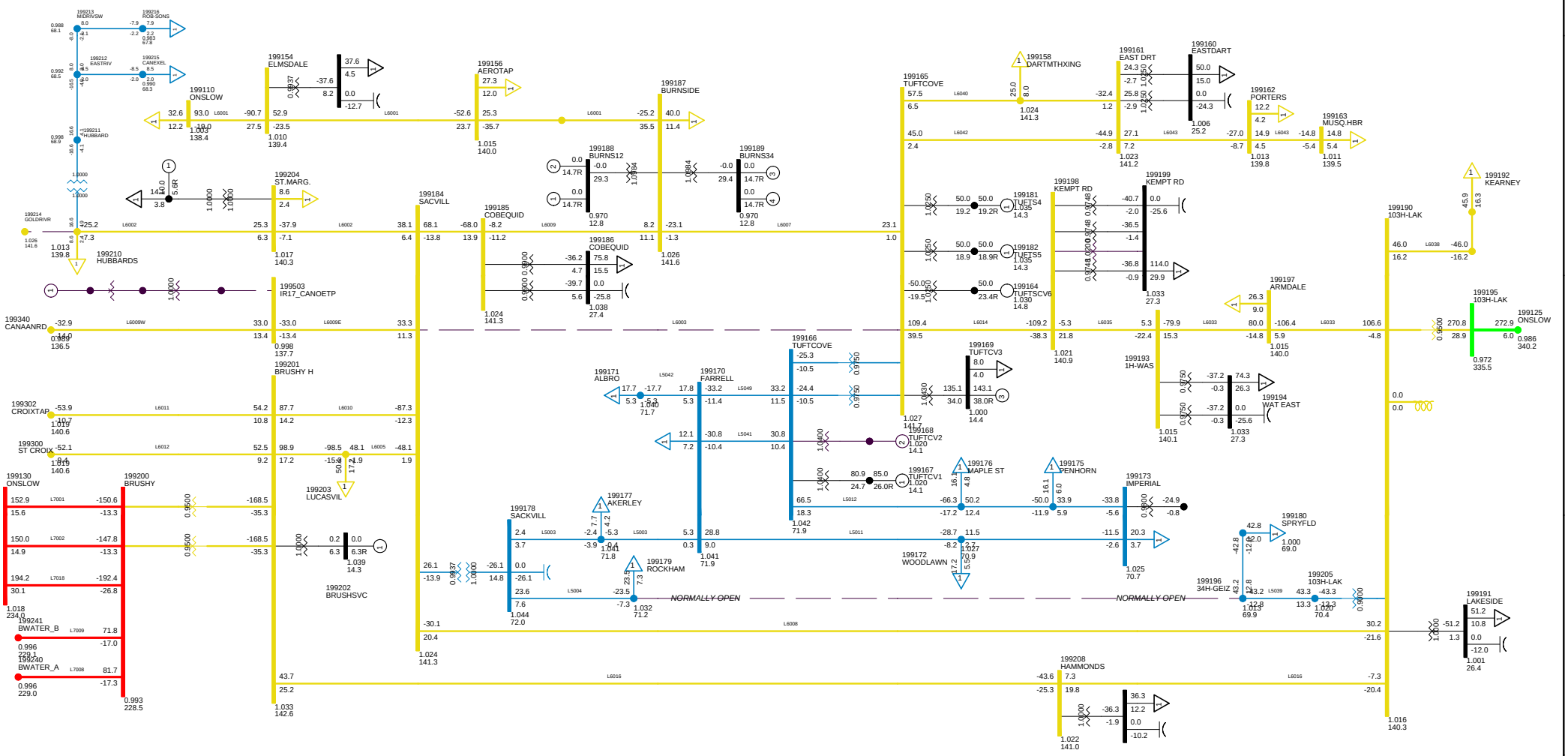

2013 WINTER PEAK NS IMPORT 200 MW
C39 DCT L6003 L6007
METRO ZONE WED, DEC 10 2008 11:27

Bus - VOLTAGE (KV/PU)
Branch - MW/MVAR
Equipment - MW/MVAR
100.0%RATE8
1.050OV 0.950UV
KV: <=30.000 <=69.000 <=138.000 <=230.000 <=345.000 >345.000

Figure __

Total Wind Gen: 110.0 MW
Gross Tupper 165.0 MW
Gross Wreck Cove 0.0 MW
Gross Lingan 648.0 MW
Gross Trenton 325.0 MW
Gross Gas Turbine 0.0 MW
Gross Pt Aconi 195.0 MW
Gross Tuft's Cove 378.1 MW
Gross Small Hydro 130.4 MW
Net Stora Load 168.3 MW
Total BMPC Load 0.0 MW

NSX -30.3 MW
CBX 544.2 MW
ONI 773.9 MW
ONS 693.9 MW

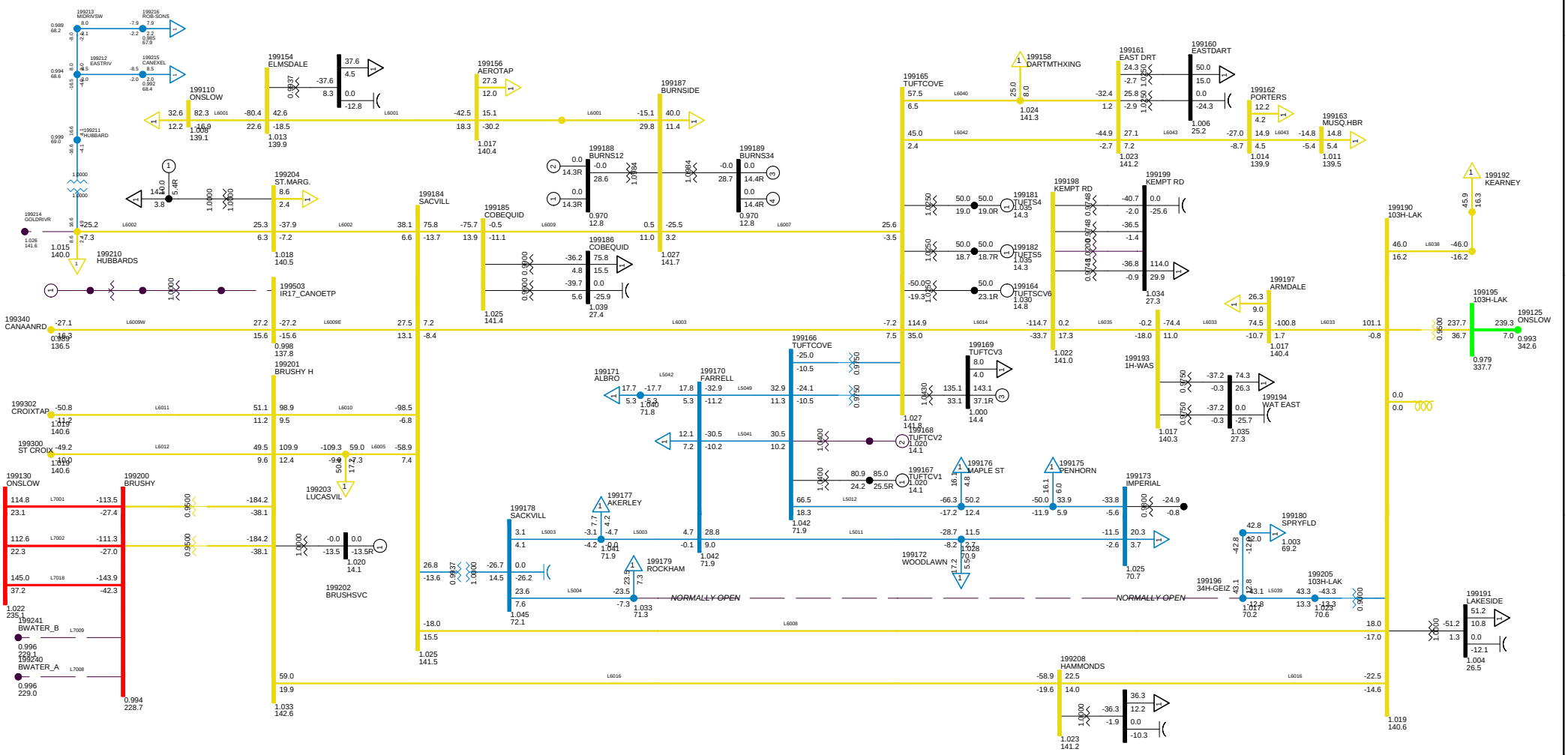

2013 WINTER PEAK NS IMPORT 200 MW
C40 DCT L7008 L7009 ISOLATES WEST
METRO ZONE WED, DEC 10 2008 11:27

Bus - VOLTAGE (KV/PU)
Branch - MW/MVAR
Equipment - MW/MVAR
100.0%RATE8
1.050OV 0.950UV
KV: <=30.000 <=69.000 <=138.000 <=230.000 <=345.000 >345.000

Figure __

Total Wind Gen: 140.6 MW
Gross Tupper 165.0 MW
Gross Wreck Cove 0.0 MW
Gross Lingan 648.0 MW
Gross Trenton 325.0 MW
Gross Gas Turbine 24.0 MW
Gross Pt Aconi 195.0 MW
Gross Tuft's Cove 378.1 MW
Gross Small Hydro 182.4 MW
Net Stora Load 168.3 MW
Total BMPC Load 75.5 MW

NSX -110.4 MW
CBX 544.1 MW
ONI 773.8 MW
ONS 774.1 MW

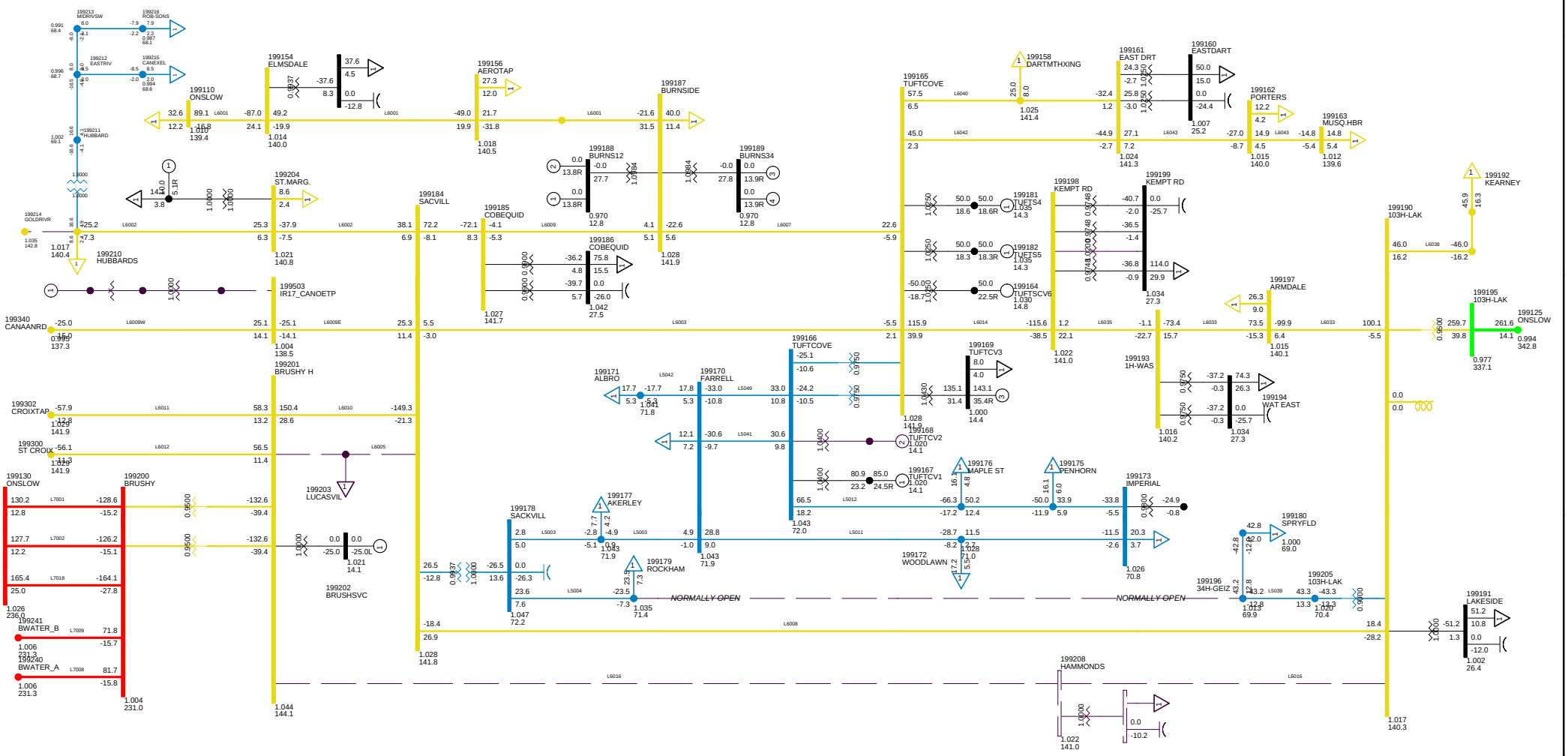

2013 WINTER PEAK NS IMPORT 200 MW
C41 1P FAULT ON L6016, BBU 622
METRO ZONE WED, DEC 10 2008 11:27

Bus - VOLTAGE (KV/PU)
Branch - MW/MVAR
Equipment - MW/MVAR
100.0%RATE8
1.050OV 0.950UV
KV: <=30.000 <=69.000 <=138.000 <=230.000 <=345.000 >345.000

Figure __

Total Wind Gen: 140.6 MW | Gross Tupper 165.0 MW | Gross Wreck Cove 0.0 MW

Gross Lingan 648.0 MW | Gross Trenton 325.0 MW | Gross Gas Turbine 24.0 MW

Gross Pt Aconi 195.0 MW | Gross Tuft's Cove 378.1 MW | Gross Small Hydro 182.4 MW

Net Stora Load 168.3 MW | Total BMPC Load 75.5 MW

NSX -138.5 MW

CBX 543.6 MW

ONI 772.6 MW

ONS 800.6 MW

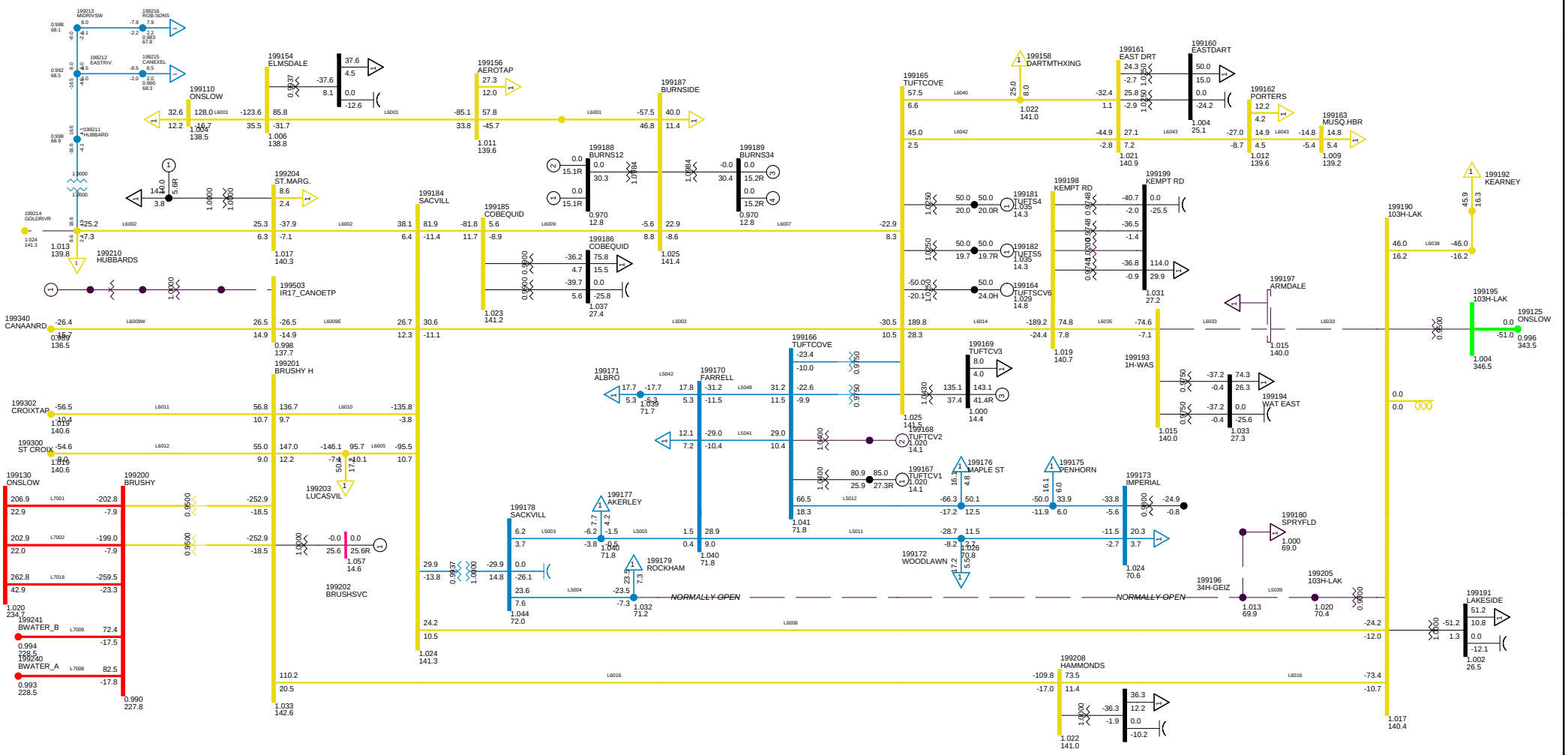

2013 WINTER PEAK NS IMPORT 200 MW
C42 1P L6033, BBU 103H-632
METRO ZONE WED, DEC 10 2008 11:27

Bus - VOLTAGE (KV/PU)
Branch - MW/MVAR
Equipment - MW/MVAR
100.0%RATE8
1.050OV 0.950UV
KV: <=30.000 <=69.000 <=138.000 <=230.000 <=345.000 >345.000

Figure __

Total Wind Gen: 140.6 MW
Gross Tupper 165.0 MW
Gross Wreck Cove 0.0 MW
Gross Lingan 648.0 MW
Gross Trenton 325.0 MW
Gross Gas Turbine 24.0 MW
Gross Pt Aconi 195.0 MW
Gross Tuft's Cove 378.1 MW
Gross Small Hydro 182.4 MW
Net Stora Load 168.3 MW
Total BMPC Load 75.5 MW

NSX -149.6 MW
CBX 544.0 MW
ONI 773.6 MW
ONS 813.1 MW

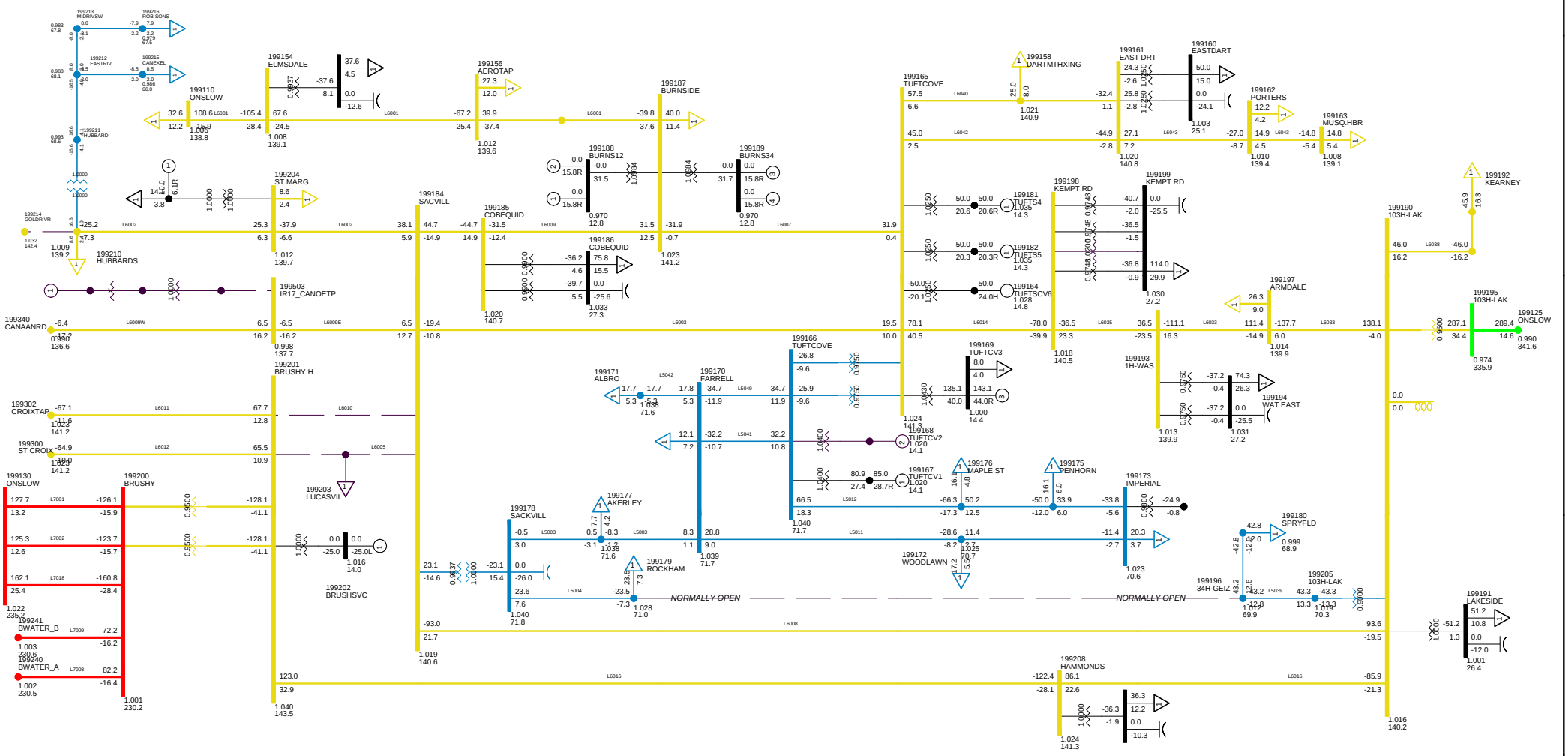

2013 WINTER PEAK NS IMPORT 200 MW
C43 BBU L6005 L6010 90H-608
METRO ZONE WED, DEC 10 2008 11:28

Bus - VOLTAGE (KV/PU)
Branch - MW/MVAR
Equipment - MW/MVAR
100.0%RATE8
1.050OV 0.950UV
KV: <=30.000 <=69.000 <=138.000 <=230.000 <=345.000 >345.000

Figure __

Total Wind Gen: 140.6 MW | Gross Tupper 165.0 MW | Gross Wreck Cove 0.0 MW

Gross Lingan 648.0 MW | Gross Trenton 325.0 MW | Gross Gas Turbine 24.0 MW

Gross Pt Aconi 195.0 MW | Gross Tuft's Cove 378.1 MW | Gross Small Hydro 182.4 MW

Net Stora Load 168.3 MW | Total BMPC Load 75.5 MW

NSX -120.8 MW

CBX 544.0 MW

ONI 773.5 MW

ONS 784.3 MW

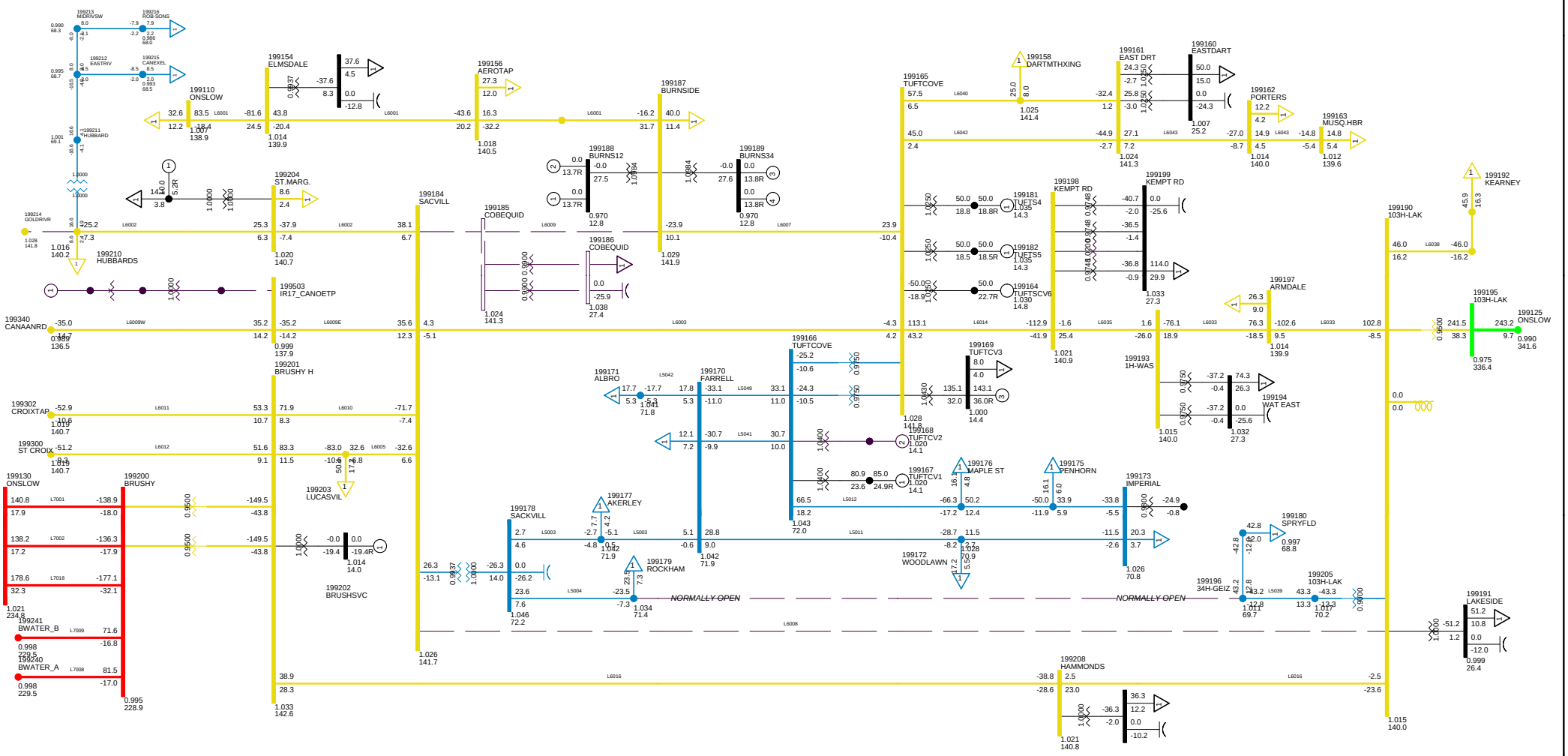

2013 WINTER PEAK NS IMPORT 200 MW
C44 BBU L6008 L6009 90H-611
METRO ZONE WED, DEC 10 2008 11:28

Bus - VOLTAGE (KV/PU)
Branch - MW/MVAR
Equipment - MW/MVAR
100.0%RATE8
1.050OV 0.950UV
KV: <=30.000 <=69.000 <=138.000 <=230.000 <=345.000 >345.000

Figure __

Total Wind Gen: 140.6 MW | Gross Tupper 165.0 MW | Gross Wreck Cove 0.0 MW

Gross Lingan 648.0 MW | Gross Trenton 325.0 MW | Gross Gas Turbine 24.0 MW

Gross Pt Aconi 195.0 MW | Gross Tuft's Cove 143.1 MW | Gross Small Hydro 182.4 MW

Net Stora Load 168.3 MW | Total BMPC Load 75.5 MW

NSX -308.1 MW

CBX 543.4 MW

ONI 772.4 MW

ONS 969.7 MW

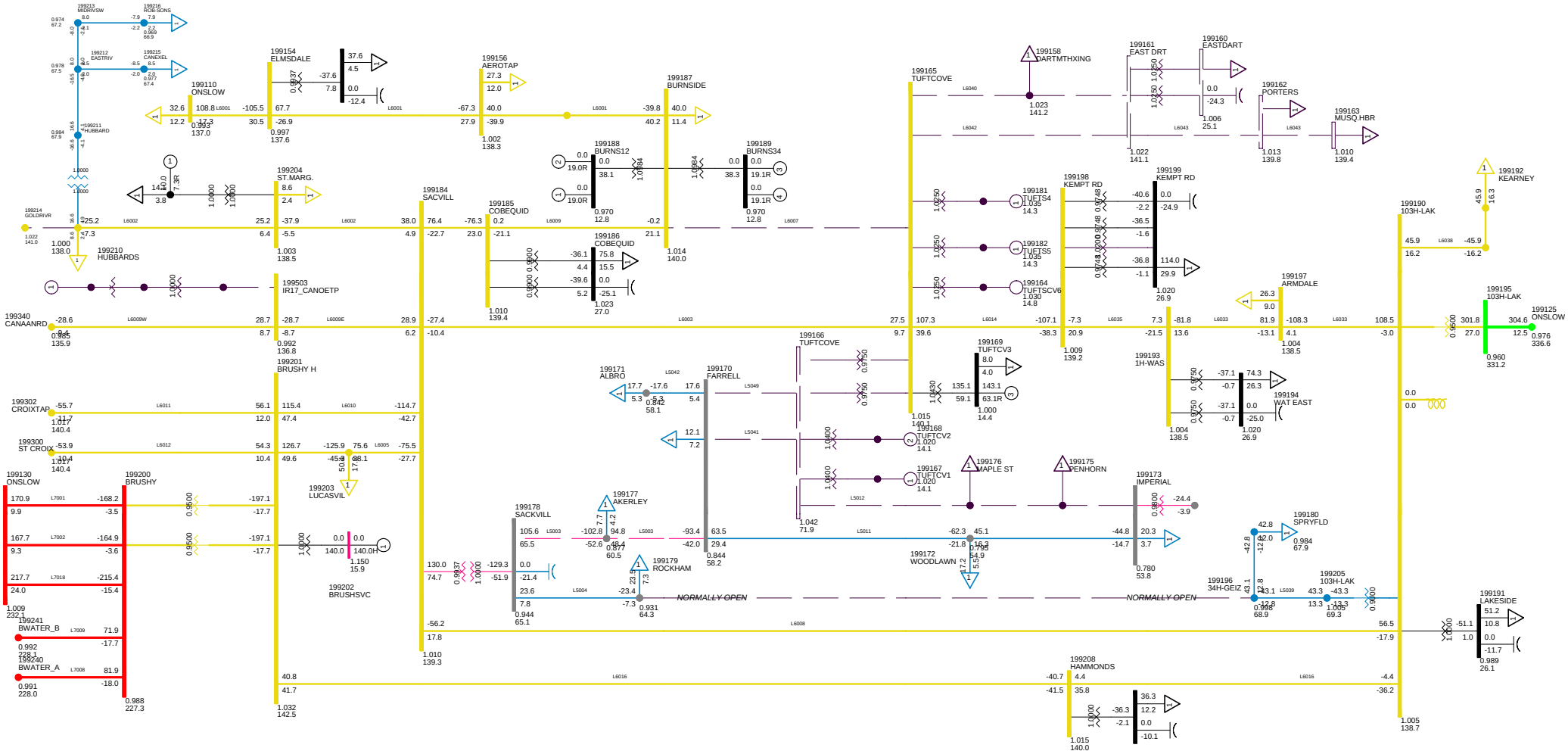

2013 WINTER PEAK NS IMPORT 200 MW
C45 BBU ON 91H-523
METRO ZONE WED, DEC 10 2008 11:28

Bus - VOLTAGE (KV/PU)
Branch - MW/MVAR
Equipment - MW/MVAR
100.0%RATE B
1.050OV 0.950UV
KV: <=30.000 <=69.000 <=138.000 <=230.000 <=345.000 >345.000

Figure __

Total Wind Gen: 140.6 MW | Gross Tupper 165.0 MW | Gross Wreck Cove 0.0 MW

Gross Lingan 648.0 MW | Gross Trenton 325.0 MW | Gross Gas Turbine 24.0 MW

Gross Pt Aconi 195.0 MW | Gross Tuft's Cove 378.1 MW | Gross Small Hydro 182.4 MW

Net Stora Load 168.3 MW | Total BMPC Load 75.5 MW

NSX -79.2 MW

CBX 544.0 MW

ONI 773.6 MW

ONS 742.6 MW

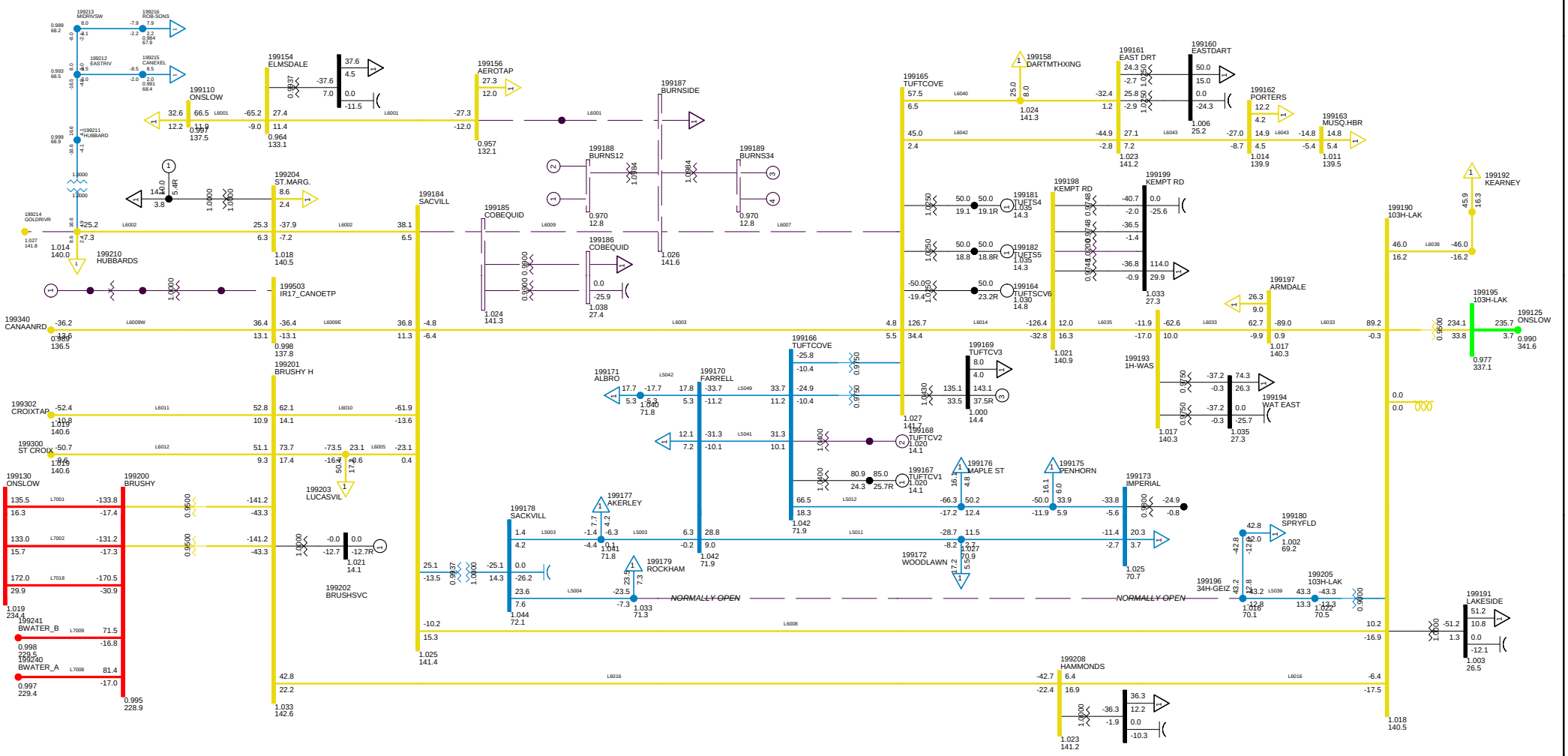

2013 WINTER PEAK NS IMPORT 200 MW
C46 1P L6009 BBU ON 108H 607
METRO ZONE WED, DEC 10 2008 11:28

Bus - VOLTAGE (KV/PU)
Branch - MW/MVAR
Equipment - MW/MVAR
100.0%RATE8
1.050OV 0.950UV
KV: <=30.000 <=69.000 <=138.000 <=230.000 <=345.000 >345.000

Figure __

Total Wind Gen: 140.6 MW
Gross Tupper 165.0 MW
Gross Wreck Cove 0.0 MW
Gross Lingan 648.0 MW
Gross Trenton 325.0 MW
Gross Gas Turbine 24.0 MW
Gross Pt Aconi 195.0 MW
Gross Tuft's Cove 378.1 MW
Gross Small Hydro 182.4 MW
Net Stora Load 168.3 MW
Total BMPC Load 75.5 MW

NSX -63.9 MW
CBX 543.8 MW
ONI 773.0 MW
ONS 726.5 MW

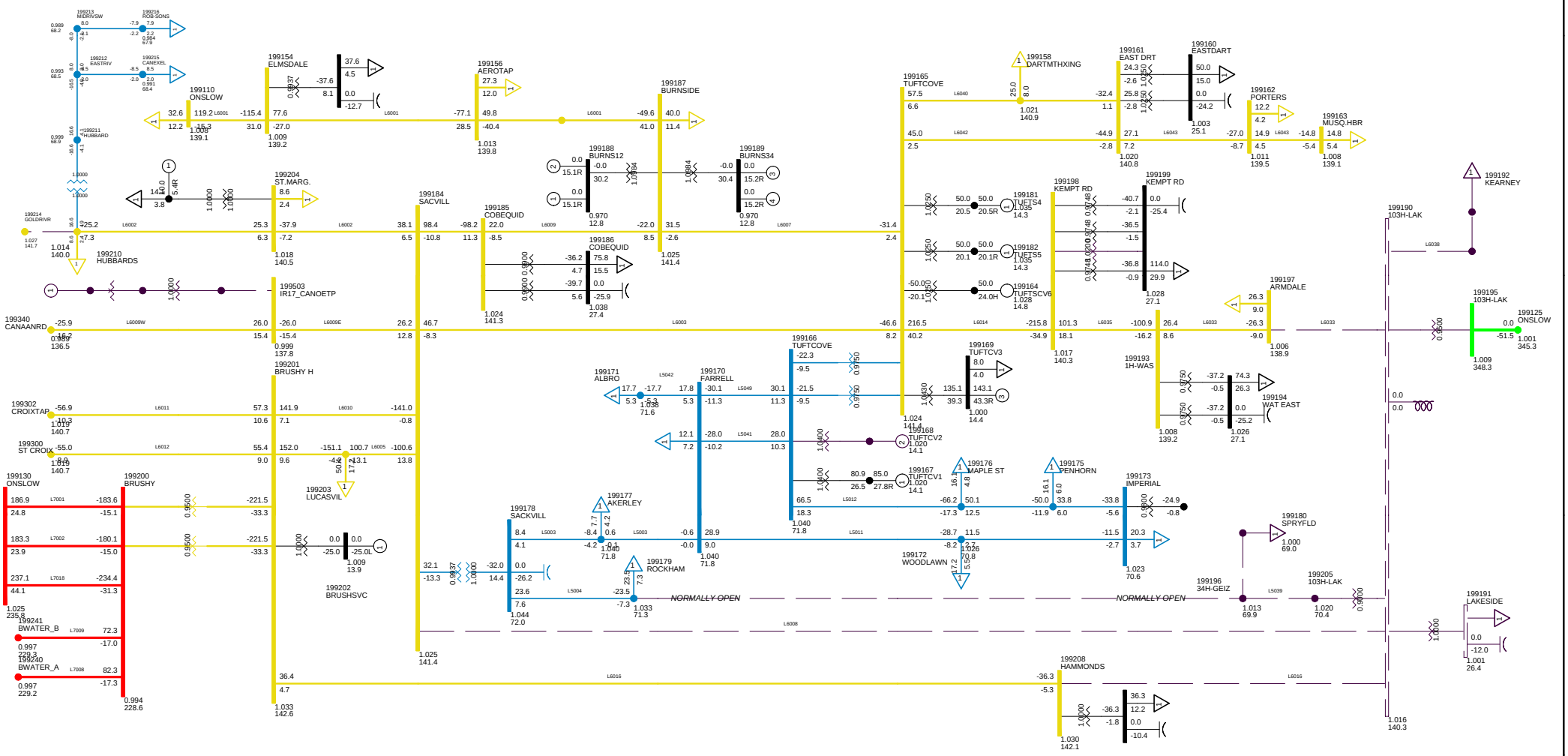

2013 WINTER PEAK NS IMPORT 200 MW
C47 1P 103H-600
METRO ZONE WED, DEC 10 2008 11:28

Bus - VOLTAGE (KV/PU)
Branch - MW/MVAR
Equipment - MW/MVAR
100.0%RATE8
1.050OV 0.950UV
KV: <=30.000 <=69.000 <=138.000 <=230.000 <=345.000

Figure __

Total Wind Gen: 140.6 MW | Gross Tupper 165.0 MW | Gross Wreck Cove 0.0 MW

Gross Lingan 648.0 MW | Gross Trenton 325.0 MW | Gross Gas Turbine 24.0 MW

Gross Pt Aconi 195.0 MW | Gross Tuft's Cove 378.1 MW | Gross Small Hydro 182.4 MW

Net Stora Load 168.3 MW | Total BMPC Load 75.5 MW

NSX -199.9 MW

CBX 543.8 MW

ONI 773.3 MW

ONS 862.9 MW

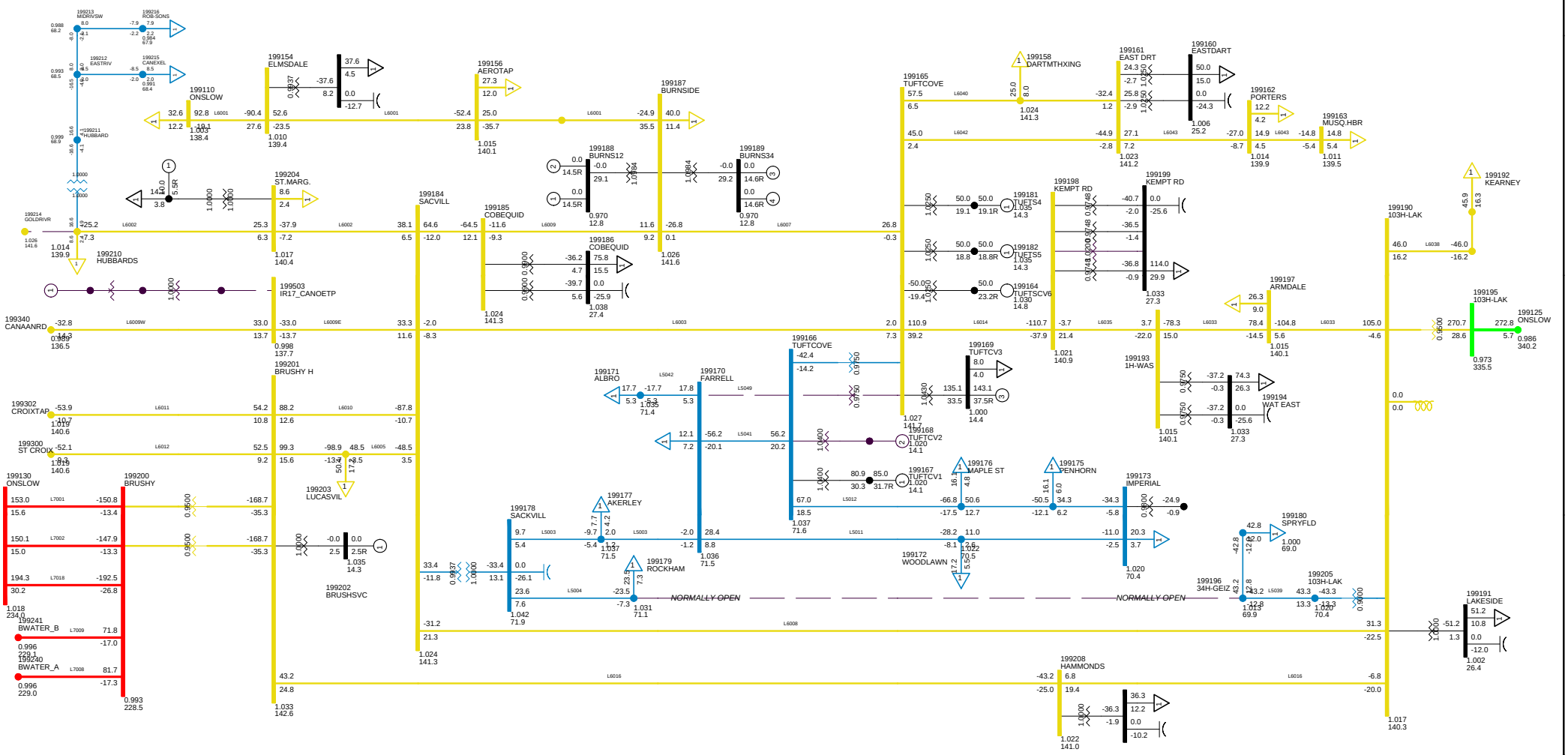

2013 WINTER PEAK NS IMPORT 200 MW
C48 1P ON BREAKER 91H-523
METRO ZONE WED, DEC 10 2008 11:28

Bus - VOLTAGE (KV/PU)
Branch - MW/MVAR
Equipment - MW/MVAR
100.0%RATE B
1.050OV 0.950UV
KV: <=30.000 <=69.000 <=138.000 <=230.000 <=345.000 >345.000

Figure __

Total Wind Gen: 140.6 MW | Gross Tupper 165.0 MW | Gross Wreck Cove 0.0 MW

Gross Lingan 648.0 MW | Gross Trenton 325.0 MW | Gross Gas Turbine 24.0 MW

Gross Pt Aconi 195.0 MW | Gross Tuft's Cove 378.1 MW | Gross Small Hydro 182.4 MW

Net Stora Load 168.3 MW | Total BMPC Load 75.5 MW

NSX -81.3 MW

CBX 544.1 MW

ONI 773.7 MW

ONS 744.8 MW

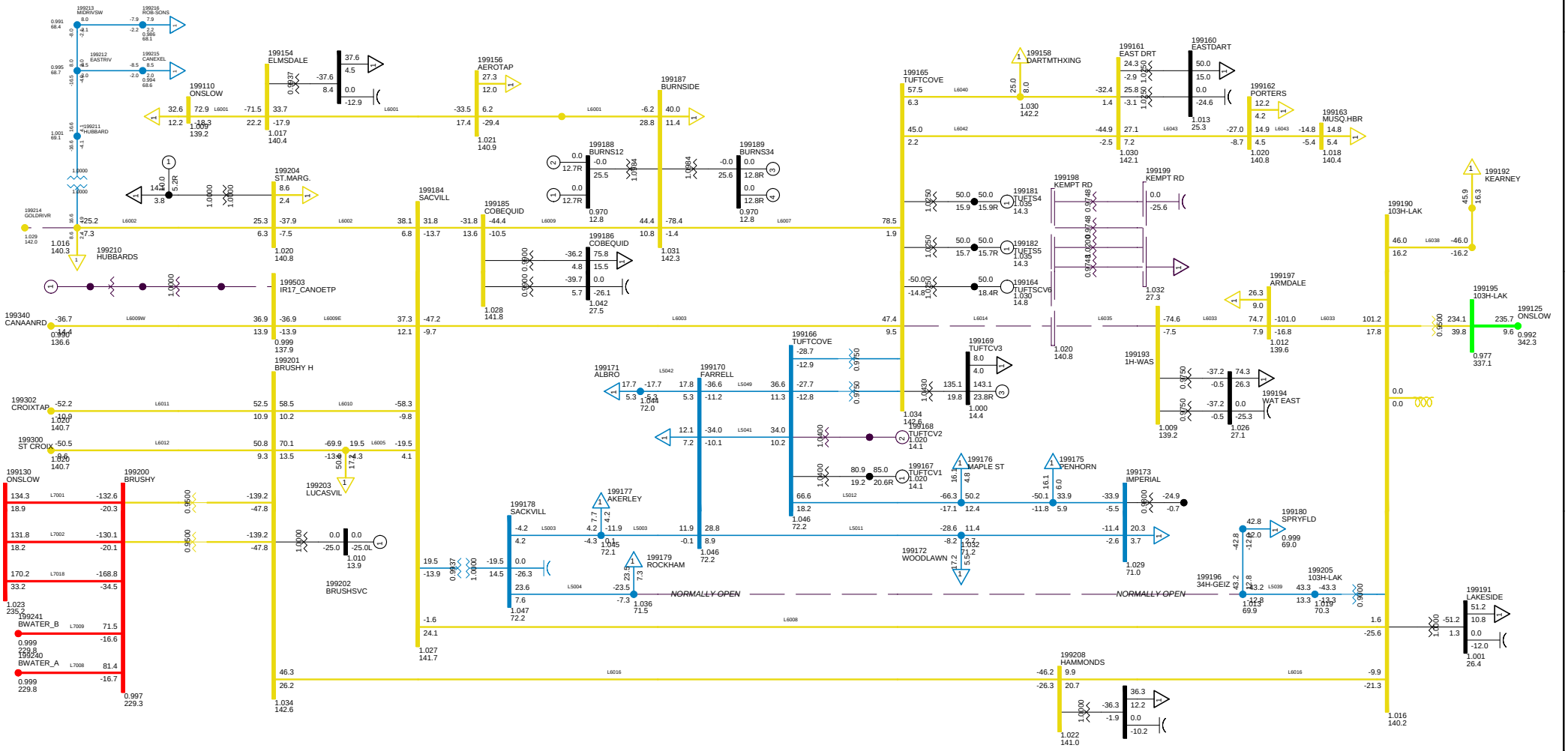

2013 WINTER PEAK NS IMPORT 200 MW
C49 1-PH ON 104H-600
METRO ZONE WED, DEC 10 2008 11:29

Bus - VOLTAGE (KV/PU)
Branch - MW/MVAR
Equipment - MW/MVAR
100.0%RATE8
1.050OV 0.950UV
KV: <=30.000 <=69.000 <=138.000 <=230.000 <=345.000 >345.000

Figure __

NSX -199.9 MW

CBX 543.8 MW

ONI 773.3 MW

ONS 862.9 MW

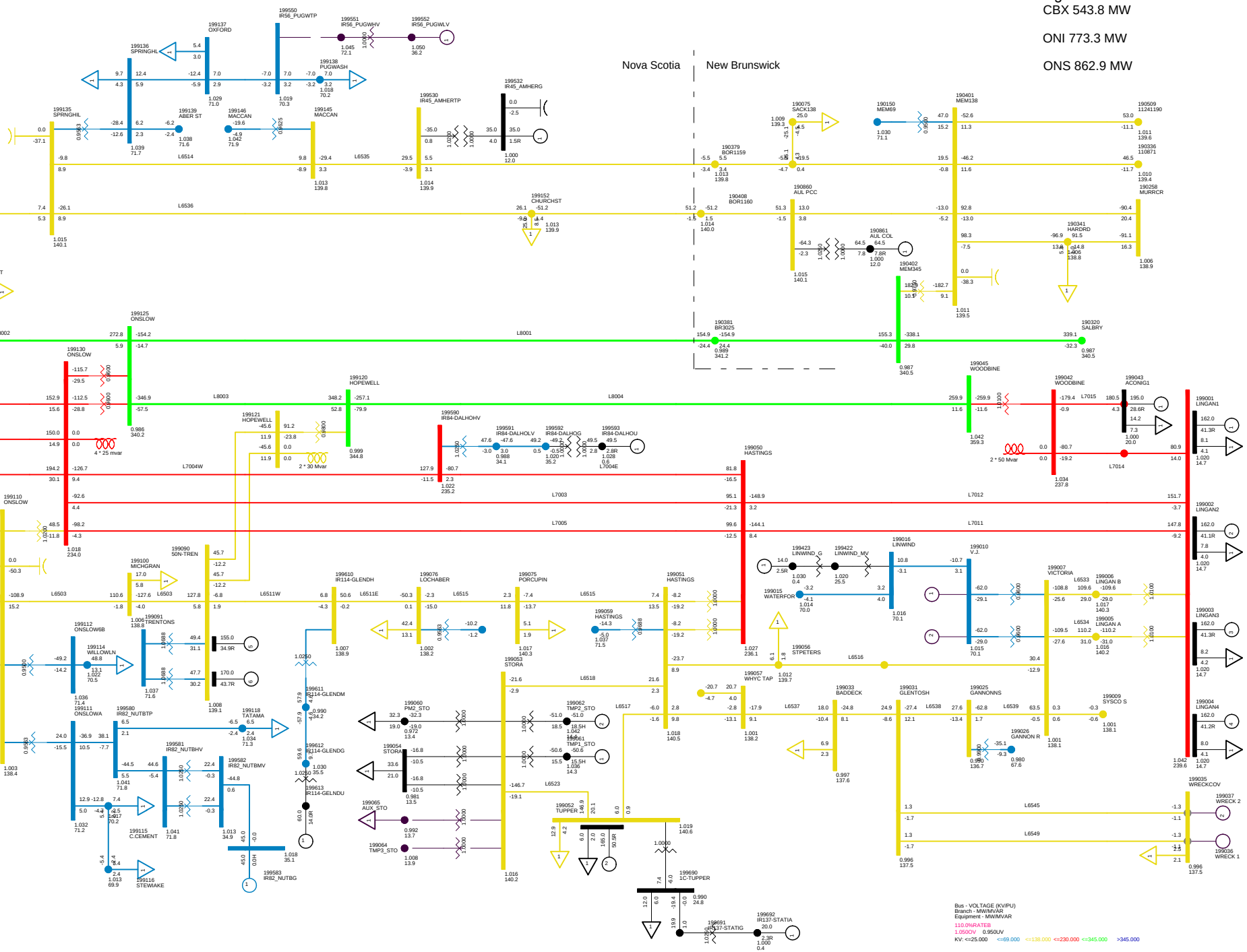

2013 WINTER PEAK STORA 167, NS LOAD 2371
NS-NB=-200; NB-NE=300; CBX=543; ONI=773 ONS=863
NORTHEASTERN NS WED, DEC 10 2008 11:29

Total Wind Gen: 140.6 MW
Gross Lingan 648.0 MW
Gross Pt Aconi 195.0 MW

Gross Tupper 165.0 MW
Gross Trenton 325.0 MW
Gross Tuft's Cove 378.1 MW

Gross Wreck Cove 0.0 MW
Gross Gas Turbine 24.0 MW
Gross Small Hydro 182.4 MW

Net Stora Load 168.3 MW
Total BMPC Load 75.5 MW

Figure ___

NSX -366.2 MW

CBX 386.1 MW

ONI 609.2 MW

ONS 865.0 MW

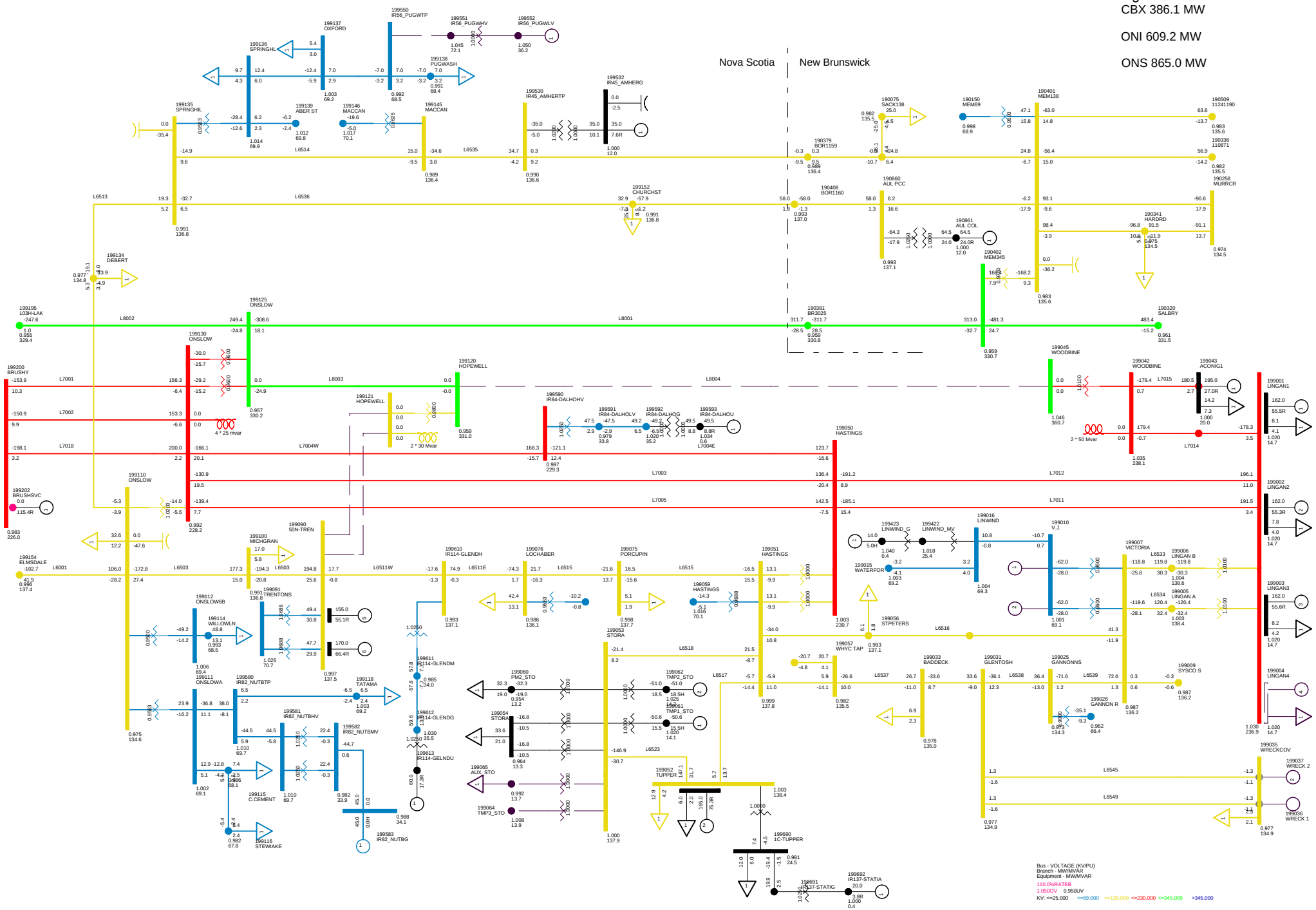

2013 WINTER PEAK NS IMPORT 200 MW
C50 1P FAULT ON L6507, BBU 79N-606
NORTHEASTERN NS WED, DEC 10 2008 11:29

Total Wind Gen: 140.6 MW
Gross Lingan 486.0 MW
Gross Pt Aconi 195.0 MW

Gross Tupper 165.0 MW
Gross Trenton 325.0 MW
Gross Tuft's Cove 378.1 MW

Gross Wreck Cove 0.0 MW
Gross Gas Turbine 24.0 MW
Gross Small Hydro 182.4 MW

Net Stora Load 168.3 MW
Total BMPC Load 75.5 MW

Figure ___

NSX -144.7 MW

CBX 543.6 MW

ONI 771.7 MW

ONS 864.1 MW

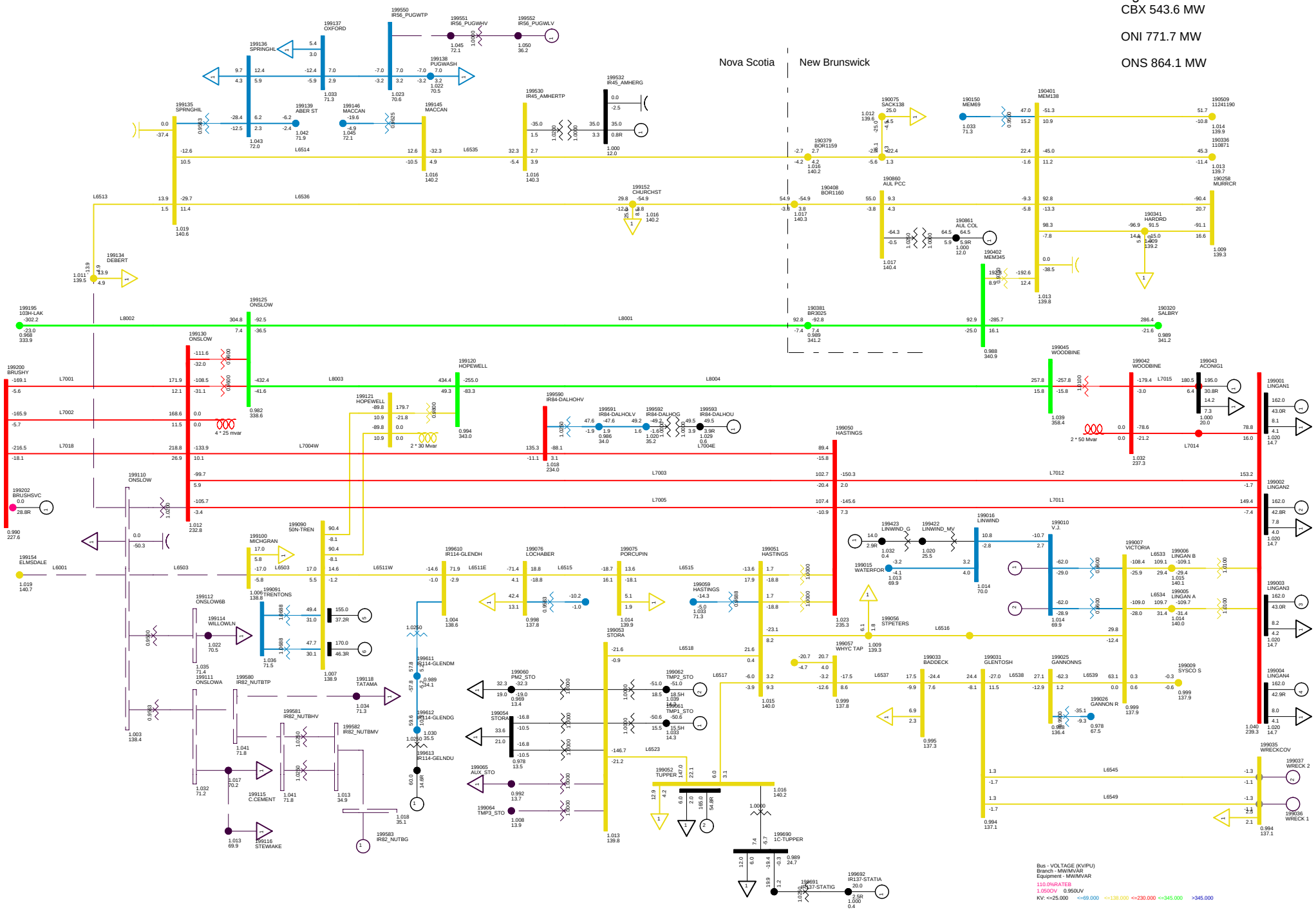

2013 WINTER PEAK NS IMPORT 200 MW
C51 1P FAULT ON 1N BUS 61
NORTHEASTERN NS WED, DEC 10 2008 11:29

Total Wind Gen: 95.6 MW
Gross Lingan 648.0 MW
Gross Pt Aconi 195.0 MW

Gross Tupper 165.0 MW
Gross Trenton 325.0 MW
Gross Tuft's Cove 378.1 MW

Gross Wreck Cove 0.0 MW
Gross Gas Turbine 24.0 MW
Gross Small Hydro 182.4 MW

Net Stora Load 168.3 MW
Total BMPC Load 75.5 MW

Figure ___

NSX -150.0 MW

CBX 595.6 MW

ONI 823.0 MW

ONS 862.9 MW

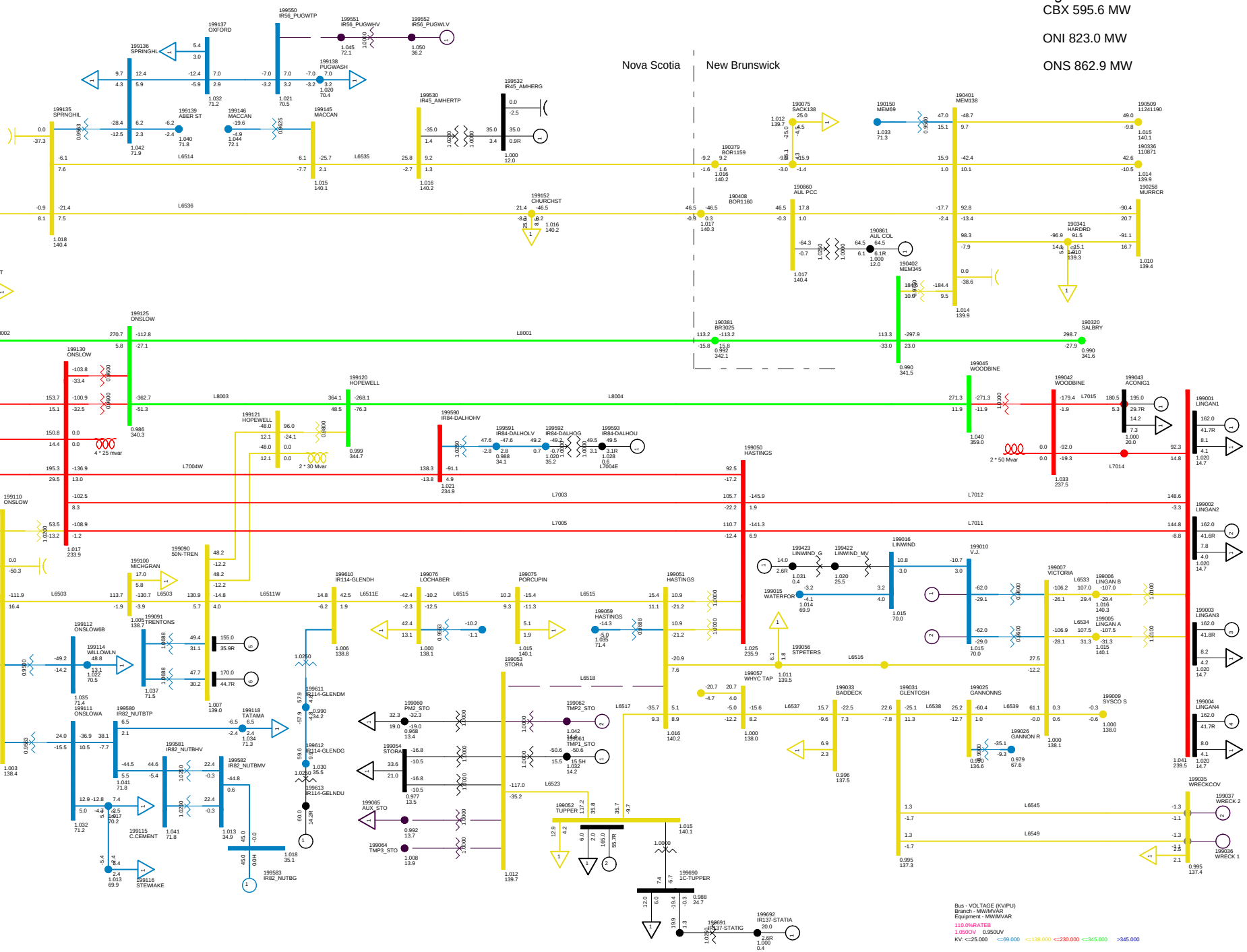
Nova Scotia
New Brunswick
199550 IR56_PUGWTP
199551 IR56_PUGWHV
199552 IR56_PUGWLV
199137 OXFORD
199136 SPRINGHL
199138 PUGWASH
199135 SPRNGHIL
199139 ABER ST
199146 MACCAN
199145 MACCAN
199530 IR45_AMHERTP
199532 IR45_AMHERG
190075 SACK138
190150 MEM69
190401 MEM138
190509 11241190
190379 BOR1159
190336 110871
190258 MURRCR
199152 CHURCHST
190408 BOR1160
190860 AUL PCC
190861 AUL COL
190341 HARDRD
190402 MEM345
199134 DEBERT
199195 103H-LAK
199125 ONSLOW
190381 BR3025
190320 SALBRY
199130 ONSLOW
199120 HOPEWELL
199045 WOODBINE
199042 WOODBINE
199043 ACONIG1
199200 BRUSHY
199121 HOPEWELL
199590 IR84-DALHOHV
199591 IR84-DALHOLV
199592 IR84-DALHOG
199593 IR84-DALHOU
199050 HASTINGS
199001 LINGAN1
199002 LINGAN2
199003 LINGAN3
199004 LINGAN4
199202 BRUSHSVC
199110 ONSLOW
199090 50N-TREN
199100 MICHGRAN
199154 ELMSDALE
199610 IR114-GLENDH
199076 LOCHABER
199075 PORCUPIN
199051 HASTINGS
199423 LINWIND_G
199422 LINWIND_MV
199016 LINWIND
199010 V.J.
199015 WATERFOR
199007 VICTORIA
199006 LINGAN B
199005 LINGAN A
199009 SYSCO S
199056 STPETERS
199057 WHYC TAP
199059 HASTINGS
199112 ONSLOW6B
199114 WILLOWLN
199091 TRENTONS
199111 ONSLOWA
199580 IR82_NUTBTP
199581 IR82_NUTBHV
199582 IR82_NUTBMV
199118 TATAMA
199115 C.CEMENT
199116 STEWIAKE
199583 IR82_NUTBG
199611 IR114-GLENDM
199612 IR114-GLENDG
199613 IR114-GELNDU
199053 STORA
199060 PM2_STO
199054 STORA
199065 AUX_STO
199064 TMP3_STO
199062 TMP2_STO
199061 TMP1_STO
199052 TUPPER
199690 1C-TUPPER
199691 IR137-STATIG
199692 IR137-STATIA
199033 BADDECK
199031 GLENTOSH
199025 GANNONNS
199026 GANNON R
199035 WRECKCOV
199037 WRECK 2
199036 WRECK 1
L6001
L6002
L6003
L6004
L6005
L6007
L6008
L6009
L6010
L6011
L6012
L6013
L6014
L6015
L6016
L6017
L6018
L6023
L6024
L6025
L6026
L6027
L6028
L6029
L6030
L6031
L6032
L6033
L6034
L6035
L6036
L6037
L6038
L6039
L6040
L6041
L6042
L6043
L6044
L6045
L6046
L6047
L6048
L6049
L6050
L6051
L6052
L6053
L6054
L6055
L6056
L6057
L6058
L6059
L6060
L6061
L6062

NSX -150.4 MW

CBX 595.2 MW

ONI 822.7 MW

ONS 862.9 MW

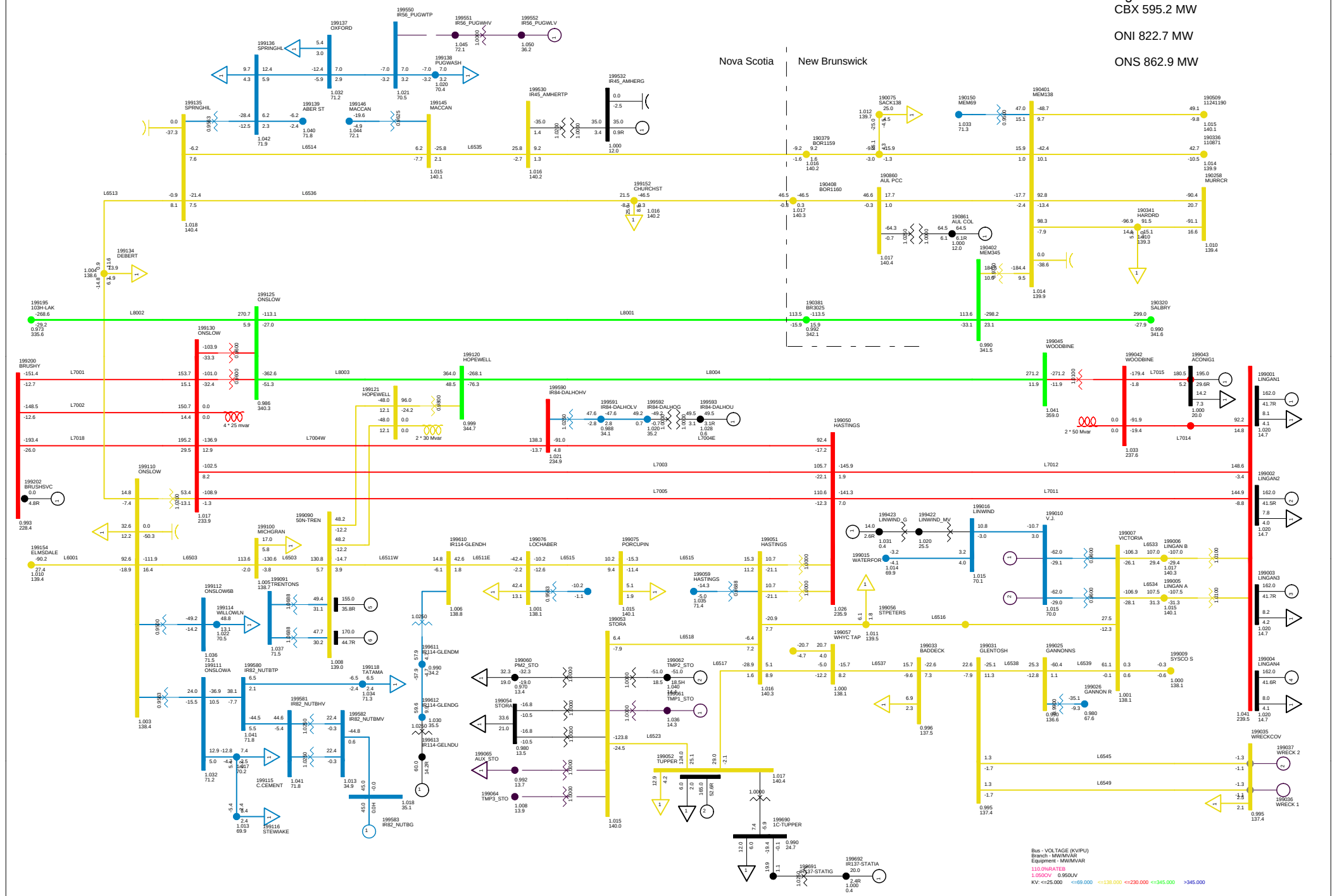

2013 WINTER PEAK NS IMPORT 200 MW
C53 BREAKR 47C-602 FAULT
NORTHEASTERN NS WED, DEC 10 2008 11:29

Total Wind Gen: 140.6 MW
Gross Lingan 648.0 MW
Gross Pt Aconi 195.0 MW

Gross Tupper 165.0 MW
Gross Trenton 325.0 MW
Gross Tuft's Cove 378.1 MW

Gross Wreck Cove 0.0 MW
Gross Gas Turbine 24.0 MW
Gross Small Hydro 182.4 MW

Net Stora Load 117.4 MW
Total BMPC Load 75.5 MW

Figure ___

NSX -199.9 MW

CBX 543.8 MW

ONI 773.3 MW

ONS 862.9 MW

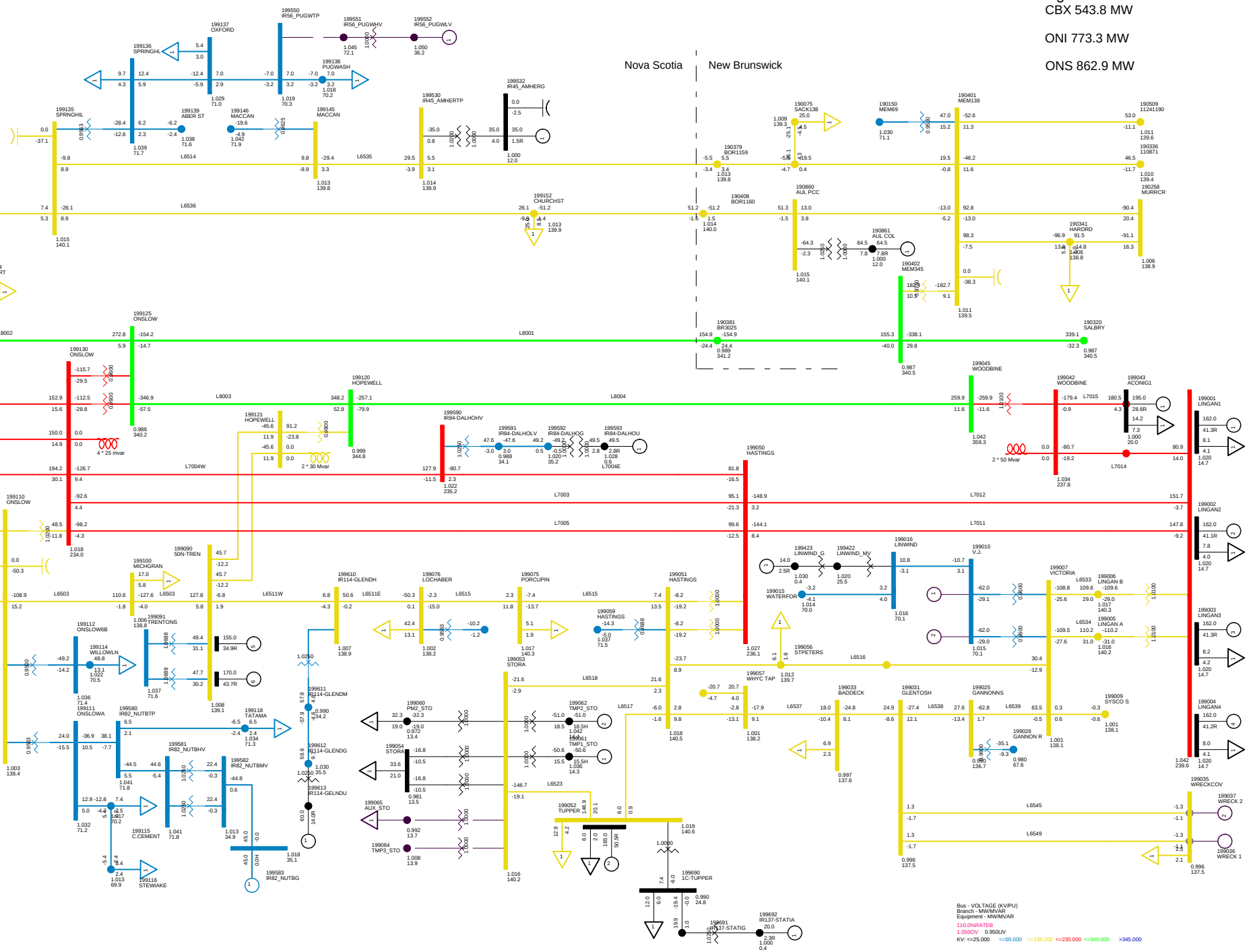

2013 WINTER PEAK STORA 167, NS LOAD 2371
NS-NB=-200; NB-NE=300; CBX=543; ONI=773 ONS=863
NORTHEASTERN NS WED, DEC 10 2008 11:30

Total Wind Gen: 140.6 MW
Gross Lingan 648.0 MW
Gross Pt Aconi 195.0 MW

Gross Tupper 165.0 MW
Gross Trenton 325.0 MW
Gross Tuft's Cove 378.1 MW

Gross Wreck Cove 0.0 MW
Gross Gas Turbine 24.0 MW
Gross Small Hydro 182.4 MW

Net Stora Load 168.3 MW
Total BMPC Load 75.5 MW

Figure ___

NSX -348.4 MW

CBX 391.5 MW

ONI 625.3 MW

ONS 863.0 MW

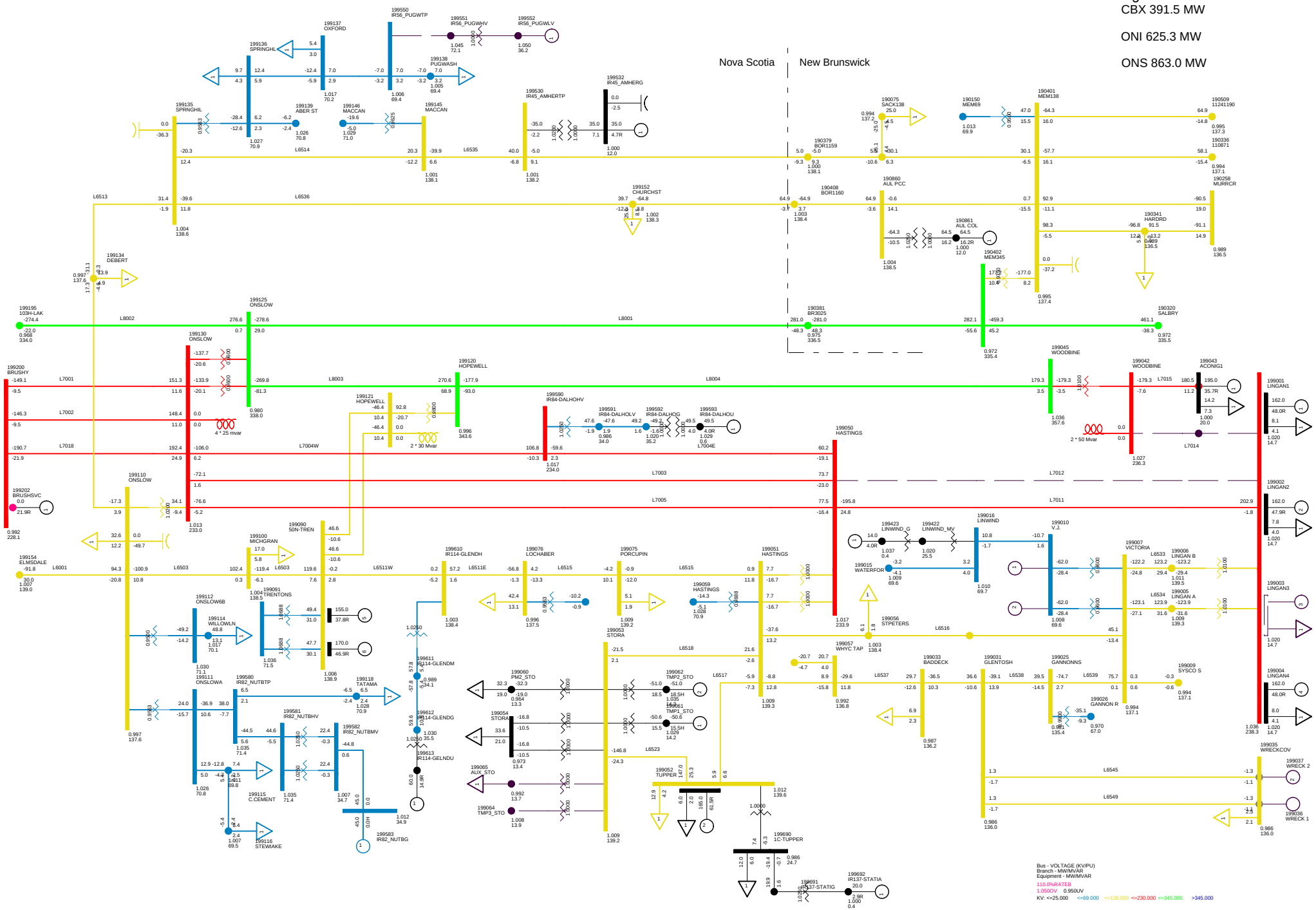

2013 WINTER PEAK NS IMPORT 200 MW
C54S BBU 88S-723 WITH SPS
NORTHEASTERN NS WED, DEC 10 2008 11:30

Total Wind Gen: 140.6 MW
Gross Lingan 486.0 MW
Gross Pt Aconi 195.0 MW

Gross Tupper 165.0 MW
Gross Trenton 325.0 MW
Gross Tuft's Cove 378.1 MW

Gross Wreck Cove 0.0 MW
Gross Gas Turbine 24.0 MW
Gross Small Hydro 182.4 MW

Net Stora Load 168.3 MW
Total BMPC Load 75.5 MW

Figure ___

NSX -207.8 MW

CBX 544.6 MW

ONI 770.6 MW

ONS 868.2 MW

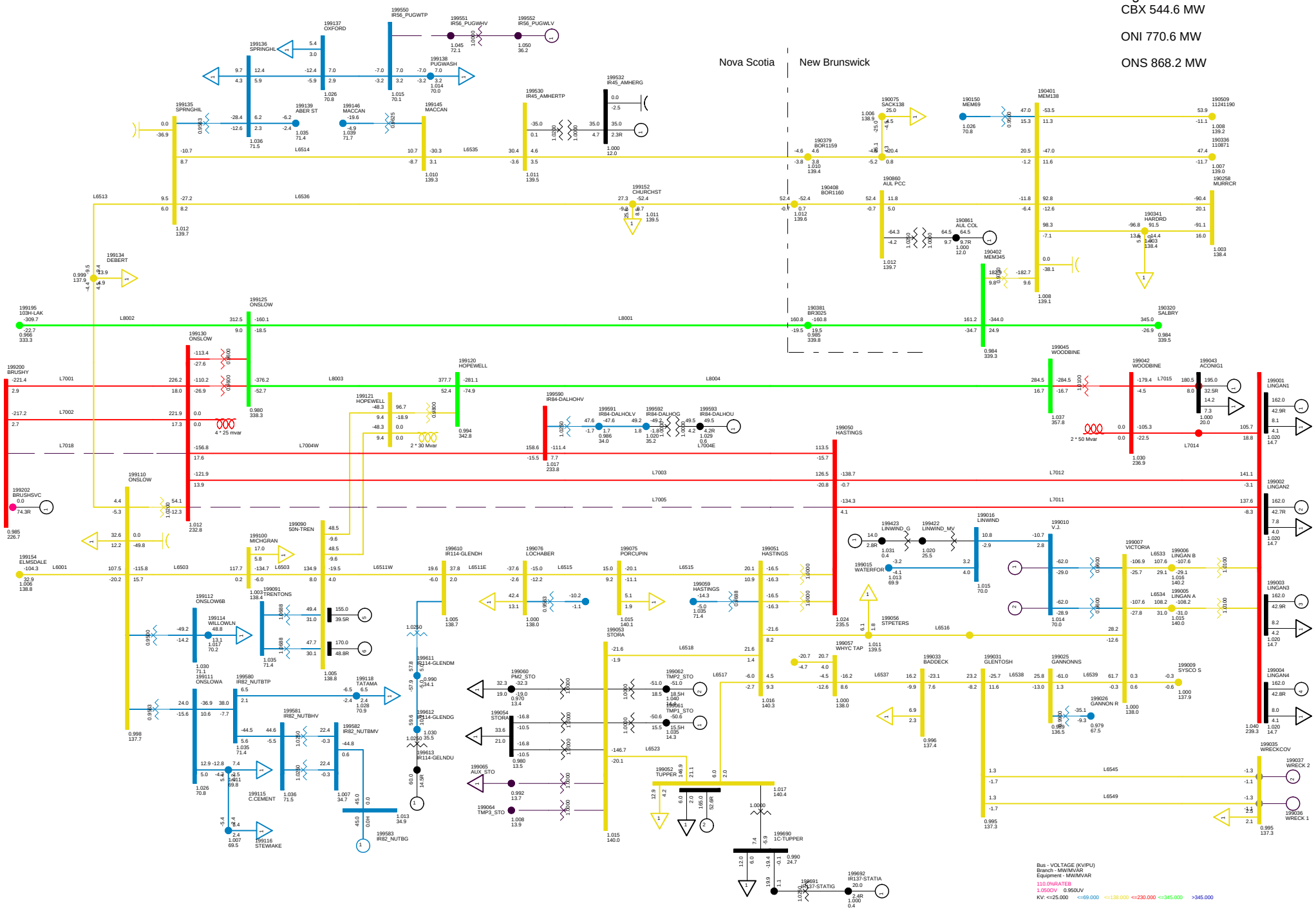

2013 WINTER PEAK NS IMPORT 200 MW
C55 BBU 67N-712
NORTHEASTERN NS WED, DEC 10 2008 11:30

Total Wind Gen: 140.6 MW
Gross Lingan 648.0 MW
Gross Pt Aconi 195.0 MW

Gross Tupper 165.0 MW
Gross Trenton 325.0 MW
Gross Tuft's Cove 378.1 MW

Gross Wreck Cove 0.0 MW
Gross Gas Turbine 24.0 MW
Gross Small Hydro 182.4 MW

Net Stora Load 168.3 MW
Total BMPC Load 75.5 MW

Figure ___

NSX -231.6 MW

CBX 533.8 MW

ONI 744.6 MW

ONS 865.9 MW

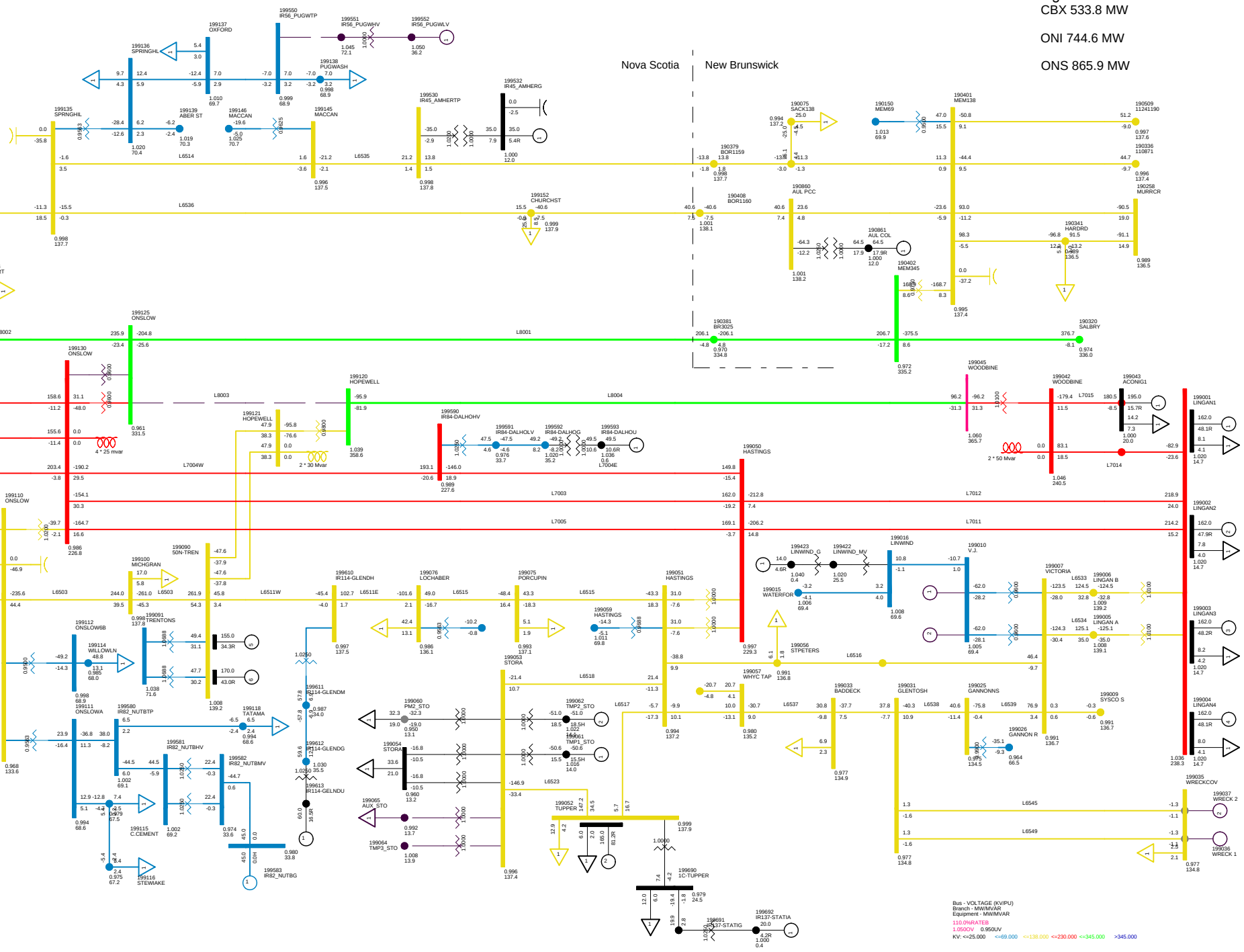

2013 WINTER PEAK NS IMPORT 200 MW
C56 BBU 67N-811 L8003 + T82 NO SPS
NORTHEASTERN NS WED, DEC 10 2008 11:30

Total Wind Gen: 140.6 MW
Gross Lingan 648.0 MW
Gross Pt Aconi 195.0 MW

Gross Tupper 165.0 MW
Gross Trenton 325.0 MW
Gross Tuft's Cove 378.1 MW

Gross Wreck Cove 0.0 MW
Gross Gas Turbine 24.0 MW
Gross Small Hydro 182.4 MW

Net Stora Load 168.3 MW
Total BMPC Load 75.5 MW

Figure ___

NSX -247.7 MW

CBX 532.7 MW

ONI 742.1 MW

ONS 879.0 MW

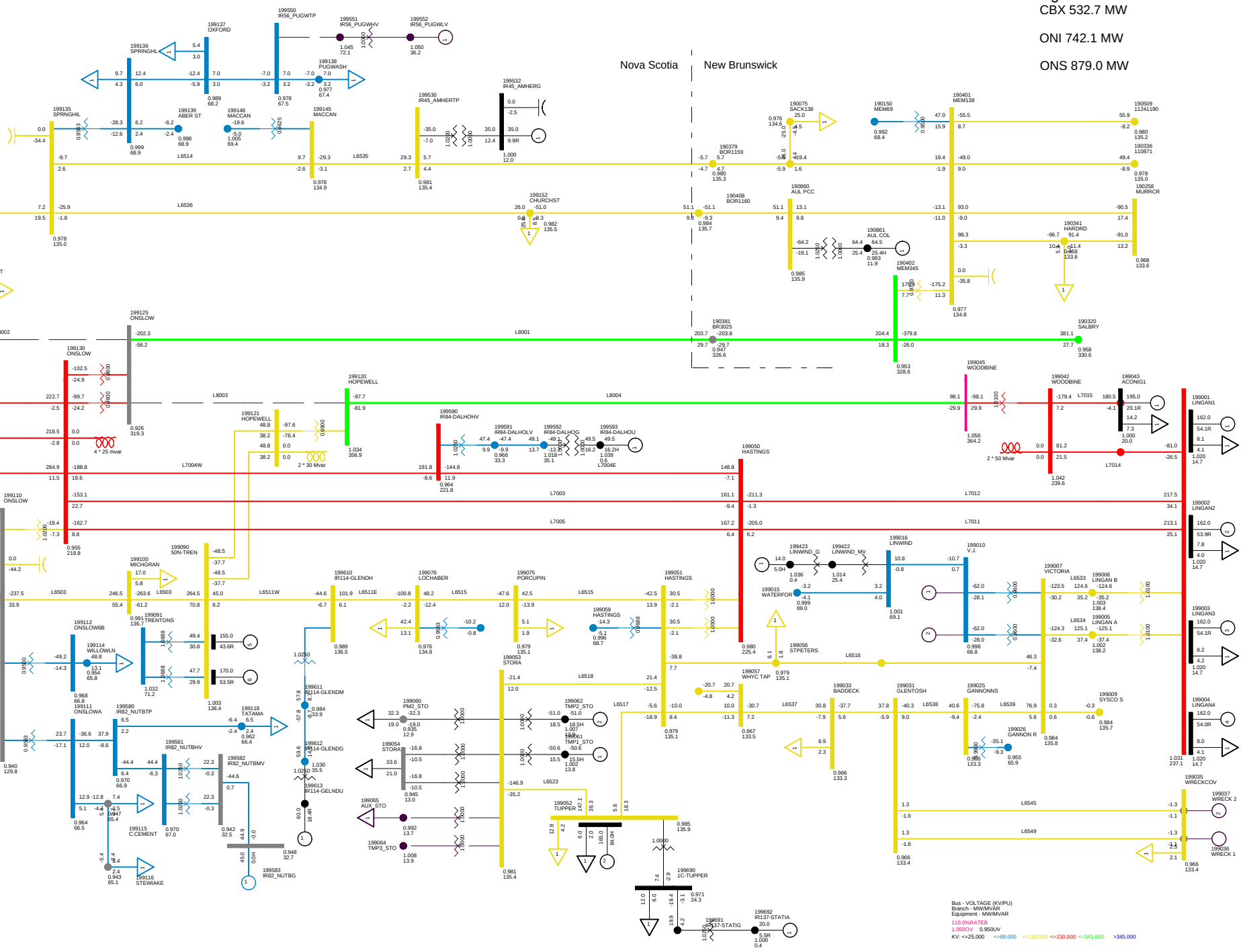

2013 WINTER PEAK NS IMPORT 200 MW
C57 BBU 67N-812 L8003+L8002 NO SPS
NORTHEASTERN NS WED, DEC 10 2008 11:31

Total Wind Gen: 140.6 MW
Gross Lingan 648.0 MW
Gross Pt Aconi 195.0 MW

Gross Tupper 165.0 MW
Gross Trenton 325.0 MW
Gross Tuft's Cove 378.1 MW

Gross Wreck Cove 0.0 MW
Gross Gas Turbine 24.0 MW
Gross Small Hydro 182.4 MW

Net Stora Load 168.3 MW
Total BMPC Load 75.4 MW

Figure ___

NSX -239.5 MW

CBX 523.9 MW

ONI 736.3 MW

ONS 865.5 MW

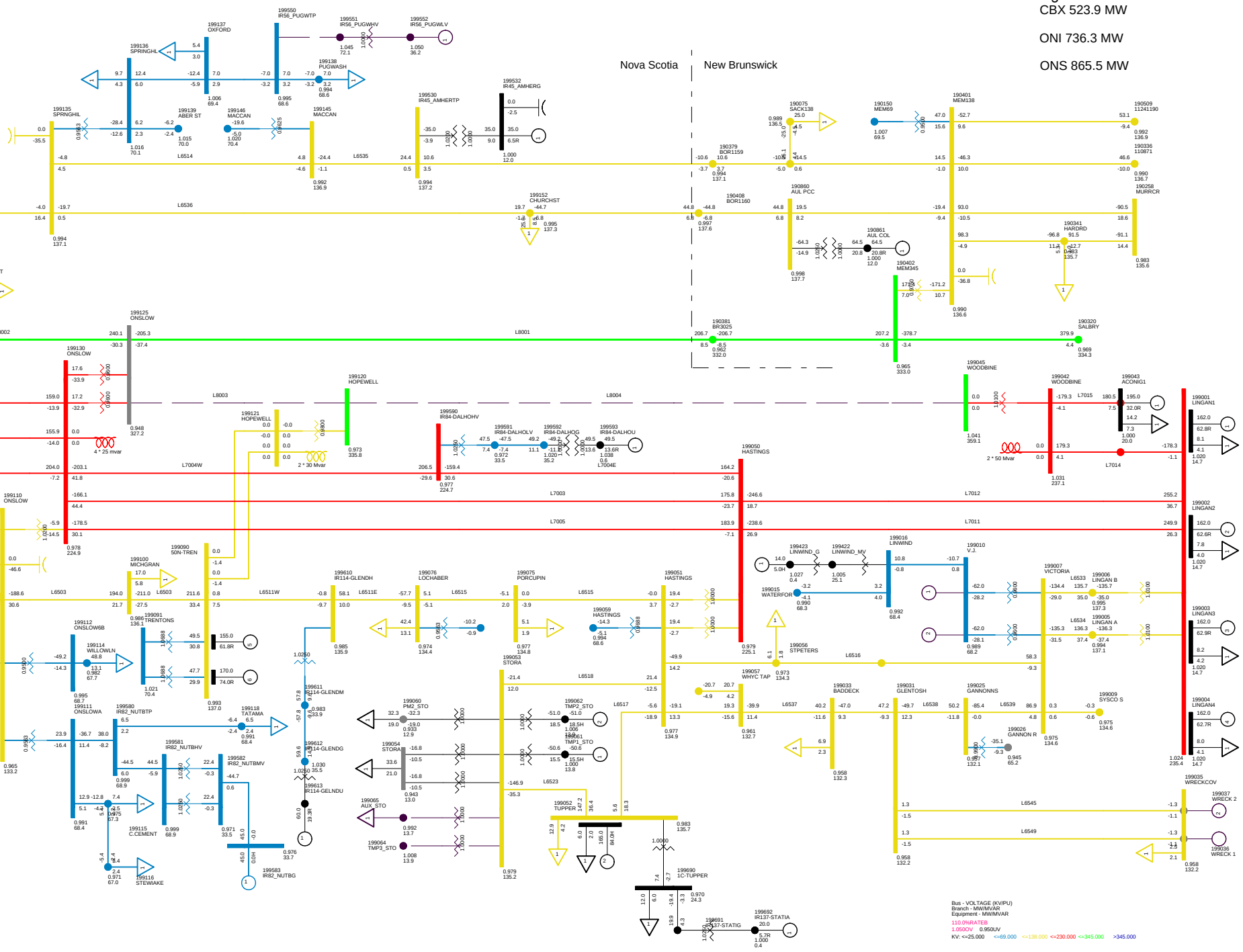

2013 WINTER PEAK NS IMPORT 200 MW
C58 BBU 79N-810 NO SPS
NORTHEASTERN NS WED, DEC 10 2008 11:31

Total Wind Gen: 140.6 MW
Gross Lingan 648.0 MW
Gross Pt Aconi 195.0 MW

Gross Tupper 165.0 MW
Gross Trenton 325.0 MW
Gross Tuft's Cove 378.1 MW

Gross Wreck Cove 0.0 MW
Gross Gas Turbine 24.0 MW
Gross Small Hydro 182.4 MW

Net Stora Load 168.3 MW
Total BMPC Load 75.5 MW

Figure ___

NSX -488.4 MW

CBX 249.7 MW

ONI 486.5 MW

ONS 863.1 MW

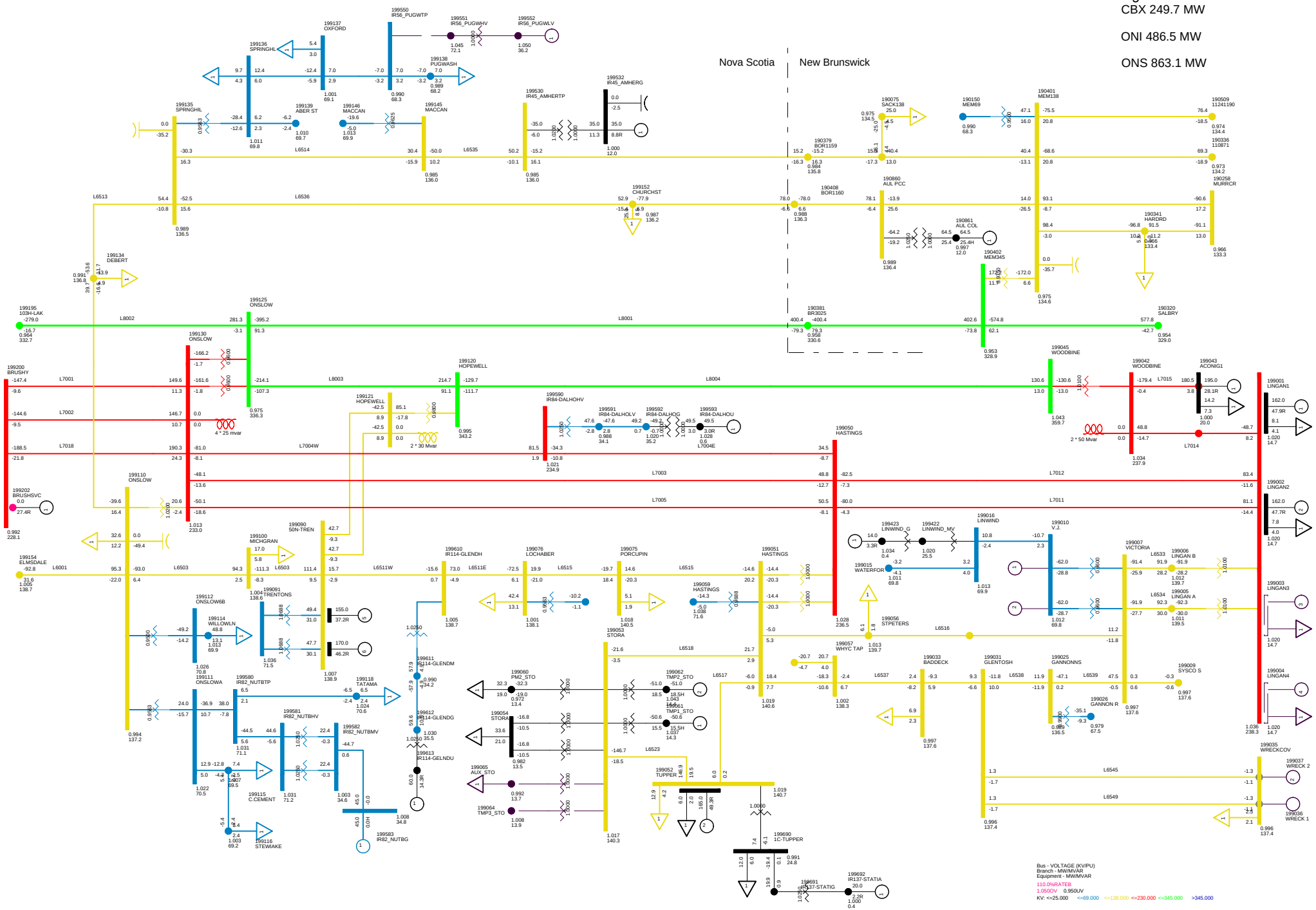

2013 WINTER PEAK NS IMPORT 200 MW
C59 BBU 88S-721 TRIP LINGAN 3 AND 4
NORTHEASTERN NS WED, DEC 10 2008 11:32

Total Wind Gen: 140.6 MW
Gross Lingan 324.0 MW
Gross Pt Aconi 195.0 MW

Gross Tupper 165.0 MW
Gross Trenton 325.0 MW
Gross Tuft's Cove 378.1 MW

Gross Wreck Cove 0.0 MW
Gross Gas Turbine 24.0 MW
Gross Small Hydro 182.4 MW

Net Stora Load 168.3 MW
Total BMPC Load 75.5 MW

Figure ___

NSX -200.7 MW

CBX 545.4 MW

ONI 772.7 MW

ONS 863.1 MW

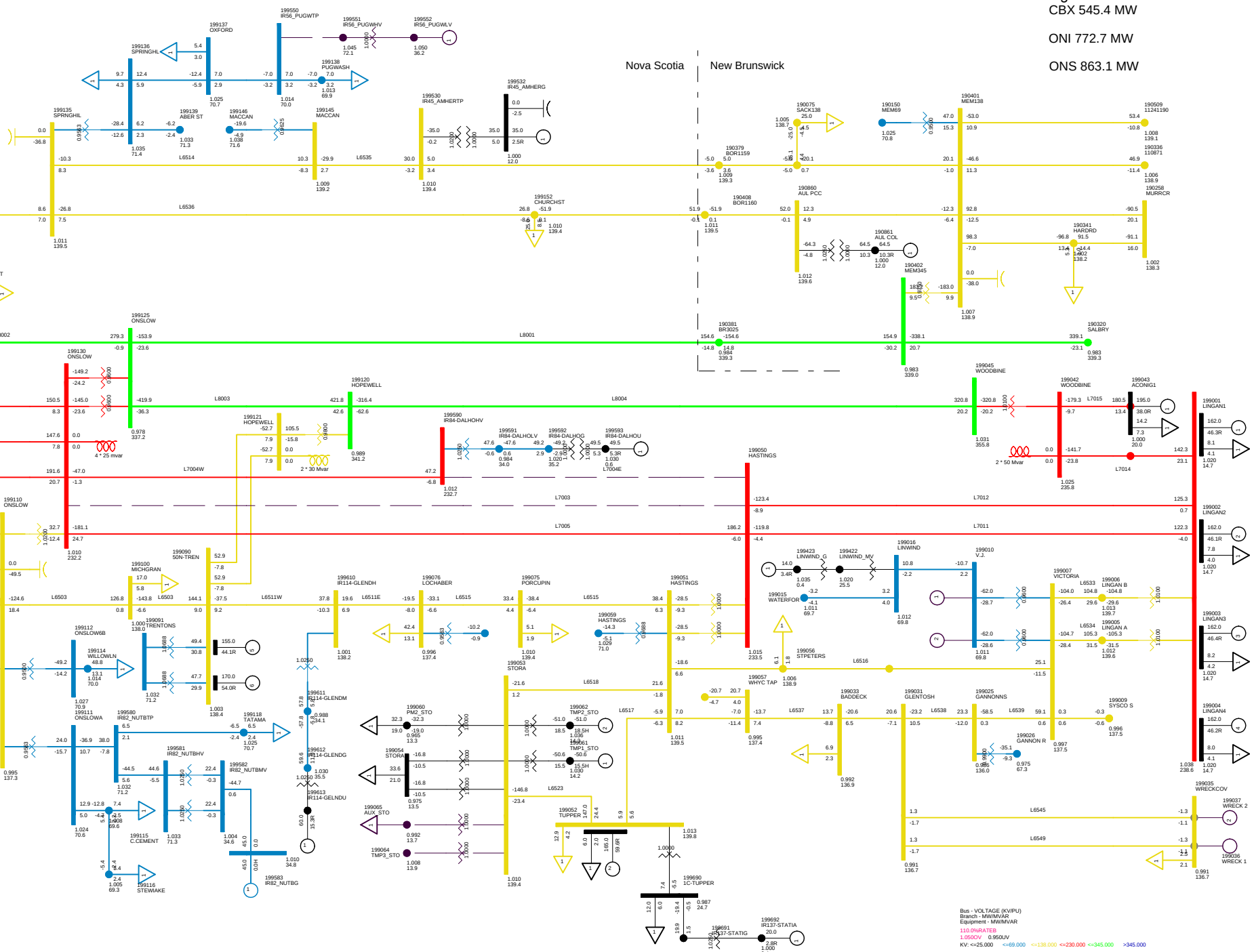

2013 WINTER PEAK NS IMPORT 200 MW
C60 DCT ON L7003+L7004
NORTHEASTERN NS WED, DEC 10 2008 11:32

Total Wind Gen: 140.6 MW
Gross Lingan 648.0 MW
Gross Pt Aconi 195.0 MW

Gross Tupper 165.0 MW
Gross Trenton 325.0 MW
Gross Tuft's Cove 378.1 MW

Gross Wreck Cove 0.0 MW
Gross Gas Turbine 24.0 MW
Gross Small Hydro 182.4 MW

Net Stora Load 168.3 MW
Total BMPC Load 75.5 MW

Figure ___

NSX -245.7 MW

CBX 523.5 MW

ONI 729.2 MW

ONS 864.6 MW

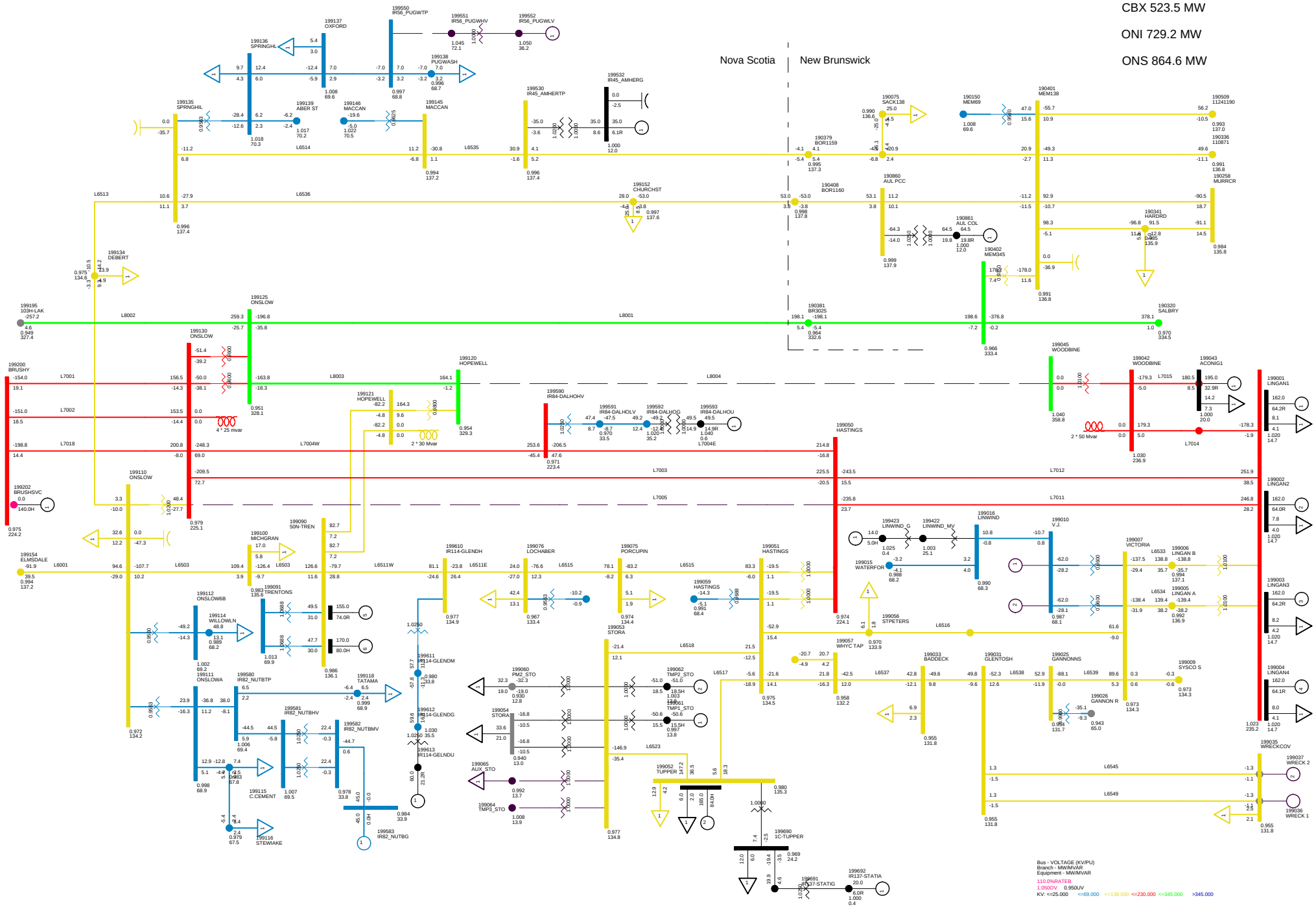

2013 WINTER PEAK NS IMPORT 200 MW
C61 DCT ON STRAIT CROSSING LOSE L8004-L7005 NO SPS
NORTHEASTERN NS WED, DEC 10 2008 11:32

Total Wind Gen: 140.6 MW
Gross Lingan 648.0 MW
Gross Pt Aconi 195.0 MW

Gross Tupper 165.0 MW
Gross Trenton 325.0 MW
Gross Tuft's Cove 378.1 MW

Gross Wreck Cove 0.0 MW
Gross Gas Turbine 24.0 MW
Gross Small Hydro 182.4 MW

Net Stora Load 168.3 MW
Total BMPC Load 75.5 MW

Figure ___

NSX -488.4 MW

CBX 249.7 MW

ONI 486.5 MW

ONS 863.1 MW

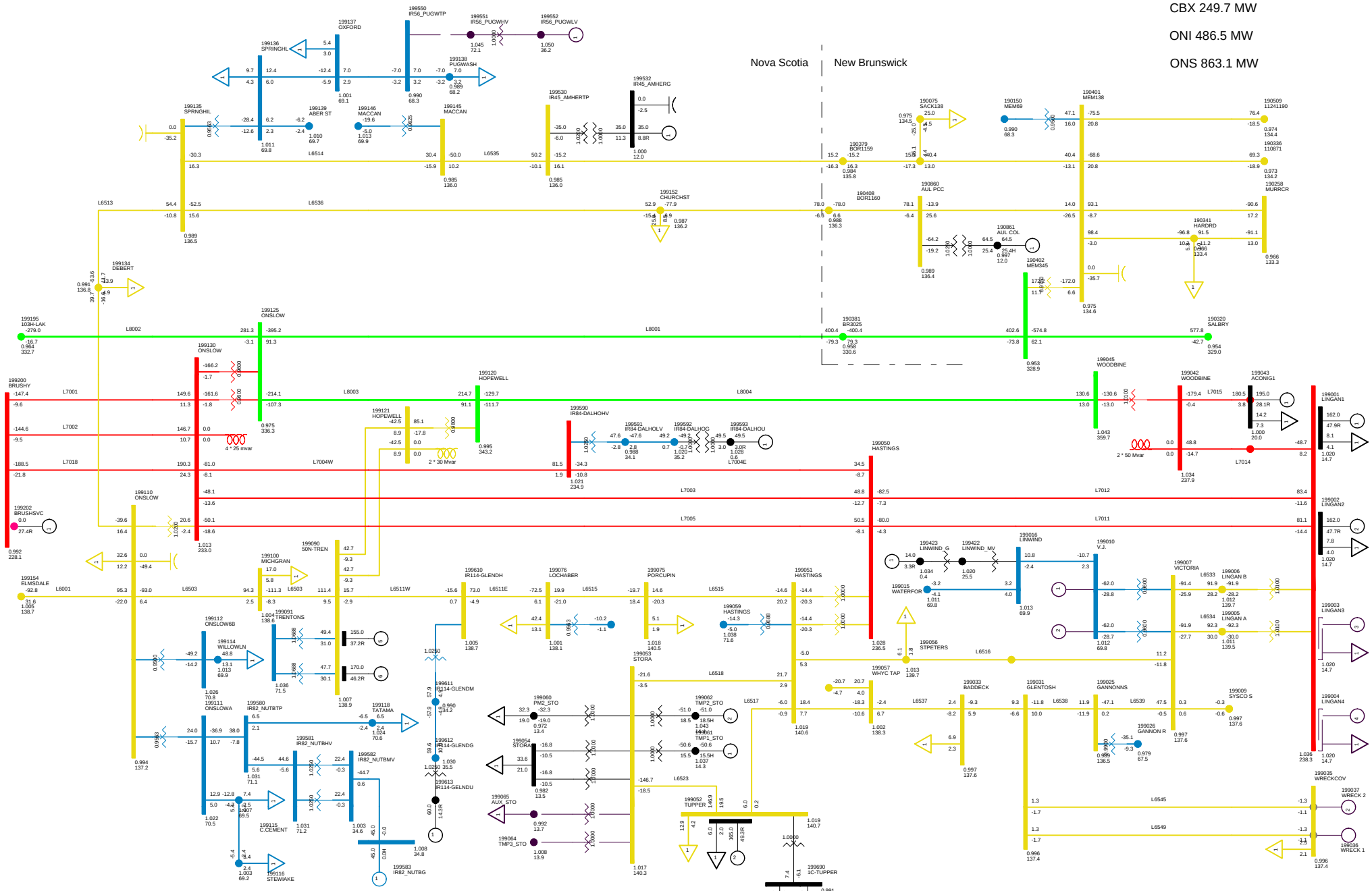

2013 WINTER PEAK NS IMPORT 200 MW
C62 FAULT ON BREAKER 88S-721 TRIPS LINGAN 3 AND 4
NORTHEASTERN NS WED, DEC 10 2008 11:32

Total Wind Gen: 140.6 MW
Gross Lingan 324.0 MW
Gross Pt Aconi 195.0 MW

Gross Tupper 165.0 MW
Gross Trenton 325.0 MW
Gross Tuft's Cove 378.1 MW

Gross Wreck Cove 0.0 MW
Gross Gas Turbine 24.0 MW
Gross Small Hydro 182.4 MW

Net Stora Load 168.3 MW
Total BMPC Load 75.5 MW

Figure ___

NSX -200.9 MW

CBX 543.5 MW

ONI 772.7 MW

ONS 863.3 MW

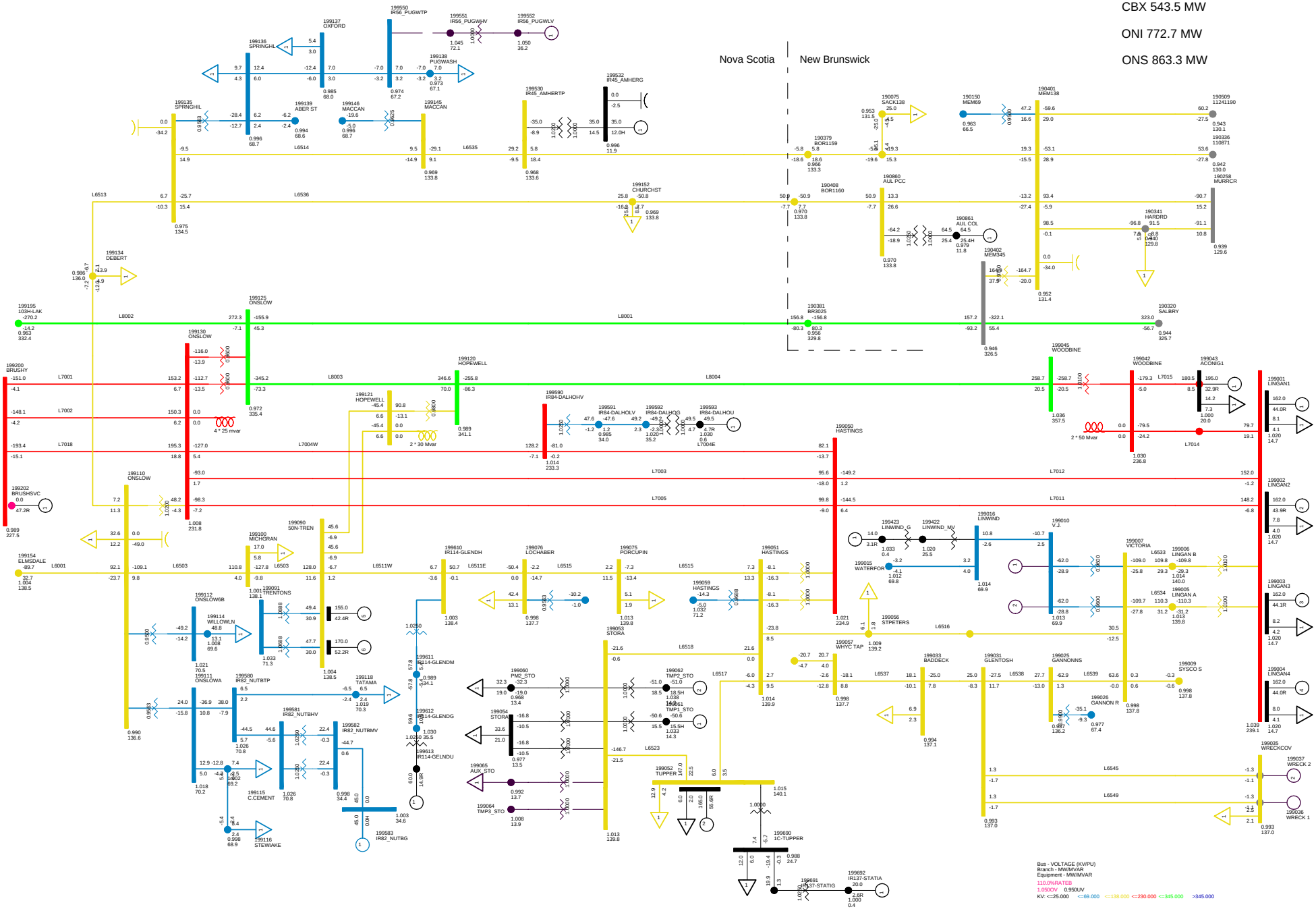

2013 WINTER PEAK NS IMPORT 200 MW
C64 FAULT ON BREAKER SALISBURY BREAKER SA3-4 TRIPS L3013 AND
NORTHEASTERN NS WED, DEC 10 2008 11:33

Total Wind Gen: 140.6 MW
Gross Lingan 648.0 MW
Gross Pt Aconi 195.0 MW

Gross Tupper 165.0 MW
Gross Trenton 325.0 MW
Gross Tuft's Cove 378.1 MW

Gross Wreck Cove 0.0 MW
Gross Gas Turbine 24.0 MW
Gross Small Hydro 182.4 MW

Net Stora Load 168.3 MW
Total BMPC Load 75.5 MW

Figure ___

NSX -249.7 MW

CBX 592.3 MW

ONI 560.4 MW

ONS 765.2 MW

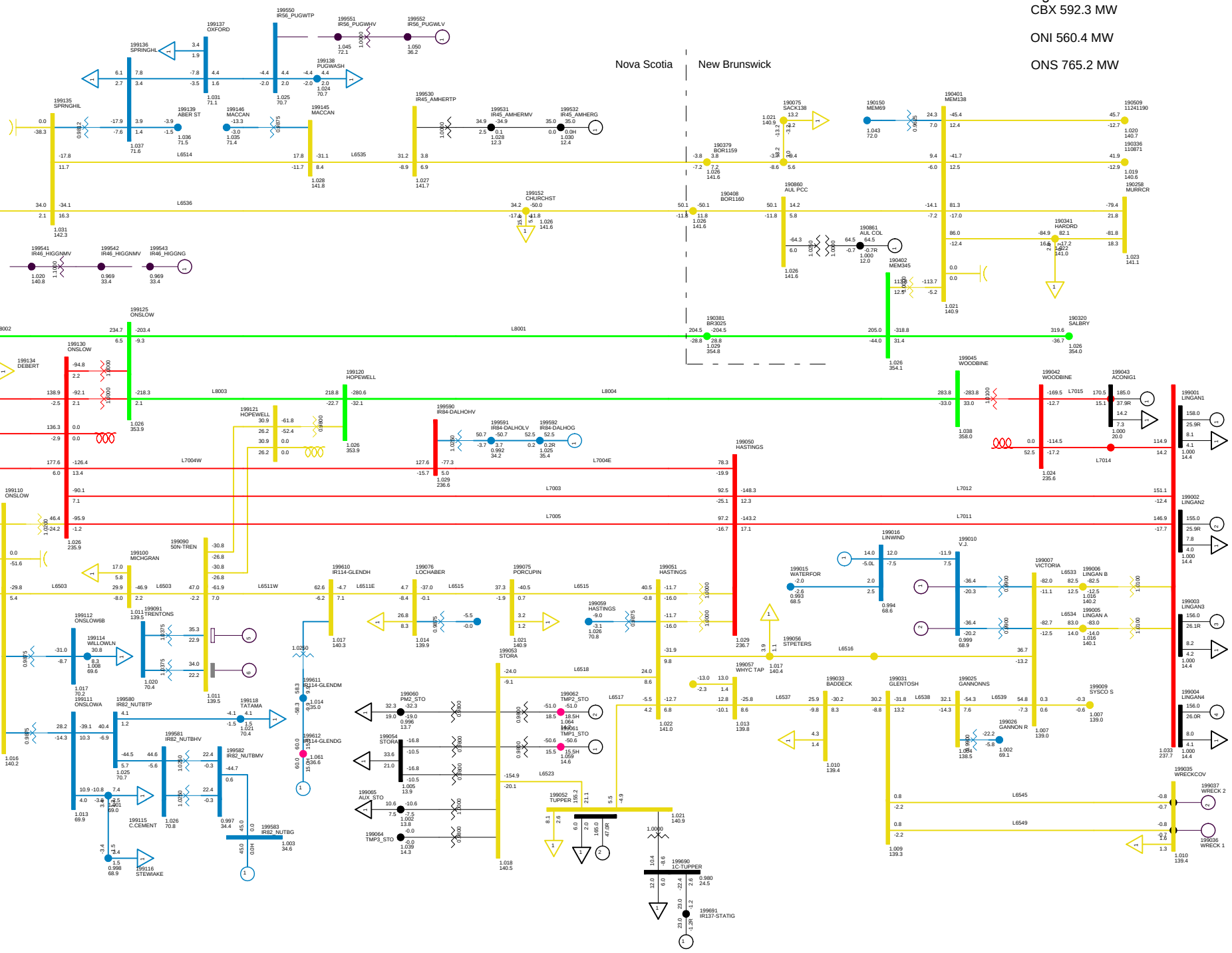

2010 SUMMER PEAK, NSLOAD=1700
NS-NB=-250; NB-NE=1000; CBX=592; ONI=560 ONS=765
NORTHEASTERN NS TUE, DEC 09 2008 22:34

Total Wind Gen: 290.1 MW | Gross Tupper 165.0 MW | Gross Wreck Cove 0.0 MW | Net Stora Load 178.9 MW
Gross Lingan 625.0 MW | Gross Trenton 0.0 MW | Gross Gas Turbine 0.0 MW | Total BMPC Load 108.5 MW
Gross Pt Aconi 185.0 MW | Gross Tuft's Cove 158.6 MW | Gross Small Hydro 42.9 MW

Bus - VOLTAGE (KV/PU)
Branch - MW/MVAR
Equipment - MW/MVAR
110.0%RATEA
1.050OV 0.950UV
KV: <=25.000 <=69.000 <=138.000 <=230.000 <=345.000 >345.000

Figure ___

NSX -287.4 MW

CBX 570.5 MW

ONI 524.5 MW

ONS 766.8 MW

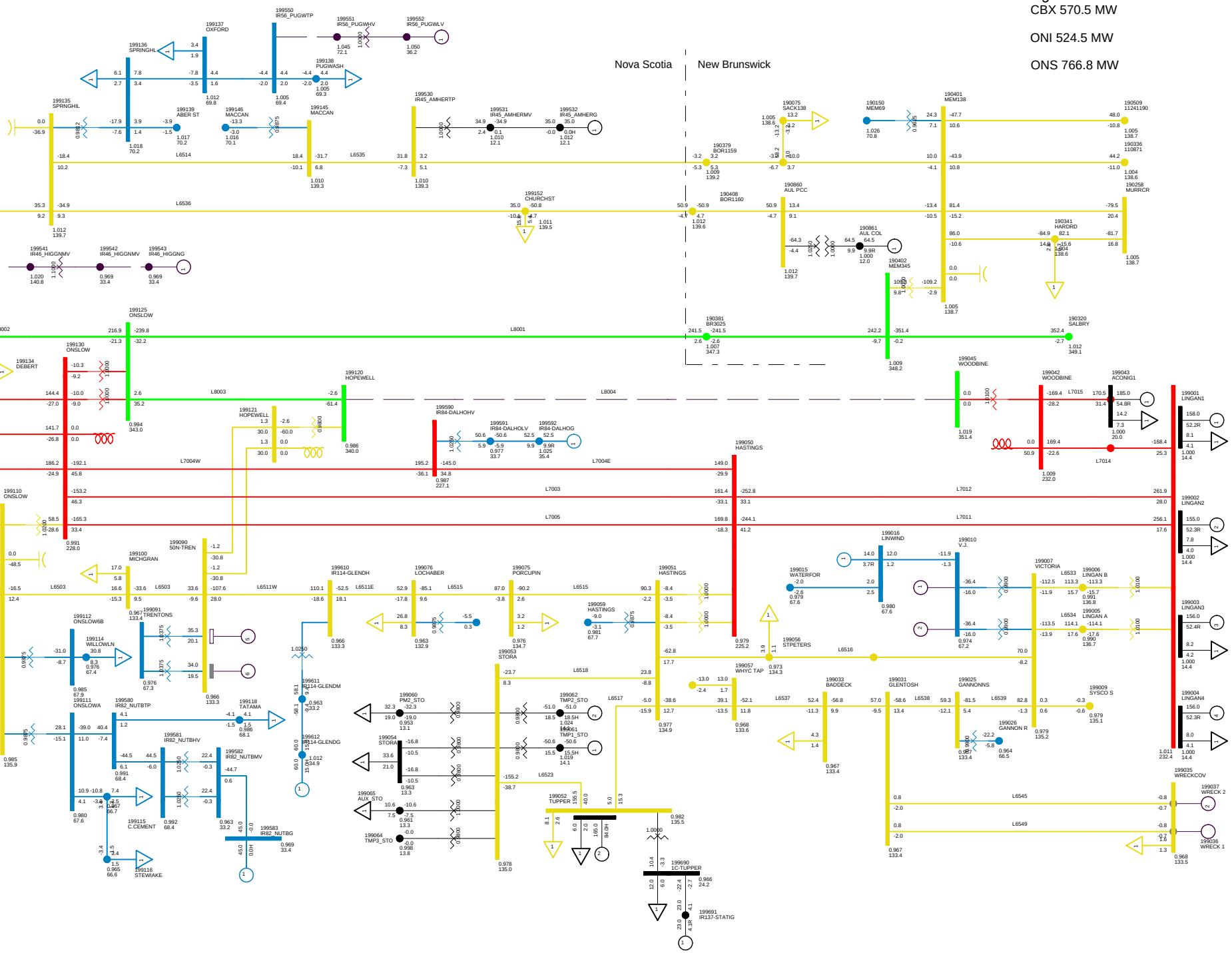

2013 SUMMER PEAK NS IMPORT 250 MW
C01 LOSE L8004 NO SPS
NORTHEASTERN NS TUE, DEC 09 2008 22:34

Total Wind Gen: 290.1 MW	Gross Tupper 165.0 MW	Gross Wreck Cove 0.0 MW	Net Stora Load 179.0 MW
Gross Lingan 625.0 MW	Gross Trenton 0.0 MW	Gross Gas Turbine 0.0 MW	Total BMPC Load 108.5 MW
Gross Pt Aconi 185.0 MW	Gross Tuft's Cove 158.6 MW	Gross Small Hydro 42.9 MW	

Bus - VOLTAGE (KV/PU)
Branch - MW/MVAR
Equipment - MW/MVAR
110.0%RATEA
1.050UV 0.950UV
KV: <=25.000 <=69.000 <=138.000 <=230.000 <=345.000 >345.000

Figure ___

NSX -262.8 MW

CBX 586.9 MW

ONI 548.0 MW

ONS 766.2 MW

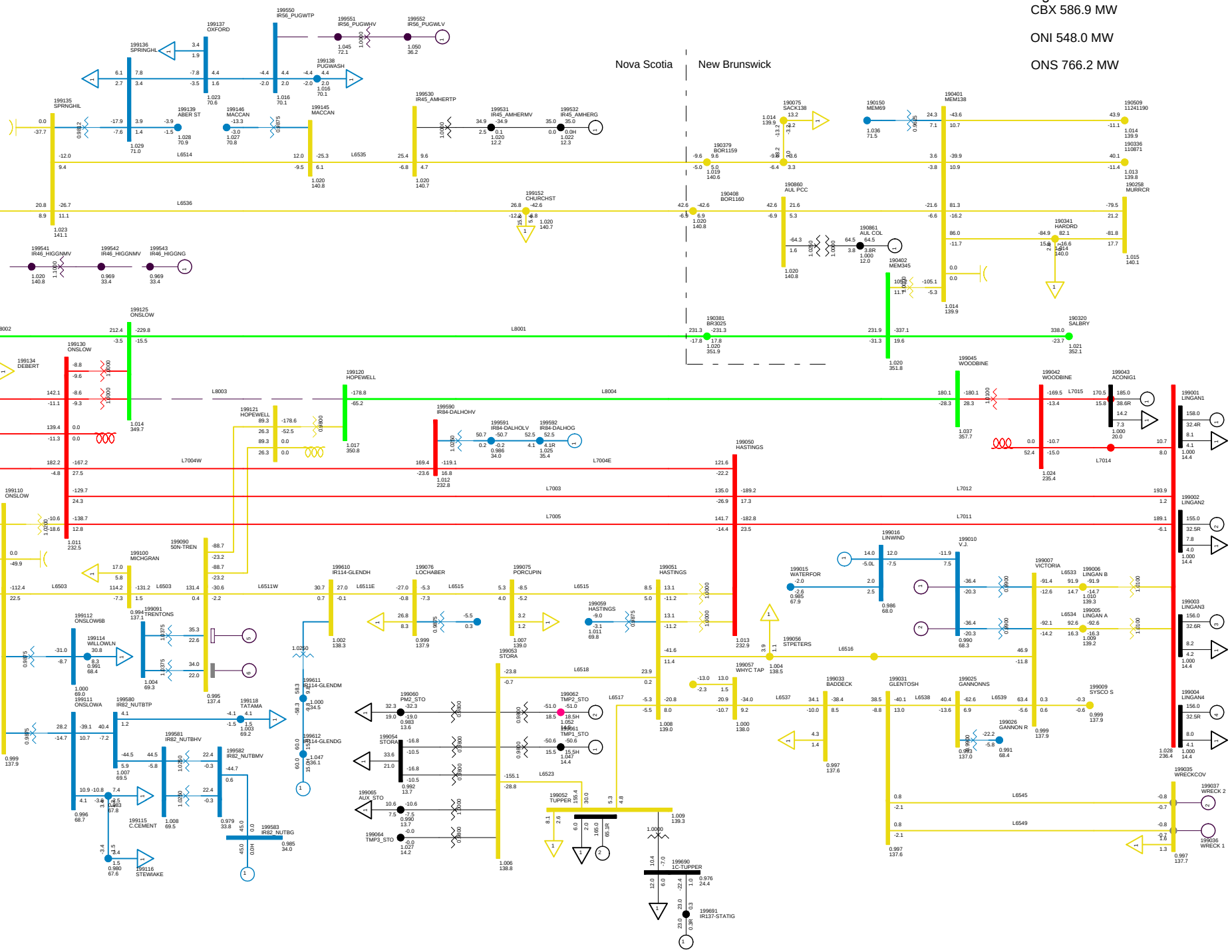

2013 SUMMER PEAK NS IMPORT 250 MW
C02 LOSE L8003 NO SPS
NORTHEASTERN NS TUE, DEC 09 2008 22:35

Total Wind Gen: 290.1 MW	Gross Tupper 165.0 MW	Gross Wreck Cove 0.0 MW	Net Stora Load 178.9 MW
Gross Lingan 625.0 MW	Gross Trenton 0.0 MW	Gross Gas Turbine 0.0 MW	Total BMPC Load 108.5 MW
Gross Pt Aconi 185.0 MW	Gross Tuft's Cove 158.6 MW	Gross Small Hydro 42.9 MW	

Bus - VOLTAGE (KV/PU)
Branch - MW/MVAR
Equipment - MW/MVAR
110.0%RATEA
1.0500V 0.950UV
KV: <=25.000 <=69.000 <=138.000 <=230.000 <=345.000 >345.000

Figure ___

NSX -260.6 MW

CBX 591.8 MW

ONI 559.3 MW

ONS 774.2 MW

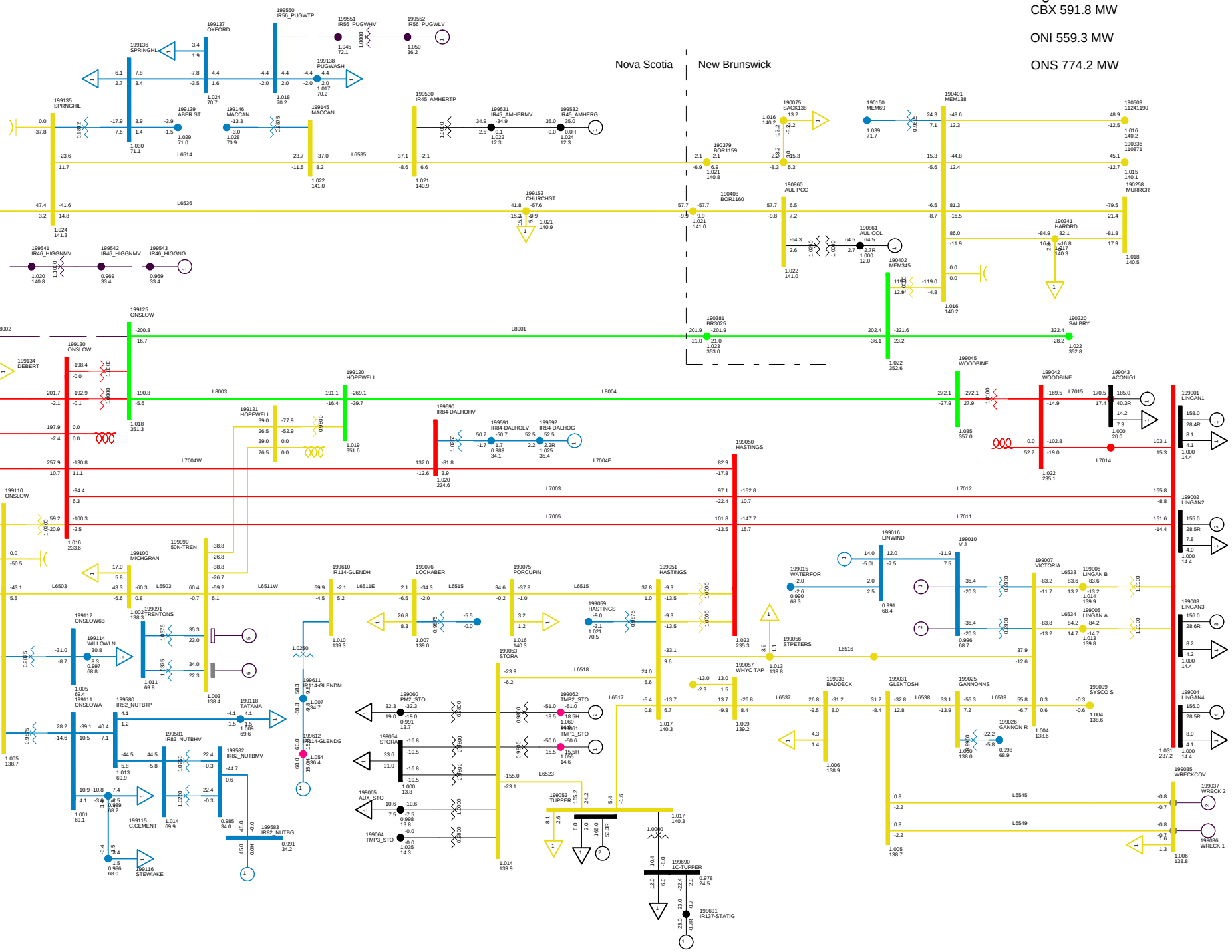

2013 SUMMER PEAK NS IMPORT 250 MW
C03 LOSE L8002
NORTHEASTERN NS TUE, DEC 09 2008 22:35

Total Wind Gen: 290.1 MW	Gross Tupper 165.0 MW	Gross Wreck Cove 0.0 MW	Net Stora Load 178.9 MW
Gross Lingan 625.0 MW	Gross Trenton 0.0 MW	Gross Gas Turbine 0.0 MW	Total BMPC Load 108.5 MW
Gross Pt Aconi 185.0 MW	Gross Tuft's Cove 158.6 MW	Gross Small Hydro 42.9 MW	

Bus - VOLTAGE (KV/PU)
Branch - MW/MVAR
Equipment - MW/MVAR
110.0%RATEA
1.050OV 0.950UV
KV: <=25.000 <=69.000 <=138.000 <=230.000 <=345.000 >345.000

Figure ___

NSX -298.5 MW

CBX 591.7 MW

ONI 558.9 MW

ONS 769.2 MW

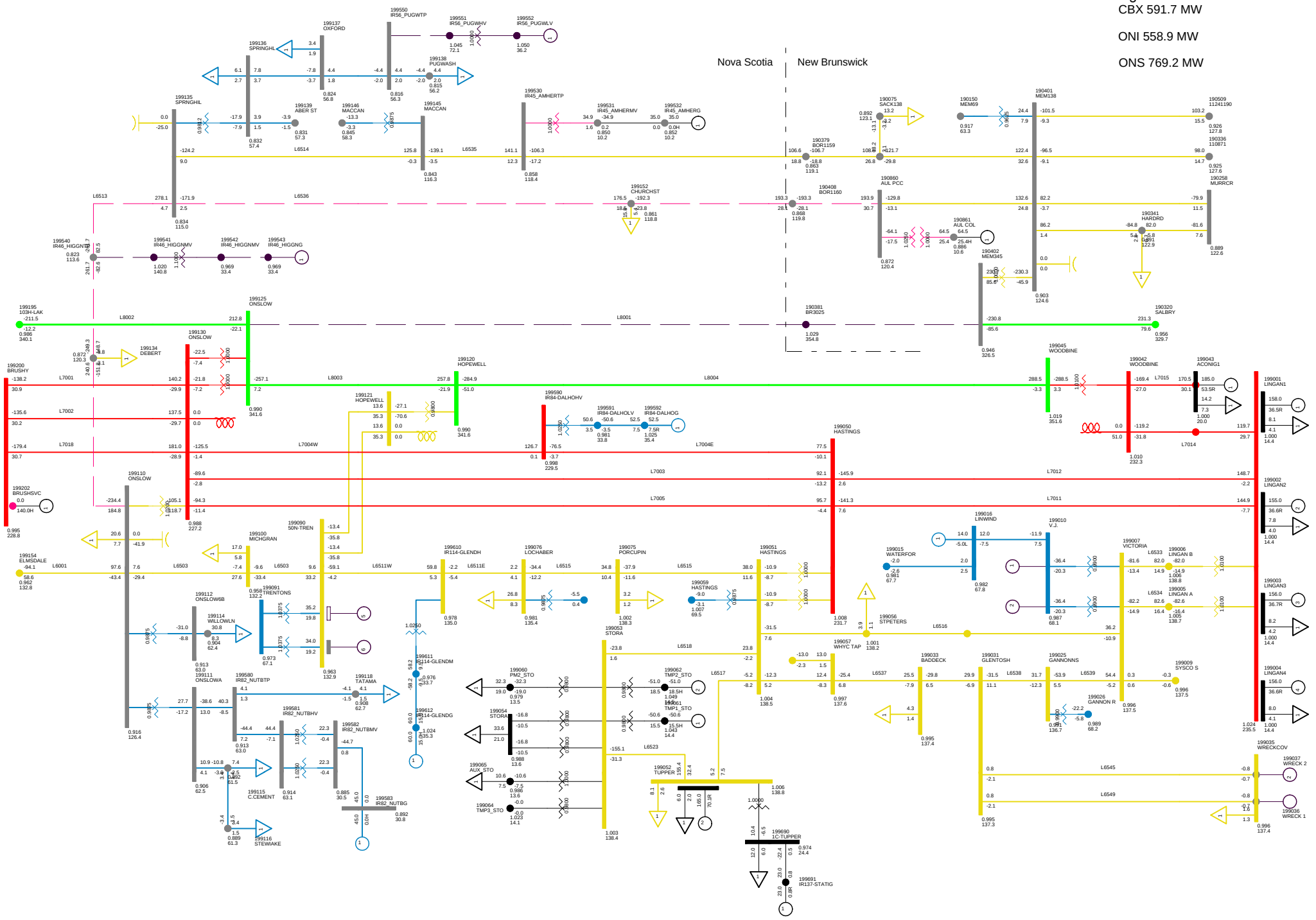

2013 SUMMER PEAK NS IMPORT 250 MW
C04 LOSE L8001 NO SPS
NORTHEASTERN NS TUE, DEC 09 2008 22:35

Total Wind Gen: 290.1 MW | Gross Tupper 165.0 MW | Gross Wreck Cove 0.0 MW | Net Stora Load 178.9 MW
Gross Lingan 625.0 MW | Gross Trenton 0.0 MW | Gross Gas Turbine 0.0 MW | Total BMPC Load 108.5 MW
Gross Pt Aconi 185.0 MW | Gross Tuft's Cove 158.6 MW | Gross Small Hydro 42.9 MW

Bus - VOLTAGE (KV/PU)
Branch - MW/MVAR
Equipment - MW/MVAR
110.0%RATEA
1.0500V 0.950UV
KV: <=25.000 <=69.000 <=138.000 <=230.000 <=345.000 >345.000

Figure ___

NSX -249.7 MW

CBX 592.3 MW

ONI 560.4 MW

ONS 765.2 MW

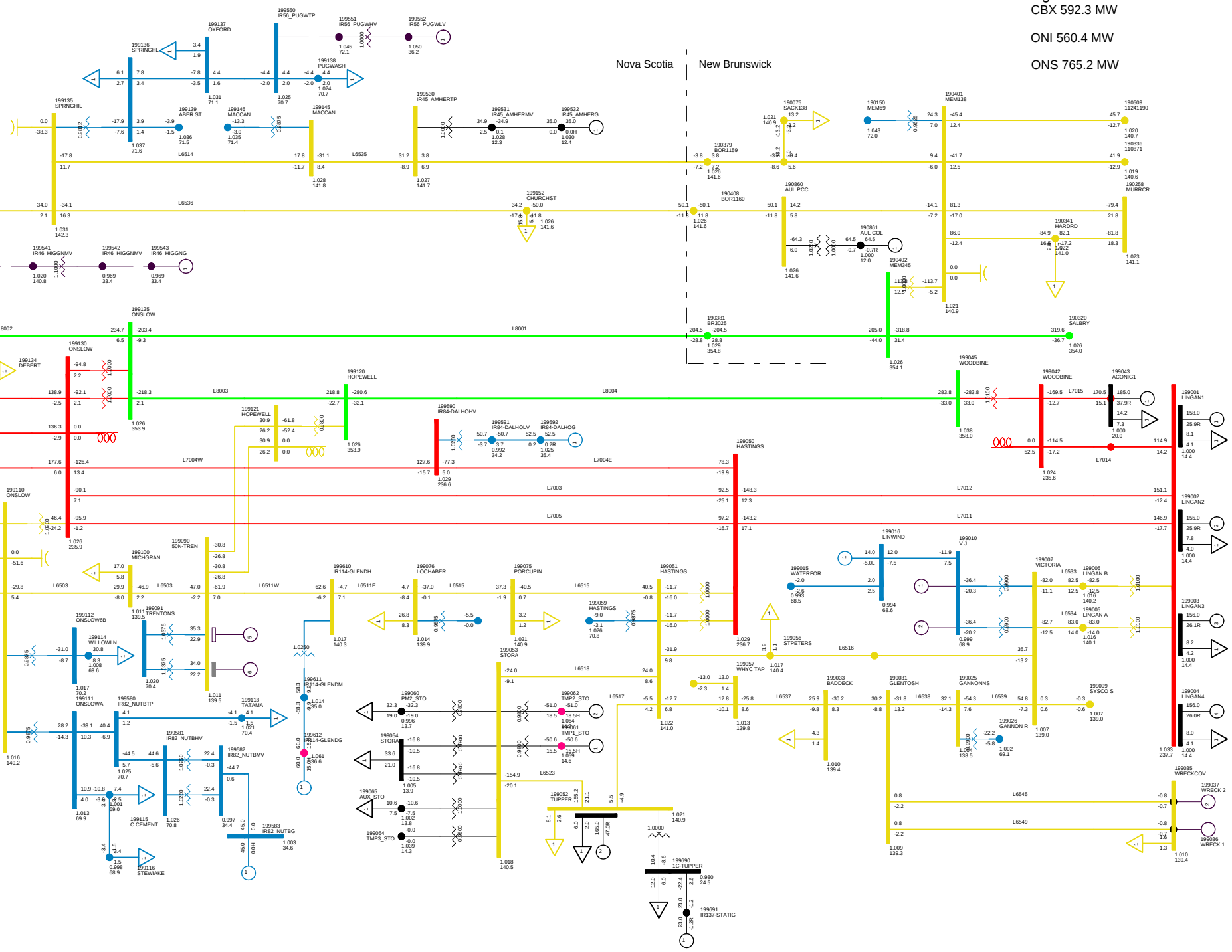

2010 SUMMER PEAK, NSLOAD=1700
NS-NB=-250; NB-NE=1000; CBX=592; ONI=560 ONS=765
NORTHEASTERN NS TUE, DEC 09 2008 22:36

Total Wind Gen: 290.1 MW | Gross Tupper 165.0 MW | Gross Wreck Cove 0.0 MW | Net Stora Load 178.9 MW
Gross Lingan 625.0 MW | Gross Trenton 0.0 MW | Gross Gas Turbine 0.0 MW | Total BMPC Load 108.5 MW
Gross Pt Aconi 185.0 MW | Gross Tuft's Cove 158.6 MW | Gross Small Hydro 42.9 MW

Bus - VOLTAGE (KV/PU)
Branch - MW/MVAR
Equipment - MW/MVAR
110.0%RATEA
1.0500V 0.950UV
KV: <=25.000 <=69.000 <=138.000 <=230.000 <=345.000 >345.000

Figure ___

NSX -254.7 MW

CBX 587.4 MW

ONI 555.7 MW

ONS 765.3 MW

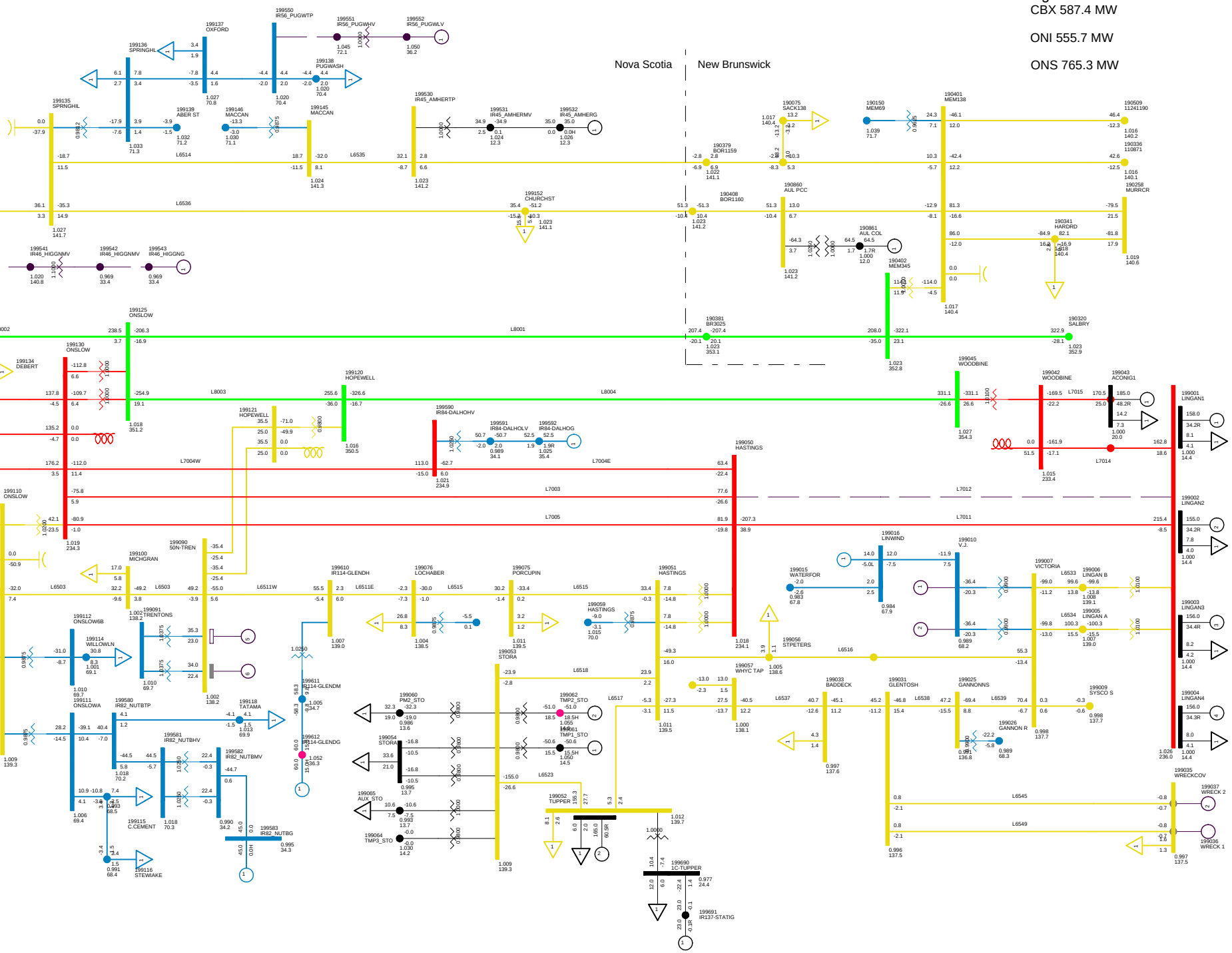

2013 SUMMER PEAK NS IMPORT 250 MW
C05 LOSE L7012 NO SPS
NORTHEASTERN NS TUE, DEC 09 2008 22:36

Total Wind Gen: 290.1 MW	Gross Tupper 165.0 MW	Gross Wreck Cove 0.0 MW	Net Stora Load 178.9 MW
Gross Lingan 625.0 MW	Gross Trenton 0.0 MW	Gross Gas Turbine 0.0 MW	Total BMPC Load 108.5 MW
Gross Pt Aconi 185.0 MW	Gross Tuft's Cove 158.6 MW	Gross Small Hydro 42.9 MW	

Bus - VOLTAGE (KV/PU)
Branch - MW/MVAR
Equipment - MW/MVAR
110.0%RATEA
1.0500V 0.950UV
KV: <=25.000 <=69.000 <=138.000 <=230.000 <=345.000 >345.000

Figure ___

NSX -252.5 MW

CBX 589.6 MW

ONI 557.9 MW

ONS 765.3 MW

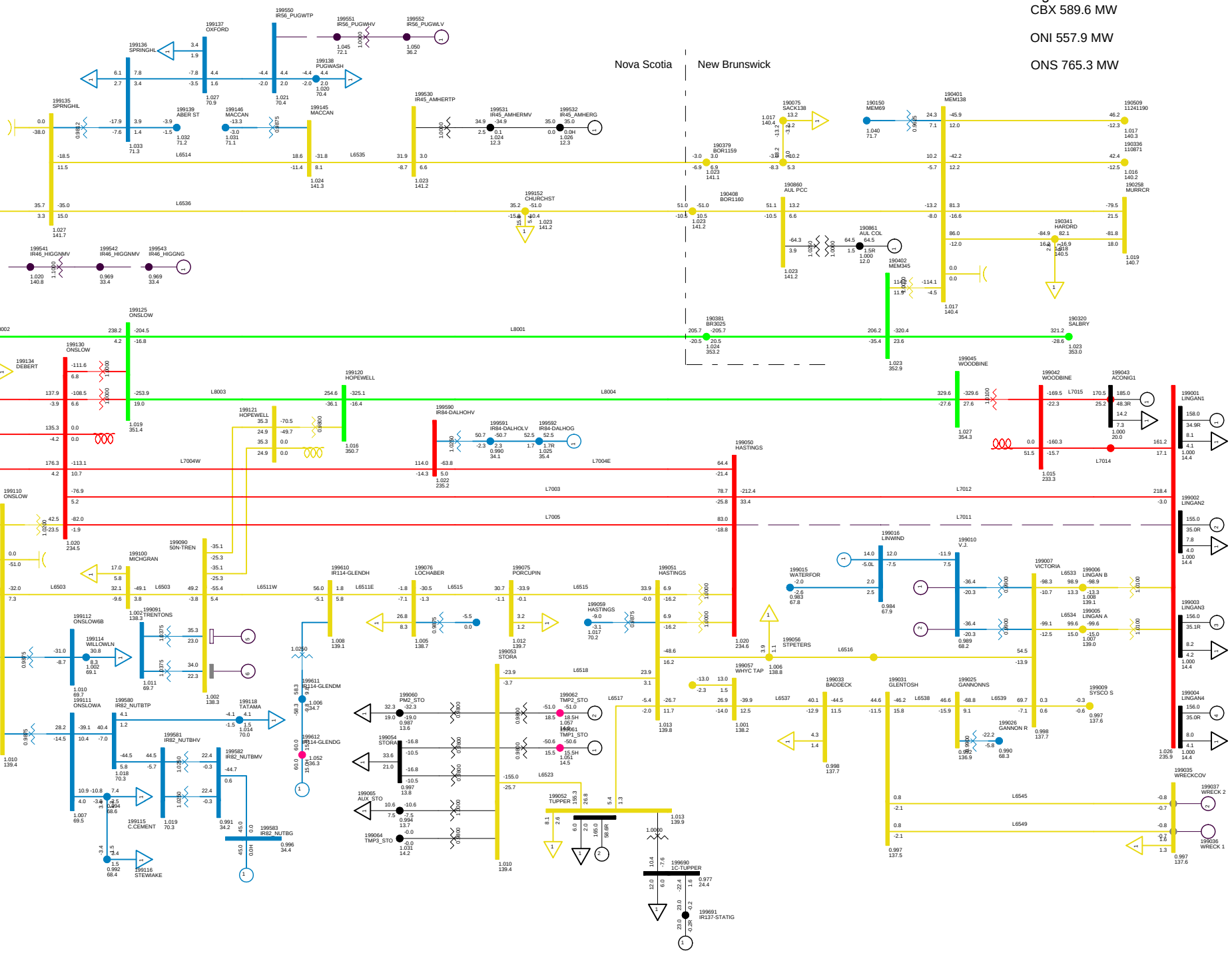

2013 SUMMER PEAK NS IMPORT 250 MW
C06 LOSE L7011
NORTHEASTERN NS TUE, DEC 09 2008 22:36

Total Wind Gen: 290.1 MW	Gross Tupper 165.0 MW	Gross Wreck Cove 0.0 MW	Net Stora Load 178.9 MW
Gross Lingan 625.0 MW	Gross Trenton 0.0 MW	Gross Gas Turbine 0.0 MW	Total BMPC Load 108.5 MW
Gross Pt Aconi 185.0 MW	Gross Tuft's Cove 158.6 MW	Gross Small Hydro 42.9 MW	

Bus - VOLTAGE (KV/PU)
Branch - MW/MVAR
Equipment - MW/MVAR
110.0%RATEA
1.0500V 0.950UV
KV: <=25.000 <=69.000 <=138.000 <=230.000 <=345.000 >345.000

Figure ___

NSX -253.1 MW

CBX 593.0 MW

ONI 557.3 MW

ONS 765.4 MW

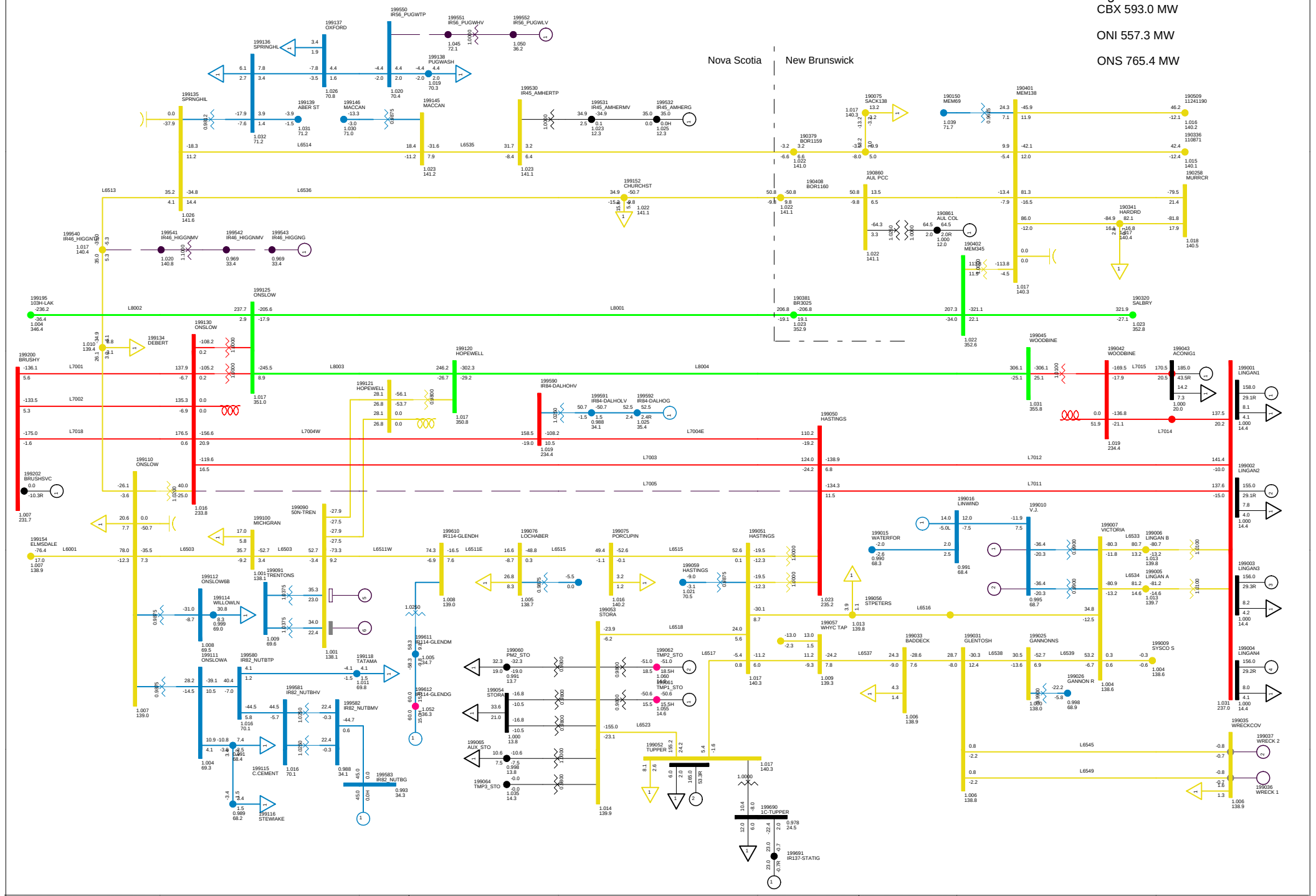

2013 SUMMER PEAK NS IMPORT 250 MW
C07 LOSE L7005
NORTHEASTERN NS TUE, DEC 09 2008 22:36

Total Wind Gen: 290.1 MW | Gross Tupper 165.0 MW | Gross Wreck Cove 0.0 MW | Net Stora Load 178.9 MW
Gross Lingan 625.0 MW | Gross Trenton 0.0 MW | Gross Gas Turbine 0.0 MW | Total BMPC Load 108.5 MW
Gross Pt Aconi 185.0 MW | Gross Tuft's Cove 158.6 MW | Gross Small Hydro 42.9 MW

Bus - VOLTAGE (KV/PU)
Branch - MW/MVAR
Equipment - MW/MVAR
110.0%RATEA
1.050OV 0.950UV
KV: <=25.000 <=69.000 <=138.000 <=230.000 <=345.000 >345.000

Figure ___

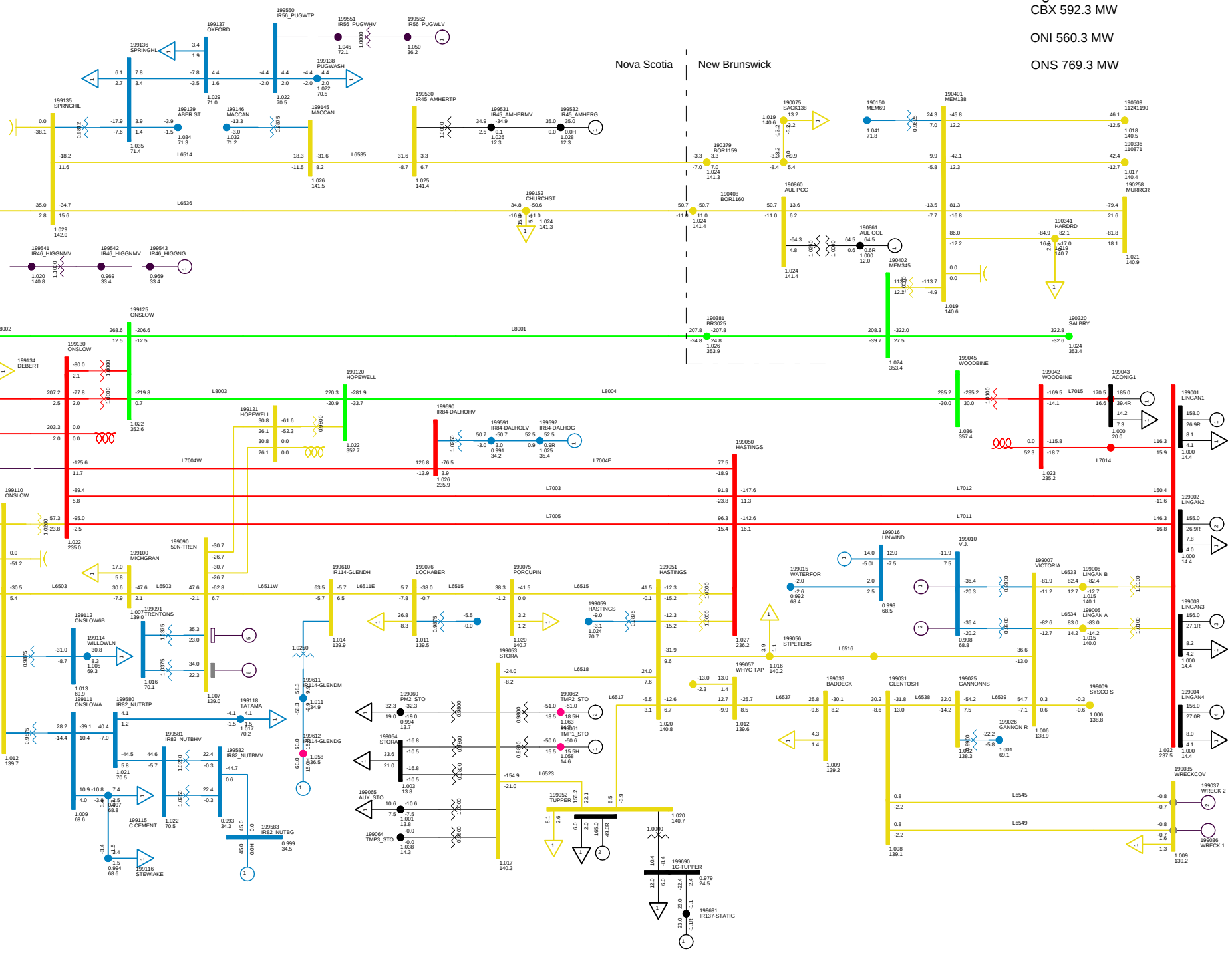

2013 SUMMER PEAK NS IMPORT 250 MW
C08 LOSE L7018
NORTHEASTERN NS TUE, DEC 09 2008 22:36

Total Wind Gen: 290.1 MW | Gross Tupper 165.0 MW | Gross Wreck Cove 0.0 MW | Net Stora Load 178.9 MW
Gross Lingan 625.0 MW | Gross Trenton 0.0 MW | Gross Gas Turbine 0.0 MW | Total BMPC Load 108.5 MW
Gross Pt Aconi 185.0 MW | Gross Tuft's Cove 158.6 MW | Gross Small Hydro 42.9 MW

Bus - VOLTAGE (KV/PU)
Branch - MW/MVAR
Equipment - MW/MVAR
110.0%RATEA
1.0500V 0.950UV
KV: <=25.000 <=69.000 <=138.000 <=230.000 <=345.000 >345.000

Figure ___

Total Wind Gen: 290.1 MW
Gross Tupper 165.0 MW
Gross Wreck Cove 0.0 MW
Gross Lingan 625.0 MW
Gross Trenton 0.0 MW
Gross Gas Turbine 0.0 MW
Gross Pt Aconi 185.0 MW
Gross Tuft's Cove 158.6 MW
Gross Small Hydro 42.9 MW
Net Stora Load 178.9 MW
Total BMPC Load 108.5 MW

NSX -251.4 MW
CBX 592.3 MW
ONI 560.2 MW
ONS 766.7 MW

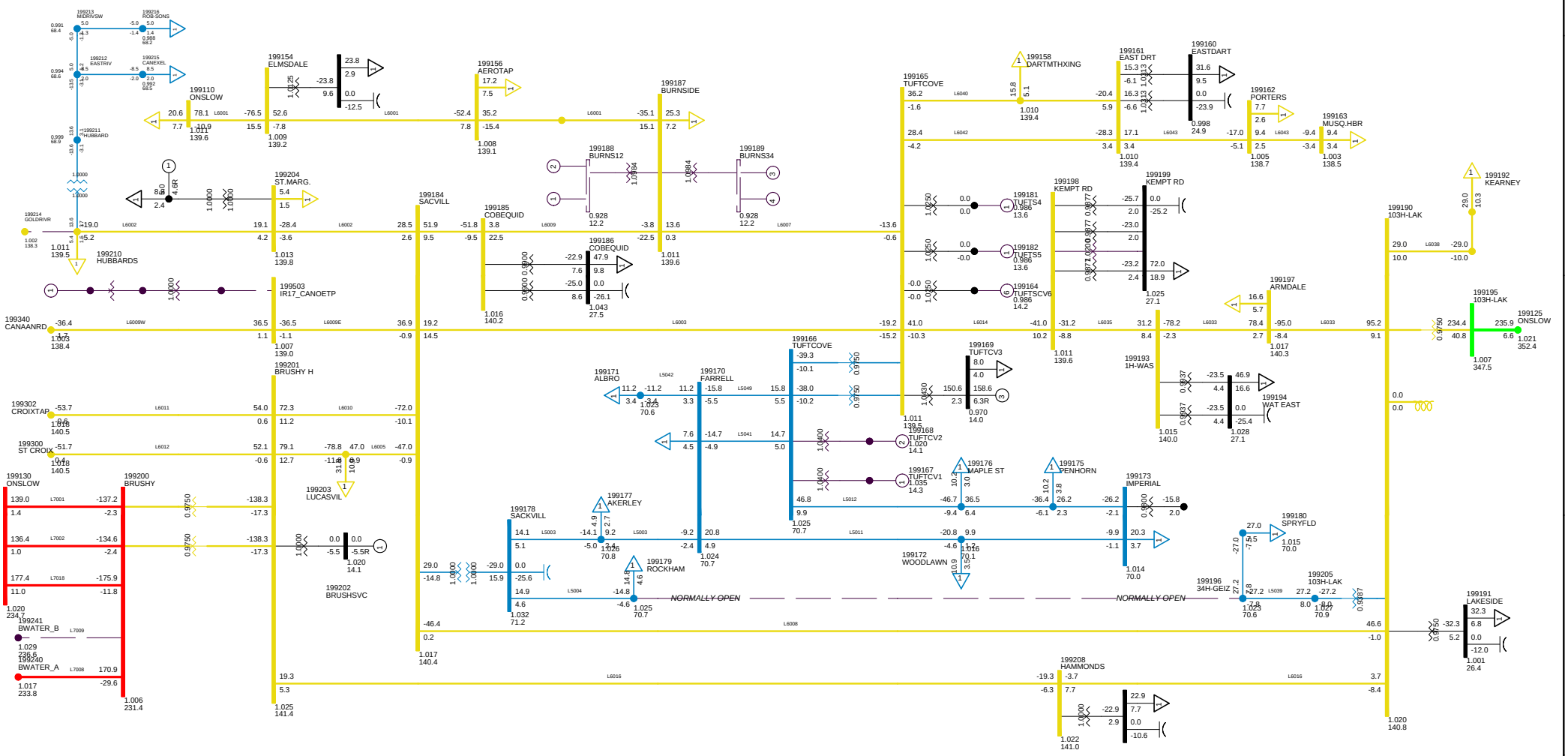

2013 SUMMER PEAK NS IMPORT 250 MW
C09 LOSE L7009
METRO ZONE TUE, DEC 09 2008 22:37

Bus - VOLTAGE (KV/PU)
Branch - MW/MVAR
Equipment - MW/MVAR
100.0%RATEA
1.050OV 0.950UV
KV: <=30.000 <=69.000 <=138.000 <=230.000 <=345.000 >345.000

Figure __

NSX -253.4 MW

CBX 593.2 MW

ONI 557.0 MW

ONS 765.4 MW

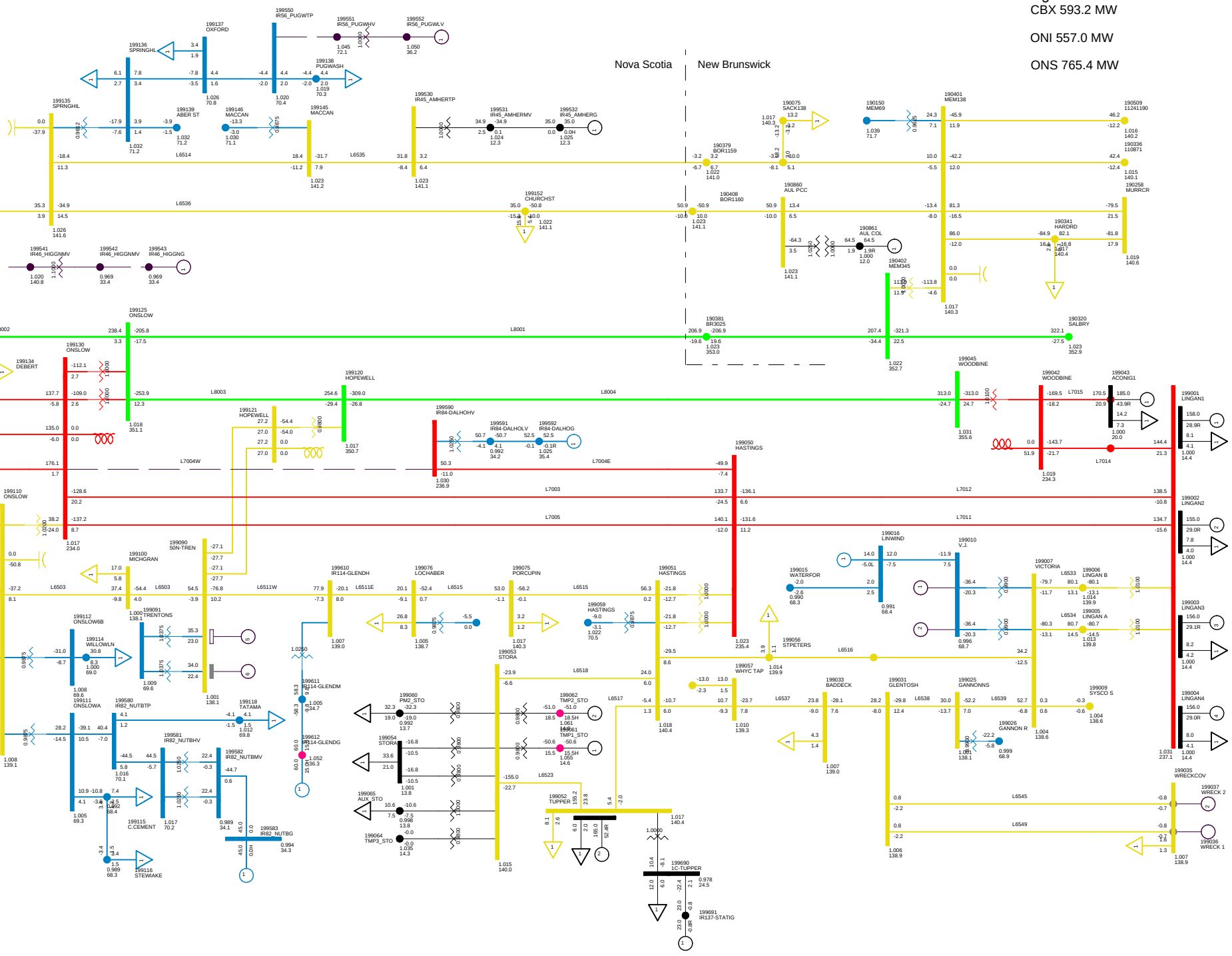

2013 SUMMER PEAK NS IMPORT 250 MW
C10 LOSE L7004 WEST
NORTHEASTERN NS TUE, DEC 09 2008 22:37

Total Wind Gen: 290.1 MW	Gross Tupper 165.0 MW	Gross Wreck Cove 0.0 MW	Net Stora Load 178.9 MW
Gross Lingan 625.0 MW	Gross Trenton 0.0 MW	Gross Gas Turbine 0.0 MW	Total BMPC Load 108.5 MW
Gross Pt Aconi 185.0 MW	Gross Tuft's Cove 158.6 MW	Gross Small Hydro 42.9 MW	

Bus - VOLTAGE (KV/PU)
Branch - MW/MVAR
Equipment - MW/MVAR
110.0%RATEA
1.0500V 0.950UV
KV: <=25.000 <=69.000 <=138.000 <=230.000 <=345.000 >345.000

Figure ___

NSX -259.0 MW

CBX 586.4 MW

ONI 551.4 MW

ONS 765.4 MW

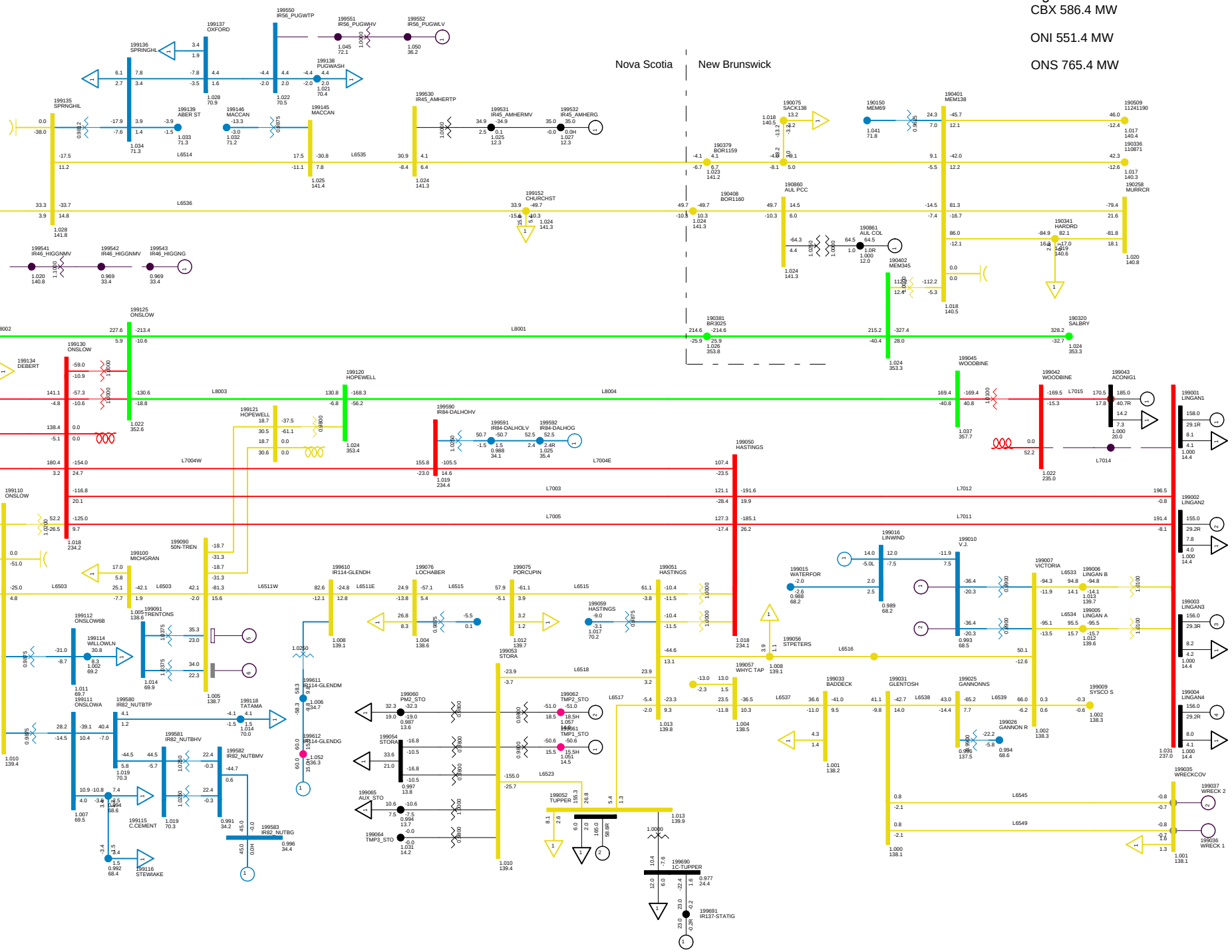

2013 SUMMER PEAK NS IMPORT 250 MW
C11 LOSE L7014
NORTHEASTERN NS TUE, DEC 09 2008 22:37

Total Wind Gen: 290.1 MW | Gross Tupper 165.0 MW | Gross Wreck Cove 0.0 MW | Net Stora Load 178.9 MW
Gross Lingan 625.0 MW | Gross Trenton 0.0 MW | Gross Gas Turbine 0.0 MW | Total BMPC Load 108.5 MW
Gross Pt Aconi 185.0 MW | Gross Tuft's Cove 158.6 MW | Gross Small Hydro 42.9 MW

Bus - VOLTAGE (KV/PU)
Branch - MW/MVAR
Equipment - MW/MVAR
110.0%RATEA
1.0500V 0.950UV
KV: <=25.000 <=69.000 <=138.000 <=230.000 <=345.000 >345.000

Figure ___

NSX -249.7 MW

CBX 592.3 MW

ONI 560.4 MW

ONS 765.2 MW

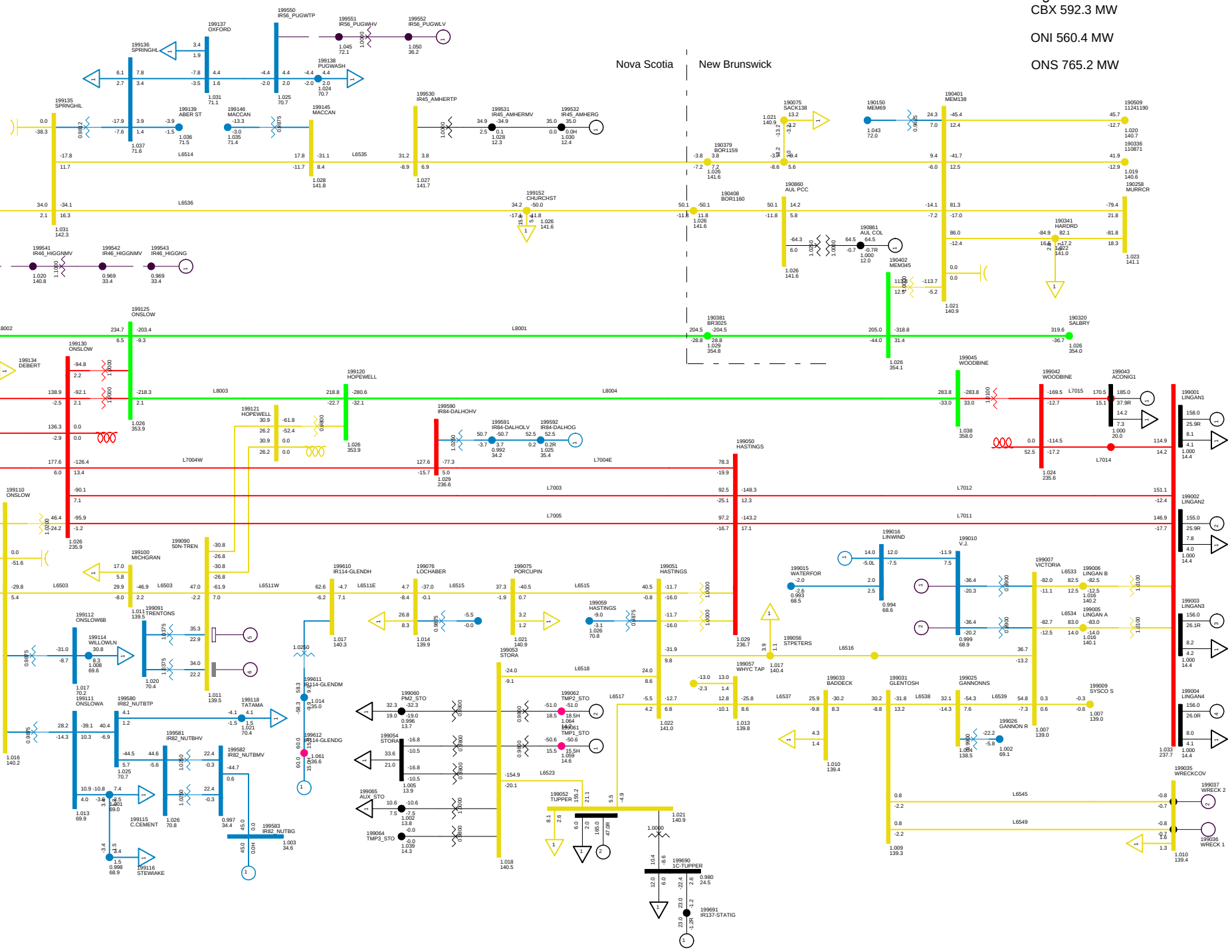

2010 SUMMER PEAK, NSLOAD=1700
NS-NB=-250; NB-NE=1000; CBX=592; ONI=560 ONS=765
NORTHEASTERN NS TUE, DEC 09 2008 22:37

Total Wind Gen: 290.1 MW	Gross Tupper 165.0 MW	Gross Wreck Cove 0.0 MW	Net Stora Load 178.9 MW
Gross Lingan 625.0 MW	Gross Trenton 0.0 MW	Gross Gas Turbine 0.0 MW	Total BMPC Load 108.5 MW
Gross Pt Aconi 185.0 MW	Gross Tuft's Cove 158.6 MW	Gross Small Hydro 42.9 MW	

Bus - VOLTAGE (KV/PU)
Branch - MW/MVAR
Equipment - MW/MVAR

110.0%RATEA
1.050OV 0.950UV
KV: <=25.000 <=69.000 <=138.000 <=230.000 <=345.000 >345.000

Figure ___

NSX -232.5 MW

CBX 592.3 MW

ONI 577.4 MW

ONS 765.0 MW

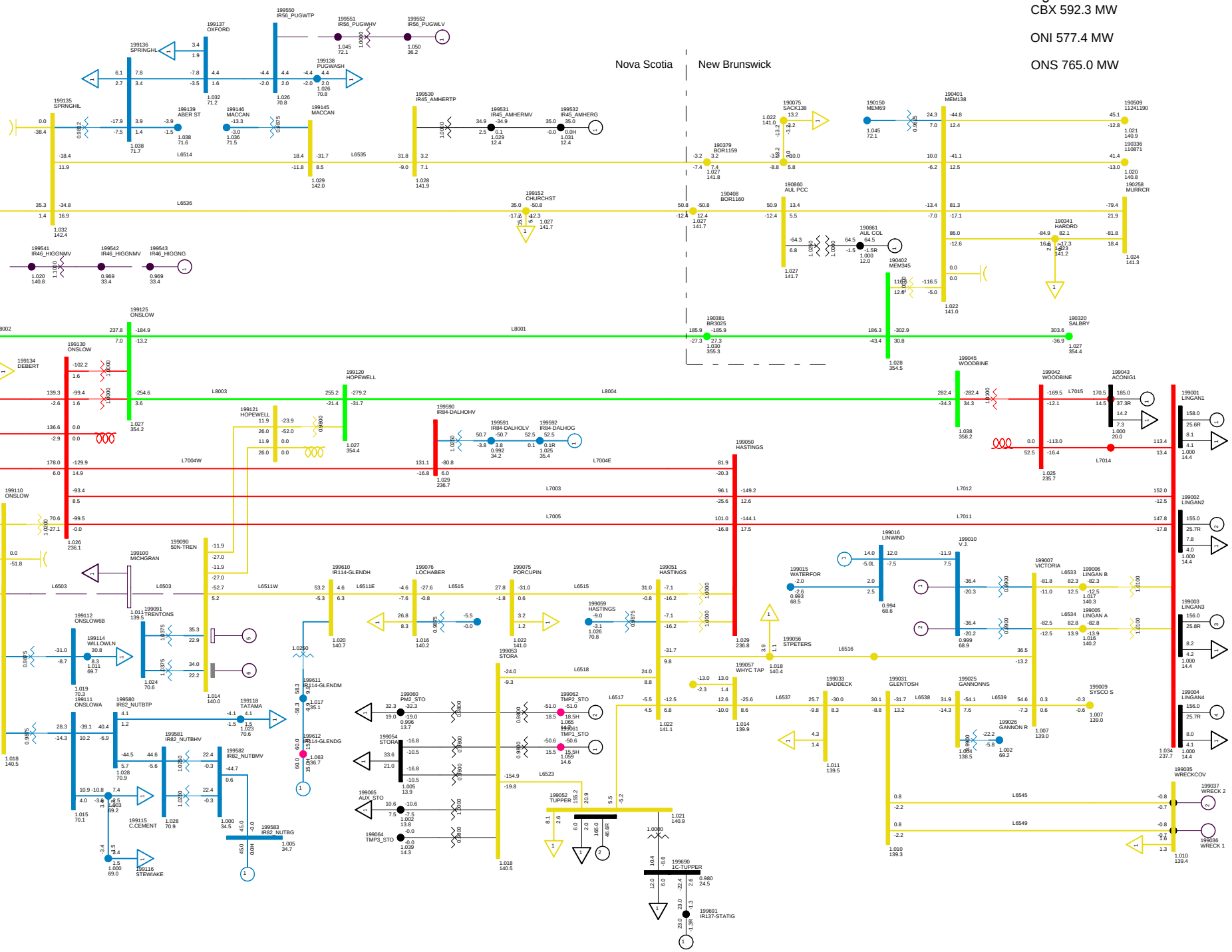

2013 SUMMER PEAK NS IMPORT 250 MW
C12 LOSE 6503
NORTHEASTERN NS TUE, DEC 09 2008 22:37

Total Wind Gen: 290.1 MW | Gross Tupper 165.0 MW | Gross Wreck Cove 0.0 MW | Net Stora Load 178.9 MW
Gross Lingan 625.0 MW | Gross Trenton 0.0 MW | Gross Gas Turbine 0.0 MW | Total BMPC Load 108.5 MW
Gross Pt Aconi 185.0 MW | Gross Tuft's Cove 158.6 MW | Gross Small Hydro 42.9 MW

Bus - VOLTAGE (KV/PU)
Branch - MW/MVAR
Equipment - MW/MVAR
110.0%RATEA
1.0500V 0.950UV
KV: <=25.000 <=69.000 <=138.000 <=230.000 <=345.000 >345.000

Figure ___

NSX -246.9 MW

CBX 592.8 MW

ONI 563.2 MW

ONS 765.2 MW

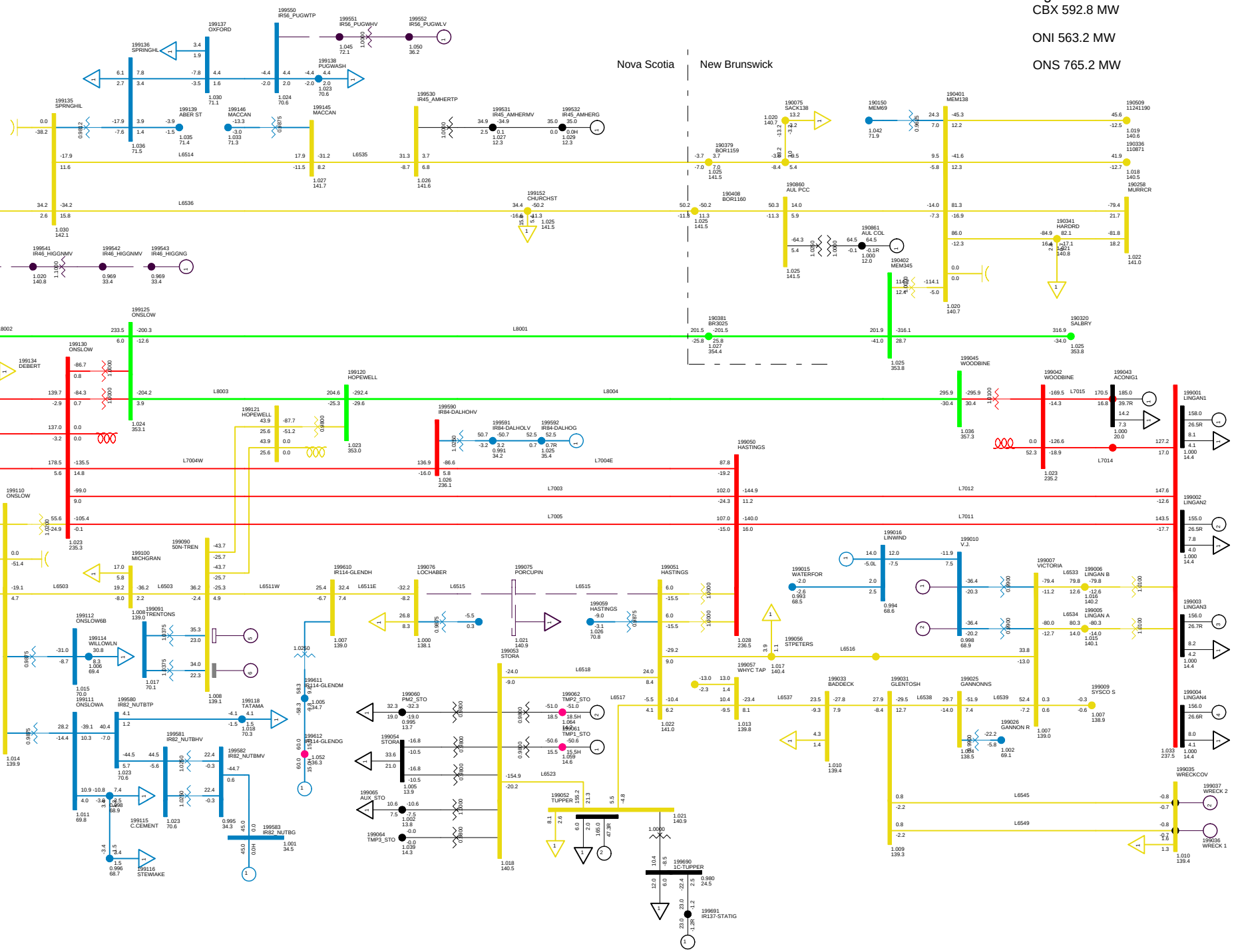

2013 SUMMER PEAK NS IMPORT 250 MW
C13 LOSE L6511
NORTHEASTERN NS TUE, DEC 09 2008 22:37

Total Wind Gen: 290.1 MW | Gross Tupper 165.0 MW | Gross Wreck Cove 0.0 MW | Net Stora Load 178.9 MW
Gross Lingan 625.0 MW | Gross Trenton 0.0 MW | Gross Gas Turbine 0.0 MW | Total BMPC Load 108.5 MW
Gross Pt Aconi 185.0 MW | Gross Tuft's Cove 158.6 MW | Gross Small Hydro 42.9 MW

Bus - VOLTAGE (KV/PU)
Branch - MW/MVAR
Equipment - MW/MVAR
110.0%RATEA
1.0500V 0.950UV
KV: <=25.000 <=69.000 <=138.000 <=230.000 <=345.000 >345.000

Figure ___

NSX -249.6 MW

CBX 592.4 MW

ONI 560.5 MW

ONS 765.2 MW

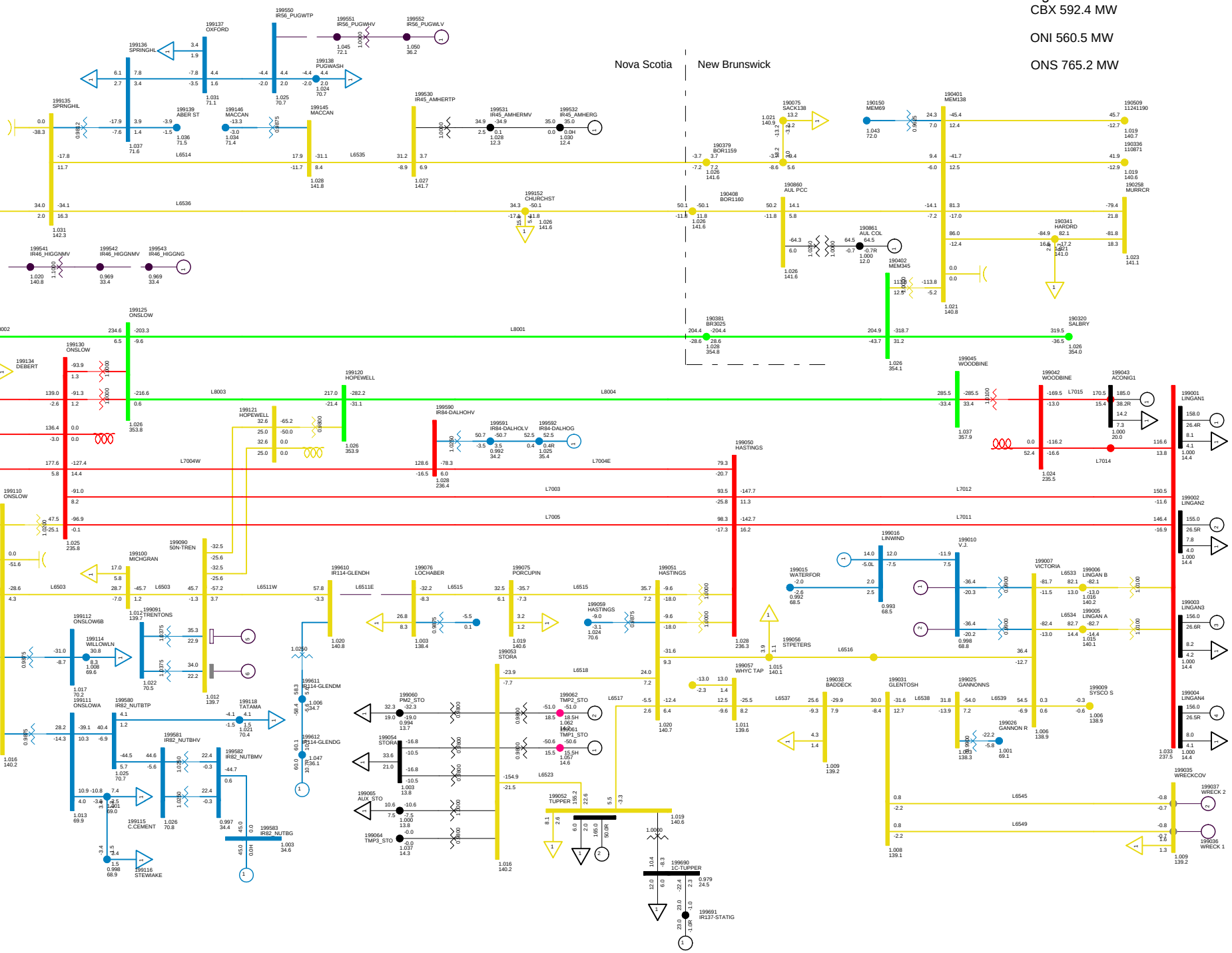

2013 SUMMER PEAK NS IMPORT 250 MW
C14 LOSE L6511E
NORTHEASTERN NS TUE, DEC 09 2008 22:37

Total Wind Gen: 290.1 MW | Gross Tupper 165.0 MW | Gross Wreck Cove 0.0 MW | Net Stora Load 178.9 MW
Gross Lingan 625.0 MW | Gross Trenton 0.0 MW | Gross Gas Turbine 0.0 MW | Total BMPC Load 108.5 MW
Gross Pt Aconi 185.0 MW | Gross Tuft's Cove 158.6 MW | Gross Small Hydro 42.9 MW

Bus - VOLTAGE (KV/PU)
Branch - MW/MVAR
Equipment - MW/MVAR
110.0%RATEA
1.0500V 0.950UV
KV: <=25.000 <=69.000 <=138.000 <=230.000 <=345.000 >345.000

Figure ___

NSX -251.2 MW

CBX 593.0 MW

ONI 559.1 MW

ONS 765.3 MW

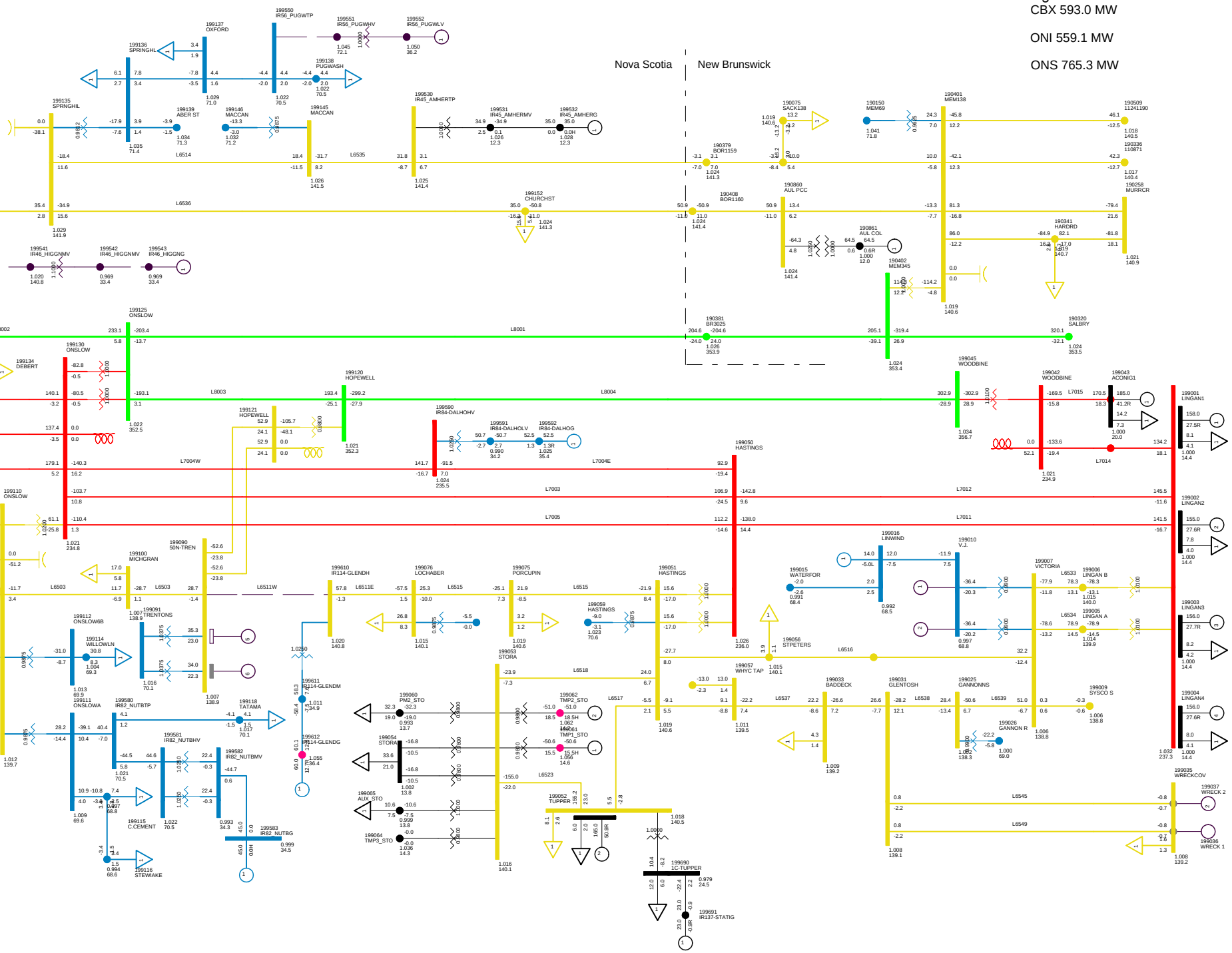

2013 SUMMER PEAK NS IMPORT 250 MW
C15 LOSE L6511W
NORTHEASTERN NS TUE, DEC 09 2008 22:38

Total Wind Gen: 290.1 MW	Gross Tupper 165.0 MW	Gross Wreck Cove 0.0 MW	Net Stora Load 178.9 MW
Gross Lingan 625.0 MW	Gross Trenton 0.0 MW	Gross Gas Turbine 0.0 MW	Total BMPC Load 108.5 MW
Gross Pt Aconi 185.0 MW	Gross Tuft's Cove 158.6 MW	Gross Small Hydro 42.9 MW	

Bus - VOLTAGE (KV/PU)
Branch - MW/MVAR
Equipment - MW/MVAR
110.0%RATEA
1.0500V 0.950UV
KV: <=25.000 <=69.000 <=138.000 <=230.000 <=345.000 >345.000

Figure ___

NSX -240.6 MW

CBX 592.3 MW

ONI 560.2 MW

ONS 765.1 MW

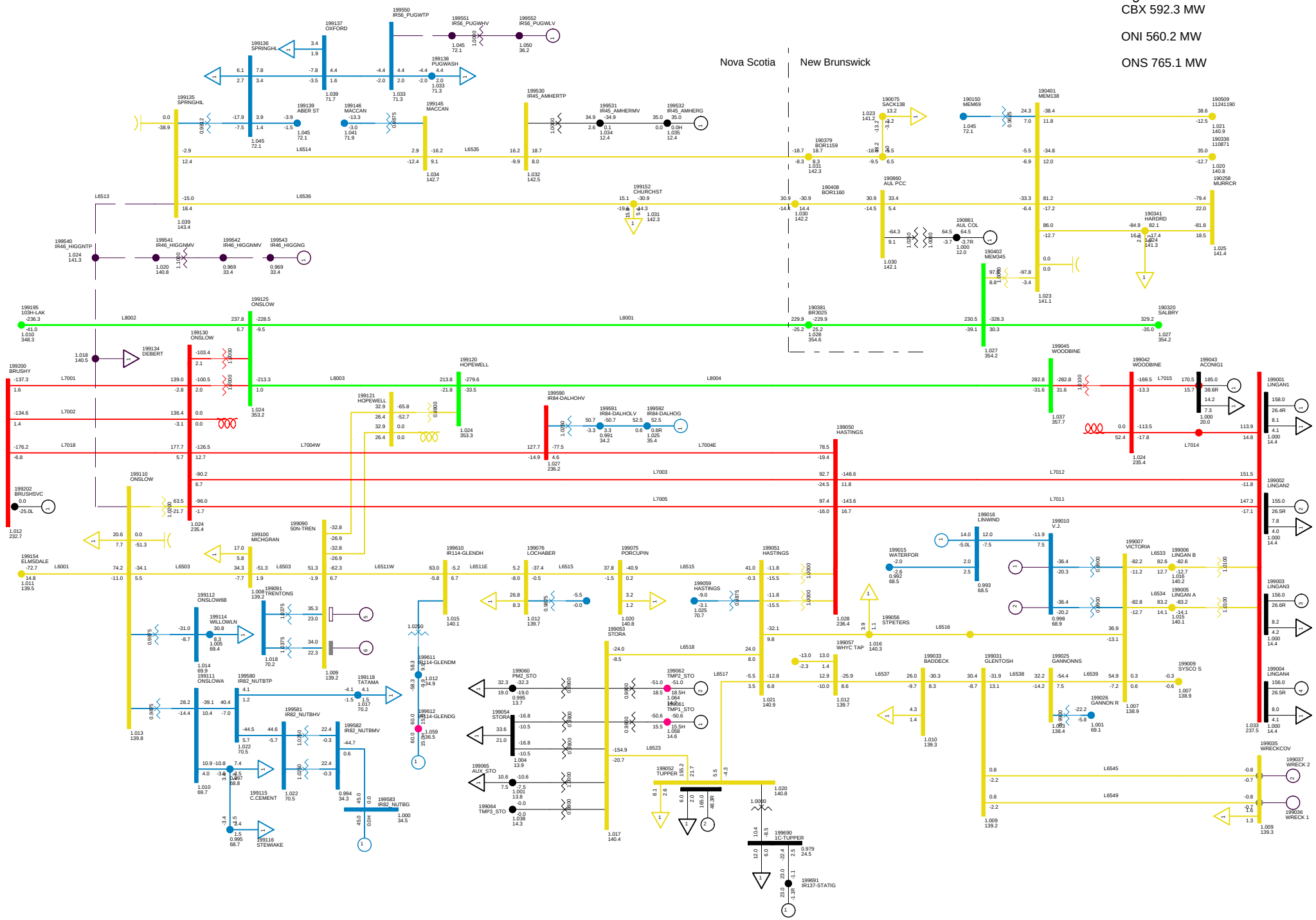

2013 SUMMER PEAK NS IMPORT 250 MW
C16 LOSE L6513
NORTHEASTERN NS TUE, DEC 09 2008 22:38

Total Wind Gen: 290.1 MW | Gross Tupper 165.0 MW | Gross Wreck Cove 0.0 MW | Net Stora Load 178.9 MW
Gross Lingan 625.0 MW | Gross Trenton 0.0 MW | Gross Gas Turbine 0.0 MW | Total BMPC Load 108.5 MW
Gross Pt Aconi 185.0 MW | Gross Tuft's Cove 158.6 MW | Gross Small Hydro 42.9 MW

Bus - VOLTAGE (KV/PU)
Branch - MW/MVAR
Equipment - MW/MVAR
110.0%RATEA
1.0500V 0.950UV
KV: <=25.000 <=69.000 <=138.000 <=230.000 <=345.000 >345.000

Figure ___

NSX -233.7 MW
CBX 592.4 MW
ONI 560.4 MW
ONS 765.1 MW

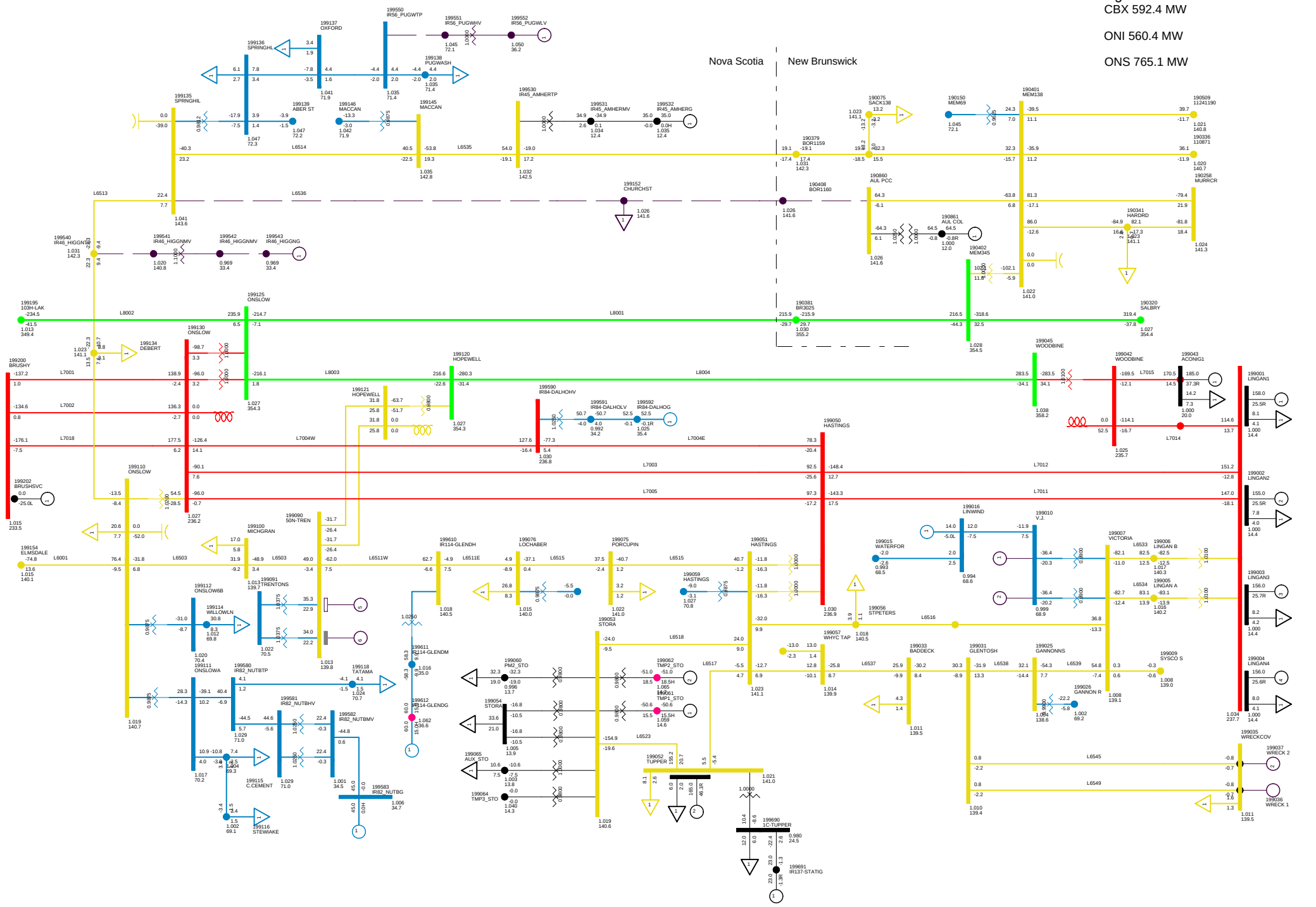

2013 SUMMER PEAK NS IMPORT 250 MW
C17 LOSE L6536
NORTHEASTERN NS TUE, DEC 09 2008 22:38

Total Wind Gen: 290.1 MW | Gross Tupper 165.0 MW | Gross Wreck Cove 0.0 MW | Net Stora Load 178.9 MW
Gross Lingan 625.0 MW | Gross Trenton 0.0 MW | Gross Gas Turbine 0.0 MW | Total BMPC Load 108.5 MW
Gross Pt Aconi 185.0 MW | Gross Tuft's Cove 158.6 MW | Gross Small Hydro 42.9 MW

Bus - VOLTAGE (KV/PU)
Branch - MW/MVAR
Equipment - MW/MVAR
110.0%RATEA
1.0500V 0.950UV
KV: <=25.000 <=69.000 <=138.000 <=230.000 <=345.000 >345.000

Figure ___

NSX -249.7 MW

CBX 592.3 MW

ONI 560.3 MW

ONS 765.1 MW

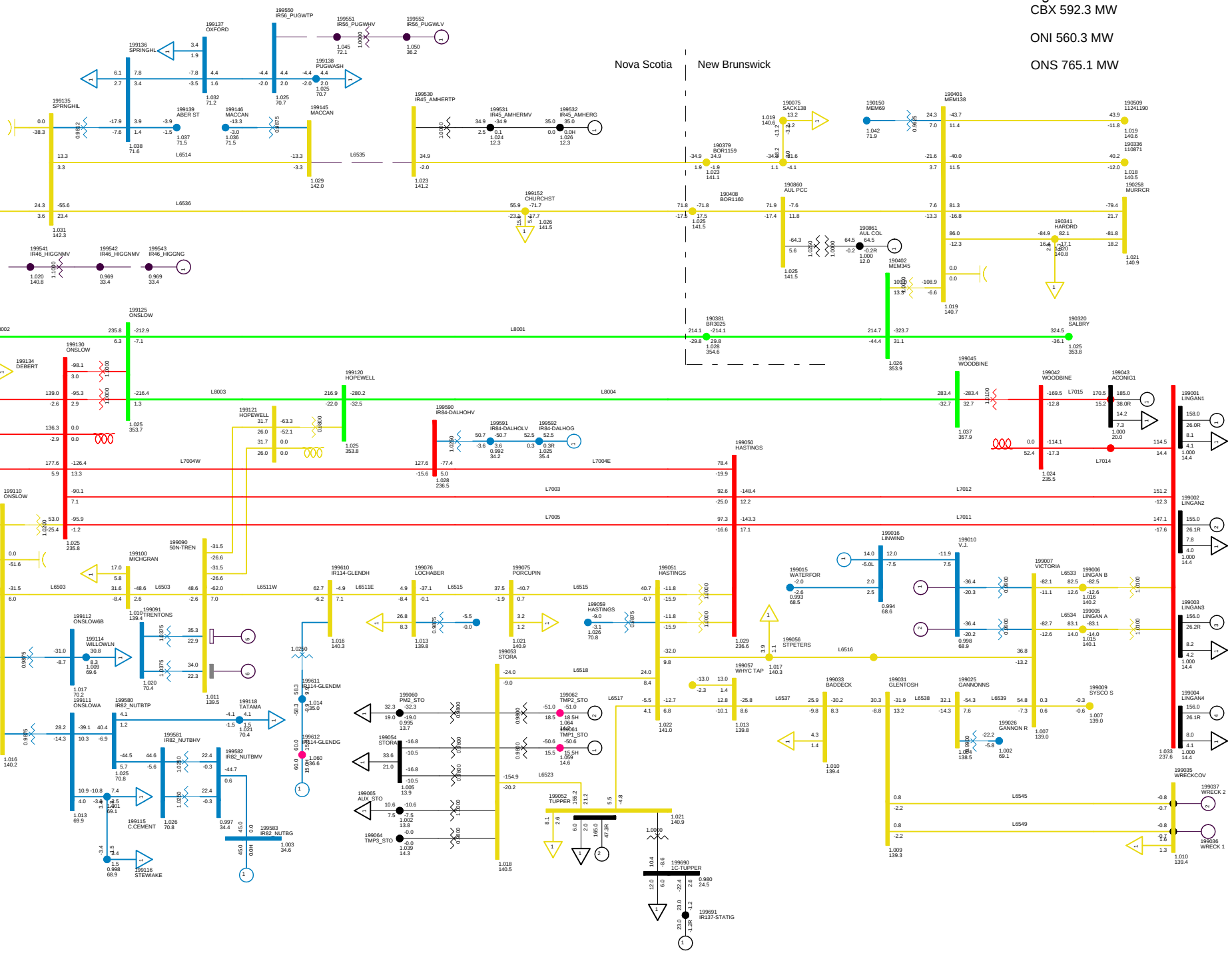

2013 SUMMER PEAK NS IMPORT 250 MW
C18 LOSE L6535S
NORTHEASTERN NS TUE, DEC 09 2008 22:38

Total Wind Gen: 290.1 MW | Gross Tupper 165.0 MW | Gross Wreck Cove 0.0 MW | Net Stora Load 178.9 MW
Gross Lingan 625.0 MW | Gross Trenton 0.0 MW | Gross Gas Turbine 0.0 MW | Total BMPC Load 108.5 MW
Gross Pt Aconi 185.0 MW | Gross Tuft's Cove 158.6 MW | Gross Small Hydro 42.9 MW

Bus - VOLTAGE (KV/PU)
Branch - MW/MVAR
Equipment - MW/MVAR
110.0%RATEA
1.0500V 0.950UV
KV: <=25.000 <=69.000 <=138.000 <=230.000 <=345.000 >345.000

Figure ___

NSX -249.7 MW
CBX 592.4 MW
ONI 560.4 MW
ONS 765.2 MW

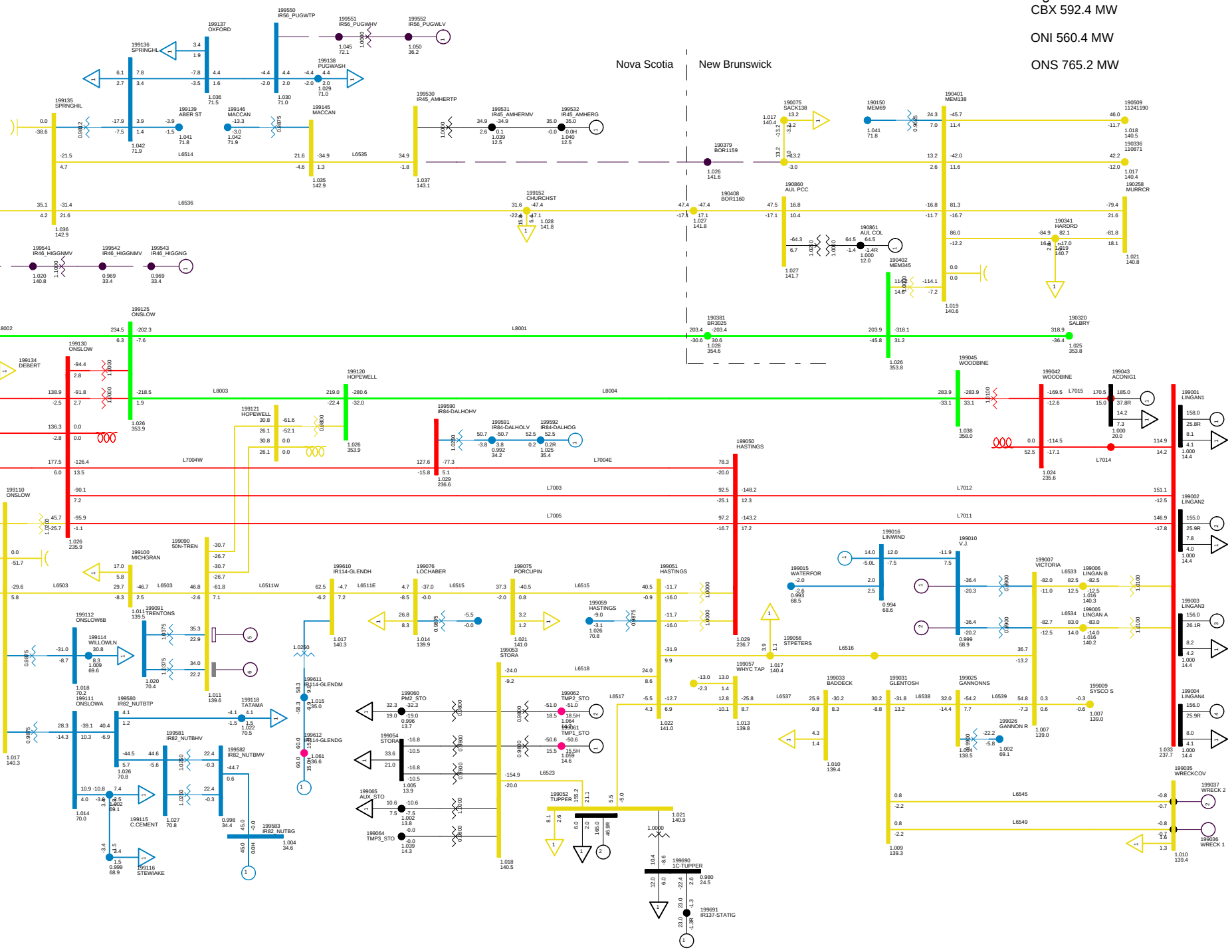

2013 SUMMER PEAK NS IMPORT 250 MW
C19 LOSE L6535N
NORTHEASTERN NS TUE, DEC 09 2008 22:38

Total Wind Gen: 290.1 MW	Gross Tupper 165.0 MW	Gross Wreck Cove 0.0 MW	Net Stora Load 178.9 MW
Gross Lingan 625.0 MW	Gross Trenton 0.0 MW	Gross Gas Turbine 0.0 MW	Total BMPC Load 108.5 MW
Gross Pt Aconi 185.0 MW	Gross Tuft's Cove 158.6 MW	Gross Small Hydro 42.9 MW	

Bus - VOLTAGE (KV/PU)
Branch - MW/MVAR
Equipment - MW/MVAR
110.0%RATEA
1.0500V 0.950UV
KV: <=25.000 <=69.000 <=138.000 <=230.000 <=345.000 >345.000

Figure ___

NSX -232.9 MW
CBX 609.6 MW
ONI 577.1 MW
ONS 765.2 MW

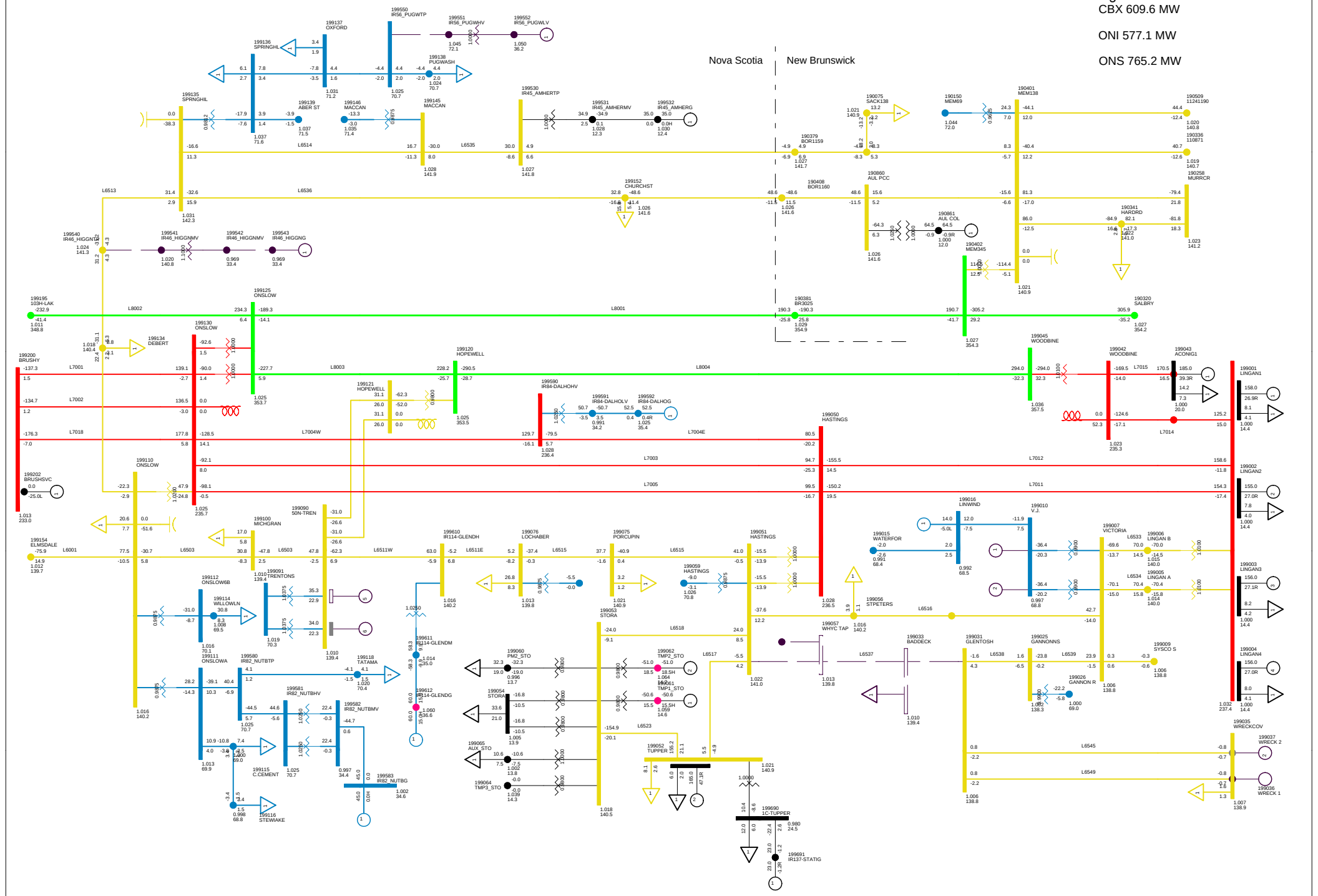

2013 SUMMER PEAK NS IMPORT 250 MW
C20 LOSE L6537
NORTHEASTERN NS TUE, DEC 09 2008 22:38

Total Wind Gen: 290.1 MW | Gross Tupper 165.0 MW | Gross Wreck Cove 0.0 MW | Net Stora Load 178.9 MW
Gross Lingan 625.0 MW | Gross Trenton 0.0 MW | Gross Gas Turbine 0.0 MW | Total BMPC Load 108.5 MW
Gross Pt Aconi 185.0 MW | Gross Tuft's Cove 158.6 MW | Gross Small Hydro 42.9 MW

Bus - VOLTAGE (KV/PU)
Branch - MW/MVAR
Equipment - MW/MVAR
110.0%RATEA
1.0500V 0.950UV
KV: <=25.000 <=69.000 <=138.000 <=230.000 <=345.000 >345.000

Figure ___

NSX -246.3 MW

CBX 595.8 MW

ONI 563.8 MW

ONS 765.2 MW

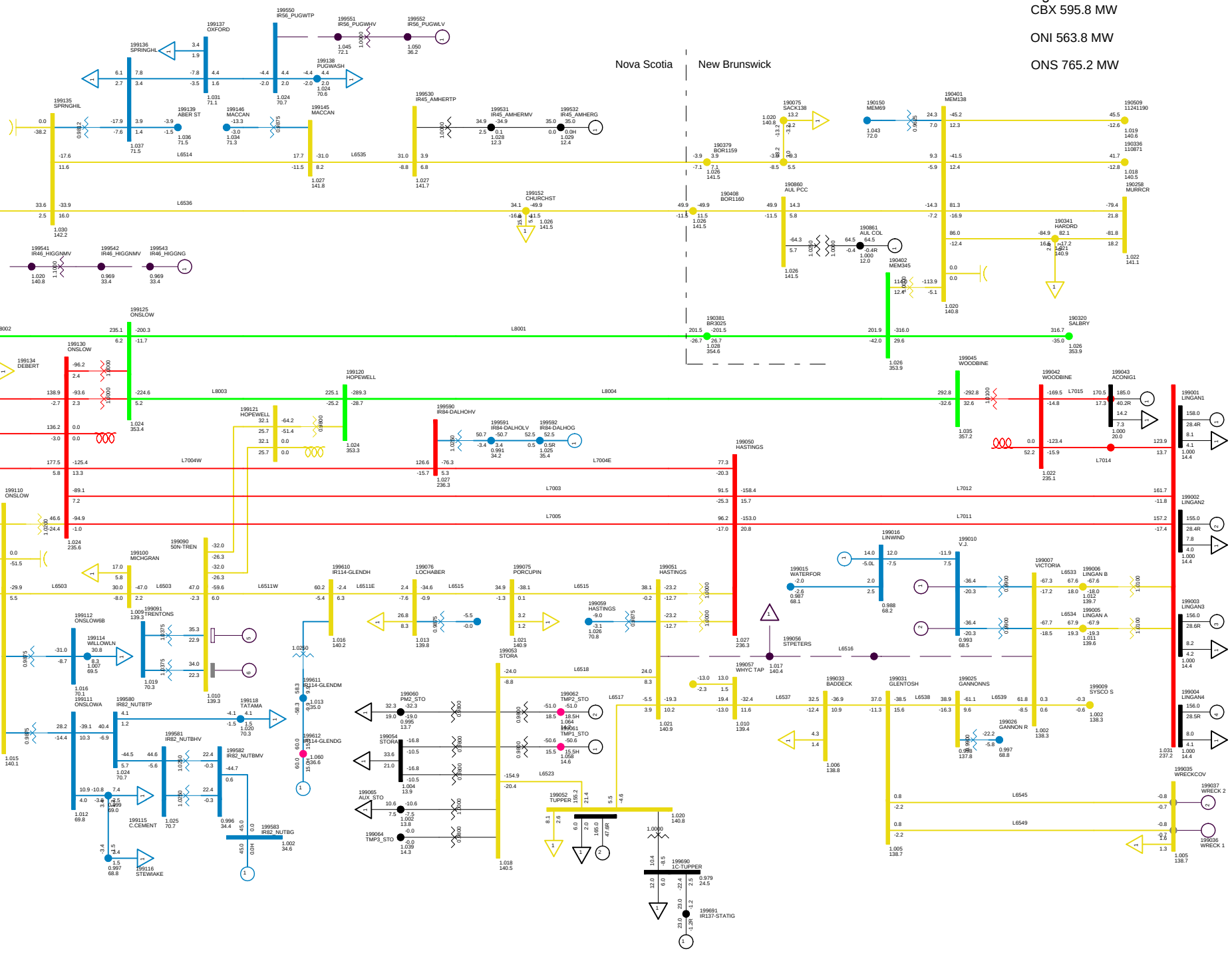

2013 SUMMER PEAK NS IMPORT 250 MW
C21 LOSE L6516
NORTHEASTERN NS TUE, DEC 09 2008 22:38

Total Wind Gen: 290.1 MW	Gross Tupper 165.0 MW	Gross Wreck Cove 0.0 MW	Net Stora Load 178.9 MW
Gross Lingan 625.0 MW	Gross Trenton 0.0 MW	Gross Gas Turbine 0.0 MW	Total BMPC Load 108.5 MW
Gross Pt Aconi 185.0 MW	Gross Tuft's Cove 158.6 MW	Gross Small Hydro 42.9 MW	

Bus - VOLTAGE (KV/PU)
Branch - MW/MVAR
Equipment - MW/MVAR
110.0%RATEA
1.0500V 0.950UV
KV: <=25.000 <=69.000 <=138.000 <=230.000 <=345.000 >345.000

Figure ___

NSX -250.0 MW
CBX 591.9 MW
ONI 560.1 MW
ONS 765.2 MW

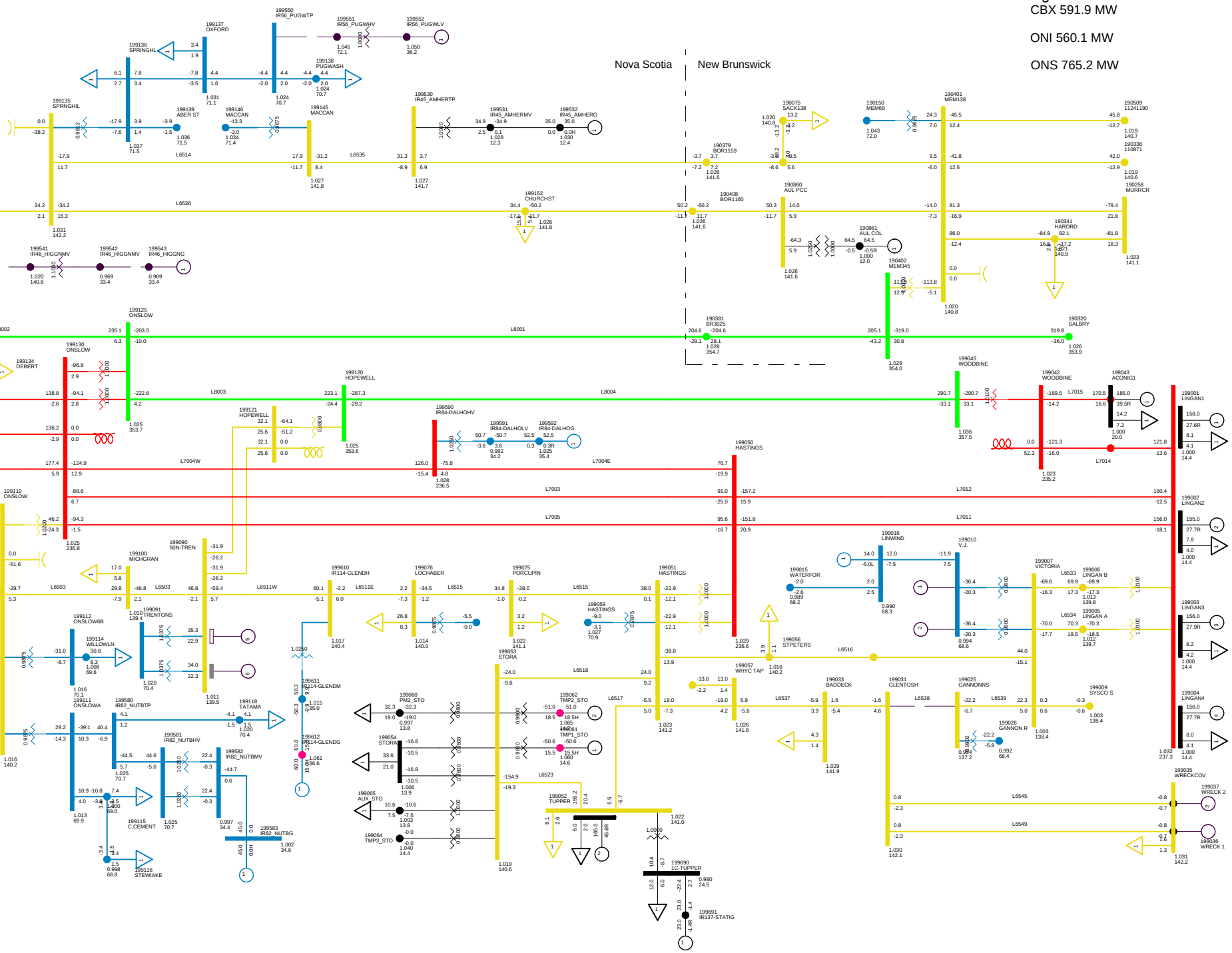

2013 SUMMER PEAK NS IMPORT 250 MW
C22 LOSE L6538
NORTHEASTERN NS TUE, DEC 09 2008 22:38

Total Wind Gen: 290.1 MW | Gross Tupper 165.0 MW | Gross Wreck Cove 0.0 MW | Net Stora Load 178.9 MW
Gross Lingan 625.0 MW | Gross Trenton 0.0 MW | Gross Gas Turbine 0.0 MW | Total BMPC Load 108.5 MW
Gross Pt Aconi 185.0 MW | Gross Tuft's Cove 158.6 MW | Gross Small Hydro 42.9 MW

Bus - VOLTAGE (KV/PU)
Branch - MW/MVAR
Equipment - MW/MVAR
110.0%RATEA
1.0500V 0.950UV
KV: <=25.000 <=69.000 <=138.000 <=230.000 <=345.000 >345.000

Figure ___

Total Wind Gen: 290.1 MW | Gross Tupper 165.0 MW | Gross Wreck Cove 0.0 MW

Gross Lingan 625.0 MW | Gross Trenton 0.0 MW | Gross Gas Turbine 0.0 MW

Gross Pt Aconi 185.0 MW | Gross Tuft's Cove 158.6 MW | Gross Small Hydro 42.9 MW

Net Stora Load 178.9 MW | Total BMPC Load 108.5 MW

NSX -249.7 MW

CBX 592.3 MW

ONI 560.4 MW

ONS 765.2 MW

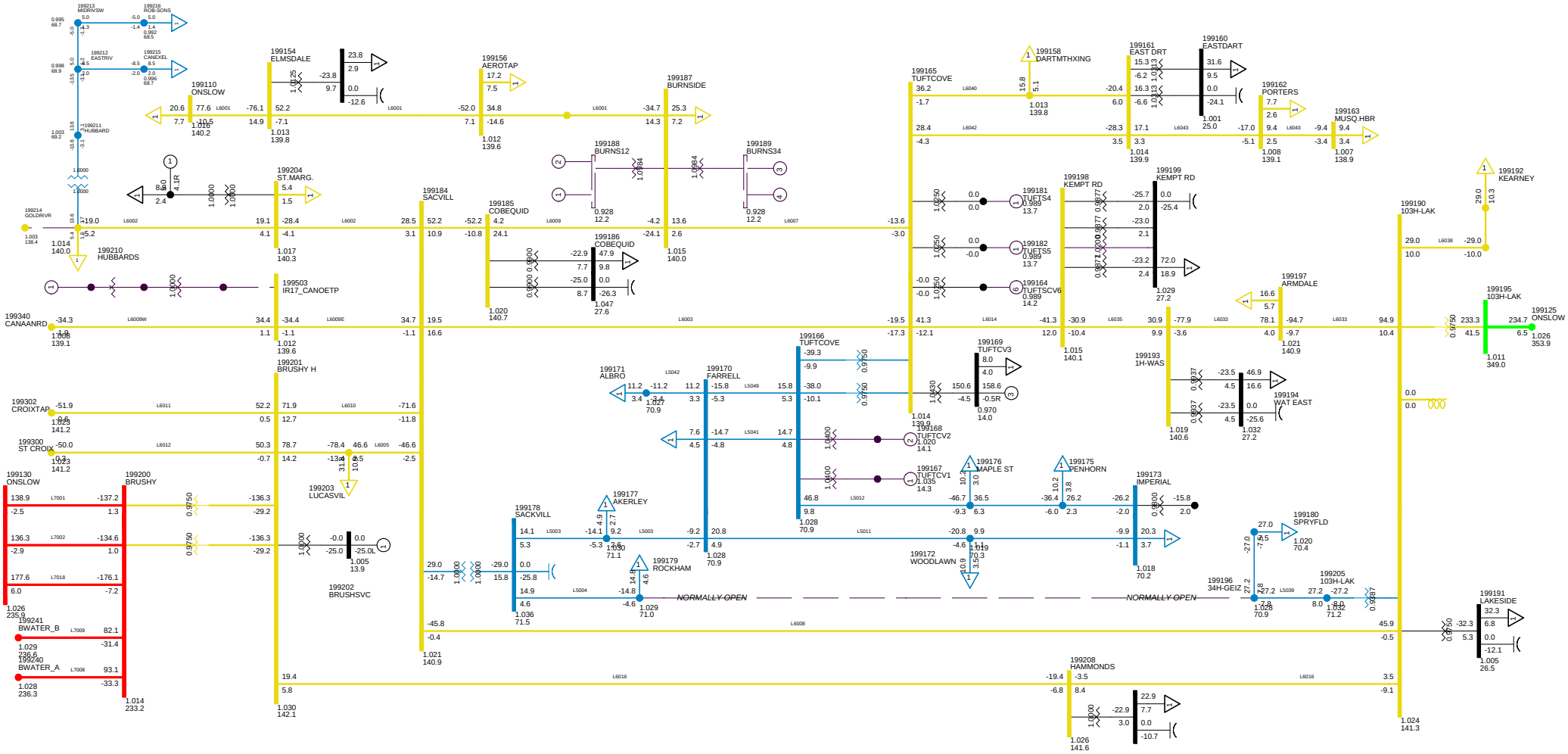

2010 SUMMER PEAK, NSLOAD=1700
NS-NB=-250; NB-NE=1000; CBX=592; ONI=560 ONS=765
METRO ZONE TUE, DEC 09 2008 22:38

Bus - VOLTAGE (KV/PU)
Branch - MW/MVAR
Equipment - MW/MVAR
100.0%RATEA
1.050OV 0.950UV
KV: <=30.000 <=69.000 <=138.000 <=230.000 <=345.000 >345.000

Figure __

Total Wind Gen: 290.1 MW
Gross Tupper 165.0 MW
Gross Wreck Cove 0.0 MW
Gross Lingan 625.0 MW
Gross Trenton 0.0 MW
Gross Gas Turbine 0.0 MW
Gross Pt Aconi 185.0 MW
Gross Tuft's Cove 158.6 MW
Gross Small Hydro 42.9 MW
Net Stora Load 178.9 MW
Total BMPC Load 108.5 MW

NSX -249.7 MW
CBX 592.4 MW
ONI 560.4 MW
ONS 765.2 MW

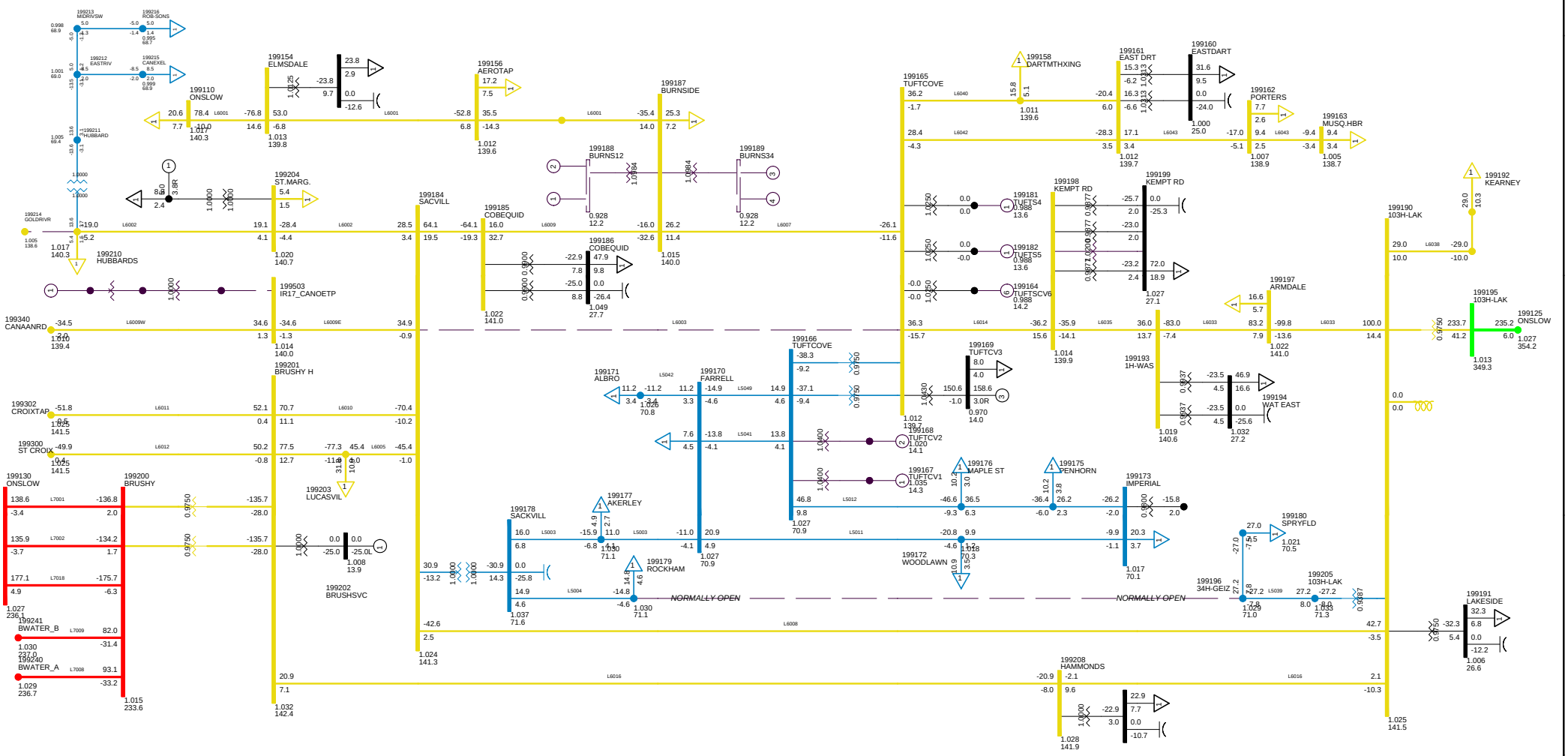

2013 SUMMER PEAK NS IMPORT 250 MW
C23 LOSE L6003
METRO ZONE TUE, DEC 09 2008 22:39

Bus - VOLTAGE (KV/PU)
Branch - MW/MVAR
Equipment - MW/MVAR
100.0%RATEA
1.050OV 0.950UV
KV: <=30.000 <=69.000 <=138.000 <=230.000 <=345.000 >345.000

Figure __

Total Wind Gen: 290.1 MW
Gross Tupper 165.0 MW
Gross Wreck Cove 0.0 MW
Gross Lingan 625.0 MW
Gross Trenton 0.0 MW
Gross Gas Turbine 0.0 MW
Gross Pt Aconi 185.0 MW
Gross Tuft's Cove 158.6 MW
Gross Small Hydro 42.9 MW
Net Stora Load 178.9 MW
Total BMPC Load 108.5 MW

NSX -216.6 MW
CBX 592.5 MW
ONI 560.6 MW
ONS 732.5 MW

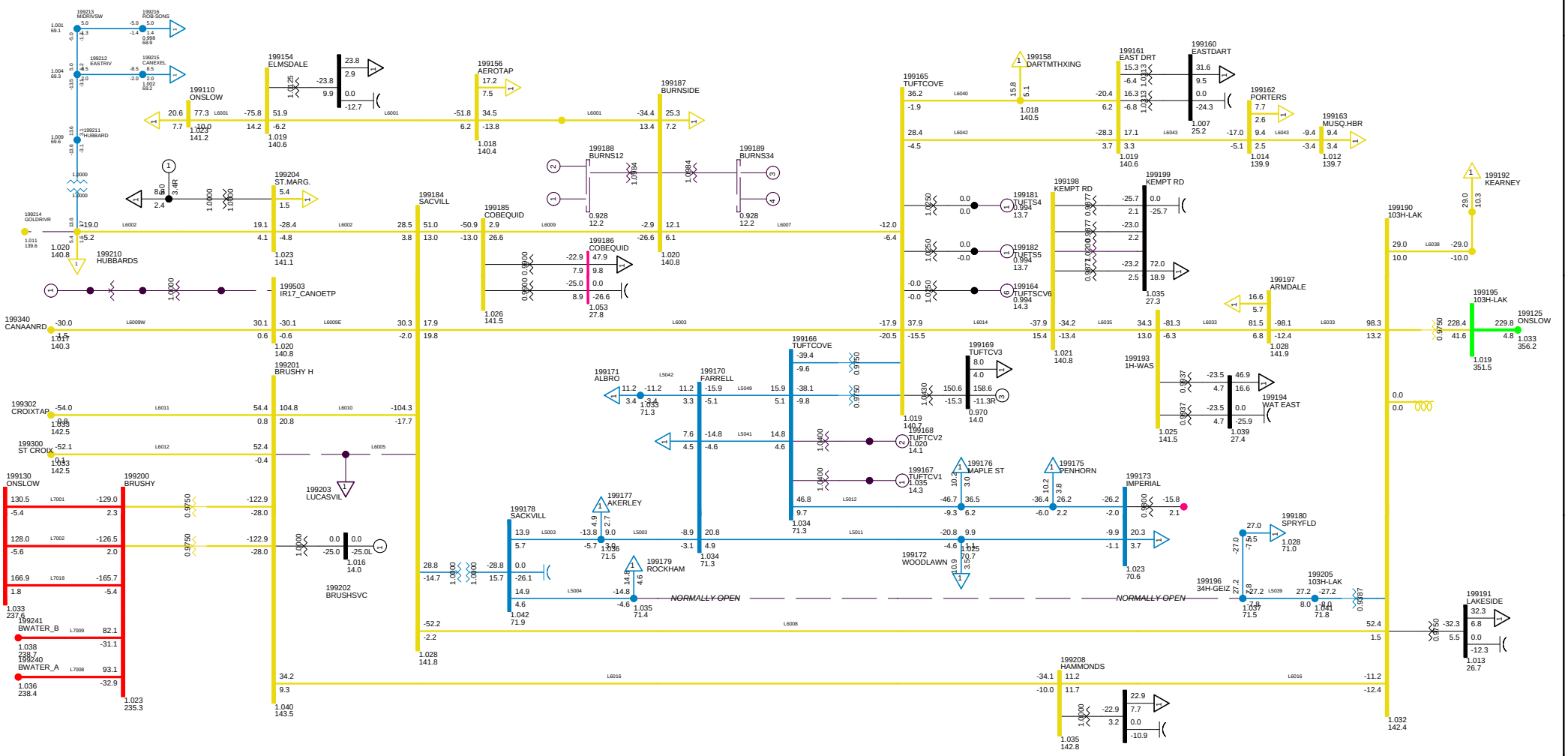

2013 SUMMER PEAK NS IMPORT 250 MW
C24 LOSE L6005
METRO ZONE TUE, DEC 09 2008 22:39

Bus - VOLTAGE (KV/PU)
Branch - MW/MVAR
Equipment - MW/MVAR
100.0%RATEA
1.050OV 0.950UV
KV: <=30.000 <=69.000 <=138.000 <=230.000 <=345.000 >345.000

Figure __

Total Wind Gen: 290.1 MW | Gross Tupper 165.0 MW | Gross Wreck Cove 0.0 MW

Gross Lingan 625.0 MW | Gross Trenton 0.0 MW | Gross Gas Turbine 0.0 MW

Gross Pt Aconi 185.0 MW | Gross Tuft's Cove 158.6 MW | Gross Small Hydro 42.9 MW

Net Stora Load 178.9 MW | Total BMPC Load 108.5 MW

NSX -249.6 MW

CBX 592.4 MW

ONI 560.4 MW

ONS 765.2 MW

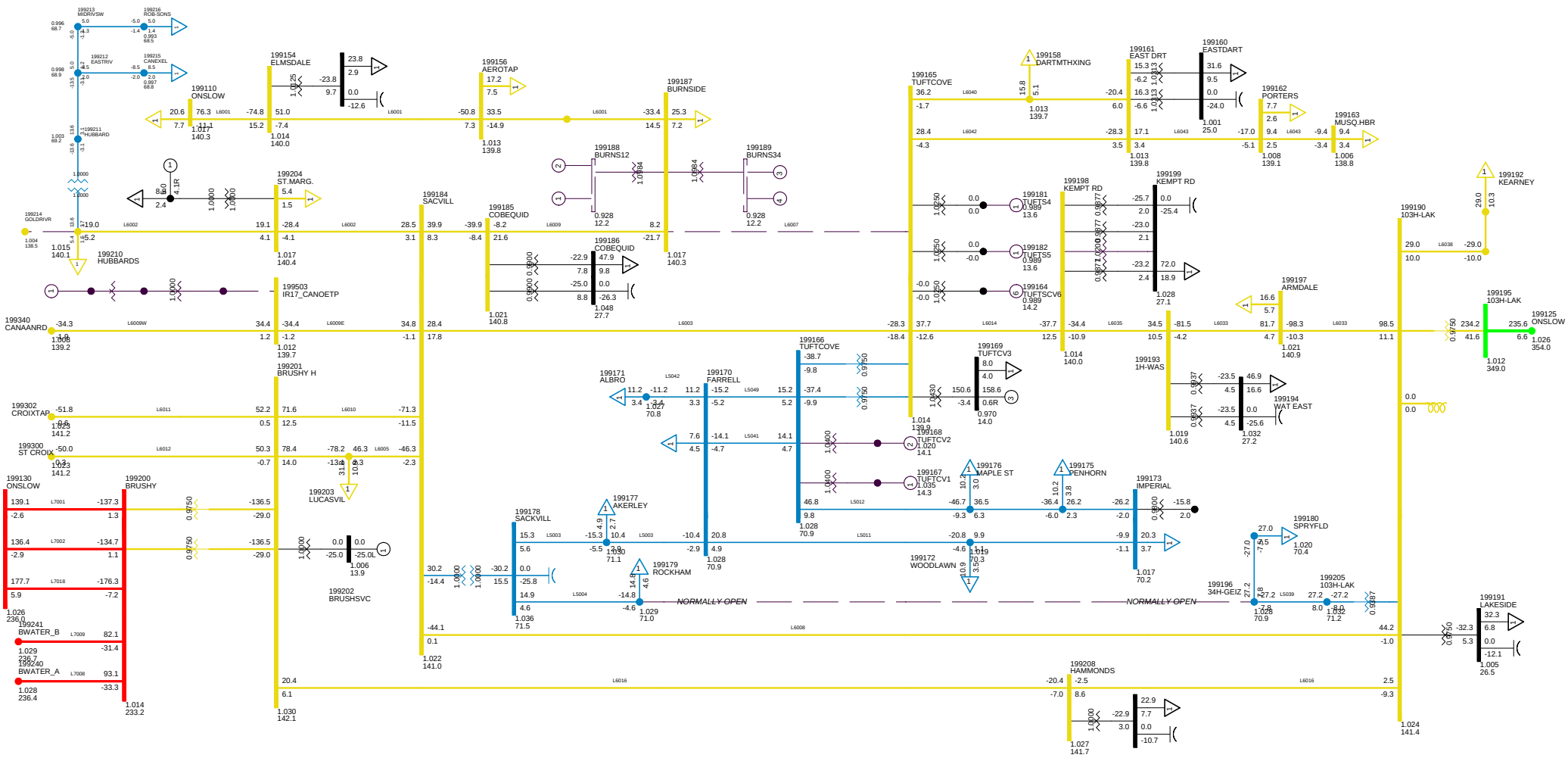

2013 SUMMER PEAK NS IMPORT 250 MW
C25 LOSE L6007
METRO ZONE TUE, DEC 09 2008 22:39

Bus - VOLTAGE (KV/PU)
Branch - MW/MVAR
Equipment - MW/MVAR
100.0%RATEA
1.050OV 0.950UV
KV: <=30.000 <=69.000 <=138.000 <=230.000 <=345.000 >345.000

Figure __

Total Wind Gen: 290.1 MW
Gross Tupper 165.0 MW
Gross Wreck Cove 0.0 MW
Gross Lingan 625.0 MW
Gross Trenton 0.0 MW
Gross Gas Turbine 0.0 MW
Gross Pt Aconi 185.0 MW
Gross Tuft's Cove 158.6 MW
Gross Small Hydro 42.9 MW
Net Stora Load 178.9 MW
Total BMPC Load 108.5 MW

NSX -250.1 MW
CBX 592.3 MW
ONI 560.3 MW
ONS 765.5 MW

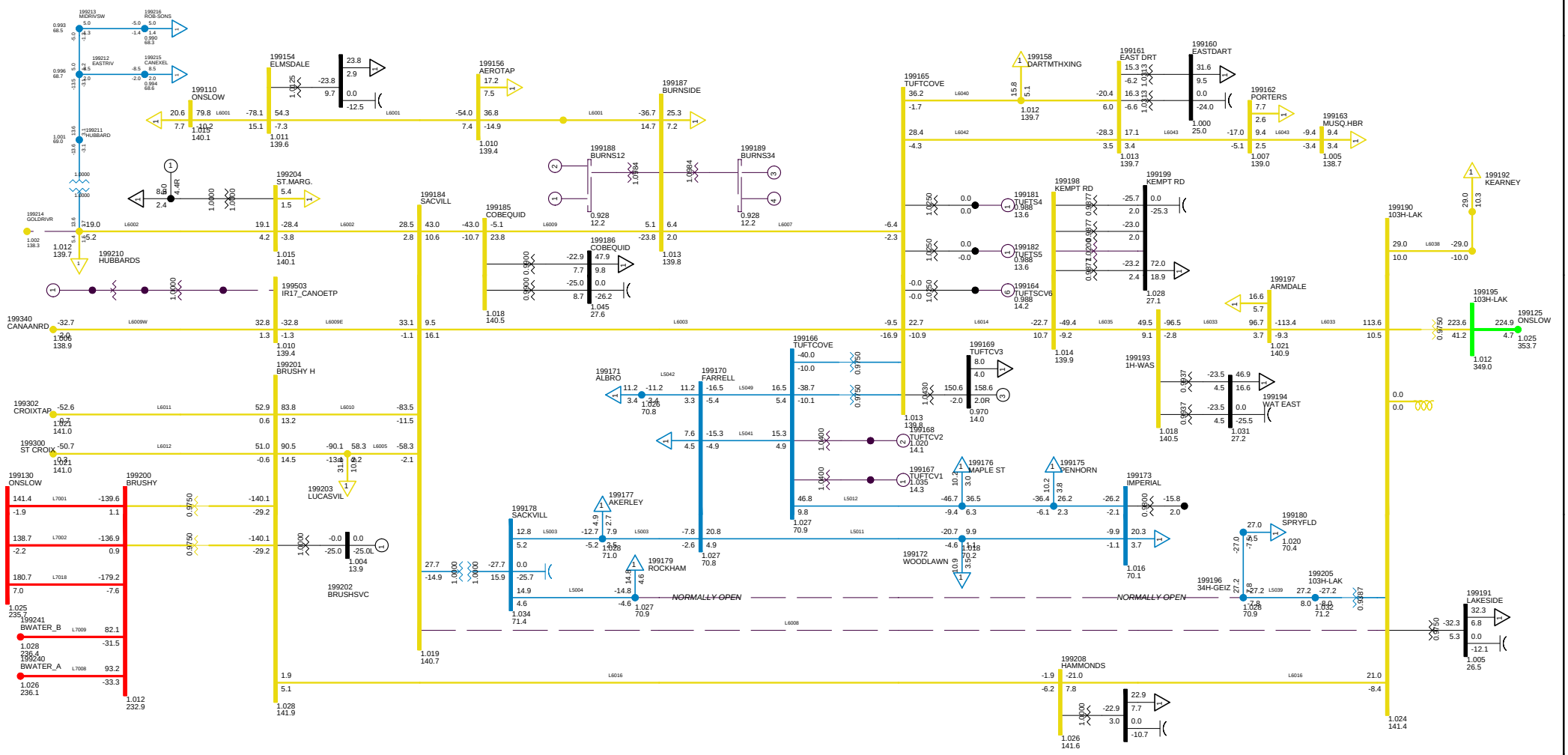

2013 SUMMER PEAK NS IMPORT 250 MW
C26 LOSE L6008
METRO ZONE TUE, DEC 09 2008 22:39

Bus - VOLTAGE (KV/PU)
Branch - MW/MVAR
Equipment - MW/MVAR
100.0%RATEA
1.050OV 0.950UV
KV: <=30.000 <=69.000 <=138.000 <=230.000 <=345.000 >345.000

Figure __

Total Wind Gen: 290.1 MW
Gross Tupper 165.0 MW
Gross Wreck Cove 0.0 MW
Gross Lingan 625.0 MW
Gross Trenton 0.0 MW
Gross Gas Turbine 0.0 MW
Gross Pt Aconi 185.0 MW
Gross Tuft's Cove 158.6 MW
Gross Small Hydro 42.9 MW
Net Stora Load 178.9 MW
Total BMPC Load 108.5 MW

NSX -225.9 MW
CBX 592.4 MW
ONI 560.5 MW
ONS 741.6 MW

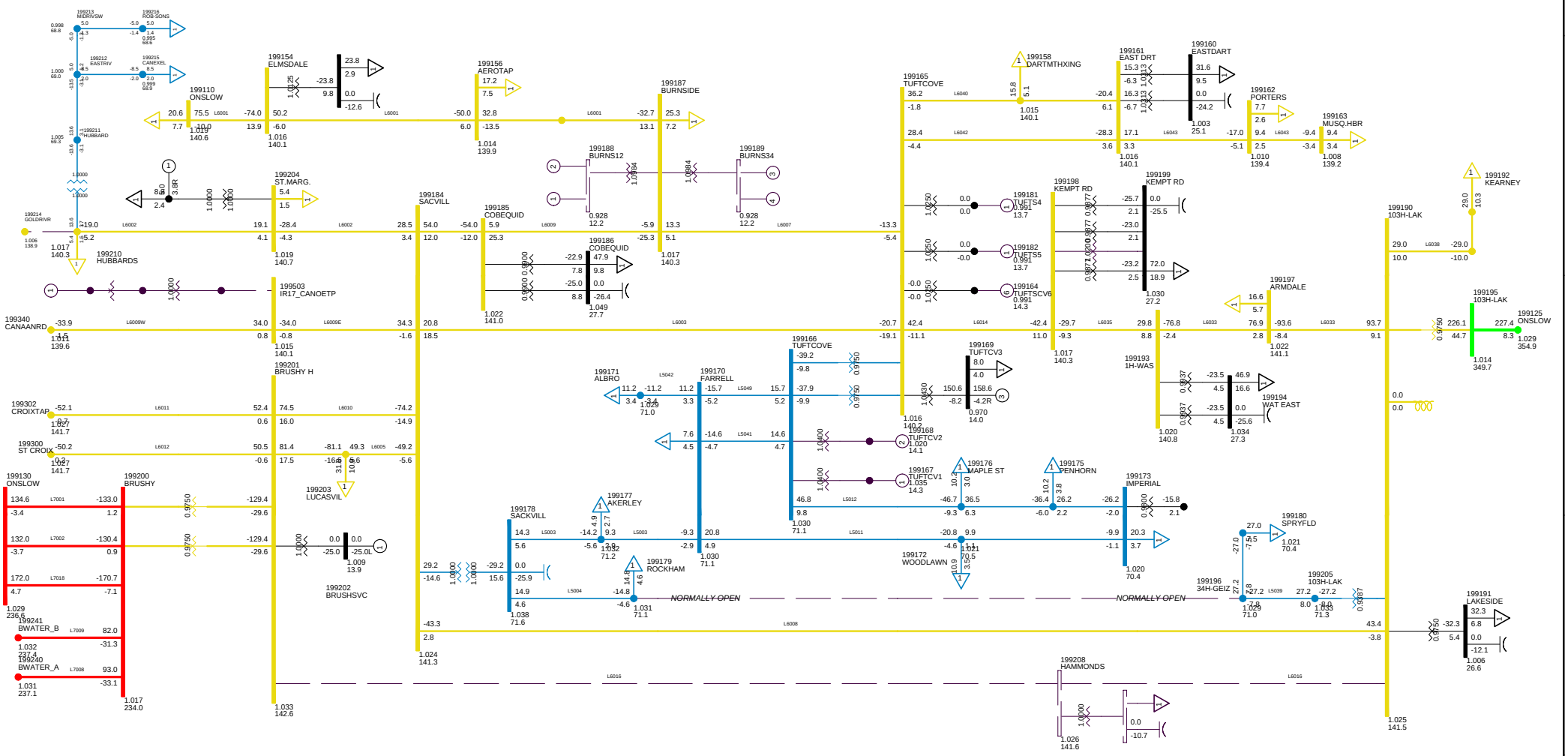

2013 SUMMER PEAK NS IMPORT 250 MW
C27 LOSE L6009
METRO ZONE TUE, DEC 09 2008 22:39

Bus - VOLTAGE (KV/PU)
Branch - MW/MVAR
Equipment - MW/MVAR
100.0%RATEA
1.050OV 0.950UV
KV: <=30.000 <=69.000 <=138.000 <=230.000 <=345.000 >345.000

Figure __

Total Wind Gen: 290.1 MW
Gross Tupper 165.0 MW
Gross Wreck Cove 0.0 MW
Gross Lingan 625.0 MW
Gross Trenton 0.0 MW
Gross Gas Turbine 0.0 MW
Gross Pt Aconi 185.0 MW
Gross Tuft's Cove 158.6 MW
Gross Small Hydro 42.9 MW
Net Stora Load 178.9 MW
Total BMPC Load 108.5 MW

NSX -250.1 MW
CBX 592.4 MW
ONI 560.4 MW
ONS 765.6 MW

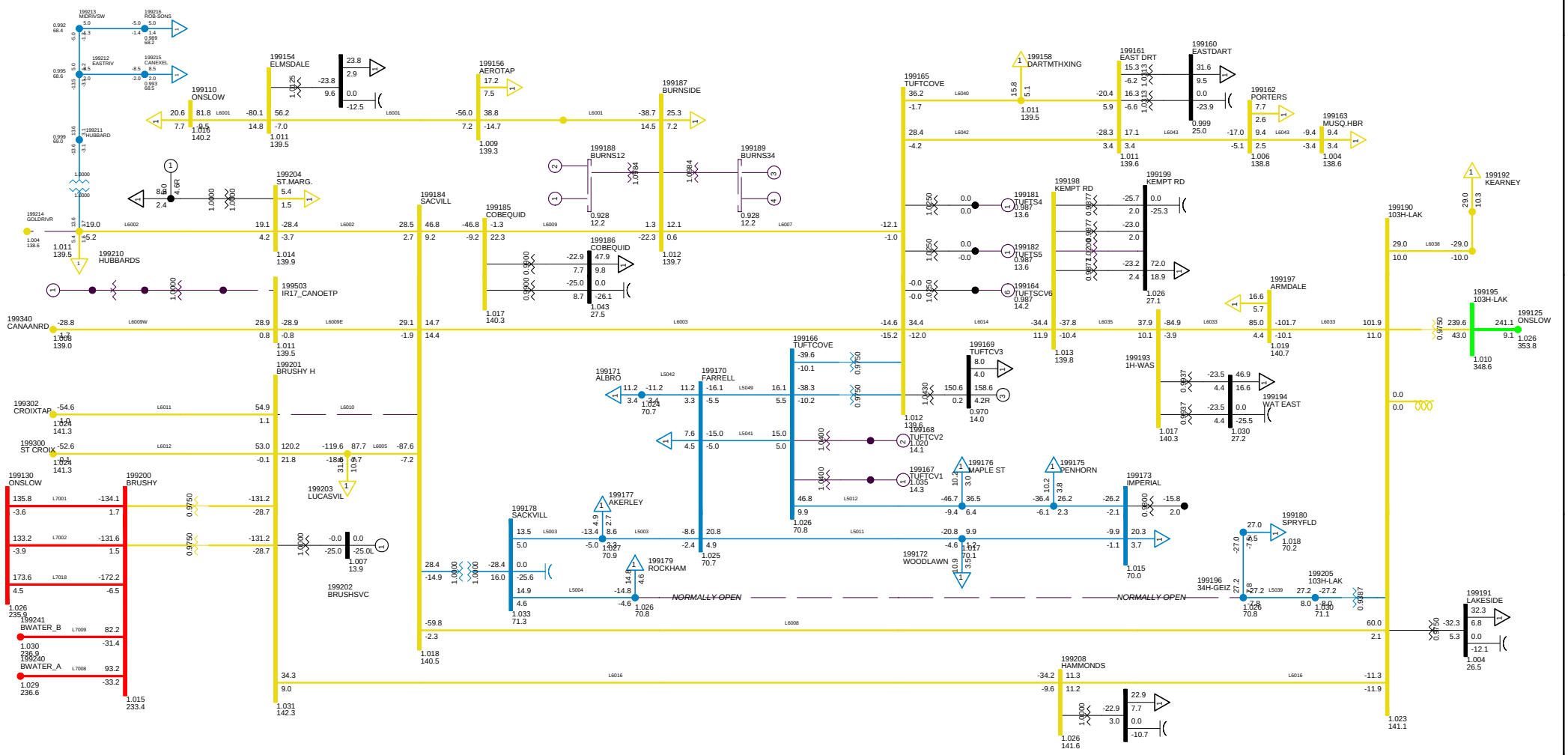

2013 SUMMER PEAK NS IMPORT 250 MW
C28 LOSE L6010
METRO ZONE TUE, DEC 09 2008 22:39

Bus - VOLTAGE (KV/PU)
Branch - MW/MVAR
Equipment - MW/MVAR
100.0%RATEA
1.050OV 0.950UV
KV: <=30.000 <=69.000 <=138.000 <=230.000 <=345.000 >345.000

Figure __

Total Wind Gen: 290.1 MW
Gross Tupper 165.0 MW
Gross Wreck Cove 0.0 MW
Gross Lingan 625.0 MW
Gross Trenton 0.0 MW
Gross Gas Turbine 0.0 MW
Gross Pt Aconi 185.0 MW
Gross Tuft's Cove 158.6 MW
Gross Small Hydro 42.9 MW
Net Stora Load 178.9 MW
Total BMPC Load 108.5 MW

NSX -249.8 MW
CBX 592.4 MW
ONI 560.4 MW
ONS 765.3 MW

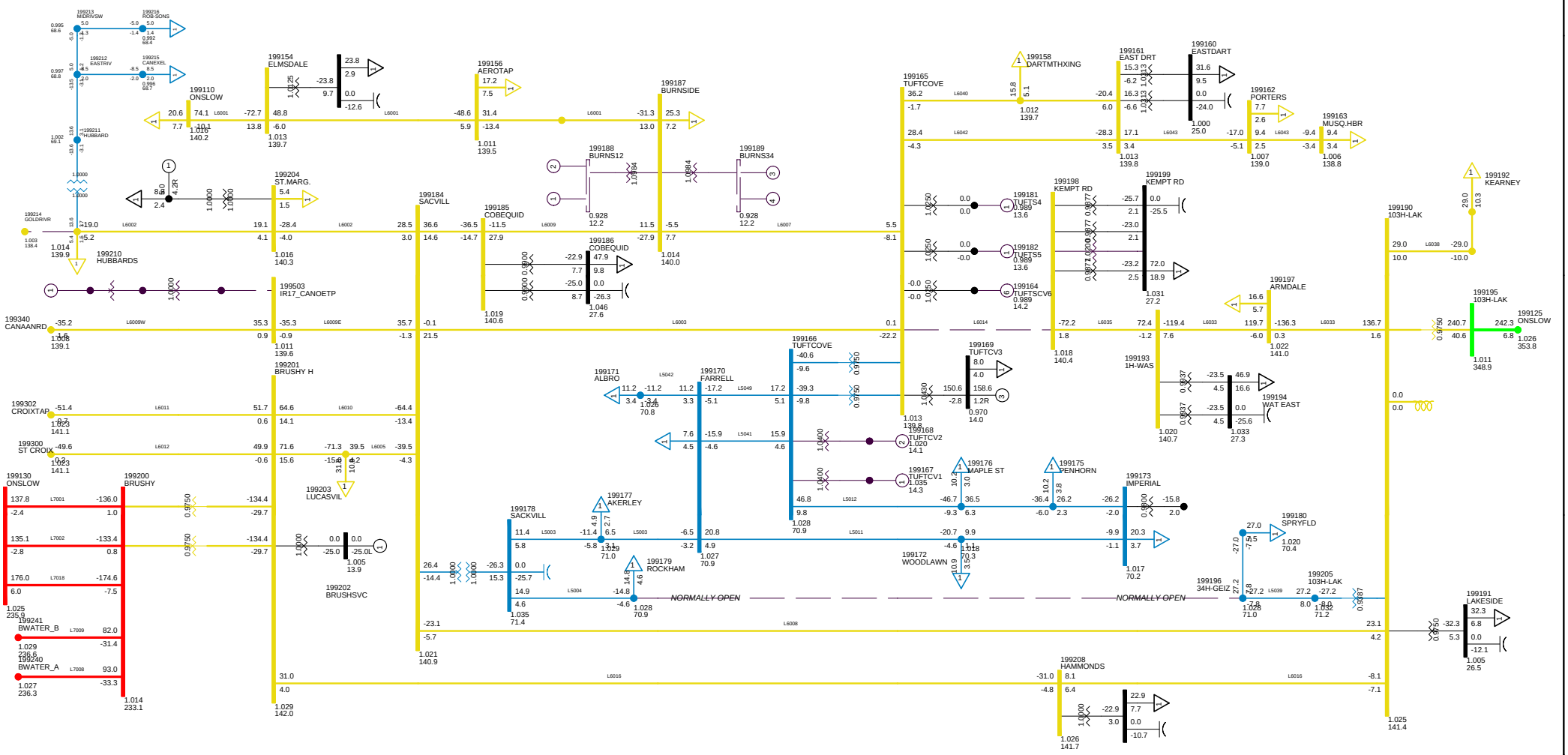

2013 SUMMER PEAK NS IMPORT 250 MW
C29 LOSE L6014
METRO ZONE TUE, DEC 09 2008 22:39

Bus - VOLTAGE (KV/PU)
Branch - MW/MVAR
Equipment - MW/MVAR
100.0%RATEA
1.050OV 0.950UV
KV: <=30.000 <=69.000 <=138.000 <=230.000 <=345.000 >345.000

Figure __

Total Wind Gen: 290.1 MW
Gross Tupper 165.0 MW
Gross Wreck Cove 0.0 MW
Gross Lingan 625.0 MW
Gross Trenton 0.0 MW
Gross Gas Turbine 0.0 MW
Gross Pt Aconi 185.0 MW
Gross Tuft's Cove 158.6 MW
Gross Small Hydro 42.9 MW
Net Stora Load 178.9 MW
Total BMPC Load 108.5 MW

NSX -225.9 MW
CBX 592.4 MW
ONI 560.5 MW
ONS 741.6 MW

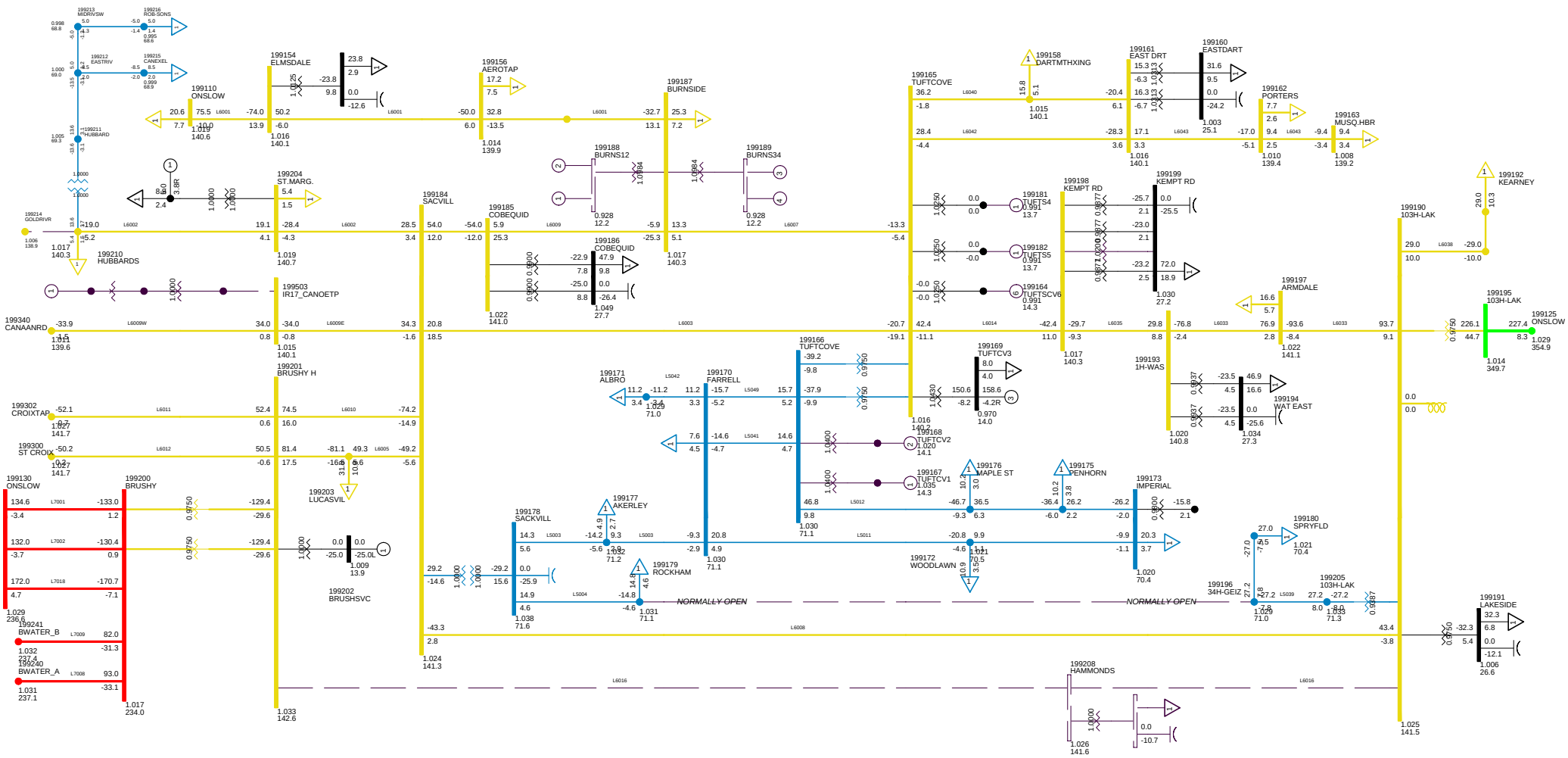

2013 SUMMER PEAK NS IMPORT 250 MW
C30 LOSE L6016
METRO ZONE TUE, DEC 09 2008 22:40

Bus - VOLTAGE (KV/PU)
Branch - MW/MVAR
Equipment - MW/MVAR
100.0%RATEA
1.050OV 0.950UV
KV: <=30.000 <=69.000 <=138.000 <=230.000 <=345.000 >345.000

Figure __

Total Wind Gen: 290.1 MW
Gross Tupper 165.0 MW
Gross Wreck Cove 0.0 MW
Gross Lingan 625.0 MW
Gross Trenton 0.0 MW
Gross Gas Turbine 0.0 MW
Gross Pt Aconi 185.0 MW
Gross Tuft's Cove 158.6 MW
Gross Small Hydro 42.9 MW
Net Stora Load 178.9 MW
Total BMPC Load 108.5 MW

NSX -210.1 MW
CBX 592.4 MW
ONI 560.6 MW
ONS 725.9 MW

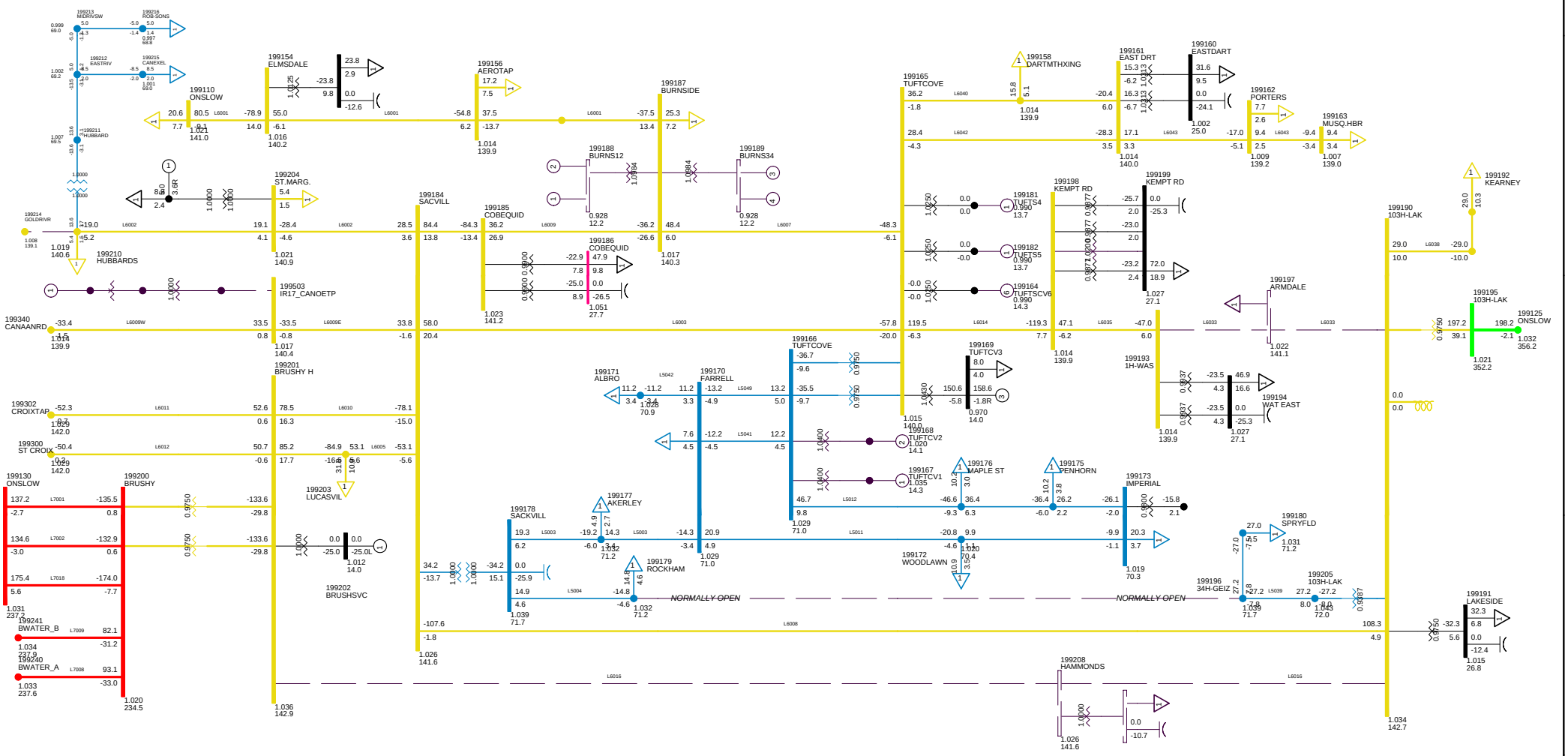

2013 SUMMER PEAK NS IMPORT 250 MW
C31 LOSE L6033
METRO ZONE TUE, DEC 09 2008 22:40

Bus - VOLTAGE (KV/PU)
Branch - MW/MVAR
Equipment - MW/MVAR
100.0%RATEA
1.050OV 0.950UV
KV: <=30.000 <=69.000 <=138.000 <=230.000 <=345.000 >345.000

Figure __

Total Wind Gen: 290.1 MW
Gross Tupper 165.0 MW
Gross Wreck Cove 0.0 MW
Gross Lingan 625.0 MW
Gross Trenton 0.0 MW
Gross Gas Turbine 0.0 MW
Gross Pt Aconi 185.0 MW
Gross Tuft's Cove 158.6 MW
Gross Small Hydro 42.9 MW
Net Stora Load 178.9 MW
Total BMPC Load 108.5 MW

NSX -249.9 MW
CBX 592.4 MW
ONI 560.4 MW
ONS 765.4 MW

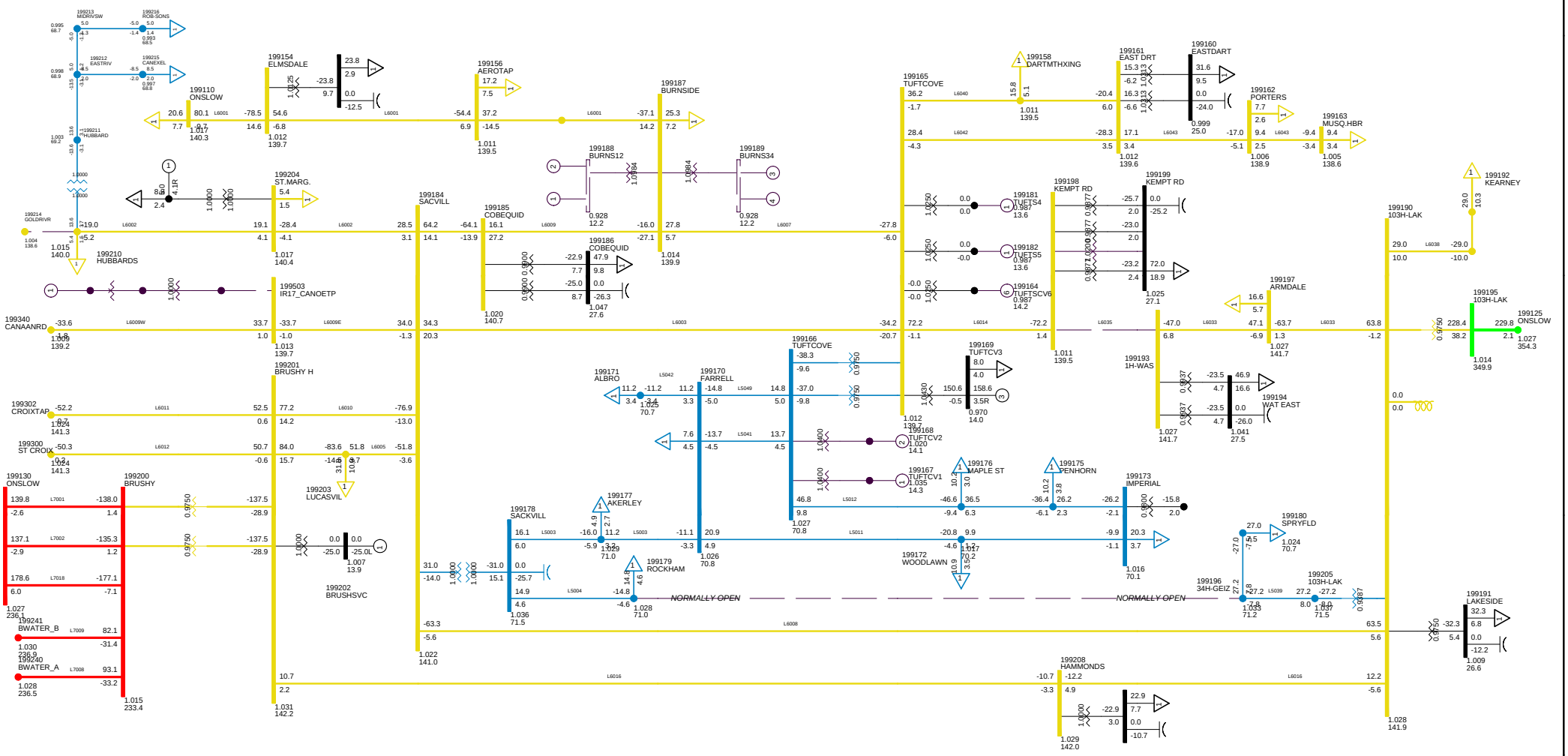

2013 SUMMER PEAK NS IMPORT 250 MW
C32 LOSE L6035
METRO ZONE TUE, DEC 09 2008 22:40

Bus - VOLTAGE (KV/PU)
Branch - MW/MVAR
Equipment - MW/MVAR
100.0%RATEA
1.050OV 0.950UV
KV: <=30.000 <=69.000 <=138.000 <=230.000 <=345.000 >345.000

Figure __

Total Wind Gen: 290.1 MW
Gross Tupper 165.0 MW
Gross Wreck Cove 0.0 MW
Gross Lingan 625.0 MW
Gross Trenton 0.0 MW
Gross Gas Turbine 0.0 MW
Gross Pt Aconi 185.0 MW
Gross Tuft's Cove 158.6 MW
Gross Small Hydro 42.9 MW
Net Stora Load 178.9 MW
Total BMPC Load 108.5 MW

NSX -231.1 MW
CBX 592.0 MW
ONI 559.8 MW
ONS 745.5 MW

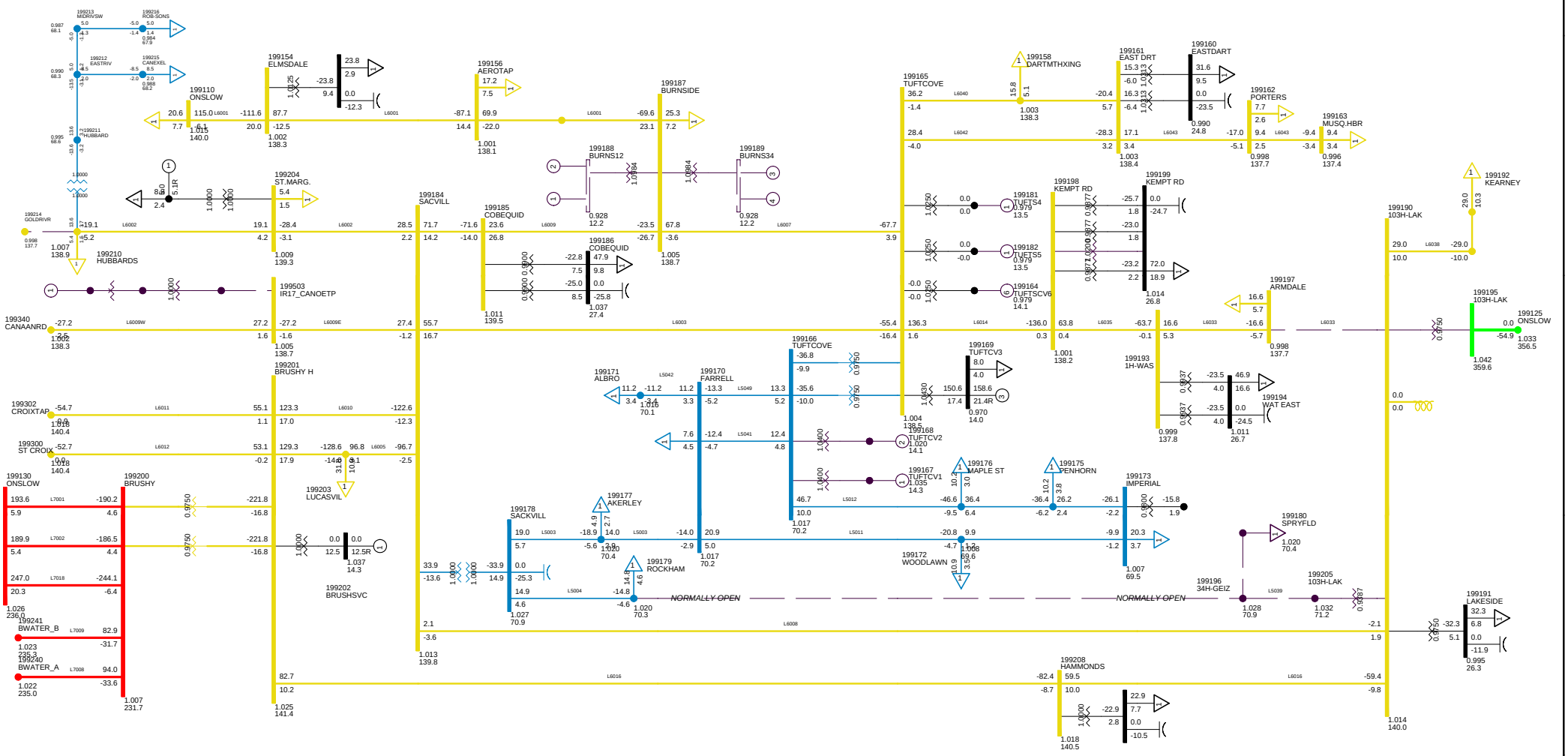

2013 SUMMER PEAK NS IMPORT 250 MW
C33 LOSE 103H-B61
METRO ZONE TUE, DEC 09 2008 22:40

Bus - VOLTAGE (KV/PU)
Branch - MW/MVAR
Equipment - MW/MVAR
100.0%RATEA
1.050OV 0.950UV
KV: <=30.000 <=69.000 <=138.000 <=230.000 <=345.000 >345.000

Figure __

Total Wind Gen: 290.1 MW | Gross Tupper 165.0 MW | Gross Wreck Cove 0.0 MW

Gross Lingan 625.0 MW | Gross Trenton 0.0 MW | Gross Gas Turbine 0.0 MW

Gross Pt Aconi 185.0 MW | Gross Tuft's Cove 158.6 MW | Gross Small Hydro 42.9 MW

Net Stora Load 178.9 MW | Total BMPC Load 108.5 MW

NSX -226.3 MW

CBX 592.2 MW

ONI 560.1 MW

ONS 741.2 MW

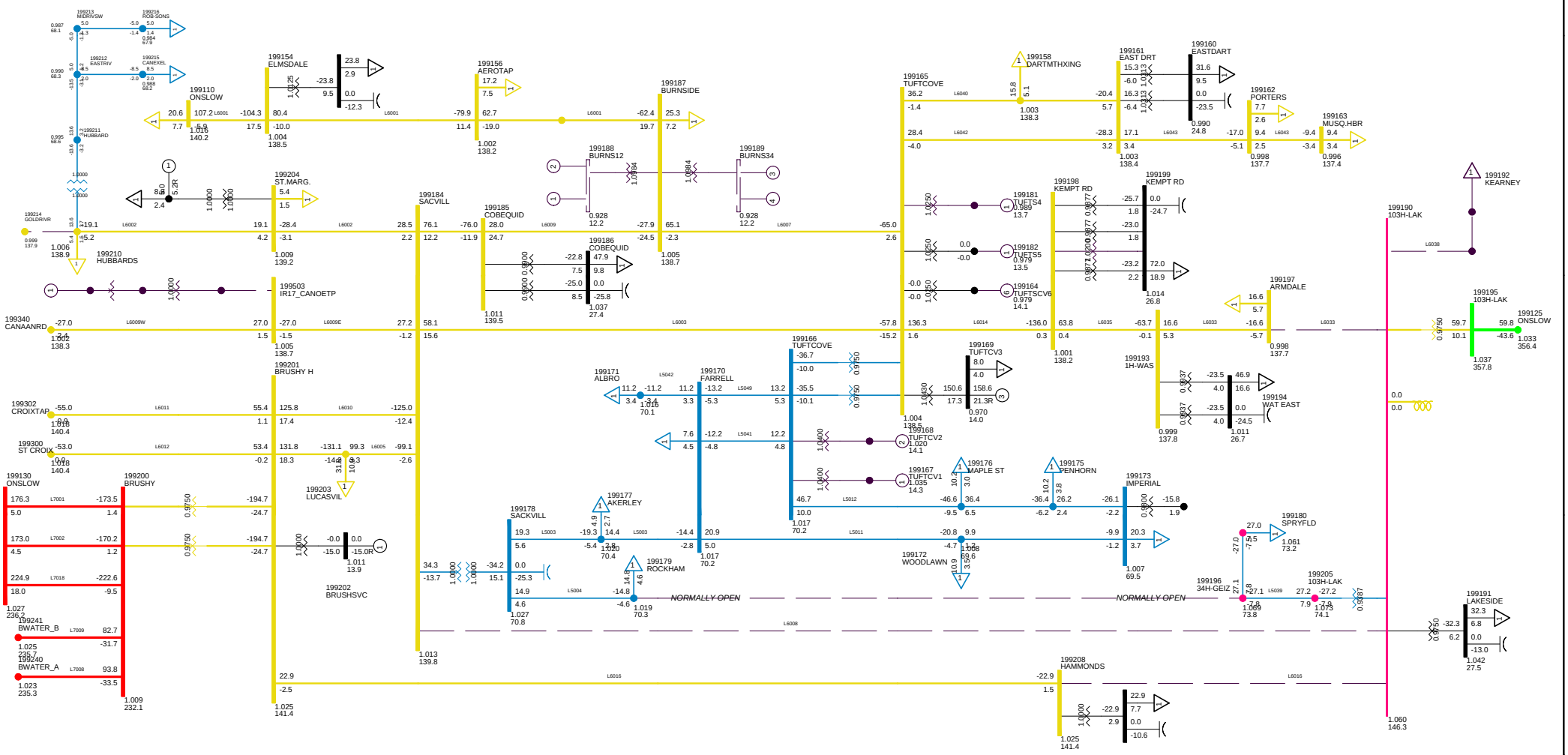

2013 SUMMER PEAK NS IMPORT 250 MW
C34 LOSE 103H-B62
METRO ZONE TUE, DEC 09 2008 22:40

Bus - VOLTAGE (KV/PU)
Branch - MW/MVAR
Equipment - MW/MVAR
100.0%RATEA
1.050OV 0.950UV
KV: <=30.000 <=69.000 <=138.000 <=230.000 <=345.000 >345.000

Figure __

Total Wind Gen: 290.1 MW | Gross Tupper 165.0 MW | Gross Wreck Cove 0.0 MW

Gross Lingan 625.0 MW | Gross Trenton 0.0 MW | Gross Gas Turbine 0.0 MW

Gross Pt Aconi 185.0 MW | Gross Tuft's Cove 158.6 MW | Gross Small Hydro 42.9 MW

Net Stora Load 178.9 MW | Total BMPC Load 108.5 MW

NSX -249.7 MW

CBX 592.3 MW

ONI 560.4 MW

ONS 765.2 MW

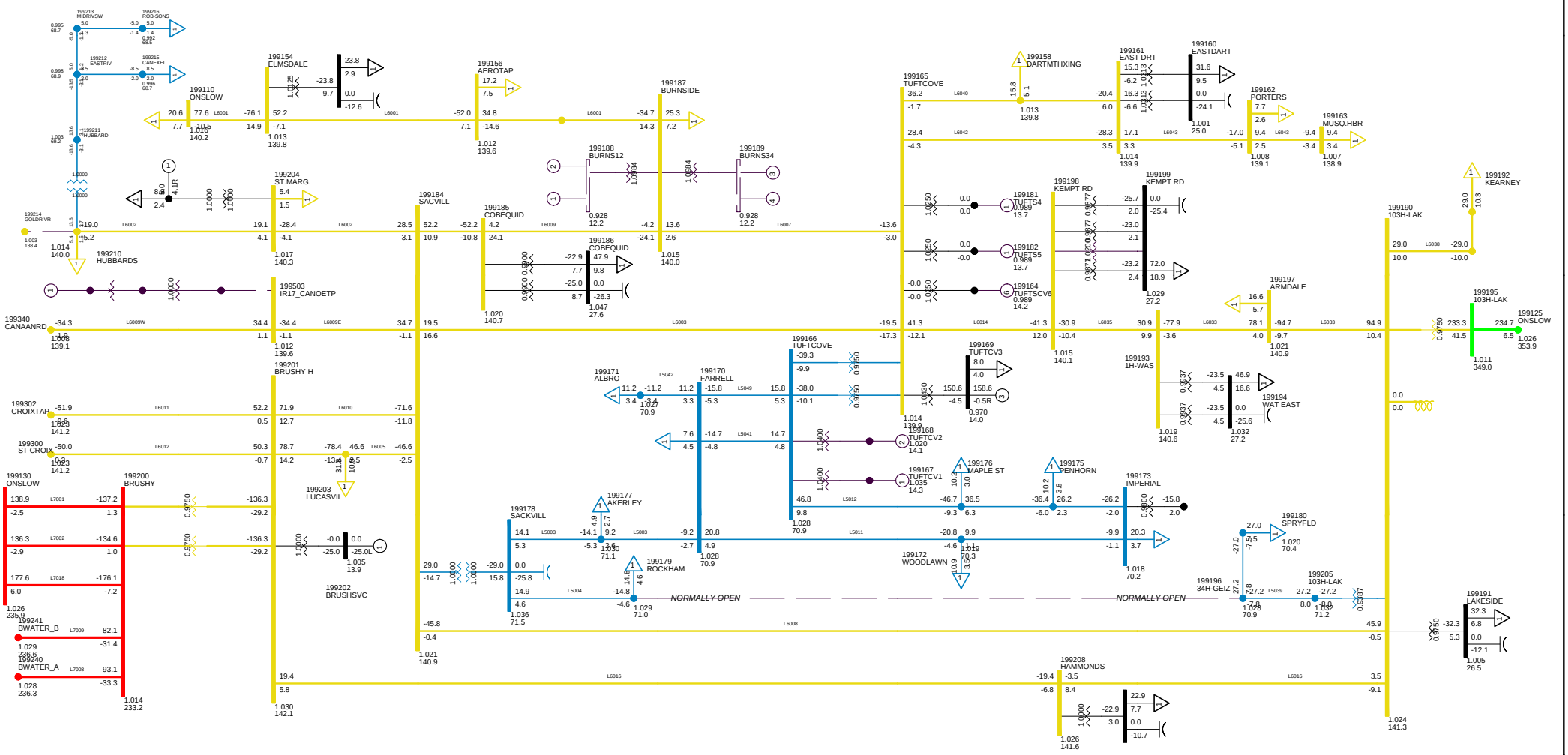

2010 SUMMER PEAK, NSLOAD=1700
NS-NB=-250; NB-NE=1000; CBX=592; ONI=560 ONS=765
METRO ZONE TUE, DEC 09 2008 22:40

Bus - VOLTAGE (KV/PU)
Branch - MW/MVAR
Equipment - MW/MVAR
100.0%RATEA
1.050OV 0.950UV
KV: <=30.000 <=69.000 <=138.000 <=230.000 <=345.000 >345.000

Figure __

Total Wind Gen: 290.1 MW
Gross Tupper 165.0 MW
Gross Wreck Cove 0.0 MW
Gross Lingan 625.0 MW
Gross Trenton 0.0 MW
Gross Gas Turbine 0.0 MW
Gross Pt Aconi 185.0 MW
Gross Tuft's Cove 158.6 MW
Gross Small Hydro 42.9 MW
Net Stora Load 178.9 MW
Total BMPC Load 108.6 MW

NSX -217.8 MW
CBX 592.6 MW
ONI 560.7 MW
ONS 733.8 MW

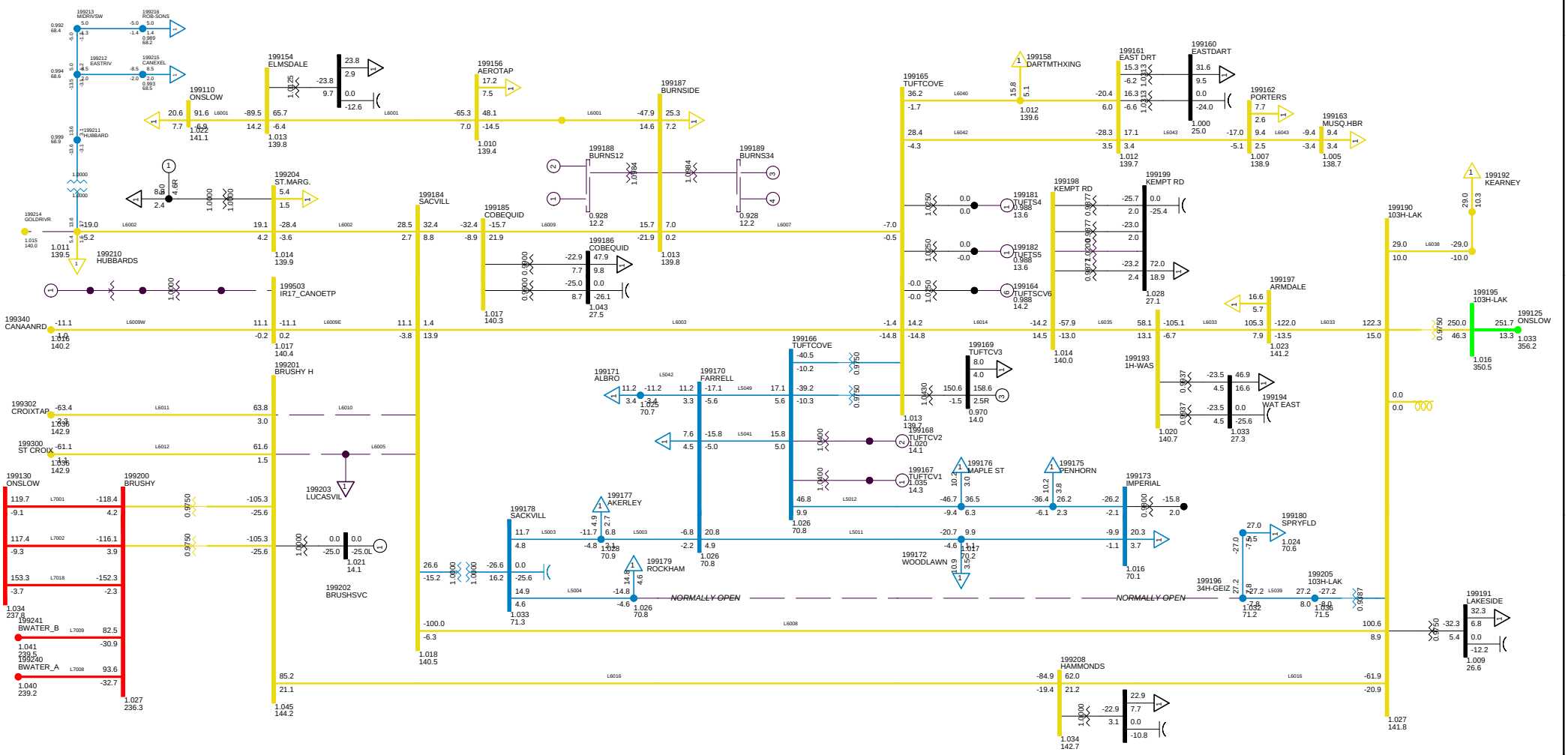

2013 SUMMER PEAK NS IMPORT 250 MW
C35 DCT L6005+L6010
METRO ZONE TUE, DEC 09 2008 22:40

Bus - VOLTAGE (KV/PU)
Branch - MW/MVAR
Equipment - MW/MVAR
100.0%RATEA
1.050OV 0.950UV
KV: <=30.000 <=69.000 <=138.000 <=230.000 <=345.000 >345.000

Figure __

Total Wind Gen: 290.1 MW | Gross Tupper 165.0 MW | Gross Wreck Cove 0.0 MW

Gross Lingan 625.0 MW | Gross Trenton 0.0 MW | Gross Gas Turbine 0.0 MW

Gross Pt Aconi 185.0 MW | Gross Tuft's Cove 158.6 MW | Gross Small Hydro 42.9 MW

Net Stora Load 178.9 MW | Total BMPC Load 108.5 MW

NSX -216.6 MW

CBX 592.5 MW

ONI 560.6 MW

ONS 732.5 MW

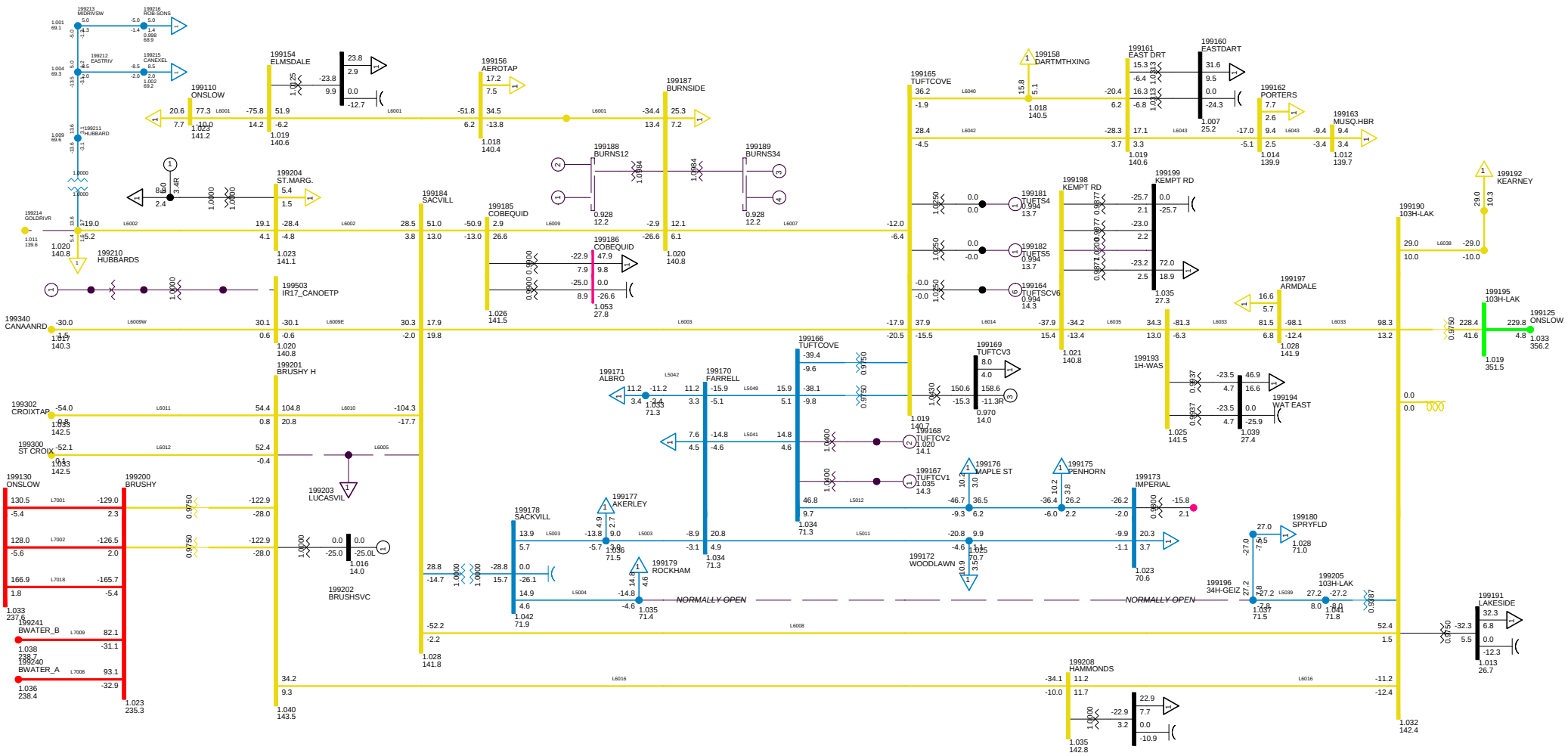

2010 SUMMER PEAK, NSLOAD=1700
NS-NB=-250; NB-NE=1000; CBX=592; ONI=560 ONS=765
METRO ZONE TUE, DEC 09 2008 22:41

Bus - VOLTAGE (KV/PU)
Branch - MW/MVAR
Equipment - MW/MVAR
100.0%RATEA
1.050OV 0.950UV
KV: <=30.000 <=69.000 <=138.000 <=230.000 <=345.000 >345.000

Figure __

Total Wind Gen: 290.1 MW
Gross Tupper 165.0 MW
Gross Wreck Cove 0.0 MW
Gross Lingan 625.0 MW
Gross Trenton 0.0 MW
Gross Gas Turbine 0.0 MW
Gross Pt Aconi 185.0 MW
Gross Tuft's Cove 158.6 MW
Gross Small Hydro 42.9 MW
Net Stora Load 178.9 MW
Total BMPC Load 108.6 MW

NSX -193.0 MW
CBX 592.6 MW
ONI 560.7 MW
ONS 709.1 MW

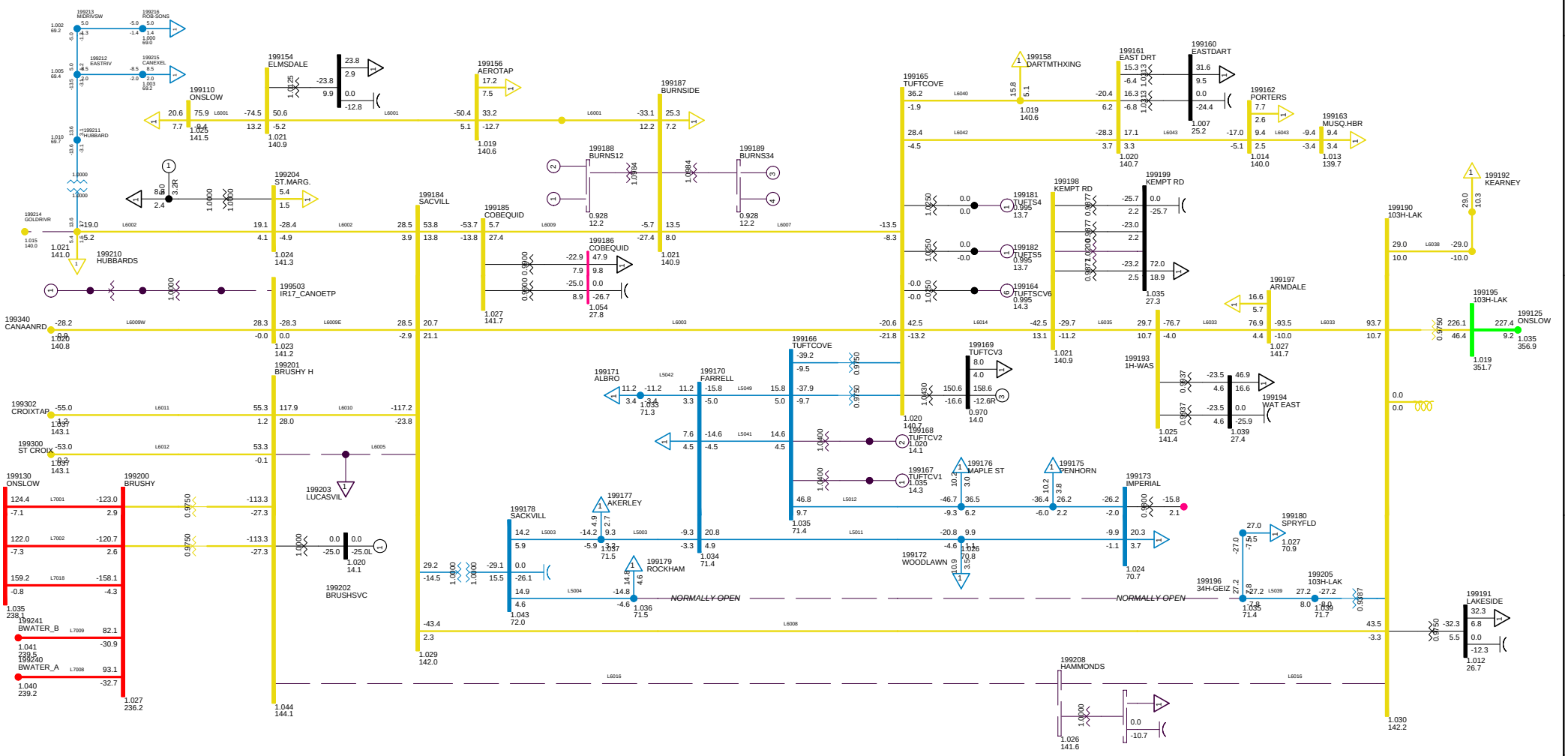

2013 SUMMER PEAK NS IMPORT 250 MW
C37 DCT L6005 L6016
METRO ZONE TUE, DEC 09 2008 22:41

Bus - VOLTAGE (KV/PU)
Branch - MW/MVAR
Equipment - MW/MVAR
100.0%RATEA
1.050OV 0.950UV
KV: <=30.000 <=69.000 <=138.000 <=230.000 <=345.000 >345.000

Figure __

Total Wind Gen: 290.1 MW | Gross Tupper 165.0 MW | Gross Wreck Cove 0.0 MW

Gross Lingan 625.0 MW | Gross Trenton 0.0 MW | Gross Gas Turbine 0.0 MW

Gross Pt Aconi 185.0 MW | Gross Tuft's Cove 158.6 MW | Gross Small Hydro 42.9 MW

Net Stora Load 178.9 MW | Total BMPC Load 108.5 MW

NSX -199.6 MW

CBX 592.5 MW

ONI 560.7 MW

ONS 715.7 MW

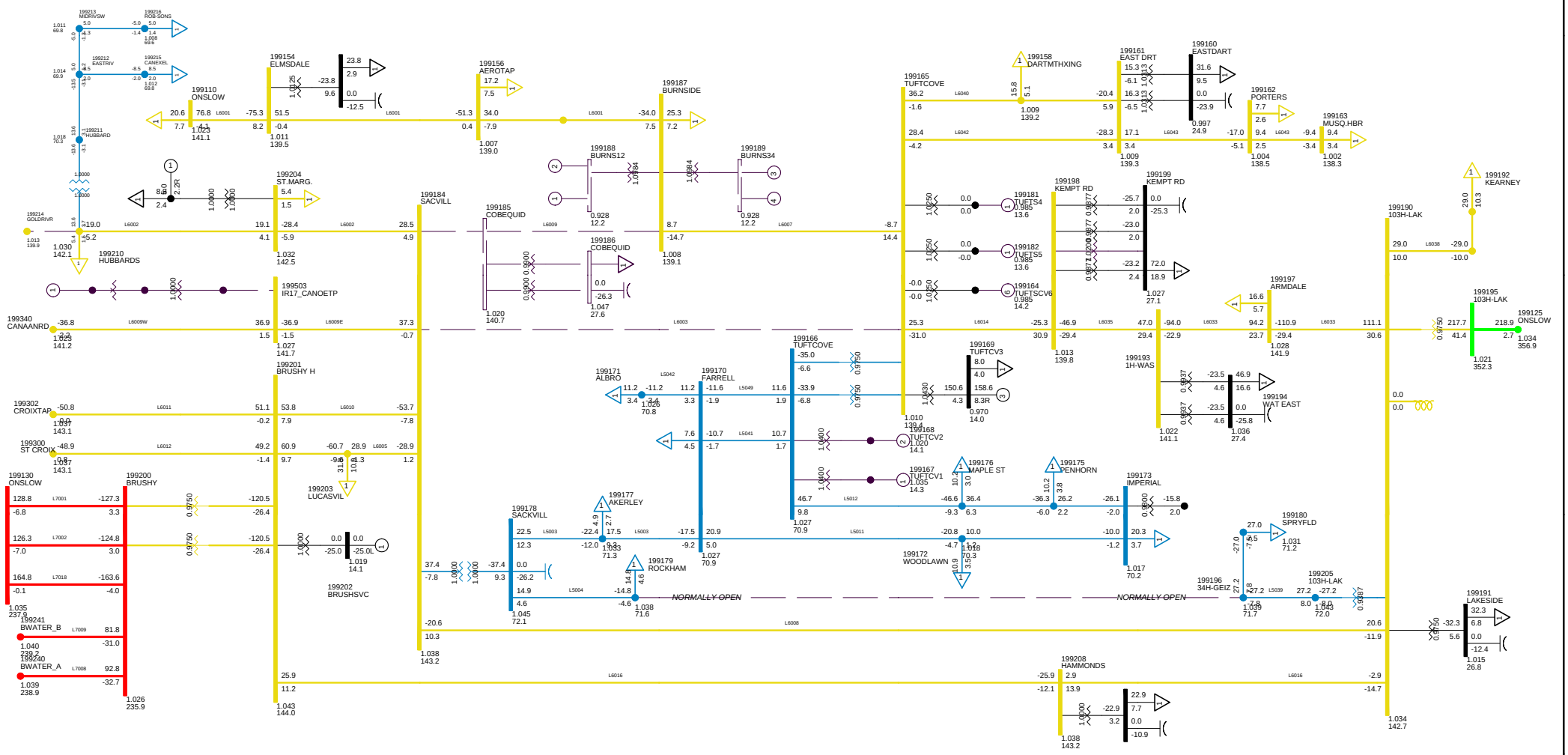

2013 SUMMER PEAK NS IMPORT 250 MW
C38 DCT L6003 L6009
METRO ZONE TUE, DEC 09 2008 22:41

Bus - VOLTAGE (KV/PU)
Branch - MW/MVAR
Equipment - MW/MVAR
100.0%RATEA
1.050OV 0.950UV
KV: <=30.000 <=69.000 <=138.000 <=230.000 <=345.000 >345.000

Figure __

Total Wind Gen: 290.1 MW
Gross Tupper 165.0 MW
Gross Wreck Cove 0.0 MW
Gross Lingan 625.0 MW
Gross Trenton 0.0 MW
Gross Gas Turbine 0.0 MW
Gross Pt Aconi 185.0 MW
Gross Tuft's Cove 158.6 MW
Gross Small Hydro 42.9 MW
Net Stora Load 178.9 MW
Total BMPC Load 108.5 MW

NSX -249.7 MW
CBX 592.4 MW
ONI 560.4 MW
ONS 765.2 MW

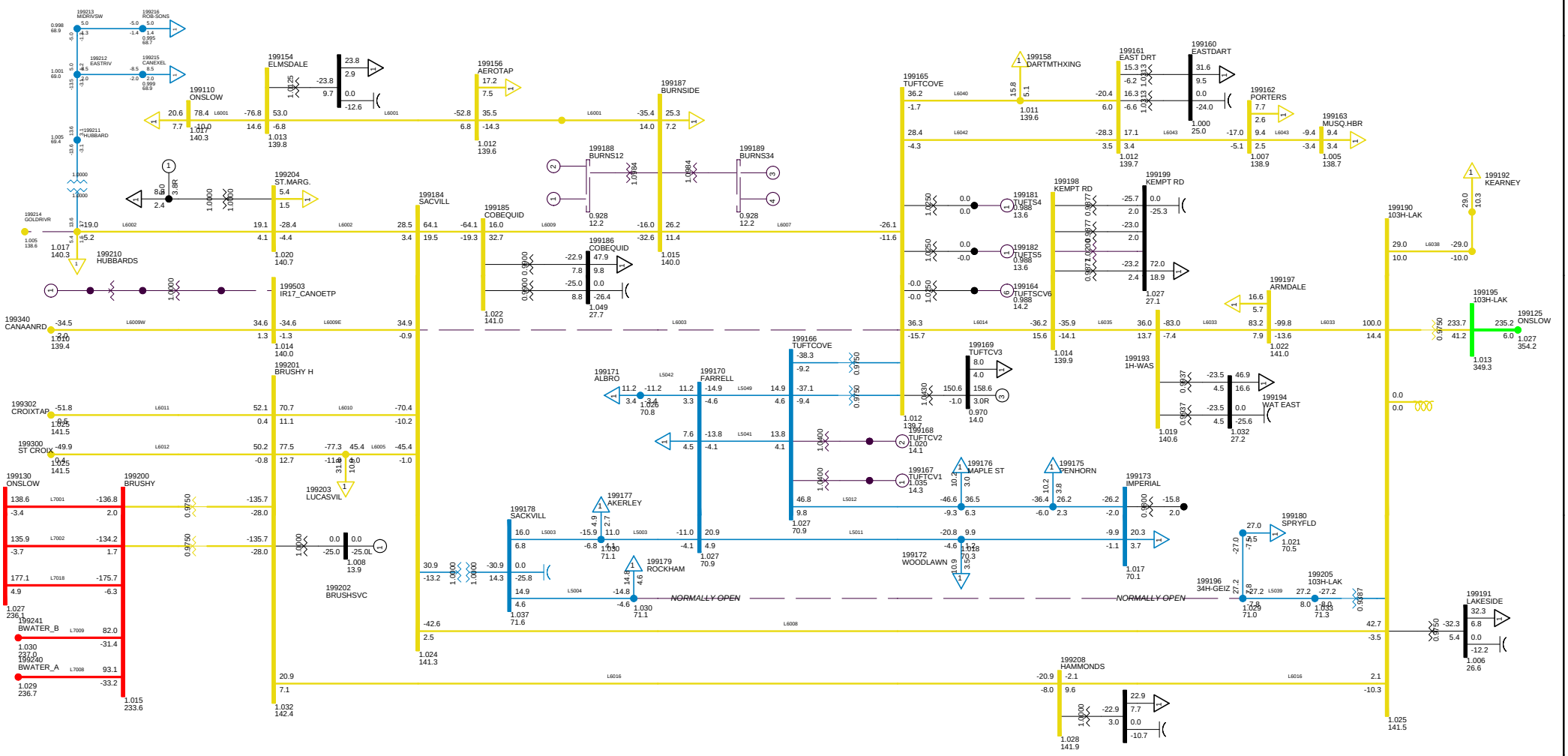

2013 SUMMER PEAK NS IMPORT 250 MW
C39 DCT L6003 L6007
METRO ZONE TUE, DEC 09 2008 22:41

Bus - VOLTAGE (KV/PU)
Branch - MW/MVAR
Equipment - MW/MVAR
100.0%RATEA
1.050OV 0.950UV
KV: <=30.000 <=69.000 <=138.000 <=230.000 <=345.000 >345.000

Figure __

Total Wind Gen: 259.5 MW
Gross Tupper 165.0 MW
Gross Wreck Cove 0.0 MW
Gross Lingan 625.0 MW
Gross Trenton 0.0 MW
Gross Gas Turbine 0.0 MW
Gross Pt Aconi 185.0 MW
Gross Tuft's Cove 158.6 MW
Gross Small Hydro 23.9 MW
Net Stora Load 178.9 MW
Total BMPC Load 0.0 MW

NSX -64.9 MW
CBX 592.6 MW
ONI 560.8 MW
ONS 581.3 MW

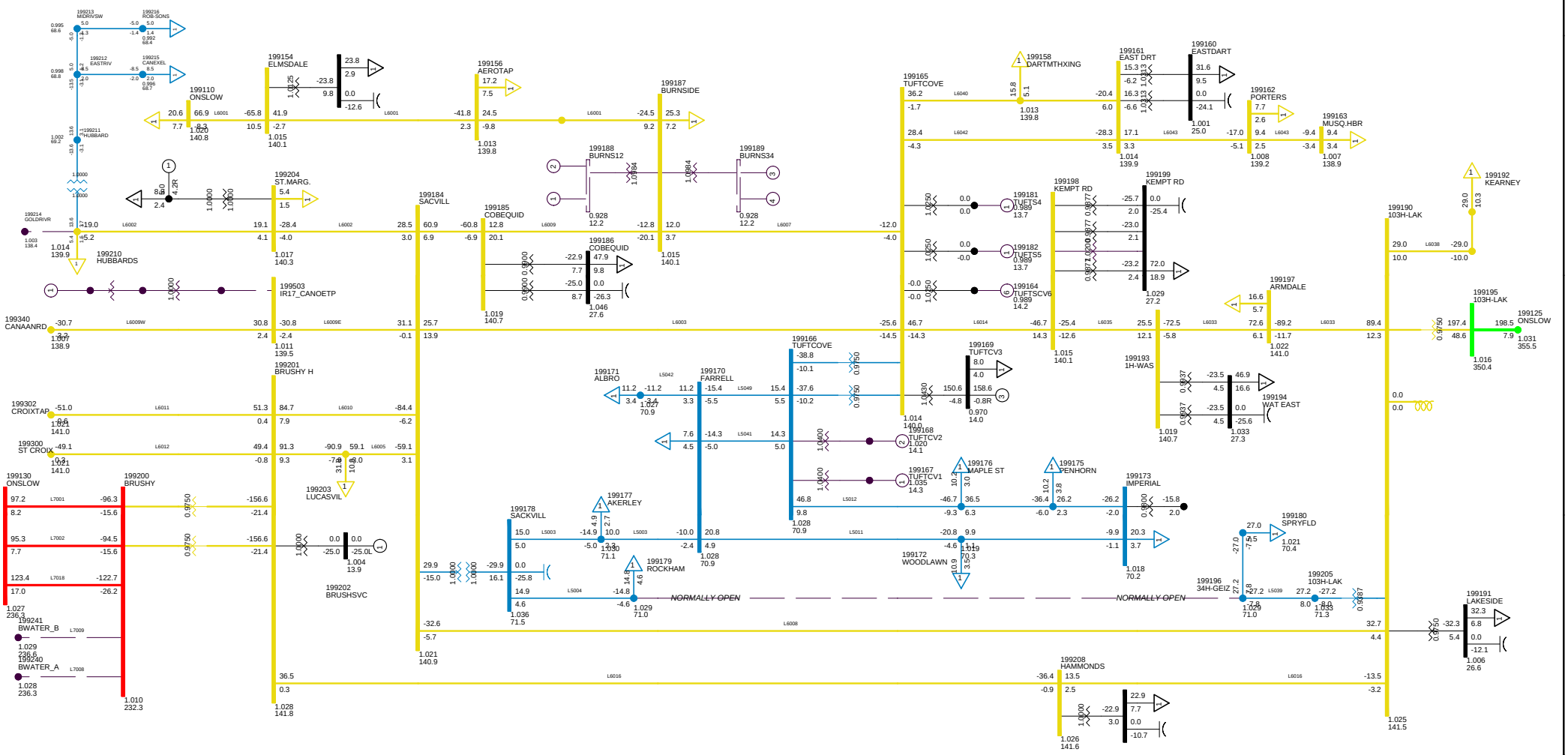

2013 SUMMER PEAK NS IMPORT 250 MW
C40 DCT L7008 L7009 ISOLATES WEST
METRO ZONE TUE, DEC 09 2008 22:41

Bus - VOLTAGE (KV/PU)
Branch - MW/MVAR
Equipment - MW/MVAR
100.0%RATEA
1.050OV 0.950UV
KV: <=30.000 <=69.000 <=138.000 <=230.000 <=345.000 >345.000

Figure __

Total Wind Gen: 290.1 MW | Gross Tupper 165.0 MW | Gross Wreck Cove 0.0 MW

Gross Lingan 625.0 MW | Gross Trenton 0.0 MW | Gross Gas Turbine 0.0 MW

Gross Pt Aconi 185.0 MW | Gross Tuft's Cove 158.6 MW | Gross Small Hydro 42.9 MW

Net Stora Load 178.9 MW | Total BMPC Load 108.6 MW

NSX -193.0 MW

CBX 592.6 MW

ONI 560.7 MW

ONS 709.1 MW

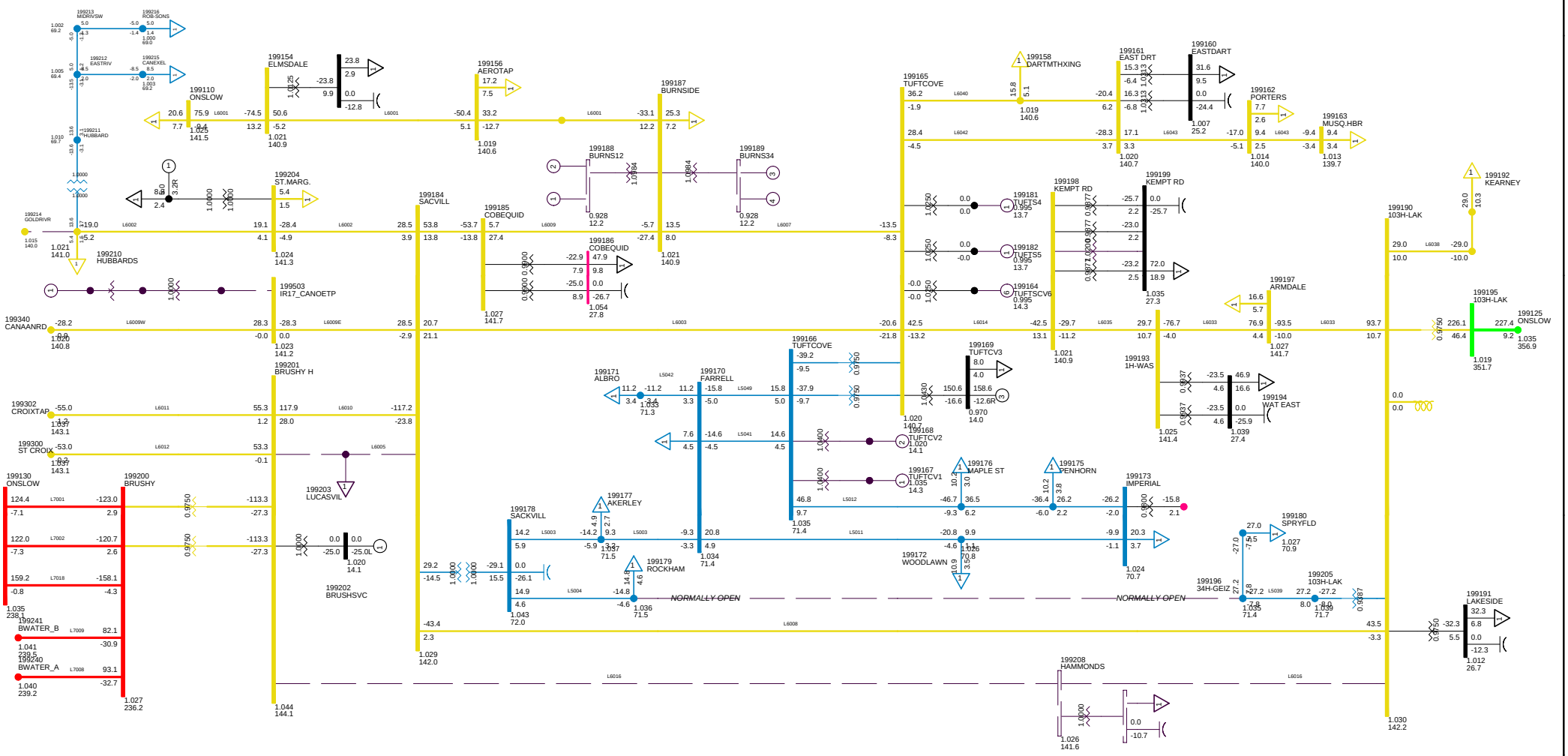

2013 SUMMER PEAK NS IMPORT 250 MW
C41 1P FAULT ON L6016, BBU 622
METRO ZONE TUE, DEC 09 2008 22:41

Bus - VOLTAGE (KV/PU)
Branch - MW/MVAR
Equipment - MW/MVAR
100.0%RATEA
1.050OV 0.950UV
KV: <=30.000 <=69.000 <=138.000 <=230.000 <=345.000 >345.000

Figure __

Total Wind Gen: 290.1 MW | Gross Tupper 165.0 MW | Gross Wreck Cove 0.0 MW

Gross Lingan 625.0 MW | Gross Trenton 0.0 MW | Gross Gas Turbine 0.0 MW

Gross Pt Aconi 185.0 MW | Gross Tuft's Cove 158.6 MW | Gross Small Hydro 42.9 MW

Net Stora Load 178.9 MW | Total BMPC Load 108.5 MW

NSX -213.0 MW

CBX 592.1 MW

ONI 559.9 MW

ONS 727.7 MW

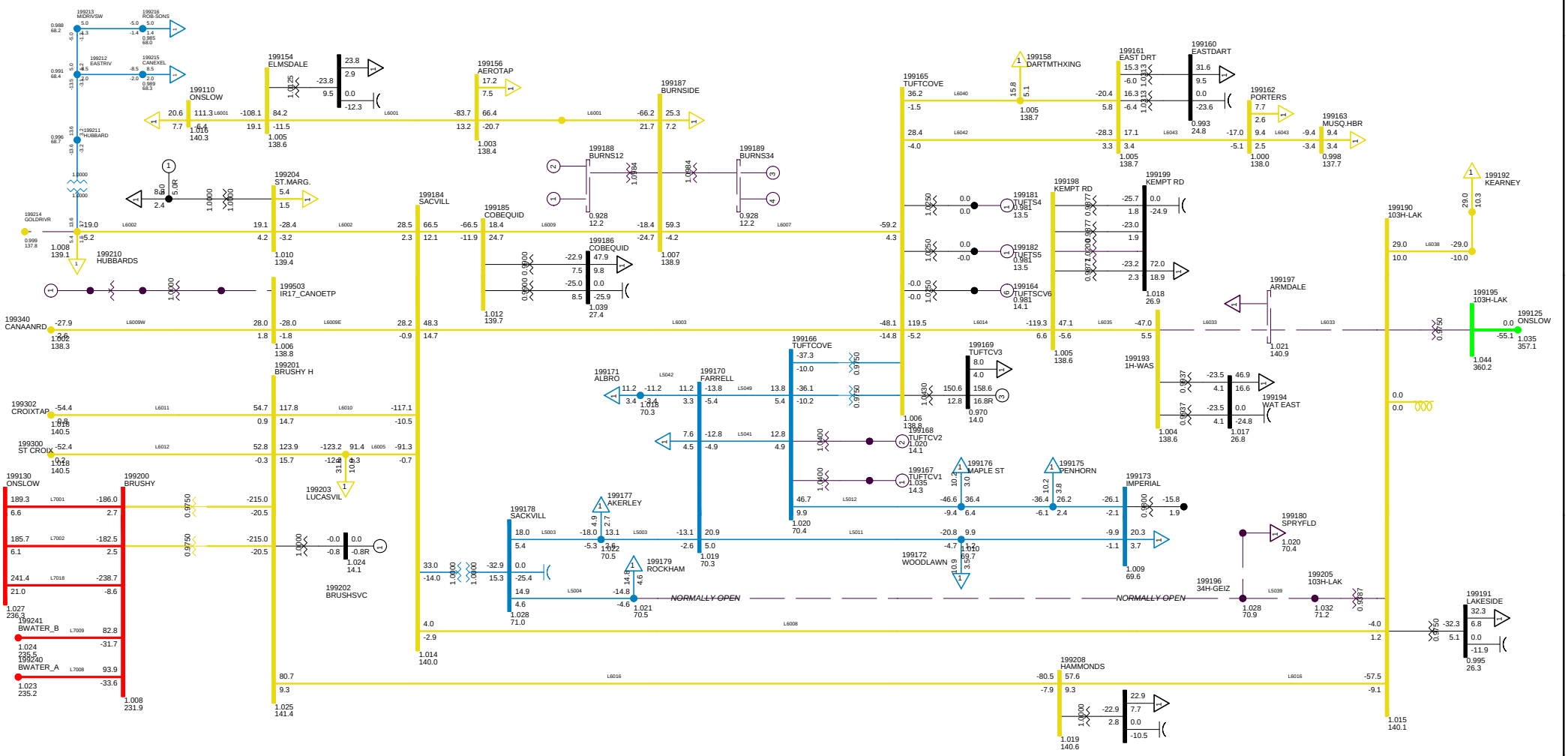

2013 SUMMER PEAK NS IMPORT 250 MW
C42 1P L6033, BBU 103H-632
METRO ZONE TUE, DEC 09 2008 22:41

Bus - VOLTAGE (KV/PU)
Branch - MW/MVAR
Equipment - MW/MVAR
100.0%RATEA
1.050OV 0.950UV
KV: <=30.000 <=69.000 <=138.000 <=230.000 <=345.000 >345.000

Figure __

Total Wind Gen: 290.1 MW
Gross Tupper 165.0 MW
Gross Wreck Cove 0.0 MW
Gross Lingan 625.0 MW
Gross Trenton 0.0 MW
Gross Gas Turbine 0.0 MW
Gross Pt Aconi 185.0 MW
Gross Tuft's Cove 158.6 MW
Gross Small Hydro 42.9 MW
Net Stora Load 178.9 MW
Total BMPC Load 108.6 MW

NSX -217.8 MW
CBX 592.6 MW
ONI 560.7 MW
ONS 733.8 MW

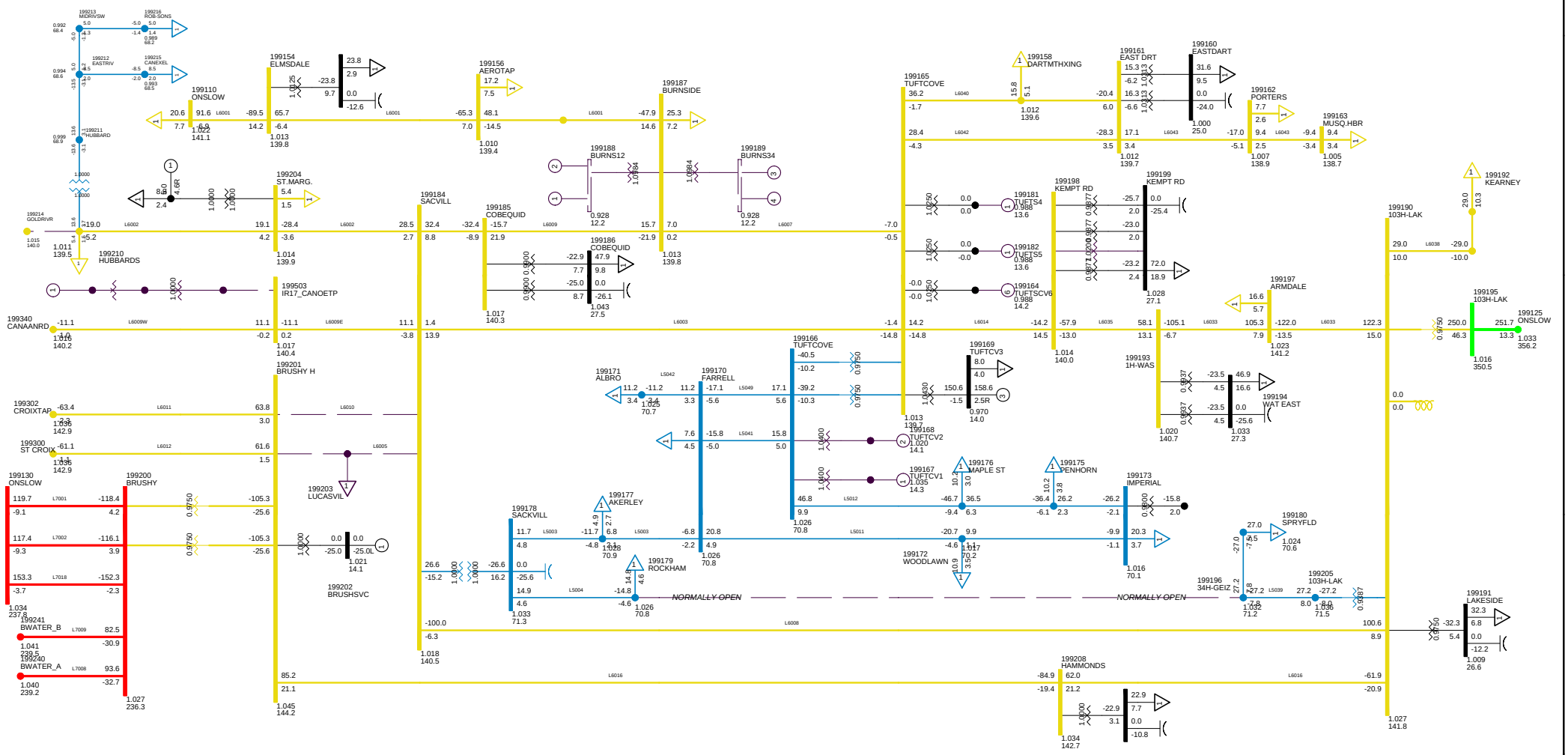

2013 SUMMER PEAK NS IMPORT 250 MW
C43 BBU L6005 L6010 90H-608
METRO ZONE TUE, DEC 09 2008 22:42

Bus - VOLTAGE (KV/PU)
Branch - MW/MVAR
Equipment - MW/MVAR
100.0%RATEA
1.050OV 0.950UV
KV: <=30.000 <=69.000 <=138.000 <=230.000 <=345.000 >345.000

Figure __

Total Wind Gen: 290.1 MW
Gross Tupper 165.0 MW
Gross Wreck Cove 0.0 MW
Gross Lingan 625.0 MW
Gross Trenton 0.0 MW
Gross Gas Turbine 0.0 MW
Gross Pt Aconi 185.0 MW
Gross Tuft's Cove 158.6 MW
Gross Small Hydro 42.9 MW
Net Stora Load 178.9 MW
Total BMPC Load 108.5 MW

NSX -199.9 MW
CBX 592.5 MW
ONI 560.6 MW
ONS 715.8 MW

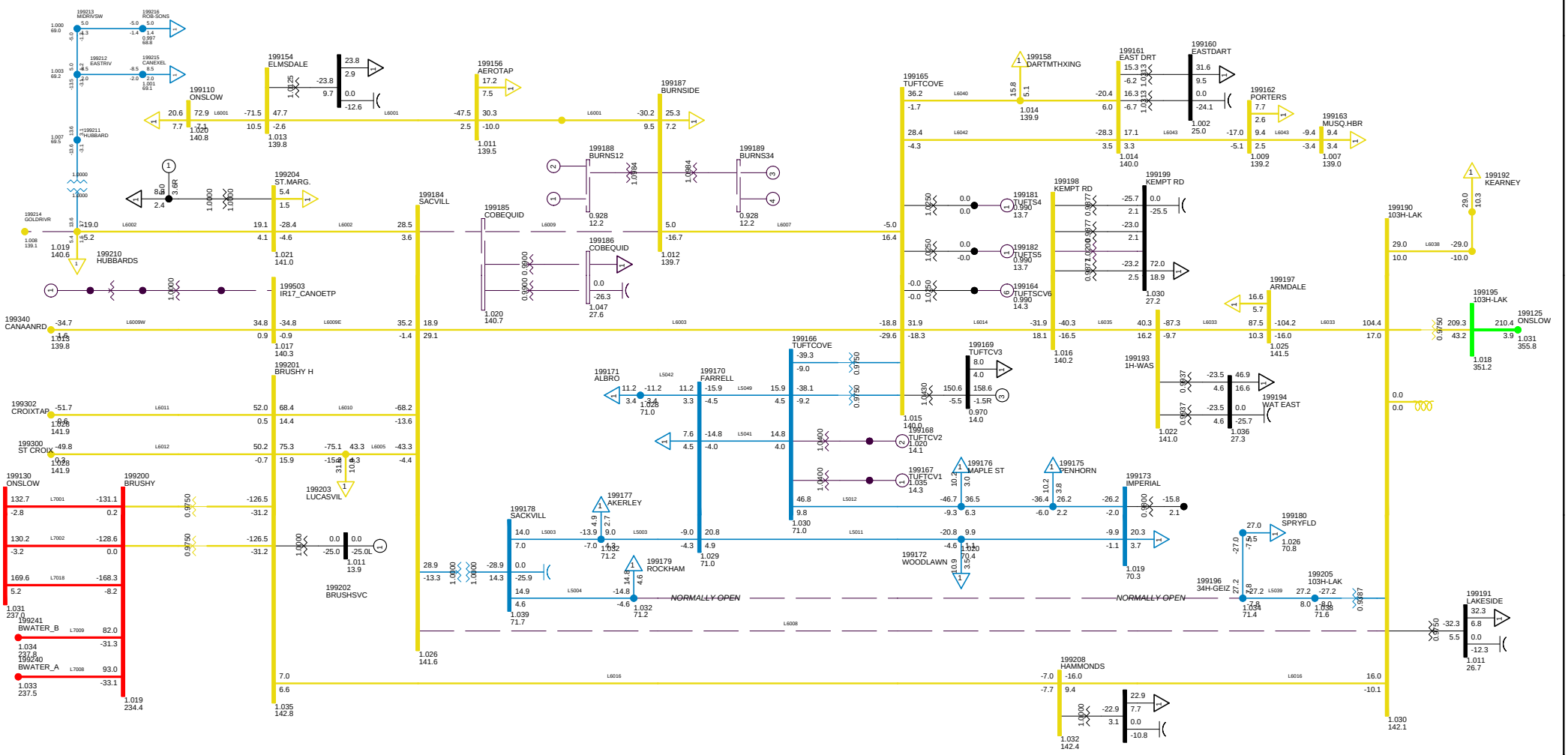

2013 SUMMER PEAK NS IMPORT 250 MW
C44 BBU L6008 L6009 90H-611
METRO ZONE TUE, DEC 09 2008 22:42

Bus - VOLTAGE (KV/PU)
Branch - MW/MVAR
Equipment - MW/MVAR
100.0%RATEA
1.050OV 0.950UV
KV: <=30.000 <=69.000 <=138.000 <=230.000 <=345.000 >345.000

Figure __

Total Wind Gen: 290.1 MW
Gross Tupper 165.0 MW
Gross Wreck Cove 0.0 MW
Gross Lingan 625.0 MW
Gross Trenton 0.0 MW
Gross Gas Turbine 0.0 MW
Gross Pt Aconi 185.0 MW
Gross Tuft's Cove 158.6 MW
Gross Small Hydro 42.9 MW
Net Stora Load 178.9 MW
Total BMPC Load 108.5 MW

NSX -163.8 MW
CBX 592.5 MW
ONI 560.7 MW
ONS 679.9 MW

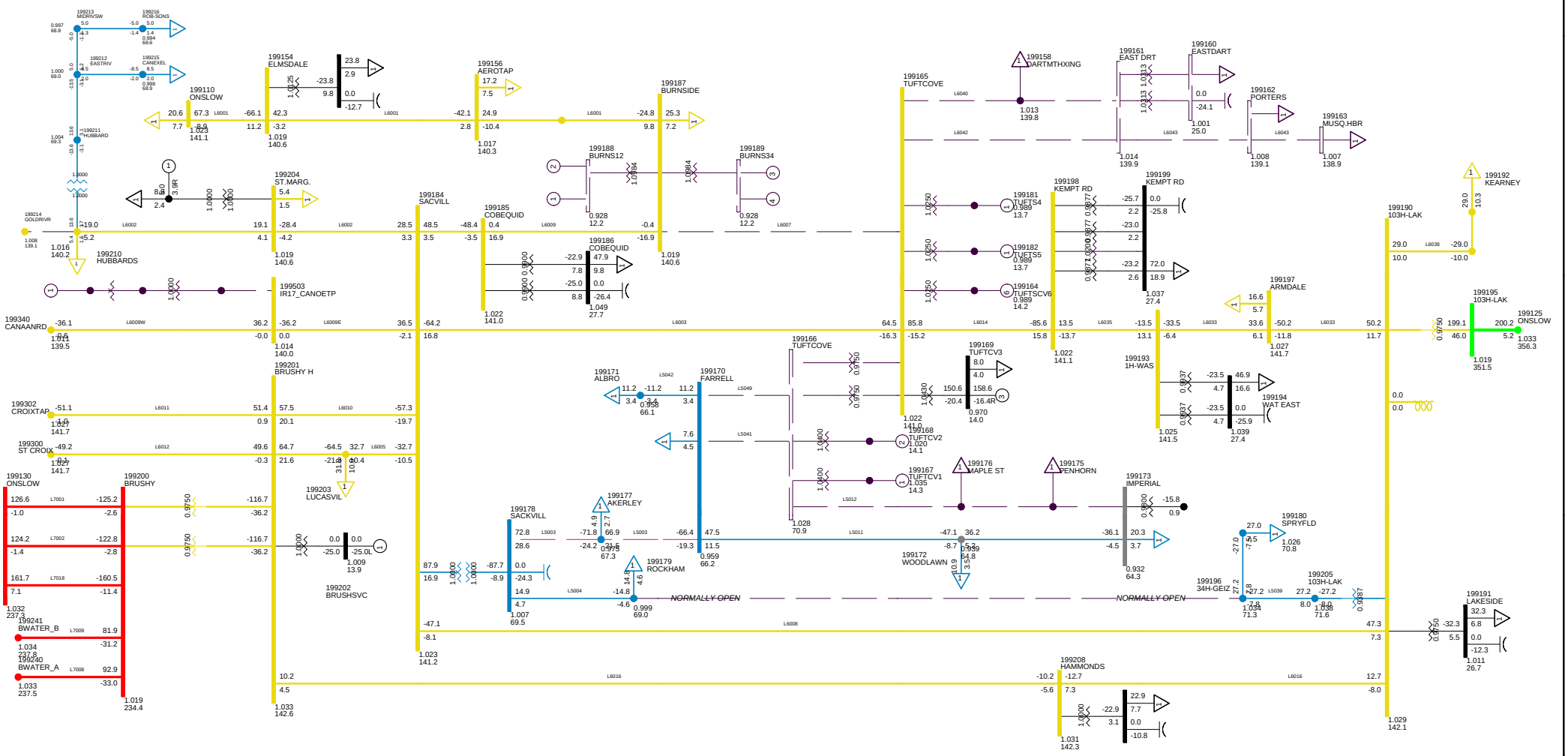

2013 SUMMER PEAK NS IMPORT 250 MW
C45 BBU ON 91H-523
METRO ZONE TUE, DEC 09 2008 22:42

Bus - VOLTAGE (KV/PU)
Branch - MW/MVAR
Equipment - MW/MVAR
100.0%RATEA
1.050OV 0.950UV
KV: <=30.000 <=69.000 <=138.000 <=230.000 <=345.000 >345.000

Figure __

Total Wind Gen: 290.1 MW
Gross Tupper 165.0 MW
Gross Wreck Cove 0.0 MW
Gross Lingan 625.0 MW
Gross Trenton 0.0 MW
Gross Gas Turbine 0.0 MW
Gross Pt Aconi 185.0 MW
Gross Tuft's Cove 158.6 MW
Gross Small Hydro 42.9 MW
Net Stora Load 178.9 MW
Total BMPC Load 108.5 MW

NSX -173.0 MW
CBX 592.6 MW
ONI 560.7 MW
ONS 689.2 MW

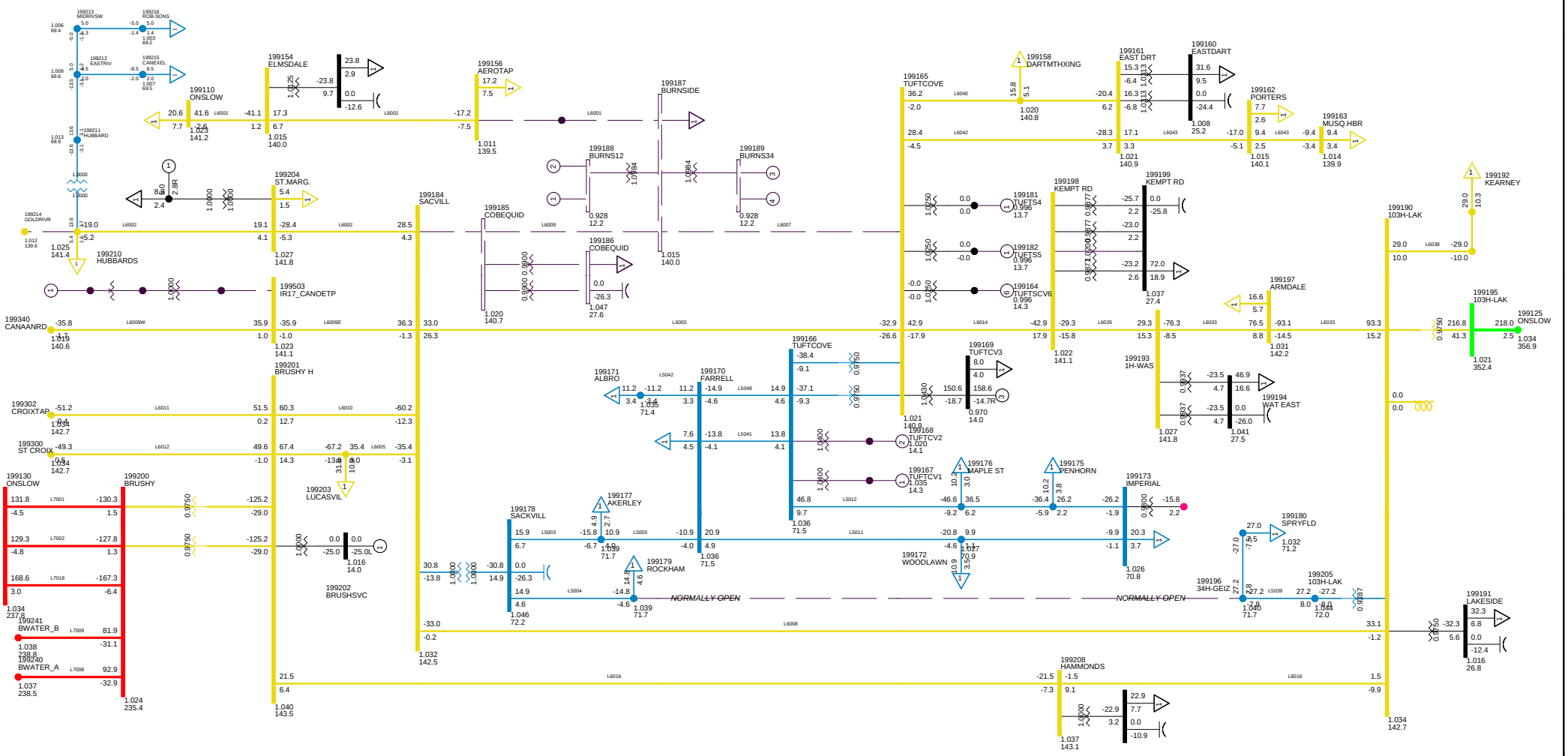

2013 SUMMER PEAK NS IMPORT 250 MW
C46 1P L6009 BBU ON 108H 607
METRO ZONE TUE, DEC 09 2008 22:42

Bus - VOLTAGE (KV/PU)
Branch - MW/MVAR
Equipment - MW/MVAR
100.0%RATEA
1.050OV 0.950UV
KV: <=30.000 <=69.000 <=138.000 <=230.000 <=345.000 >345.000

Figure __

Total Wind Gen: 290.1 MW
Gross Tupper 165.0 MW
Gross Wreck Cove 0.0 MW
Gross Lingan 625.0 MW
Gross Trenton 0.0 MW
Gross Gas Turbine 0.0 MW
Gross Pt Aconi 185.0 MW
Gross Tuft's Cove 158.6 MW
Gross Small Hydro 42.9 MW
Net Stora Load 178.9 MW
Total BMPC Load 108.5 MW

NSX -166.2 MW
CBX 592.2 MW
ONI 560.1 MW
ONS 681.4 MW

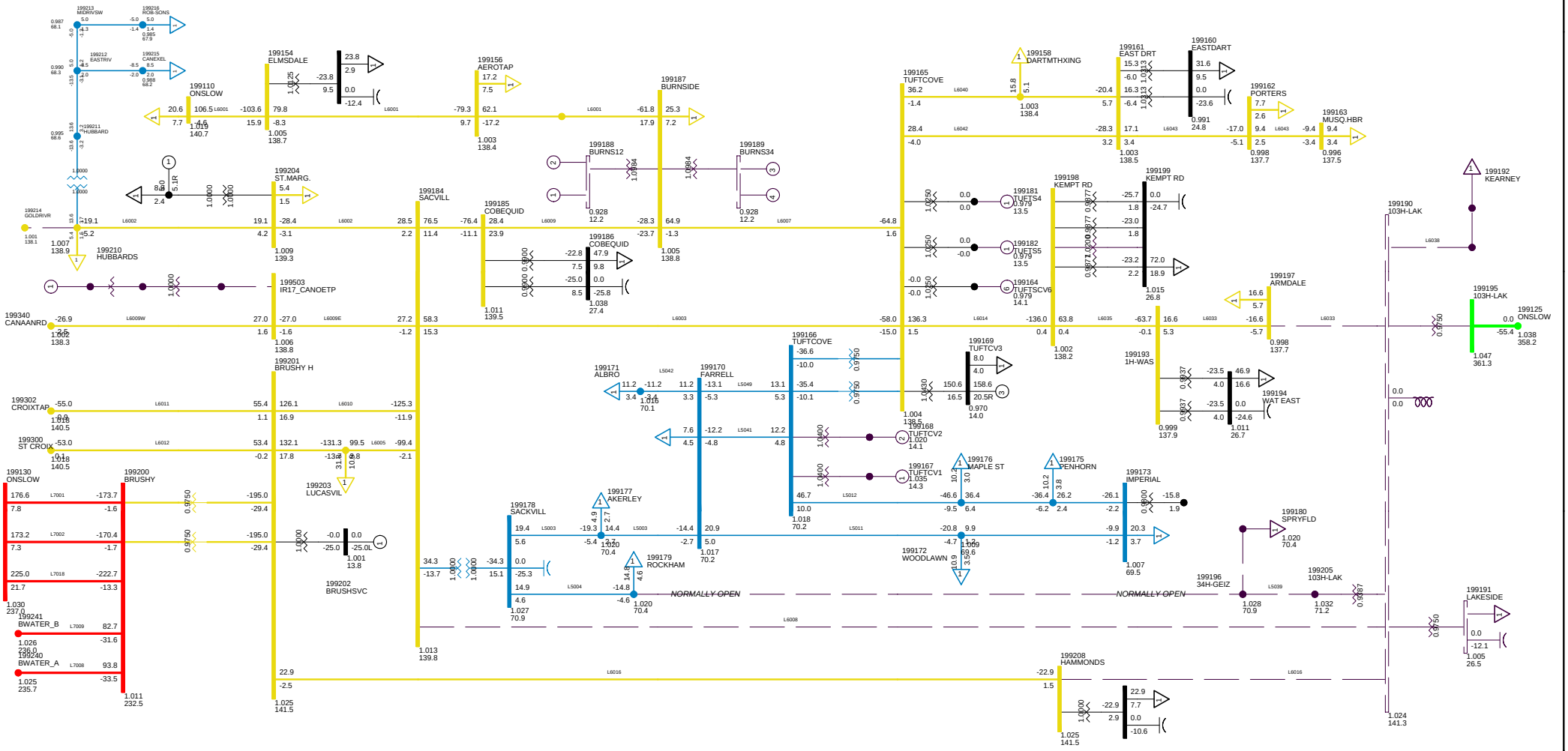

2013 SUMMER PEAK NS IMPORT 250 MW
C47 1P 103H-600
METRO ZONE TUE, DEC 09 2008 22:42

Bus - VOLTAGE (KV/PU)
Branch - MW/MVAR
Equipment - MW/MVAR
100.0%RATEA
1.050OV 0.950UV
KV: <=30.000 <=69.000 <=138.000 <=230.000 <=345.000 >345.000

Figure __

Total Wind Gen: 290.1 MW | Gross Tupper 165.0 MW | Gross Wreck Cove 0.0 MW

Gross Lingan 625.0 MW | Gross Trenton 0.0 MW | Gross Gas Turbine 0.0 MW

Gross Pt Aconi 185.0 MW | Gross Tuft's Cove 158.6 MW | Gross Small Hydro 42.9 MW

Net Stora Load 178.9 MW | Total BMPC Load 108.5 MW

NSX -249.9 MW

CBX 592.3 MW

ONI 560.4 MW

ONS 765.4 MW

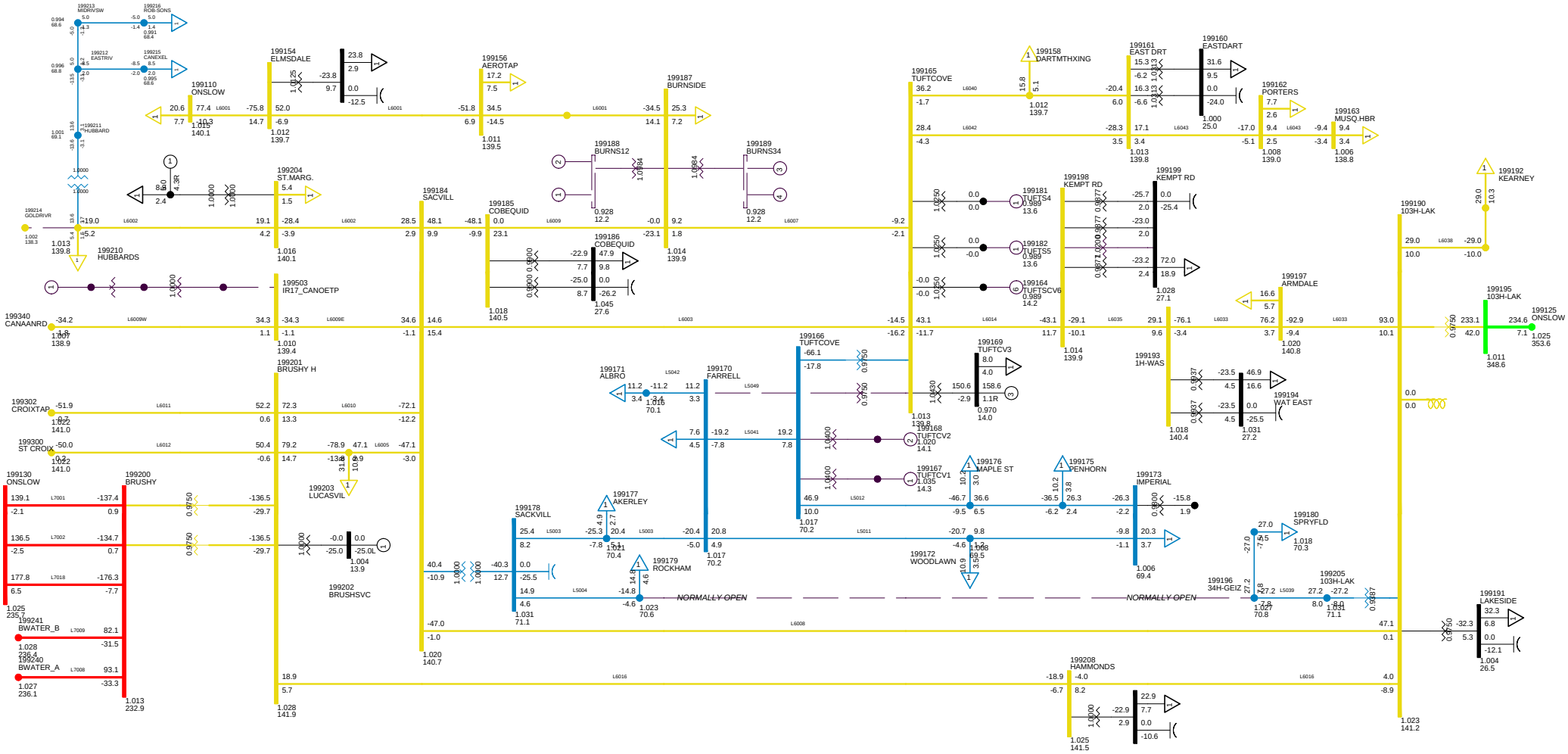

2013 SUMMER PEAK NS IMPORT 250 MW
C48 1P ON BREAKER 91H-523
METRO ZONE TUE, DEC 09 2008 22:42

Bus - VOLTAGE (KV/PU)
Branch - MW/MVAR
Equipment - MW/MVAR
100.0%RATEA
1.050OV 0.950UV
KV: <=30.000 <=69.000 <=138.000 <=230.000 <=345.000 >345.000

Figure __

Total Wind Gen: 290.1 MW
Gross Tupper 165.0 MW
Gross Wreck Cove 0.0 MW
Gross Lingan 625.0 MW
Gross Trenton 0.0 MW
Gross Gas Turbine 0.0 MW
Gross Pt Aconi 185.0 MW
Gross Tuft's Cove 158.6 MW
Gross Small Hydro 42.9 MW
Net Stora Load 178.9 MW
Total BMPC Load 108.5 MW

NSX -174.4 MW
CBX 592.6 MW
ONI 560.7 MW
ONS 690.5 MW

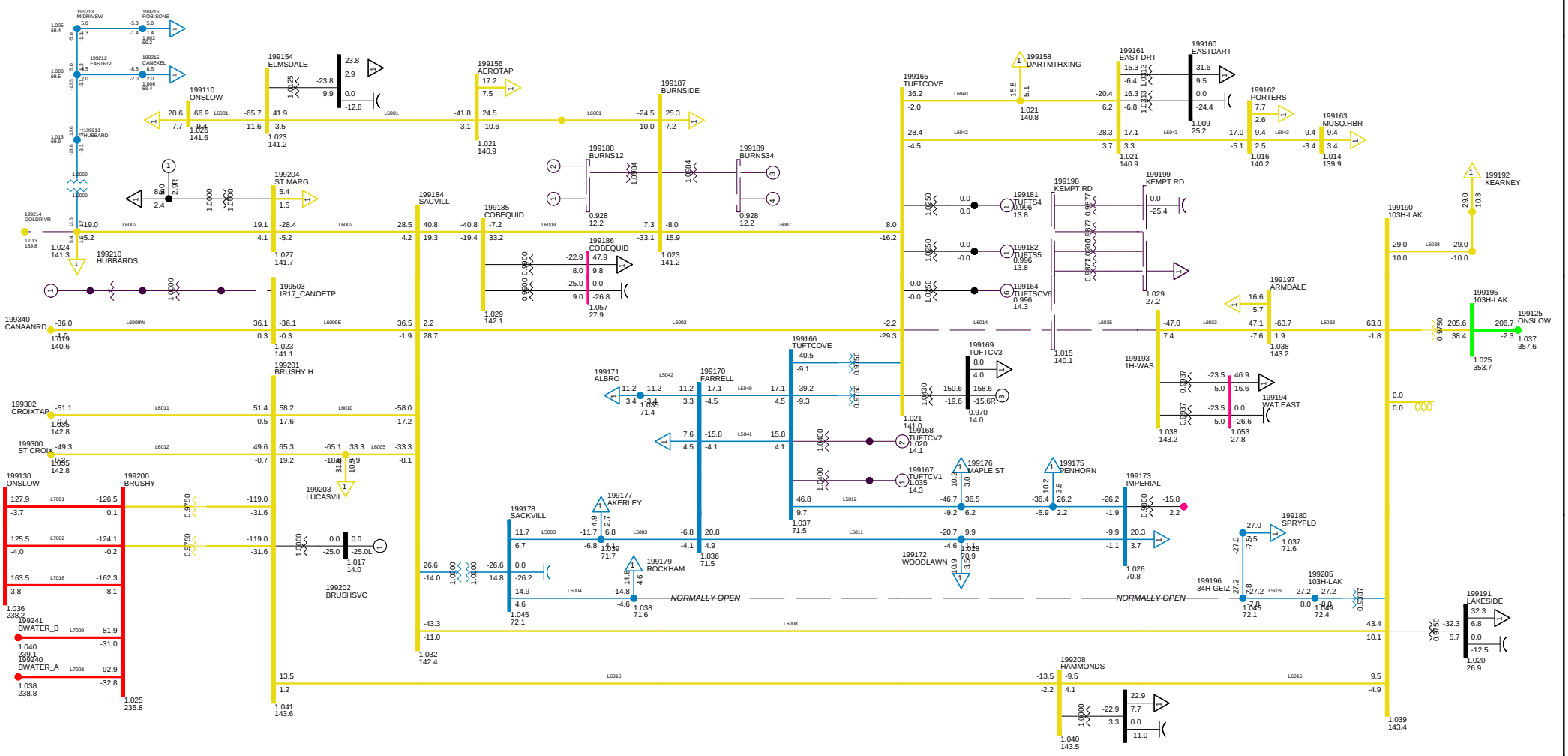

2013 SUMMER PEAK NS IMPORT 250 MW
C49 1-PH ON 104H-600
METRO ZONE TUE, DEC 09 2008 22:43

Bus - VOLTAGE (KV/PU)
Branch - MW/MVAR
Equipment - MW/MVAR
100.0%RATEA
1.050OV 0.950UV
KV: <=30.000 <=69.000 <=138.000 <=230.000 <=345.000 >345.000

Figure __

NSX -249.7 MW

CBX 592.3 MW

ONI 560.4 MW

ONS 765.2 MW

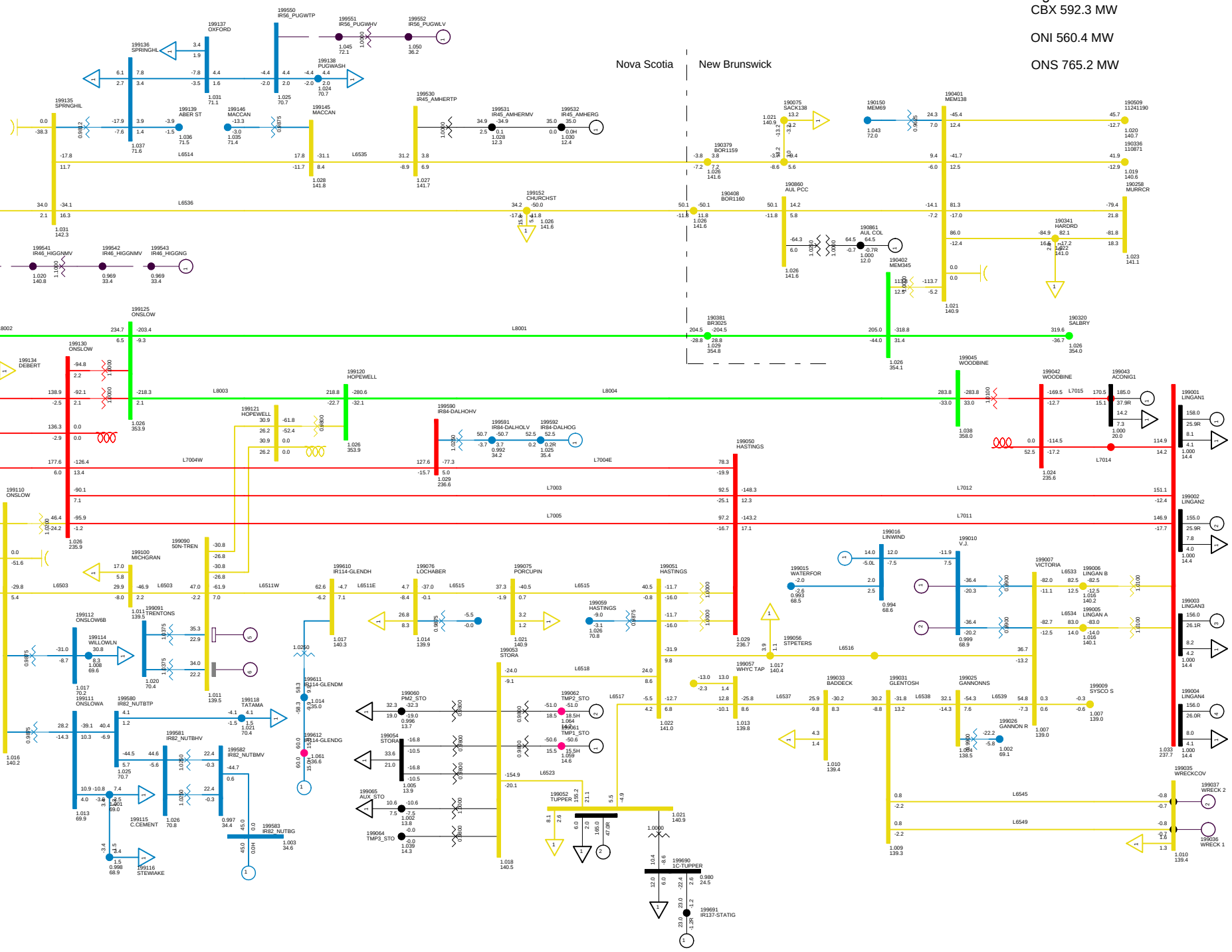

2010 SUMMER PEAK, NSLOAD=1700
NS-NB=-250; NB-NE=1000; CBX=592; ONI=560 ONS=765
NORTHEASTERN NS TUE, DEC 09 2008 22:43

Total Wind Gen: 290.1 MW | Gross Tupper 165.0 MW | Gross Wreck Cove 0.0 MW | Net Stora Load 178.9 MW
Gross Lingan 625.0 MW | Gross Trenton 0.0 MW | Gross Gas Turbine 0.0 MW | Total BMPC Load 108.5 MW
Gross Pt Aconi 185.0 MW | Gross Tuft's Cove 158.6 MW | Gross Small Hydro 42.9 MW

Bus - VOLTAGE (KV/PU)
Branch - MW/MVAR
Equipment - MW/MVAR
110.0%RATEA
1.050OV 0.950UV
KV: <=25.000 <=69.000 <=138.000 <=230.000 <=345.000 >345.000

Figure ___

NSX -410.5 MW
CBX 438.3 MW
ONI 401.6 MW
ONS 766.2 MW

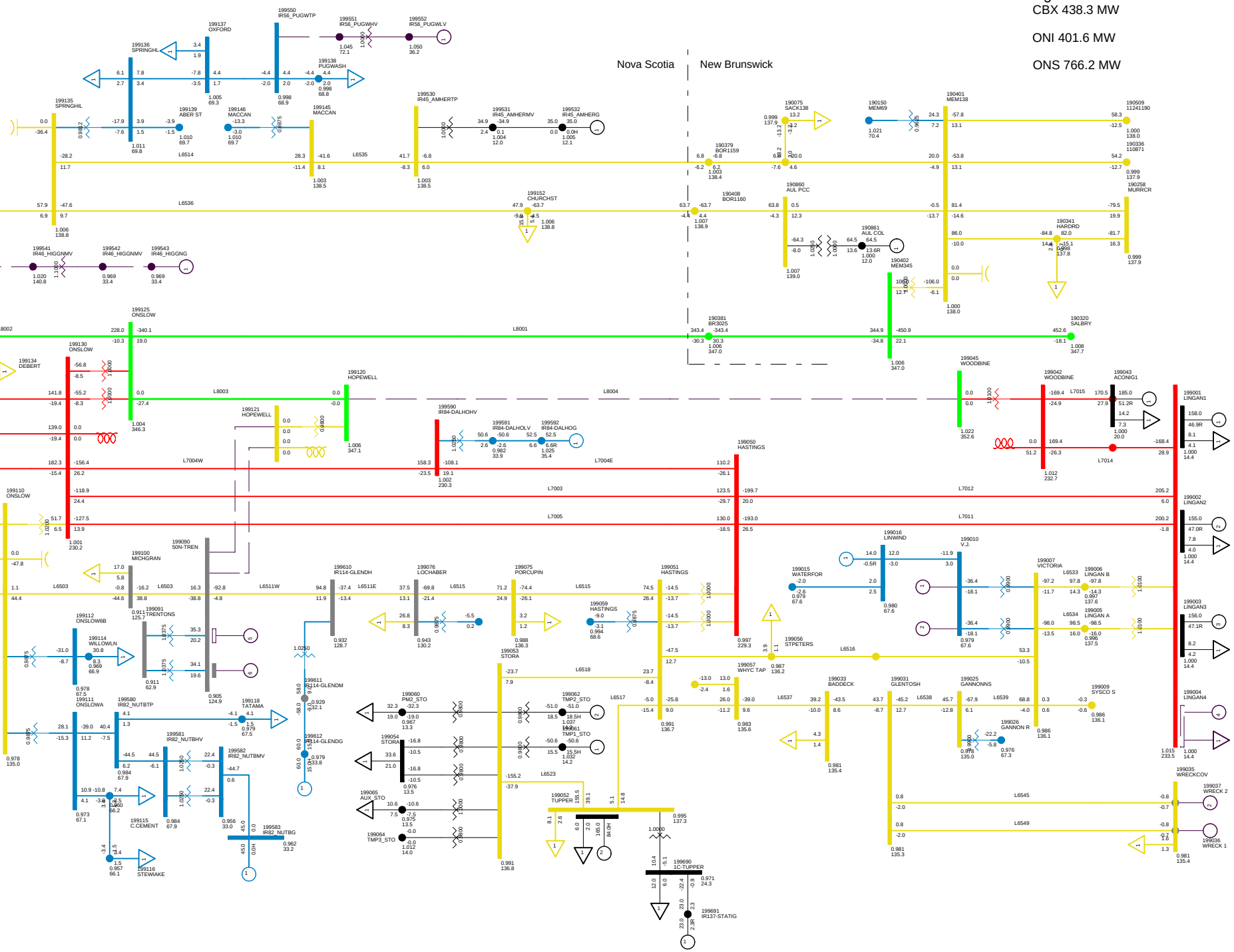

2013 SUMMER PEAK NS IMPORT 250 MW
C50 1P FAULT ON L6507, BBU 79N-606
NORTHEASTERN NS TUE, DEC 09 2008 22:43

Total Wind Gen: 290.1 MW	Gross Tupper 165.0 MW	Gross Wreck Cove 0.0 MW	Net Stora Load 178.9 MW
Gross Lingan 469.0 MW	Gross Trenton 0.0 MW	Gross Gas Turbine 0.0 MW	Total BMPC Load 108.5 MW
Gross Pt Aconi 185.0 MW	Gross Tuft's Cove 158.6 MW	Gross Small Hydro 42.9 MW	

Bus - VOLTAGE (KV/PU)
Branch - MW/MVAR
Equipment - MW/MVAR
110.0%RATEA
1.050OV 0.950UV
KV: <=25.000 <=69.000 <=138.000 <=230.000 <=345.000 >345.000

Figure ___

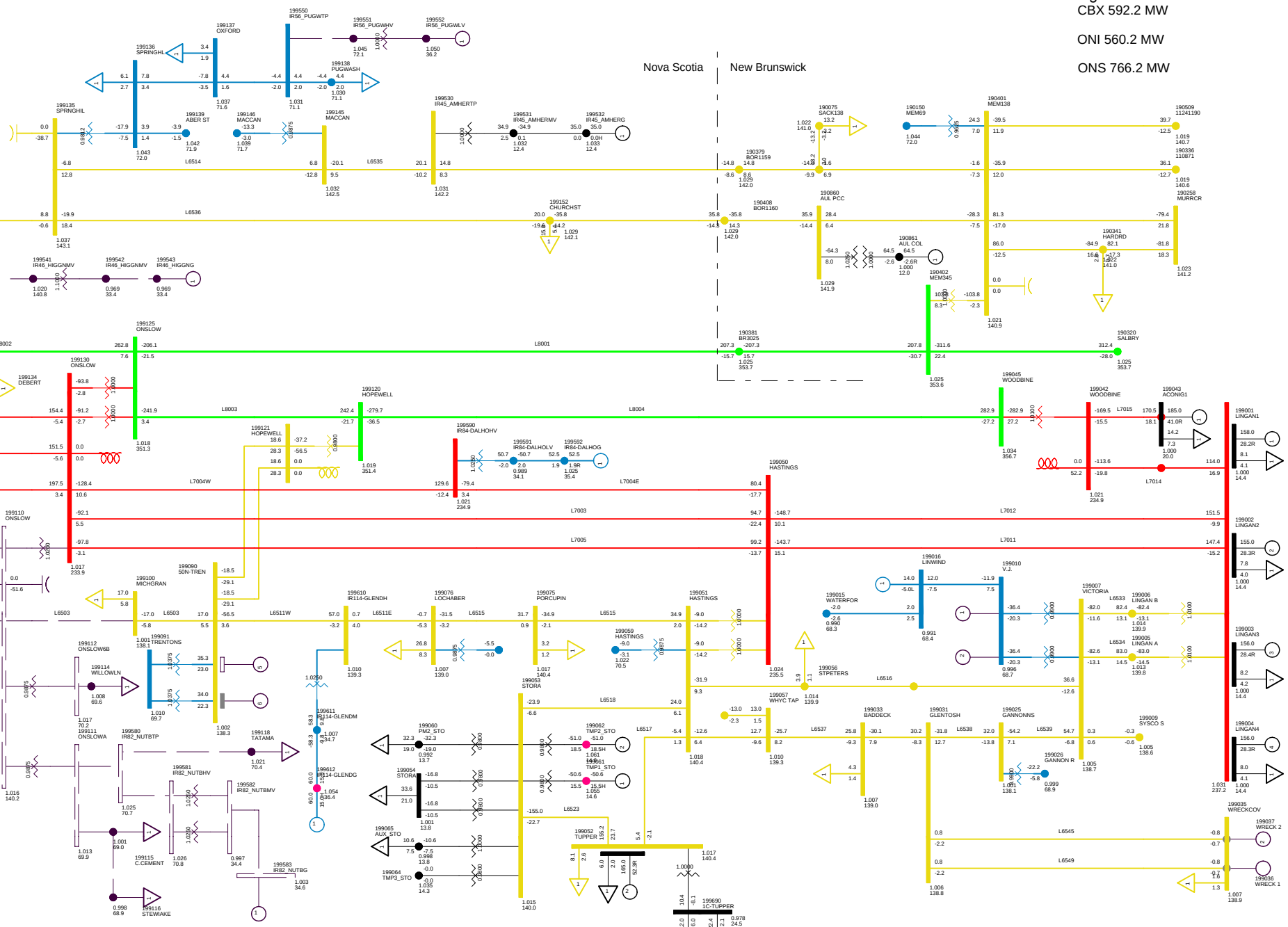

2013 SUMMER PEAK NS IMPORT 250 MW
C51 1P FAULT ON 1N BUS 61
NORTHEASTERN NS TUE, DEC 09 2008 22:43

Total Wind Gen: 245.1 MW | Gross Tupper 165.0 MW | Gross Wreck Cove 0.0 MW | Net Stora Load 178.9 MW
Gross Lingan 625.0 MW | Gross Trenton 0.0 MW | Gross Gas Turbine 0.0 MW | Total BMPC Load 108.5 MW
Gross Pt Aconi 185.0 MW | Gross Tuft's Cove 158.6 MW | Gross Small Hydro 42.9 MW

Bus - VOLTAGE (KV/PU)
Branch - MW/MVAR
Equipment - MW/MVAR
110.0%RATEA
1.0500V 0.950UV
KV: <=25.000 <=69.000 <=138.000 <=230.000 <=345.000 >345.000

Figure ___

NSX -200.0 MW

CBX 644.1 MW

ONI 609.9 MW

ONS 765.2 MW

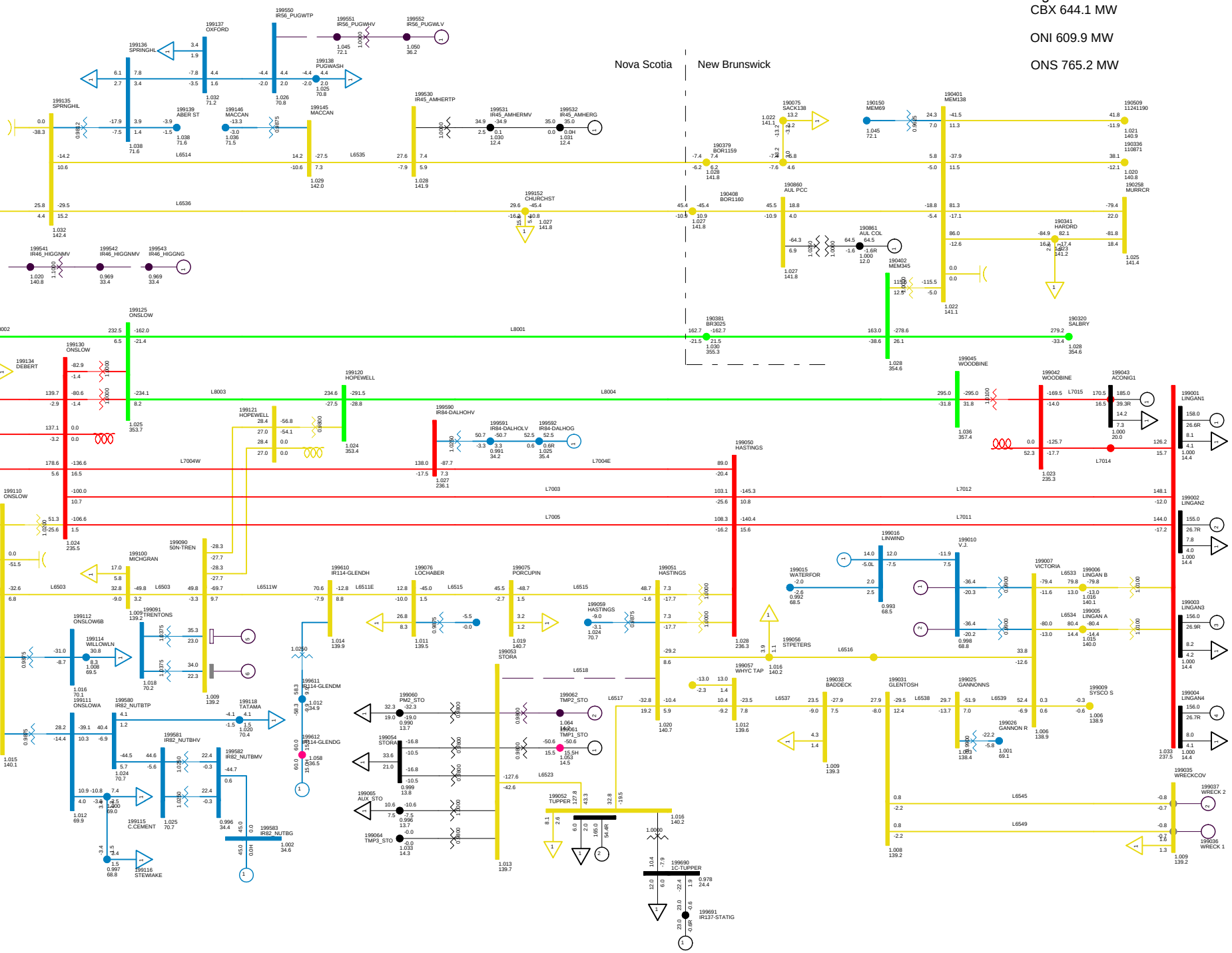

2013 SUMMER PEAK NS IMPORT 250 MW
C52 BBU 47C-601
NORTHEASTERN NS TUE, DEC 09 2008 22:43

Total Wind Gen: 290.1 MW | Gross Tupper 165.0 MW | Gross Wreck Cove 0.0 MW | Net Stora Load 127.6 MW
Gross Lingan 625.0 MW | Gross Trenton 0.0 MW | Gross Gas Turbine 0.0 MW | Total BMPC Load 108.5 MW
Gross Pt Aconi 185.0 MW | Gross Tuft's Cove 158.6 MW | Gross Small Hydro 42.9 MW

Bus - VOLTAGE (KV/PU)
Branch - MW/MVAR
Equipment - MW/MVAR
110.0%RATEA
1.050OV 0.950UV
KV: <=25.000 <=69.000 <=138.000 <=230.000 <=345.000 >345.000

Figure ___

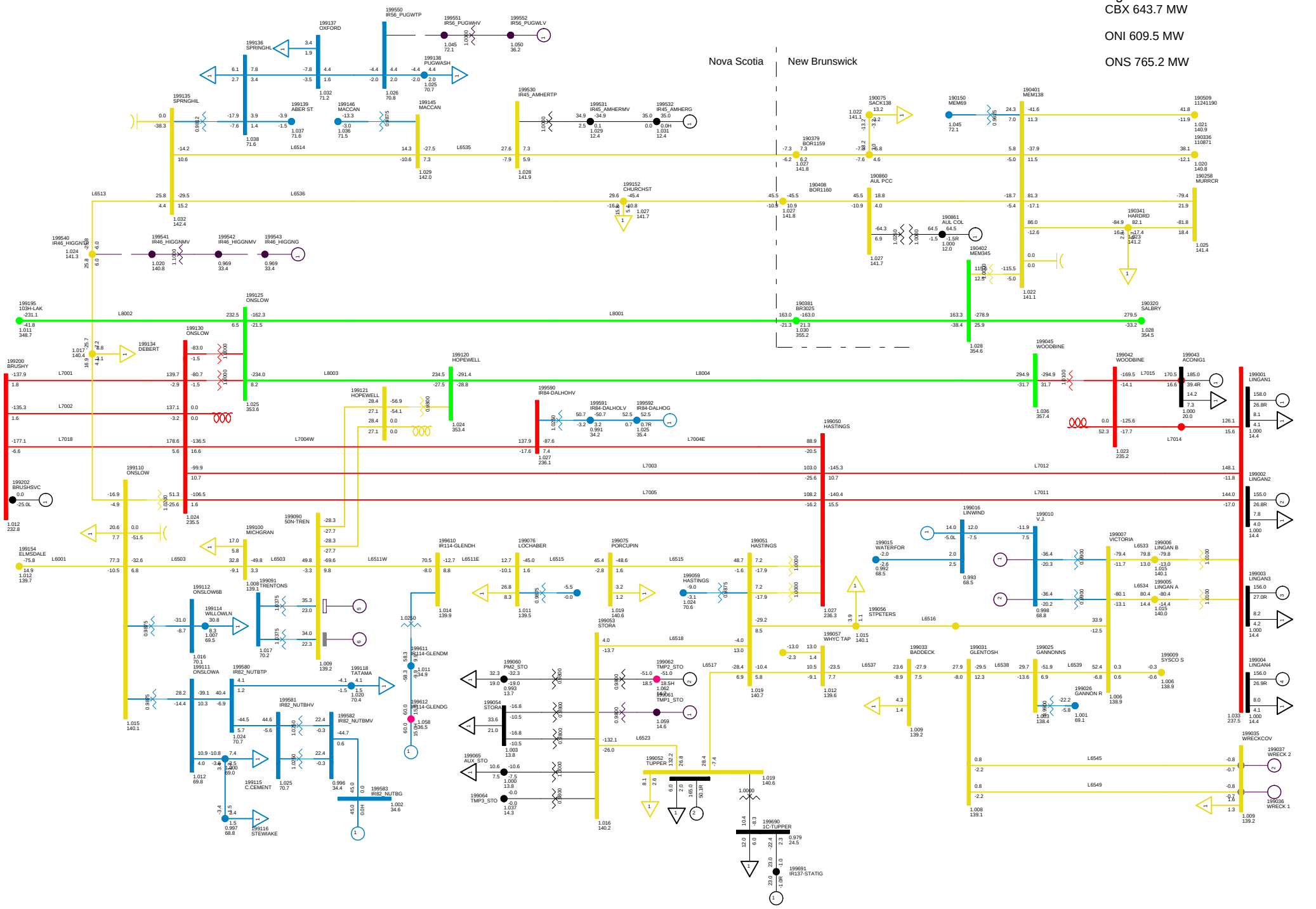

2013 SUMMER PEAK NS IMPORT 250 MW
C53 BREAKR 47C-602 FAULT
NORTHEASTERN NS TUE, DEC 09 2008 22:43

Total Wind Gen: 290.1 MW | Gross Tupper 165.0 MW | Gross Wreck Cove 0.0 MW | Net Stora Load 128.0 MW
Gross Lingan 625.0 MW | Gross Trenton 0.0 MW | Gross Gas Turbine 0.0 MW | Total BMPC Load 108.5 MW
Gross Pt Aconi 185.0 MW | Gross Tuft's Cove 158.6 MW | Gross Small Hydro 42.9 MW

Bus - VOLTAGE (KV/PU)
Branch - MW/MVAR
Equipment - MW/MVAR
110.0%RATEA
1.050OV 0.950UV
KV: <=25.000 <=69.000 <=138.000 <=230.000 <=345.000 >345.000

Figure ___

NSX -249.7 MW
CBX 592.3 MW
ONI 560.4 MW
ONS 765.2 MW

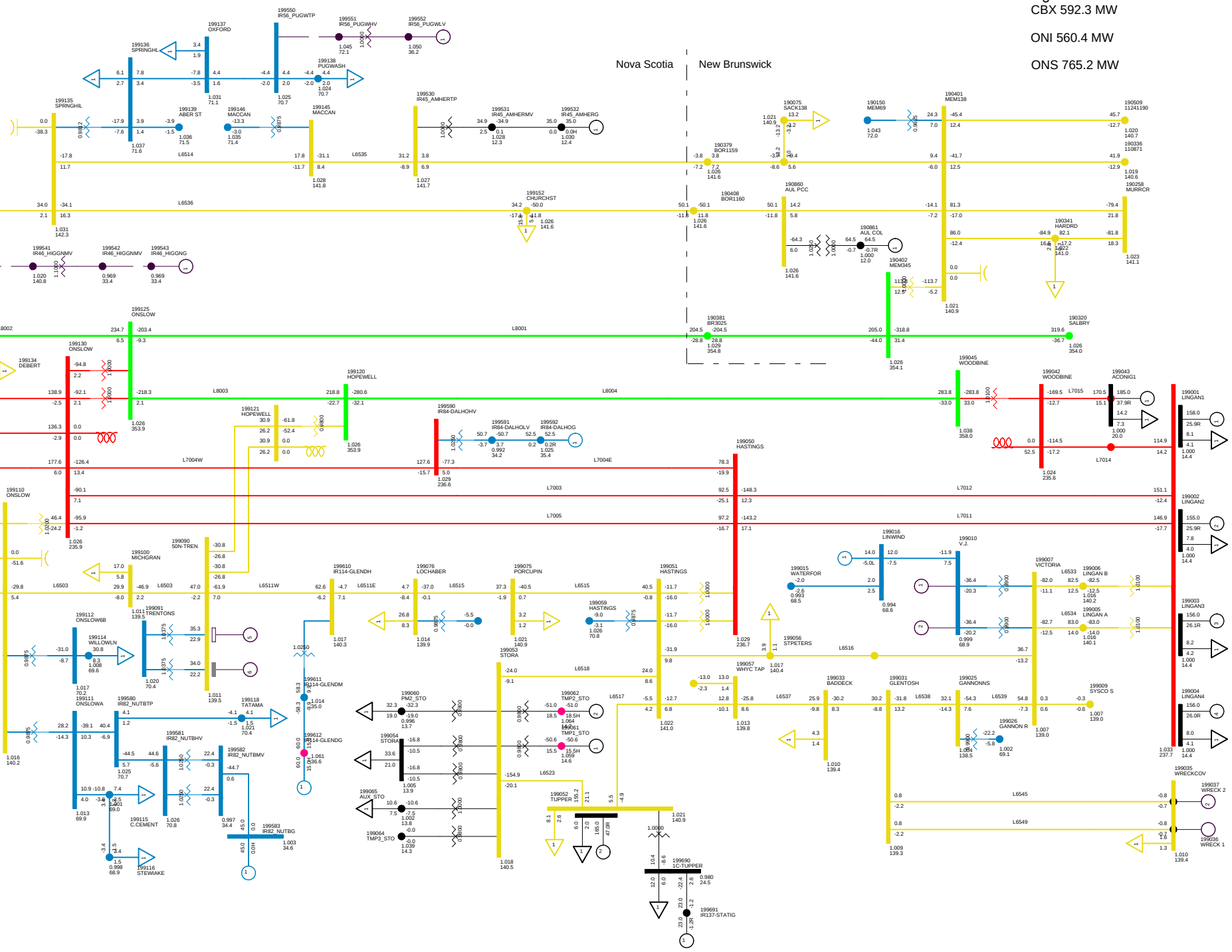

2010 SUMMER PEAK, NSLOAD=1700
NS-NB=-250; NB-NE=1000; CBX=592; ONI=560 ONS=765
NORTHEASTERN NS TUE, DEC 09 2008 22:43

Total Wind Gen: 290.1 MW | Gross Tupper 165.0 MW | Gross Wreck Cove 0.0 MW | Net Stora Load 178.9 MW
Gross Lingan 625.0 MW | Gross Trenton 0.0 MW | Gross Gas Turbine 0.0 MW | Total BMPC Load 108.5 MW
Gross Pt Aconi 185.0 MW | Gross Tuft's Cove 158.6 MW | Gross Small Hydro 42.9 MW

Bus - VOLTAGE (KV/PU)
Branch - MW/MVAR
Equipment - MW/MVAR
110.0%RATEA
1.050OV 0.950UV
KV: <=25.000 <=69.000 <=138.000 <=230.000 <=345.000 >345.000

Figure ___

NSX -396.7 MW

CBX 442.8 MW

ONI 414.5 MW

ONS 765.4 MW

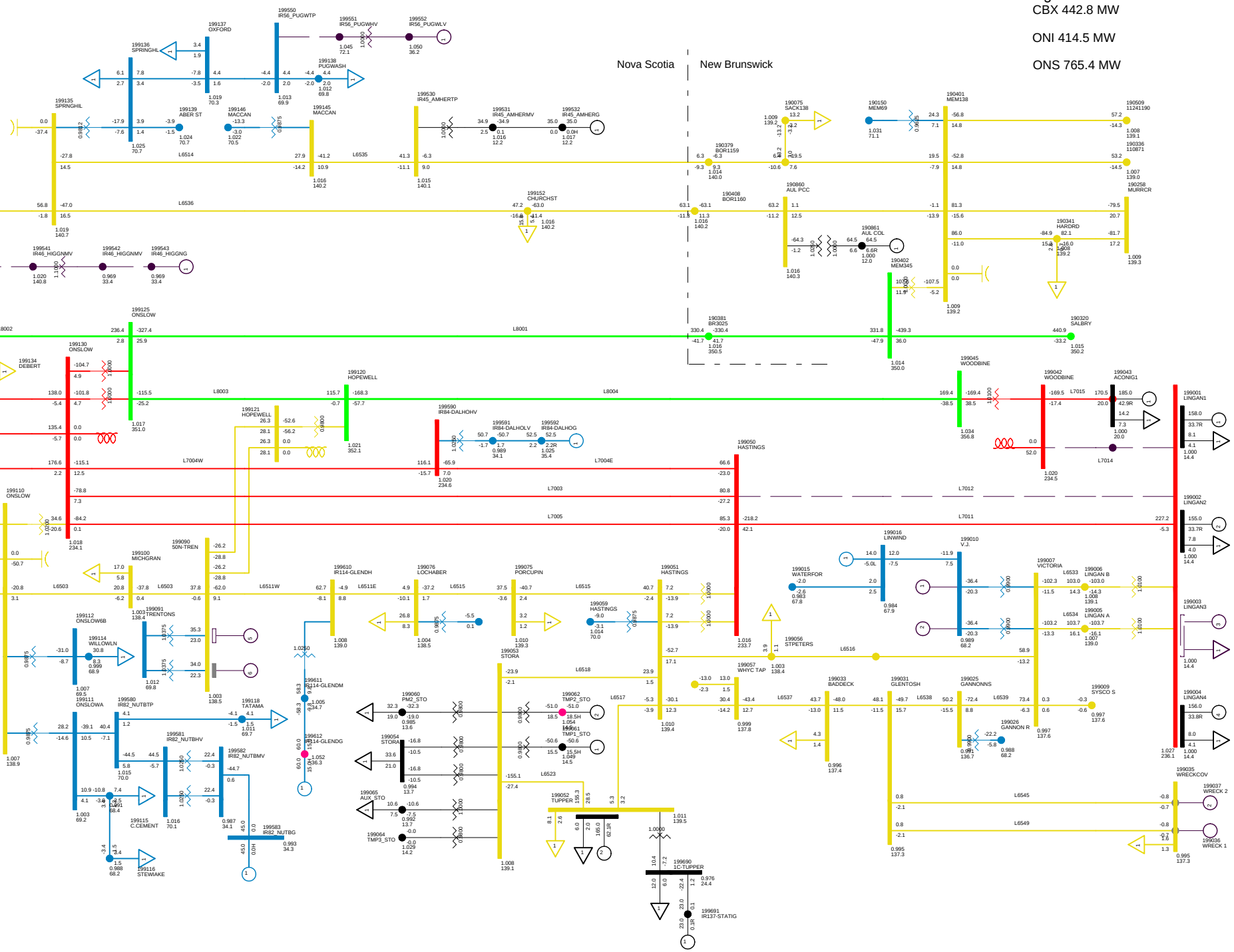

2013 SUMMER PEAK NS IMPORT 250 MW
C54S BBU 88S-723 WITH SPS
NORTHEASTERN NS TUE, DEC 09 2008 22:44

Total Wind Gen: 290.1 MW	Gross Tupper 165.0 MW	Gross Wreck Cove 0.0 MW	Net Stora Load 178.9 MW
Gross Lingan 469.0 MW	Gross Trenton 0.0 MW	Gross Gas Turbine 0.0 MW	Total BMPC Load 108.5 MW
Gross Pt Aconi 185.0 MW	Gross Tuft's Cove 158.6 MW	Gross Small Hydro 42.9 MW	

Bus - VOLTAGE (KV/PU)
Branch - MW/MVAR
Equipment - MW/MVAR
110.0%RATEA
1.0500V 0.950UV
KV: <=25.000 <=69.000 <=138.000 <=230.000 <=345.000 >345.000

Figure ___

NSX -257.2 MW

CBX 593.0 MW

ONI 557.3 MW

ONS 769.5 MW

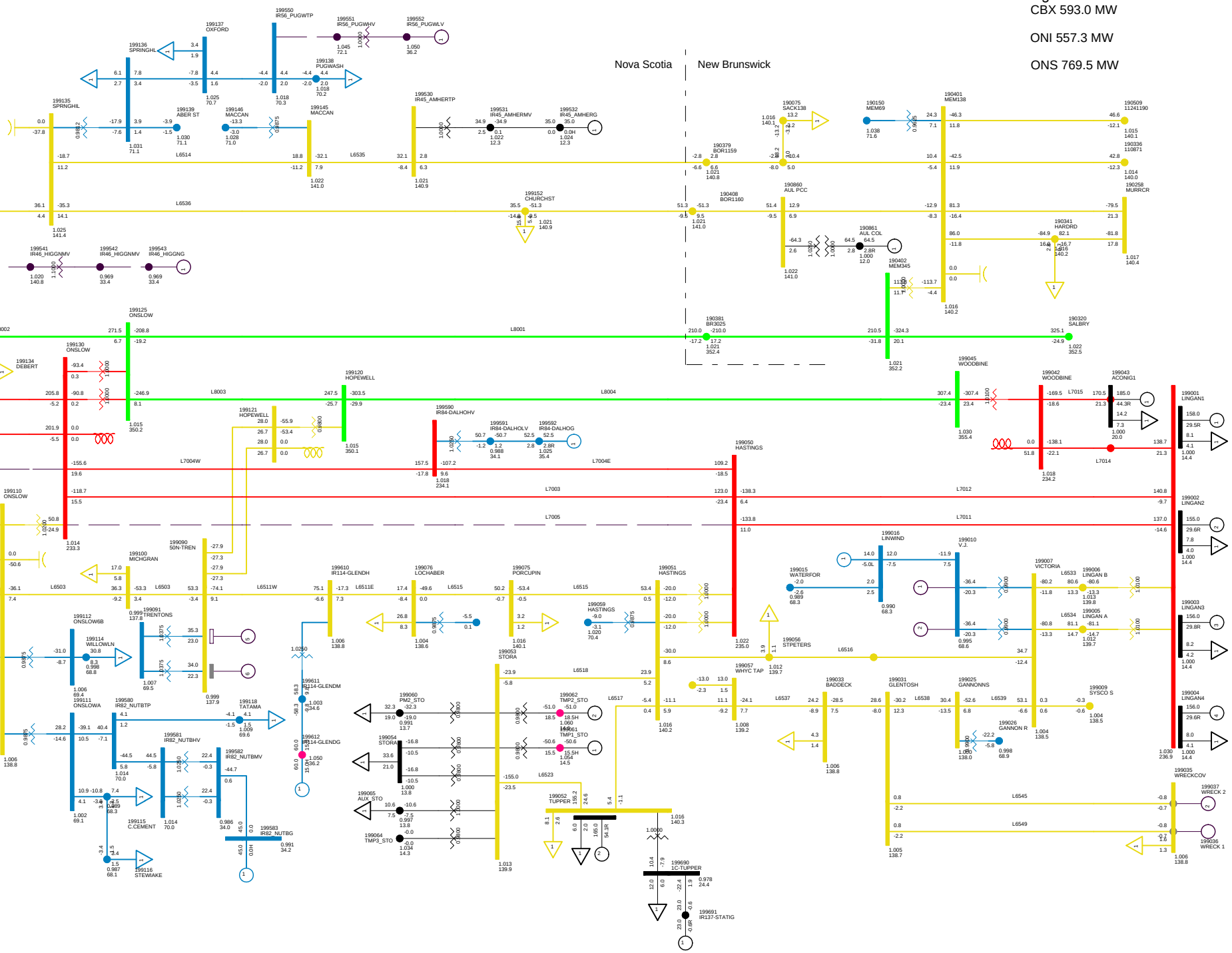

2013 SUMMER PEAK NS IMPORT 250 MW
C55 BBU 67N-712
NORTHEASTERN NS TUE, DEC 09 2008 22:44

Total Wind Gen: 290.1 MW | Gross Tupper 165.0 MW | Gross Wreck Cove 0.0 MW | Net Stora Load 178.9 MW
Gross Lingan 625.0 MW | Gross Trenton 0.0 MW | Gross Gas Turbine 0.0 MW | Total BMPC Load 108.5 MW
Gross Pt Aconi 185.0 MW | Gross Tuft's Cove 158.6 MW | Gross Small Hydro 42.9 MW

Bus - VOLTAGE (KV/PU)
Branch - MW/MVAR
Equipment - MW/MVAR
110.0%RATEA
1.050OV 0.950UV
KV: <=25.000 <=69.000 <=138.000 <=230.000 <=345.000 >345.000

Figure ___

NSX -262.8 MW

CBX 586.9 MW

ONI 548.0 MW

ONS 766.2 MW

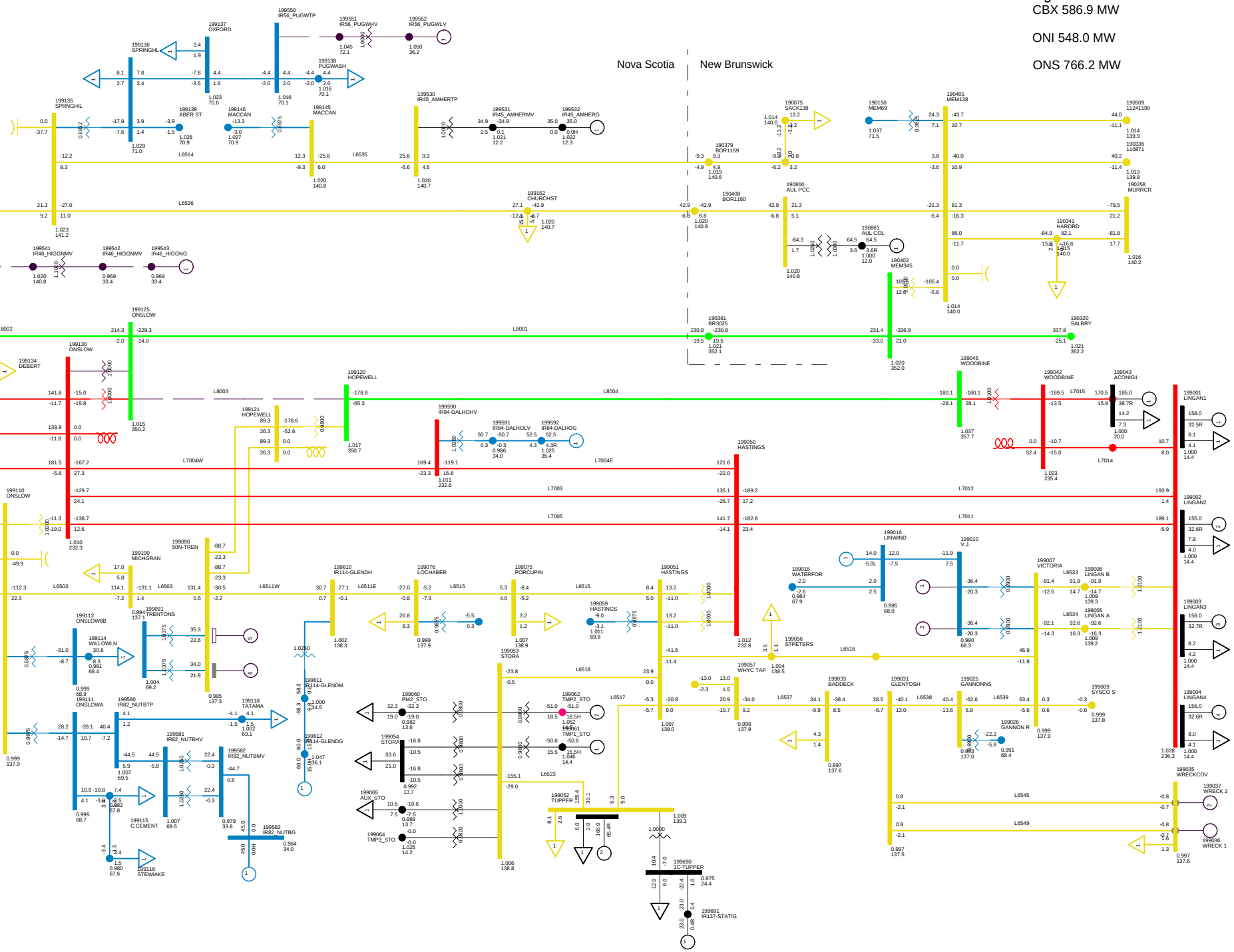

2013 SUMMER PEAK NS IMPORT 250 MW
C56 BBU 67N-811 L8003 + T82 NO SPS
NORTHEASTERN NS TUE, DEC 09 2008 22:44

Total Wind Gen: 290.1 MW	Gross Tupper 165.0 MW	Gross Wreck Cove 0.0 MW	Net Stora Load 178.9 MW
Gross Lingan 625.0 MW	Gross Trenton 0.0 MW	Gross Gas Turbine 0.0 MW	Total BMPC Load 108.5 MW
Gross Pt Aconi 185.0 MW	Gross Tuft's Cove 158.6 MW	Gross Small Hydro 42.9 MW	

Bus - VOLTAGE (KV/PU)
Branch - MW/MVAR
Equipment - MW/MVAR
110.0%RATEA
1.050OV 0.950UV
KV: <=25.000 <=69.000 <=138.000 <=230.000 <=345.000 >345.000

Figure ___

NSX -272.7 MW

CBX 586.8 MW

ONI 547.8 MW

ONS 775.4 MW

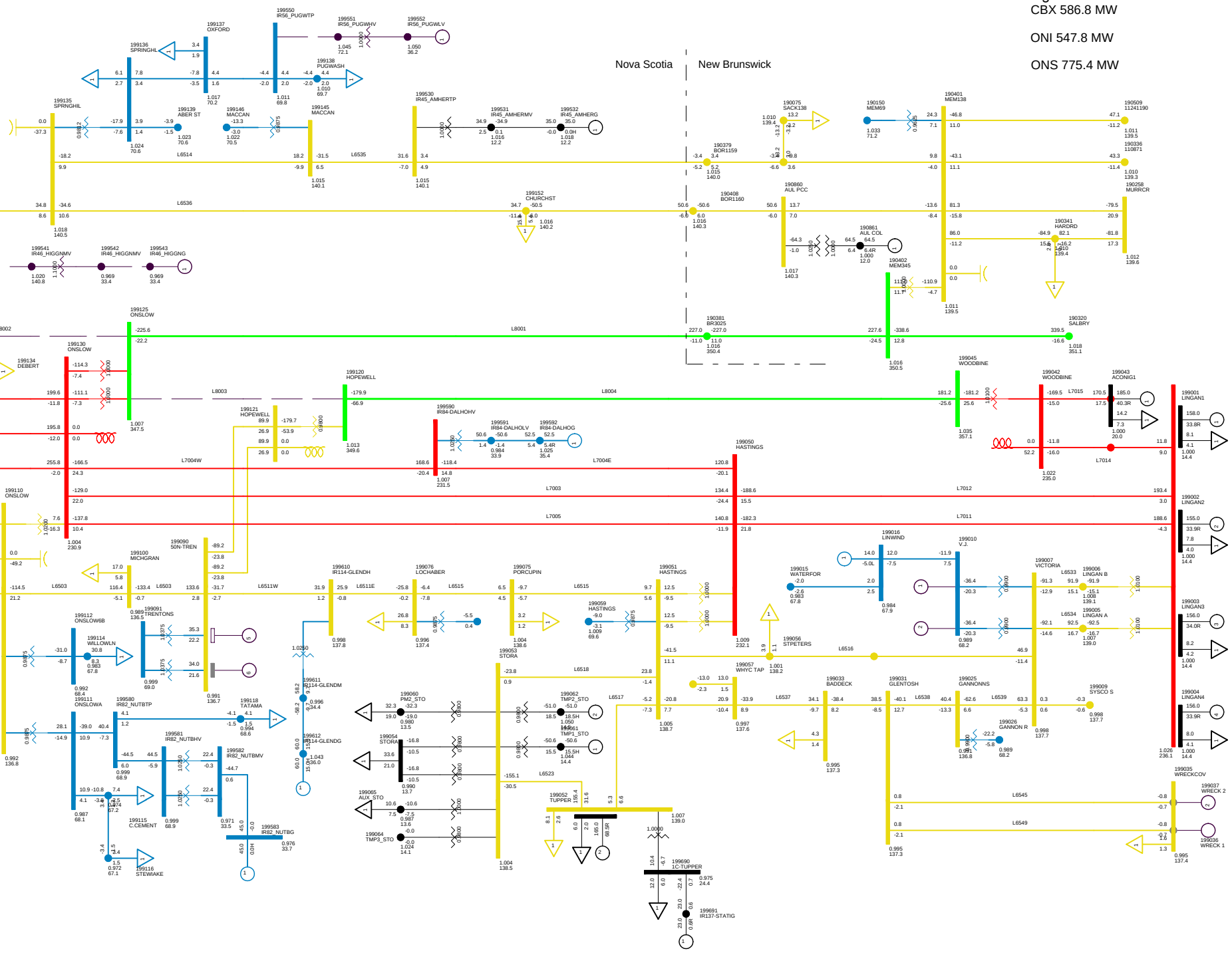

2013 SUMMER PEAK NS IMPORT 250 MW
C57 BBU 67N-812 L8003+L8002 NO SPS
NORTHEASTERN NS TUE, DEC 09 2008 22:44

Total Wind Gen: 290.1 MW | Gross Tupper 165.0 MW | Gross Wreck Cove 0.0 MW | Net Stora Load 178.9 MW
Gross Lingan 625.0 MW | Gross Trenton 0.0 MW | Gross Gas Turbine 0.0 MW | Total BMPC Load 108.5 MW
Gross Pt Aconi 185.0 MW | Gross Tuft's Cove 158.6 MW | Gross Small Hydro 42.9 MW

Bus - VOLTAGE (KV/PU)
Branch - MW/MVAR
Equipment - MW/MVAR
110.0%RATEA
1.050OV 0.950UV
KV: <=25.000 <=69.000 <=138.000 <=230.000 <=345.000 >345.000

Figure ___

NSX -290.9 MW

CBX 569.7 MW

ONI 521.8 MW

ONS 767.4 MW

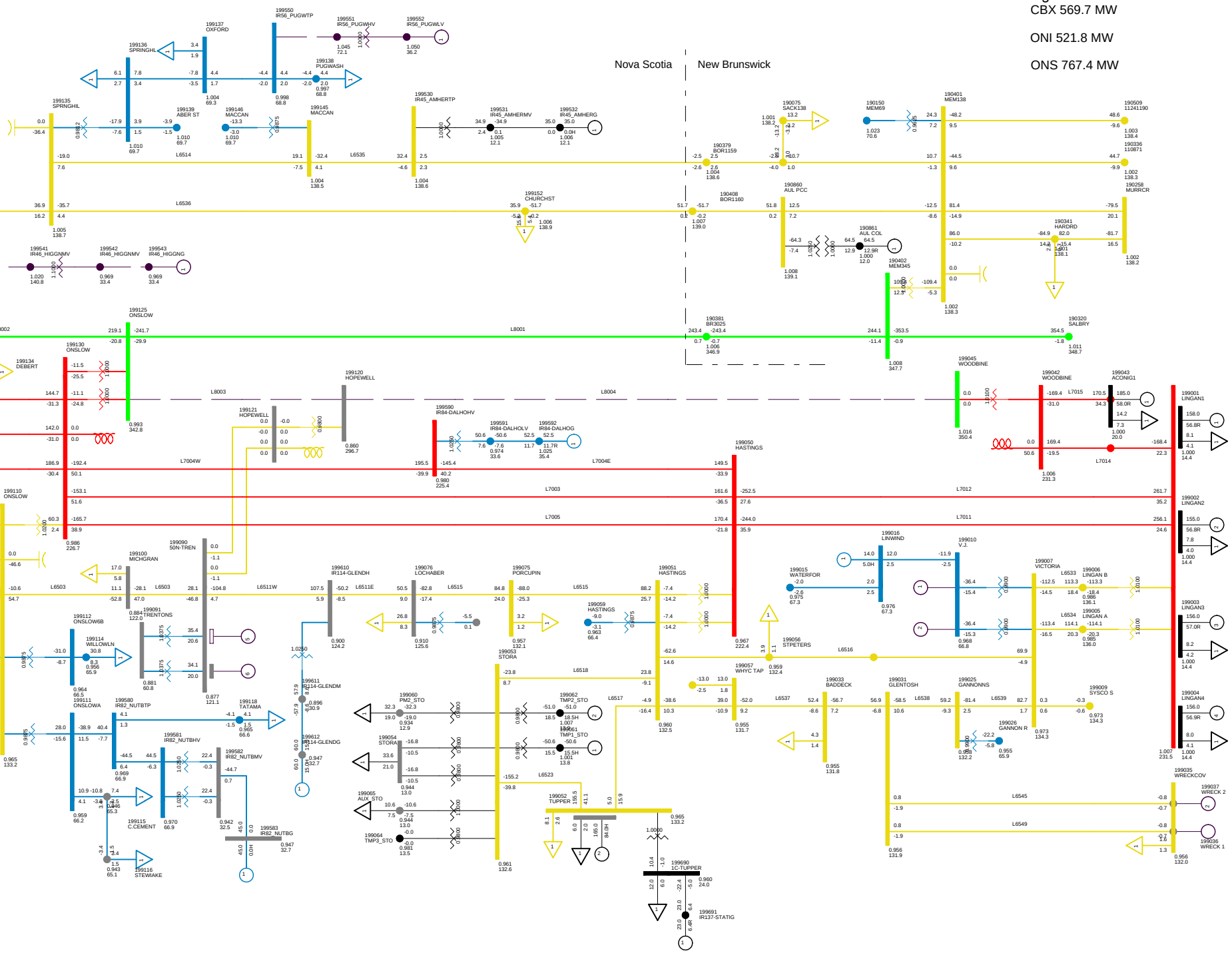

2013 SUMMER PEAK NS IMPORT 250 MW
C58 BBU 79N-810 NO SPS
NORTHEASTERN NS TUE, DEC 09 2008 22:45

Total Wind Gen: 290.1 MW | Gross Tupper 165.0 MW | Gross Wreck Cove 0.0 MW | Net Stora Load 179.0 MW
Gross Lingan 625.0 MW | Gross Trenton 0.0 MW | Gross Gas Turbine 0.0 MW | Total BMPC Load 108.5 MW
Gross Pt Aconi 185.0 MW | Gross Tuft's Cove 158.6 MW | Gross Small Hydro 42.9 MW

Bus - VOLTAGE (KV/PU)
Branch - MW/MVAR
Equipment - MW/MVAR
110.0%RATEA
1.050UV 0.950UV
KV: <=25.000 <=69.000 <=138.000 <=230.000 <=345.000 >345.000

Figure ___

NSX -526.5 MW

CBX 310.3 MW

ONI 285.9 MW

ONS 765.4 MW

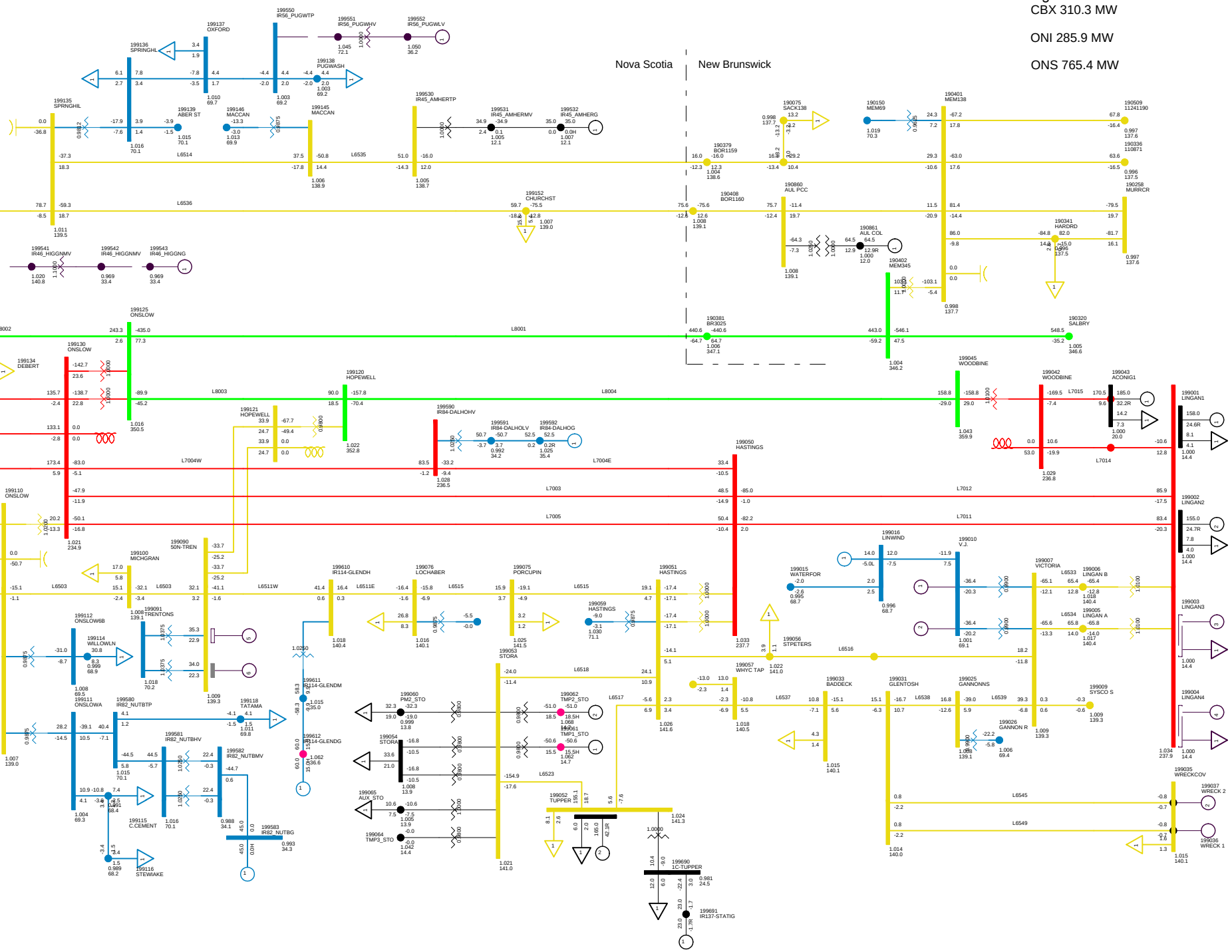

2013 SUMMER PEAK NS IMPORT 250 MW
C59 BBU 88S-721 TRIP LINGAN 3 AND 4
NORTHEASTERN NS TUE, DEC 09 2008 22:45

Total Wind Gen: 290.1 MW | Gross Tupper 165.0 MW | Gross Wreck Cove 0.0 MW | Net Stora Load 178.9 MW
Gross Lingan 313.0 MW | Gross Trenton 0.0 MW | Gross Gas Turbine 0.0 MW | Total BMPC Load 108.5 MW
Gross Pt Aconi 185.0 MW | Gross Tuft's Cove 158.6 MW | Gross Small Hydro 42.9 MW

Bus - VOLTAGE (KV/PU)
Branch - MW/MVAR
Equipment - MW/MVAR
110.0%RATEA
1.0500V 0.950UV
KV: <=25.000 <=69.000 <=138.000 <=230.000 <=345.000 >345.000

Figure ___

NSX -251.8 MW

CBX 593.8 MW

ONI 558.7 MW

ONS 765.4 MW

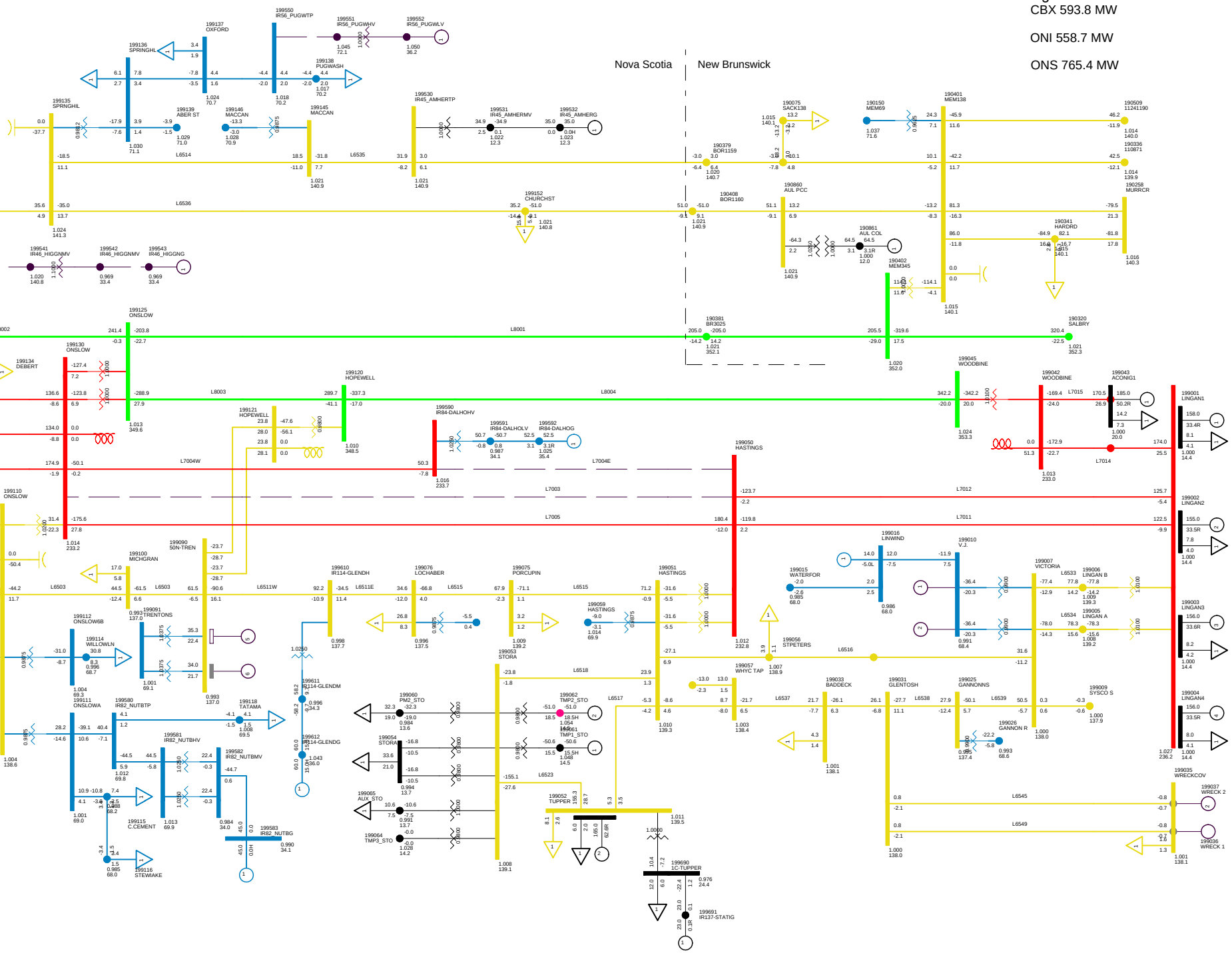

2013 SUMMER PEAK NS IMPORT 250 MW
C60 DCT ON L7003+L7004
NORTHEASTERN NS TUE, DEC 09 2008 22:45

Total Wind Gen: 290.1 MW | Gross Tupper 165.0 MW | Gross Wreck Cove 0.0 MW | Net Stora Load 178.9 MW
Gross Lingan 625.0 MW | Gross Trenton 0.0 MW | Gross Gas Turbine 0.0 MW | Total BMPC Load 108.5 MW
Gross Pt Aconi 185.0 MW | Gross Tuft's Cove 158.6 MW | Gross Small Hydro 42.9 MW

Bus - VOLTAGE (KV/PU)
Branch - MW/MVAR
Equipment - MW/MVAR
110.0%RATEA
1.050OV 0.950UV
KV: <=25.000 <=69.000 <=138.000 <=230.000 <=345.000 >345.000

Figure ___

NSX 309.7 MW

CBX 567.9 MW

ONI 504.1 MW

ONS 768.3 MW

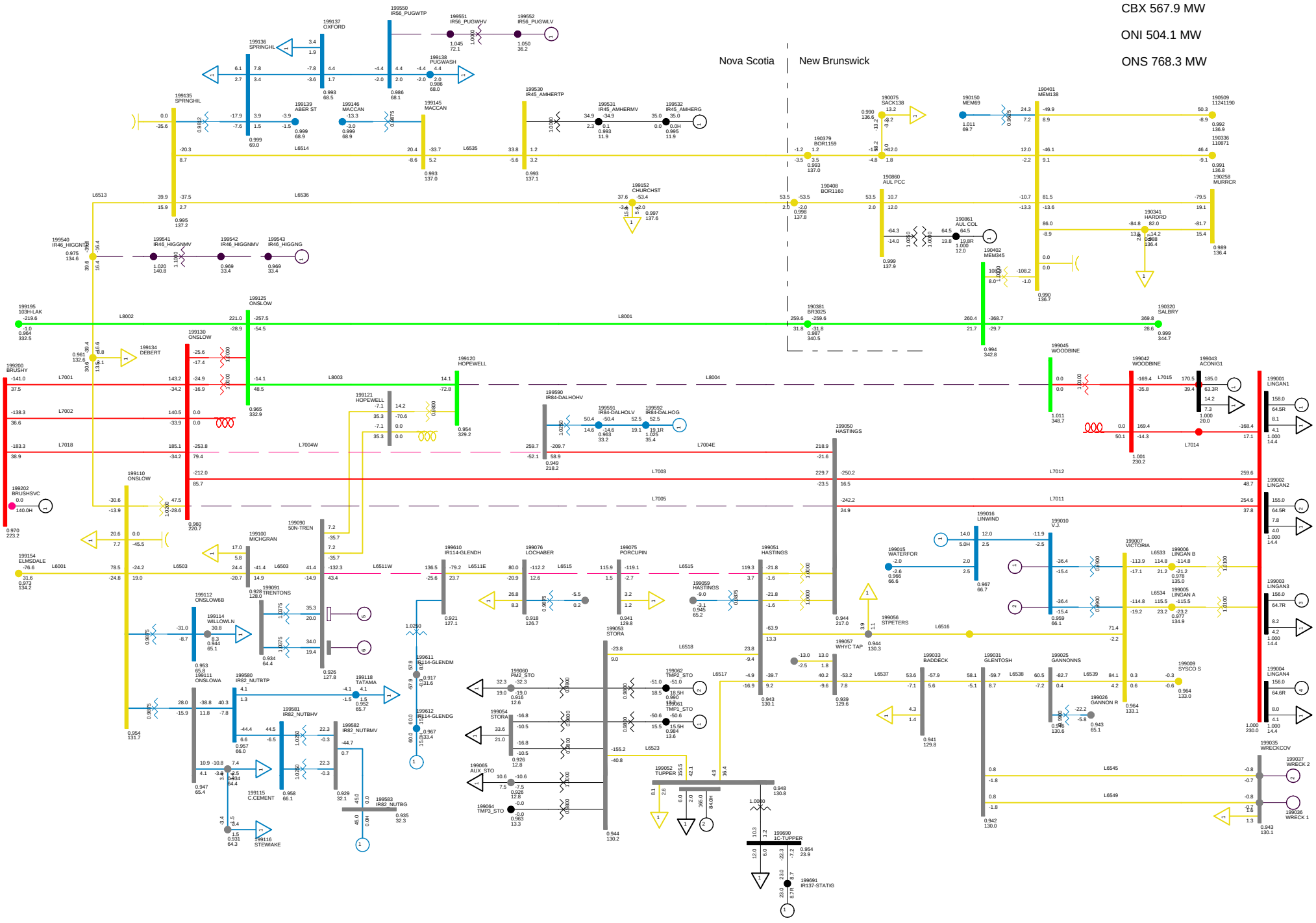

2013 SUMMER PEAK NS IMPORT 250 MW
C61 DCT ON STRAIT CROSSING LOSE L8004-L7005 NO SPS
NORTHEASTERN NS TUE, DEC 09 2008 22:46

Total Wind Gen: 290.1 MW | Gross Tupper 165.0 MW | Gross Wreck Cove 0.0 MW | Net Stora Load 179.0 MW
Gross Lingan 625.0 MW | Gross Trenton 0.0 MW | Gross Gas Turbine 0.0 MW | Total BMPC Load 108.4 MW
Gross Pt Aconi 185.0 MW | Gross Tuft's Cove 158.6 MW | Gross Small Hydro 42.9 MW

Bus - VOLTAGE (KV/PU)
Branch - MW/MVAR
Equipment - MW/MVAR
110.0%RATEA
1.050OV 0.950UV
KV: <=25.000 <=69.000 <=138.000 <=230.000 <=345.000 >345.000

Figure ___

NSX -526.5 MW

CBX 310.3 MW

ONI 285.9 MW

ONS 765.4 MW

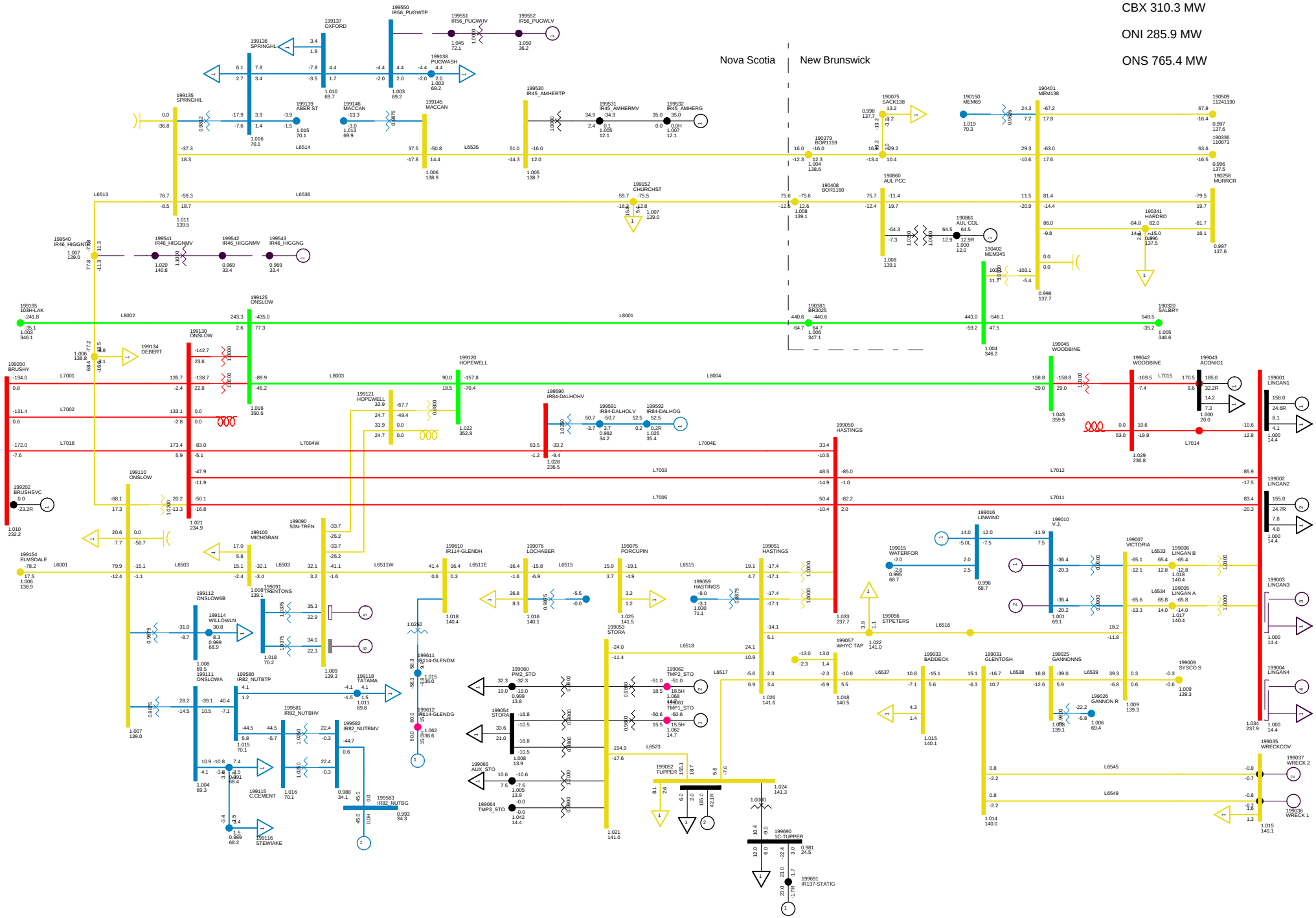

2013 SUMMER PEAK NS IMPORT 250 MW
C62 FAULT ON BREAKER 88S-721 TRIPS LINGAN 3 AND 4
NORTHEASTERN NS TUE, DEC 09 2008 22:46

Total Wind Gen: 290.1 MW	Gross Tupper 165.0 MW	Gross Wreck Cove 0.0 MW	Net Stora Load 178.9 MW
Gross Lingan 313.0 MW	Gross Trenton 0.0 MW	Gross Gas Turbine 0.0 MW	Total BMPC Load 108.5 MW
Gross Pt Aconi 185.0 MW	Gross Tuft's Cove 158.6 MW	Gross Small Hydro 42.9 MW	

Bus - VOLTAGE (KV/PU)
Branch - MW/MVAR
Equipment - MW/MVAR
110.0%RATEA
1.050OV 0.950UV
KV: <=25.000 <=69.000 <=138.000 <=230.000 <=345.000 >345.000

Figure ___

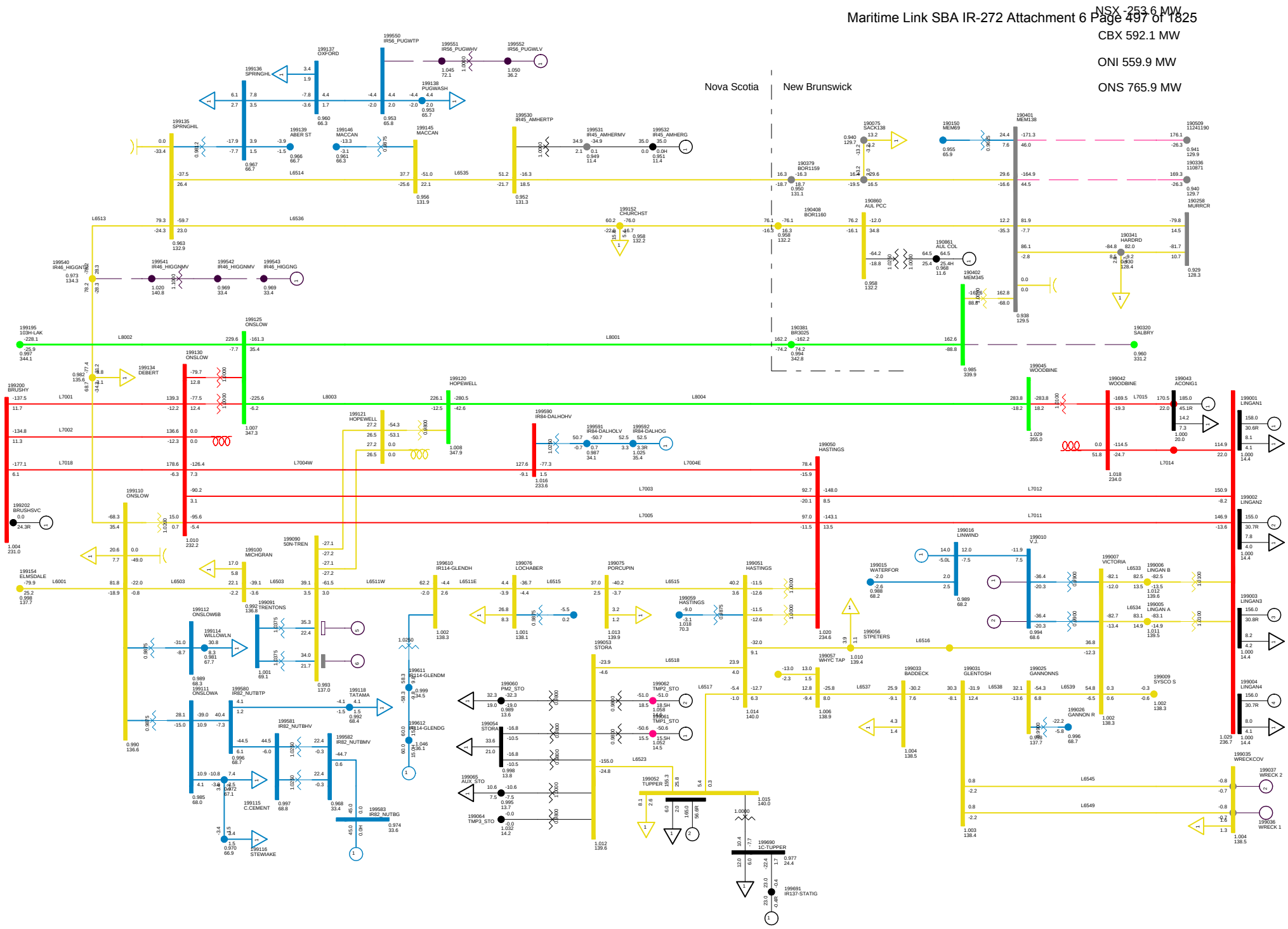

2013 SUMMER PEAK NS IMPORT 250 MW
C63 FAULT ON SALISBURY SA3-2 TRIPS L3006 AND L3017
NORTHEASTERN NS TUE, DEC 09 2008 22:46

Total Wind Gen: 290.1 MW | Gross Tupper 165.0 MW | Gross Wreck Cove 0.0 MW | Net Stora Load 178.9 MW
Gross Lingan 625.0 MW | Gross Trenton 0.0 MW | Gross Gas Turbine 0.0 MW | Total BMPC Load 108.5 MW
Gross Pt Aconi 185.0 MW | Gross Tuft's Cove 158.6 MW | Gross Small Hydro 42.9 MW

Bus - VOLTAGE (KV/PU)
Branch - MW/MVAR
Equipment - MW/MVAR
110.0%RATEA
1.050OV 0.950UV
KV: <=25.000 <=69.000 <=138.000 <=230.000 <=345.000 >345.000

Figure ___

NSX -250.1 MW

CBX 592.3 MW

ONI 560.2 MW

ONS 765.3 MW

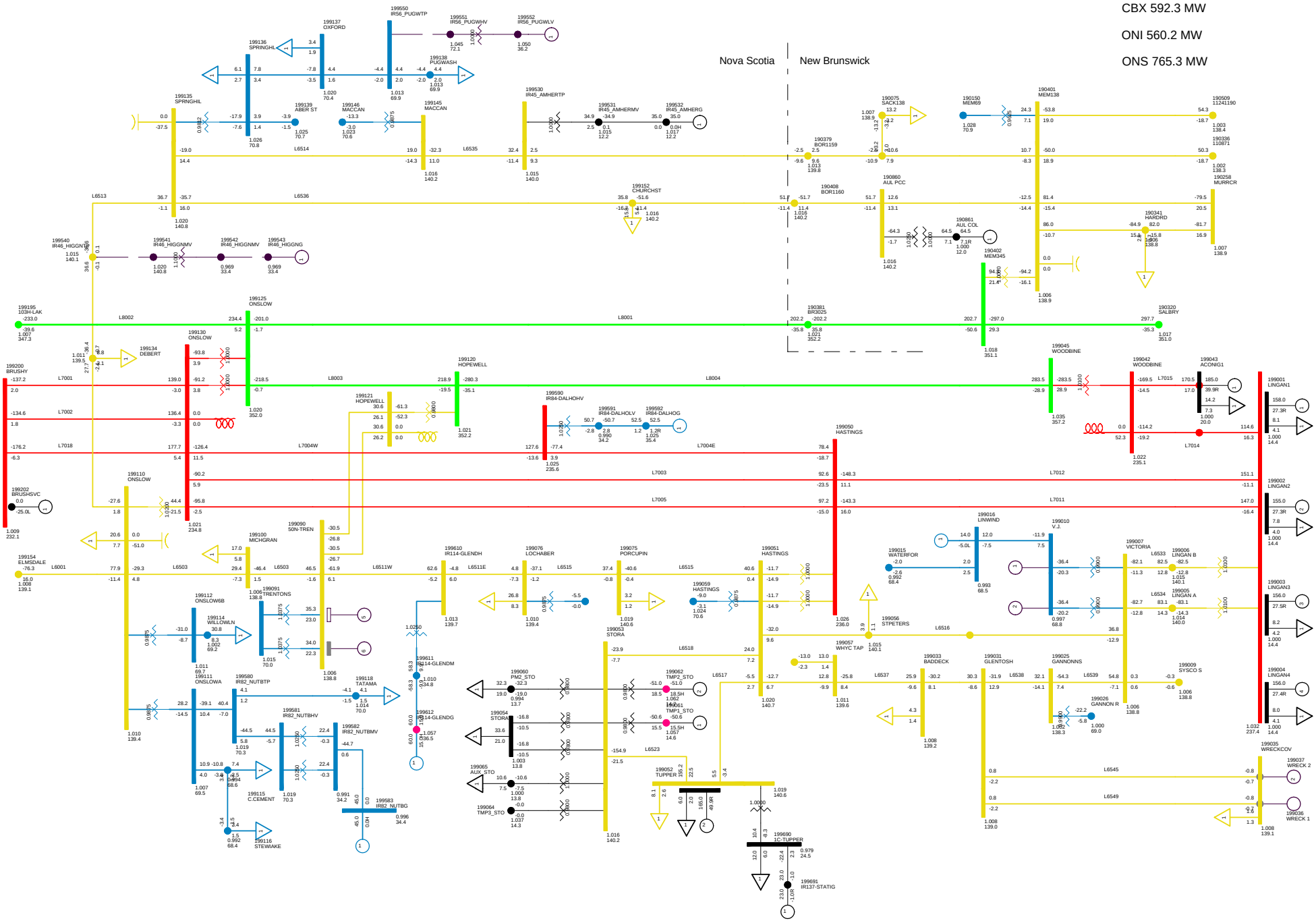

2013 SUMMER PEAK NS IMPORT 250 MW
C64 FAULT ON BREAKER SALISBURY BREAKER SA3-4 TRIPS L3013 AND
NORTHEASTERN NS TUE, DEC 09 2008 22:46

Total Wind Gen: 290.1 MW
Gross Lingan 625.0 MW
Gross Pt Aconi 185.0 MW

Gross Tupper 165.0 MW
Gross Trenton 0.0 MW
Gross Tuft's Cove 158.6 MW

Gross Wreck Cove 0.0 MW
Gross Gas Turbine 0.0 MW
Gross Small Hydro 42.9 MW

Net Stora Load 178.9 MW
Total BMPC Load 108.5 MW

Bus - VOLTAGE (KV/PU)
Branch - MW/MVAR
Equipment - MW/MVAR
110.0%RATEA
1.050OV 0.950UV
KV: <=25.000 <=69.000 <=138.000 <=230.000 <=345.000 >345.000

Figure ___

NSX 0.0 MW
CBX 589.6 MW
ONI 852.1 MW
ONS 802.8 MW

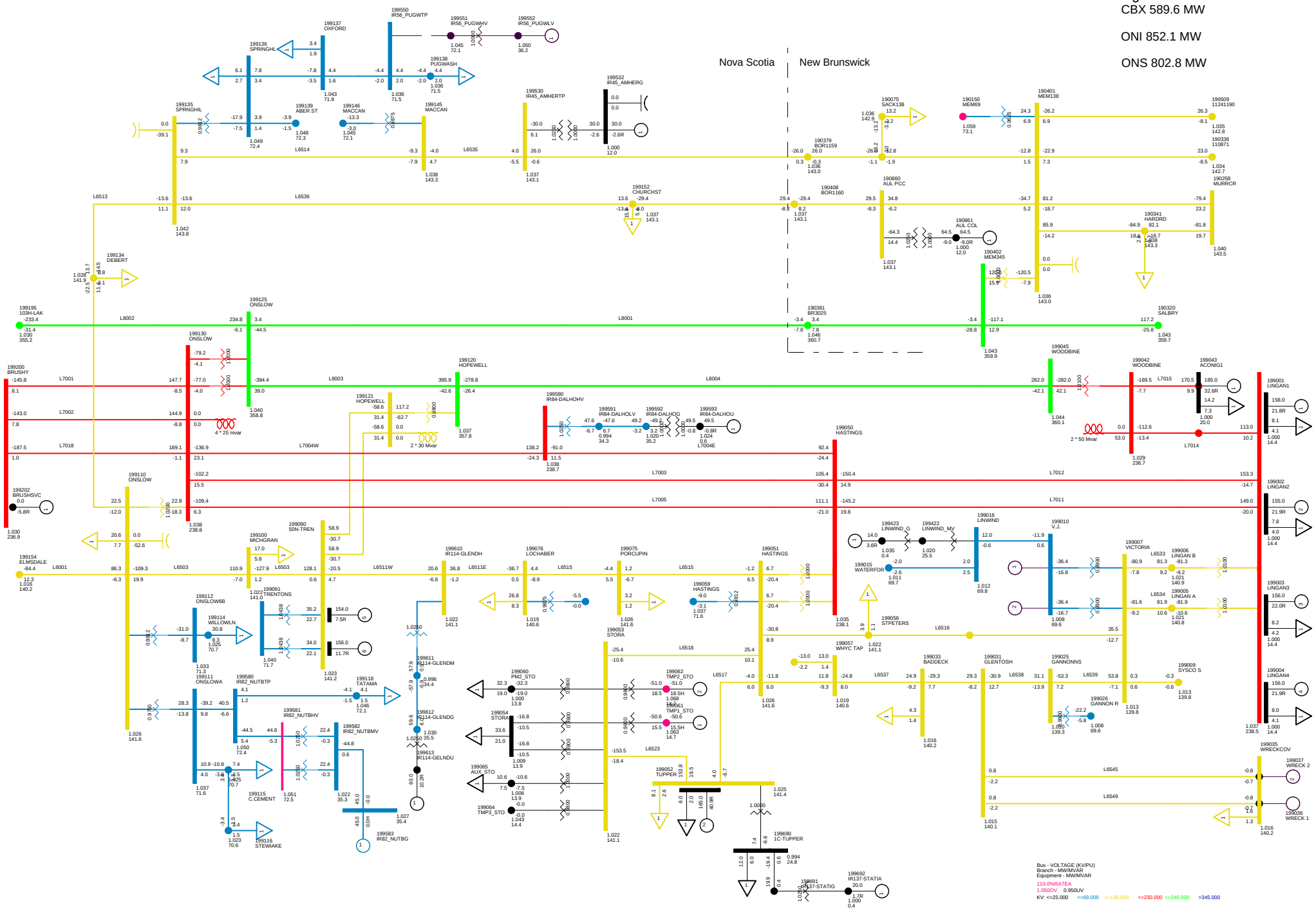

2010 SUMMER PEAK, NSLOAD=1700
NS-NB=0 NB-NE=1000; CBX=589; ONI=852 ONS=803
NORTHEASTERN NS SUN, FEB 08 2009 8:23

Total Wind Gen: 105.0 MW
Gross Lingan 625.0 MW
Gross Pt Aconi 185.0 MW

Gross Tupper 165.0 MW
Gross Trenton 310.0 MW
Gross Tuft's Cove 153.2 MW

Gross Wreck Cove 0.0 MW
Gross Gas Turbine 0.0 MW
Gross Small Hydro 42.9 MW

Net Stora Load 178.9 MW
Total BMPC Load 108.5 MW

Figure ___

NSX -34.5 MW

CBX 568.5 MW

ONI 818.9 MW

ONS 804.0 MW

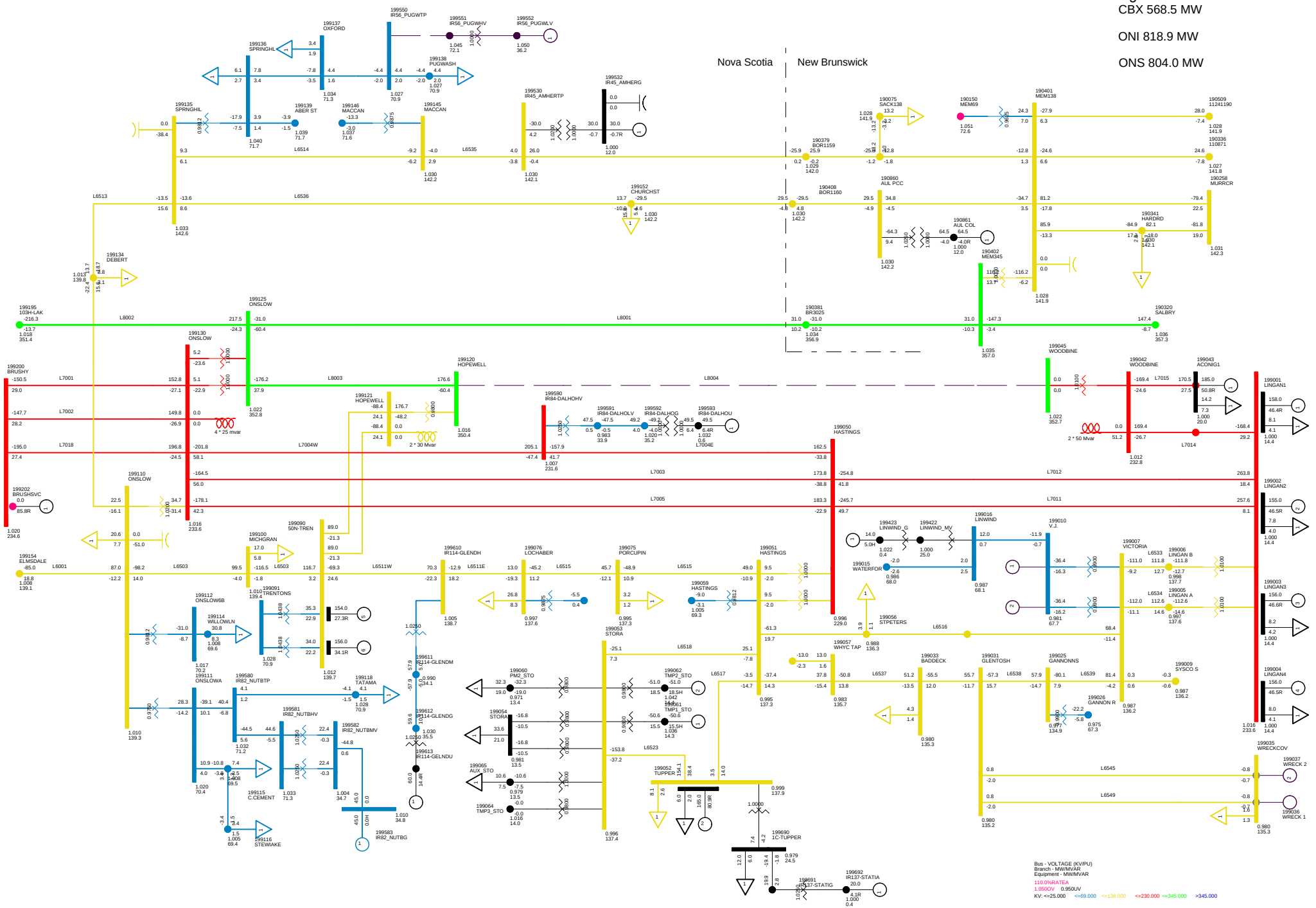

SUMMER PEAK NS-NB = 0
C01 LOSE L8004 NO SPS
NORTHEASTERN NS SUN, FEB 08 2009 8:23

Total Wind Gen: 105.0 MW
Gross Lingan 625.0 MW
Gross Pt Aconi 185.0 MW

Gross Tupper 165.0 MW
Gross Trenton 310.0 MW
Gross Tuft's Cove 153.2 MW

Gross Wreck Cove 0.0 MW
Gross Gas Turbine 0.0 MW
Gross Small Hydro 42.9 MW

Net Stora Load 178.9 MW
Total BMPC Load 108.5 MW

Figure ___

NSX -155.9 MW

CBX 436.2 MW

ONI 696.7 MW

ONS 803.4 MW

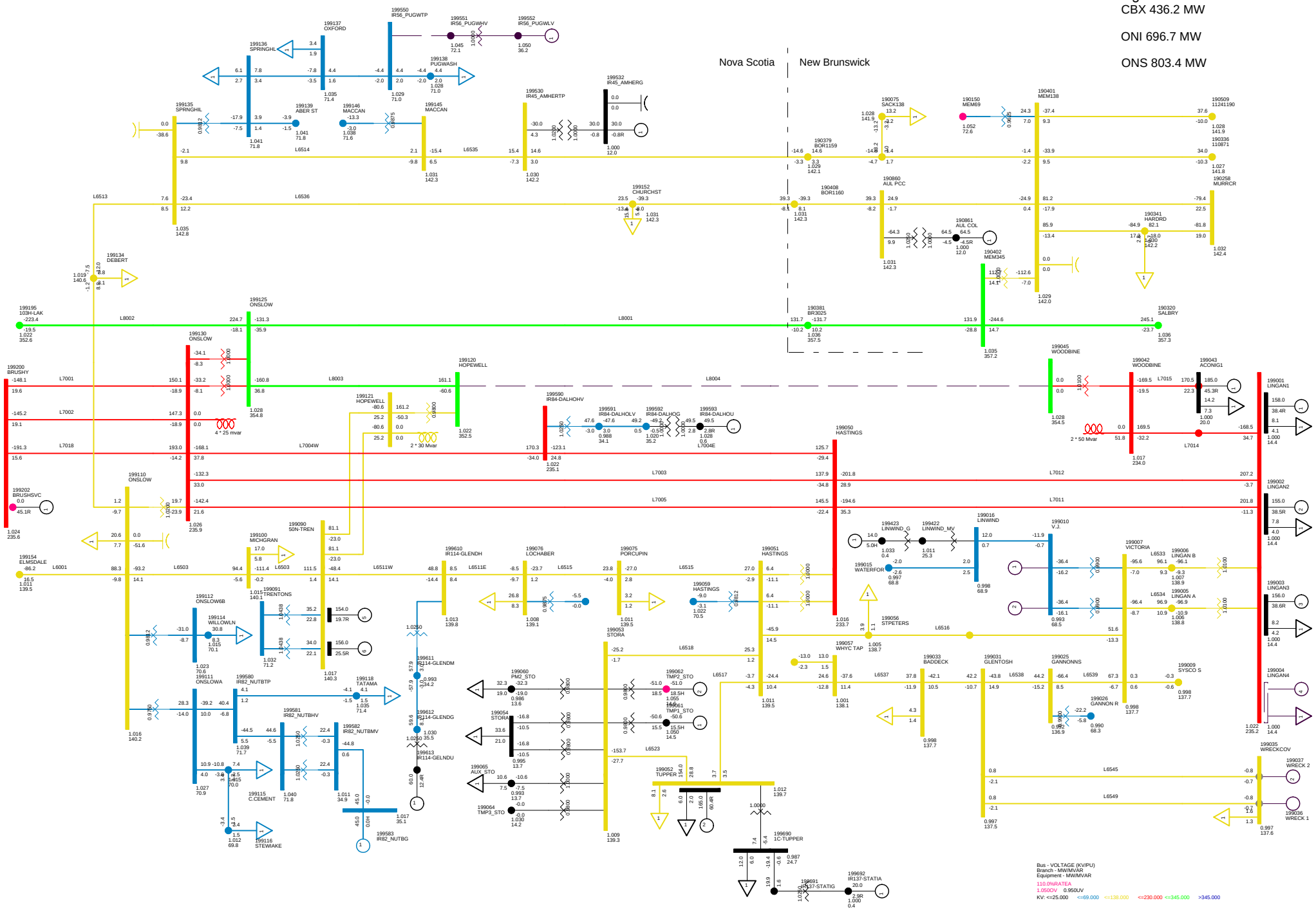

SUMMER PEAK NS-NB = 0
C01S LOSE L8004 WITH 1 UNIT SPS
NORTHEASTERN NS SUN, FEB 08 2009 8:23

Total Wind Gen: 105.0 MW
Gross Lingan 469.0 MW
Gross Pt Aconi 185.0 MW

Gross Tupper 165.0 MW
Gross Trenton 310.0 MW
Gross Tuft's Cove 153.2 MW

Gross Wreck Cove 0.0 MW
Gross Gas Turbine 0.0 MW
Gross Small Hydro 42.9 MW

Net Stora Load 178.9 MW
Total BMPC Load 108.5 MW

Figure ___

NSX -284.0 MW

CBX 300.9 MW

ONI 568.8 MW

ONS 803.1 MW

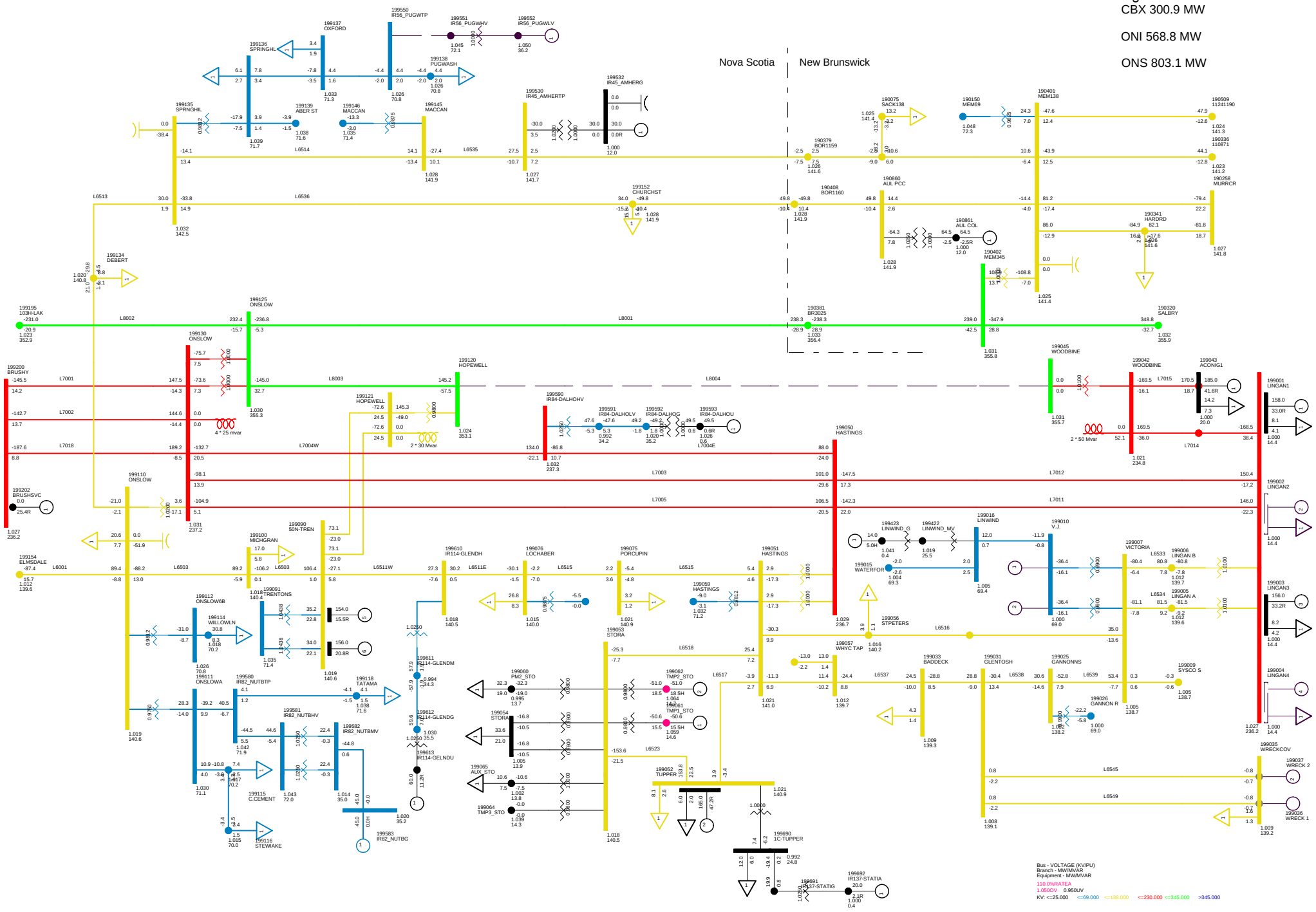

SUMMER PEAK NS-NB = 0
C01SS LOSE L8004 WITH 2 UNIT SPS
NORTHEASTERN NS SUN, FEB 08 2009 8:23

Total Wind Gen: 105.0 MW
Gross Lingan 314.0 MW
Gross Pt Aconi 185.0 MW

Gross Tupper 165.0 MW
Gross Trenton 310.0 MW
Gross Tuft's Cove 153.2 MW

Gross Wreck Cove 0.0 MW
Gross Gas Turbine 0.0 MW
Gross Small Hydro 42.9 MW

Net Stora Load 178.9 MW
Total BMPC Load 108.5 MW

Figure ___

NSX -37.4 MW

CBX 578.0 MW

ONI 818.1 MW

ONS 805.4 MW

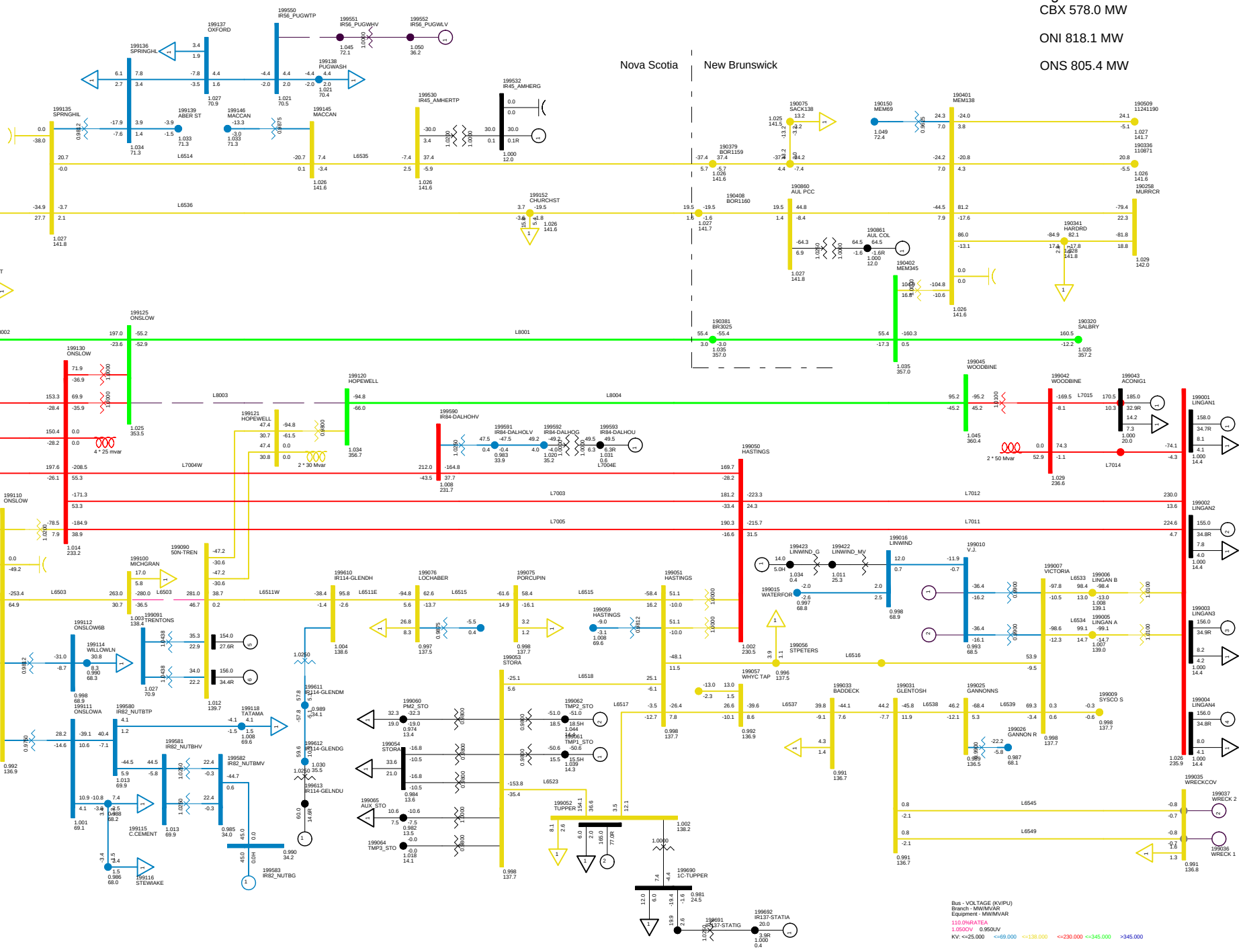

SUMMER PEAK NS-NB = 0
C02 LOSE L8003 NO SPS
NORTHEASTERN NS SUN, FEB 08 2009 8:23

Total Wind Gen: 105.0 MW
Gross Lingan 625.0 MW
Gross Pt Aconi 185.0 MW

Gross Tupper 165.0 MW
Gross Trenton 310.0 MW
Gross Tuft's Cove 153.2 MW

Gross Wreck Cove 0.0 MW
Gross Gas Turbine 0.0 MW
Gross Small Hydro 42.9 MW

Net Stora Load 178.9 MW
Total BMPC Load 108.5 MW

Figure ___

NSX -161.1 MW

CBX 441.2 MW

ONI 692.8 MW

ONS 804.4 MW

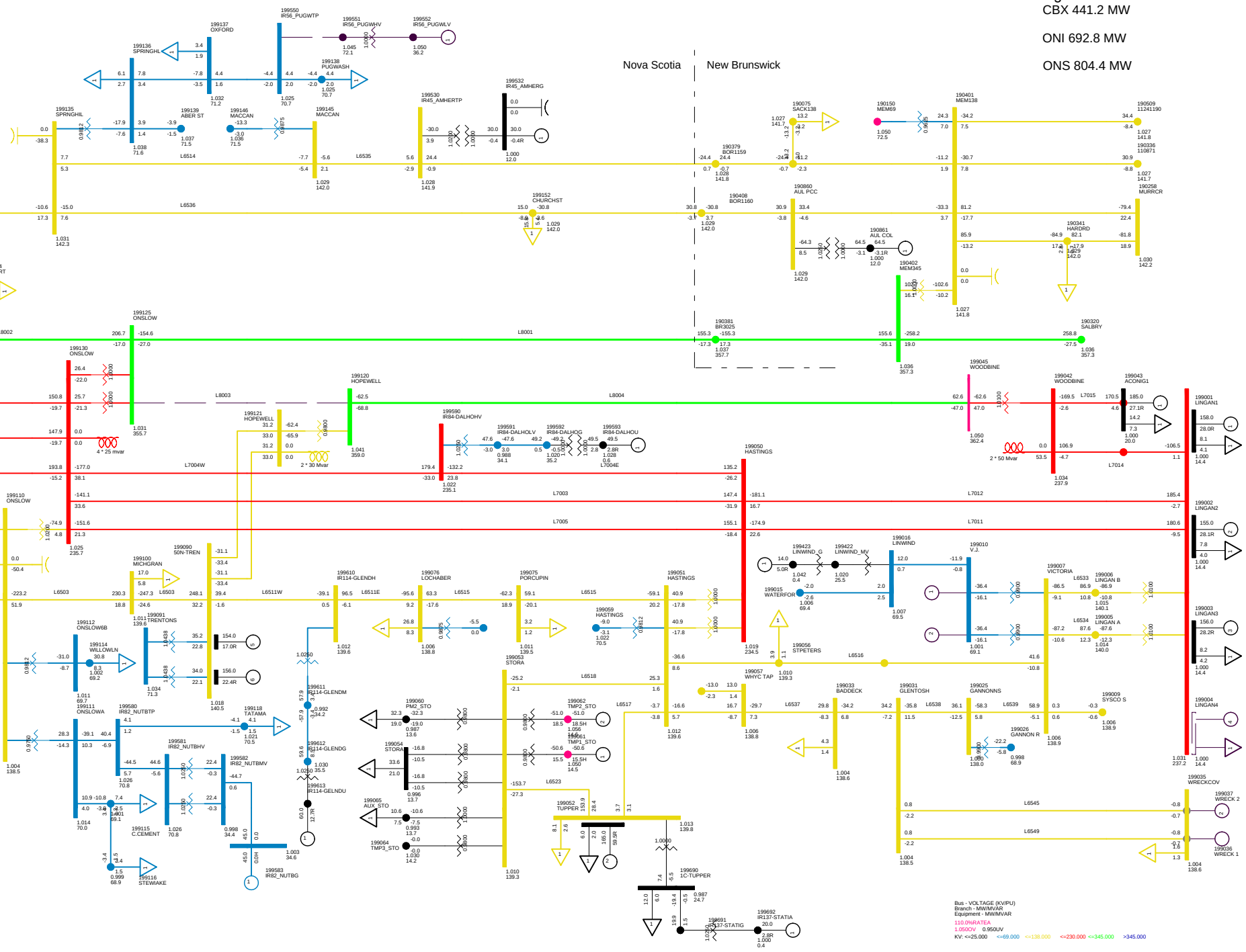

SUMMER PEAK NS-NB = 0
C02S LOSE L8003 WITH 1-UNIT SPS
NORTHEASTERN NS SUN, FEB 08 2009 8:23

Total Wind Gen: 105.0 MW
Gross Lingan 469.0 MW
Gross Pt Aconi 185.0 MW

Gross Tupper 165.0 MW
Gross Trenton 310.0 MW
Gross Tuft's Cove 153.2 MW

Gross Wreck Cove 0.0 MW
Gross Gas Turbine 0.0 MW
Gross Small Hydro 42.9 MW

Net Stora Load 178.9 MW
Total BMPC Load 108.5 MW

Figure ___

NSX -289.9 MW
CBX 303.0 MW
ONI 563.4 MW
ONS 803.9 MW

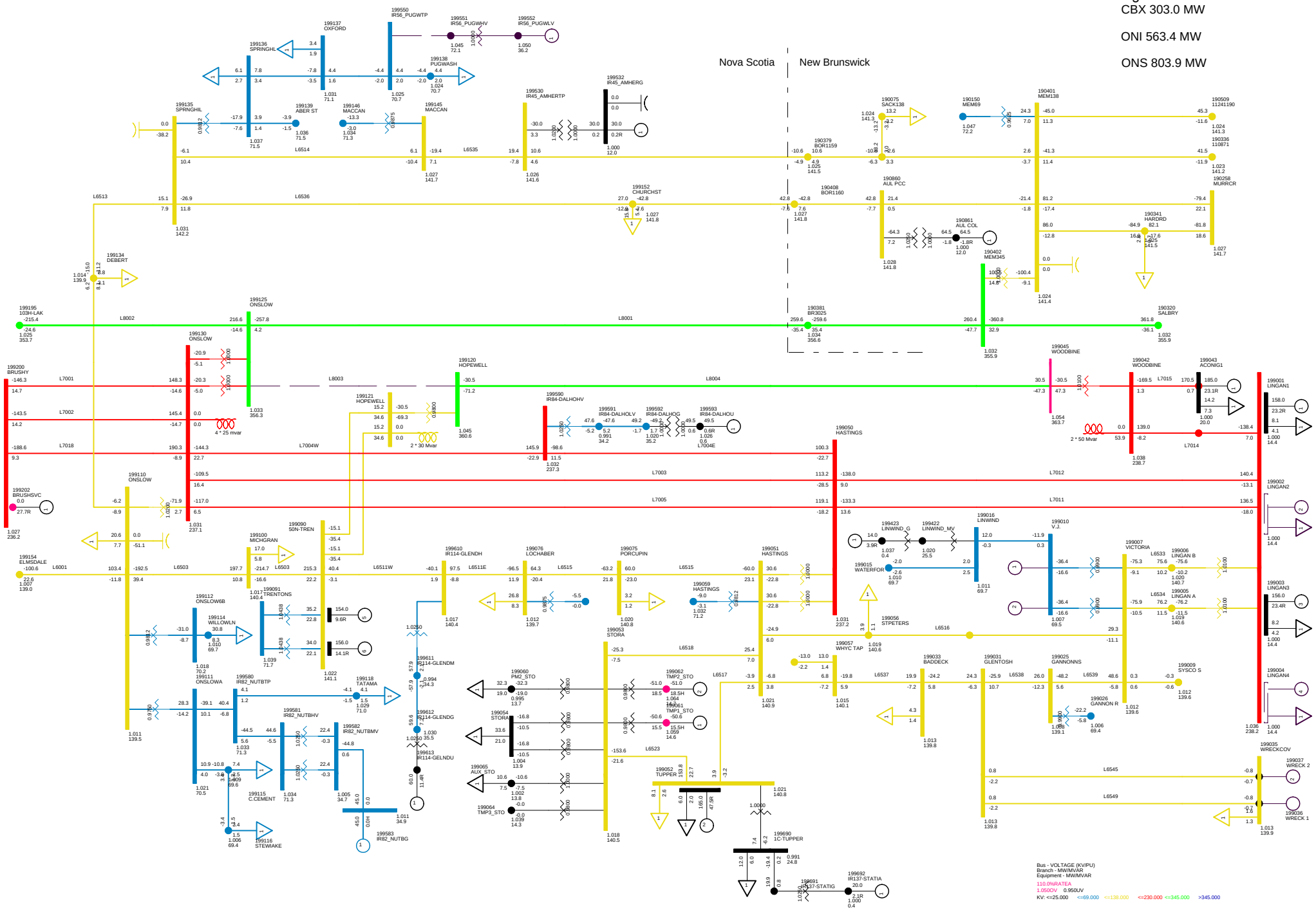

SUMMER PEAK NS-NB = 0
C02SS LOSE L8003 WITH 2-UNIT SPS
NORTHEASTERN NS SUN, FEB 08 2009 8:24

Total Wind Gen: 105.0 MW
Gross Lingan 314.0 MW
Gross Pt Aconi 185.0 MW

Gross Tupper 165.0 MW
Gross Trenton 310.0 MW
Gross Tuft's Cove 153.2 MW

Gross Wreck Cove 0.0 MW
Gross Gas Turbine 0.0 MW
Gross Small Hydro 42.9 MW

Net Stora Load 178.9 MW
Total BMPC Load 108.5 MW

Figure ___

NSX -10.7 MW

CBX 589.1 MW

ONI 851.0 MW

ONS 812.2 MW

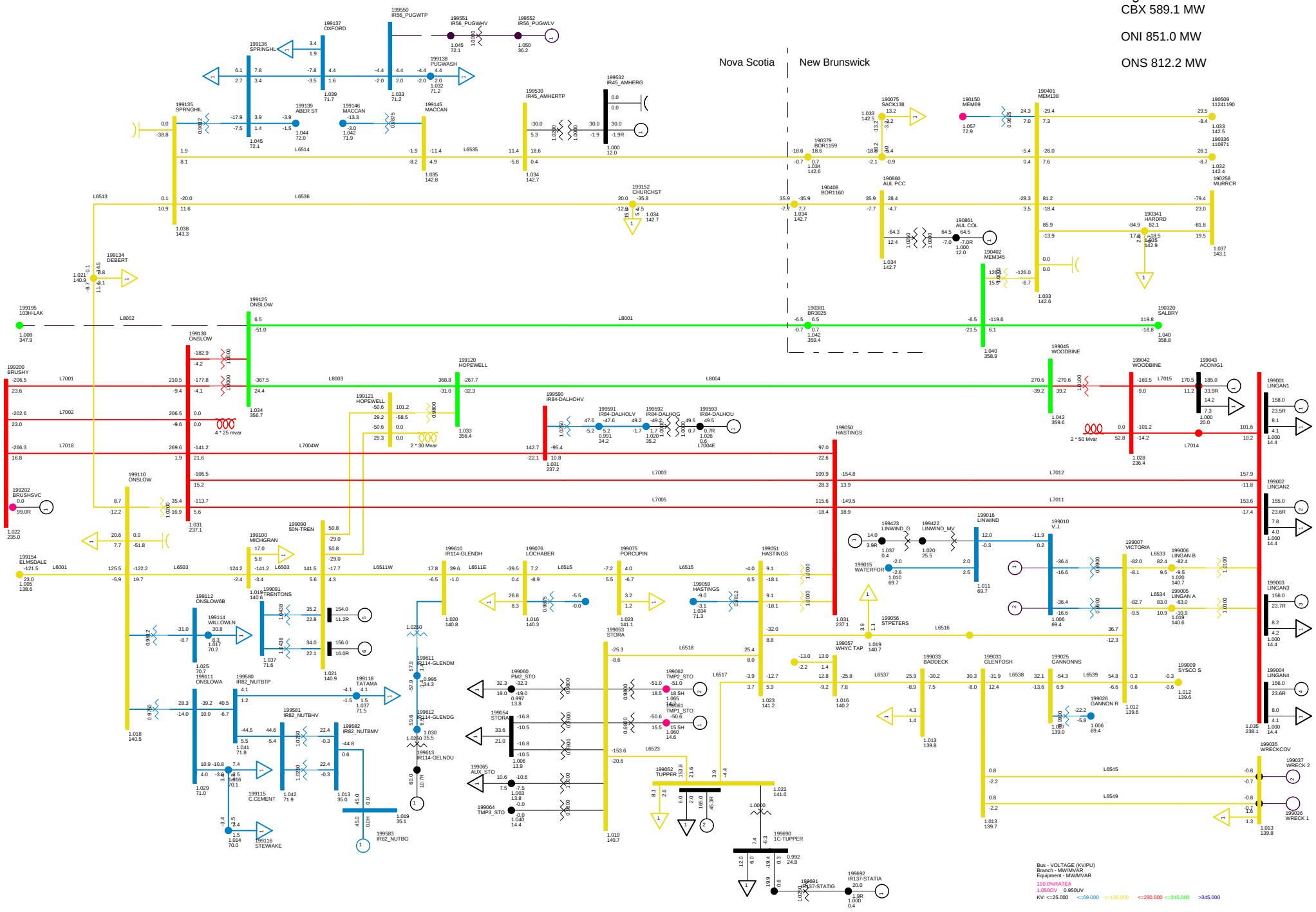

SUMMER PEAK NS-NB = 0
C03 LOSE L8002
NORTHEASTERN NS SUN, FEB 08 2009 8:24

Total Wind Gen: 105.0 MW
Gross Lingan 625.0 MW
Gross Pt Aconi 185.0 MW

Gross Tupper 165.0 MW
Gross Trenton 310.0 MW
Gross Tuft's Cove 153.2 MW

Gross Wreck Cove 0.0 MW
Gross Gas Turbine 0.0 MW
Gross Small Hydro 42.9 MW

Net Stora Load 178.9 MW
Total BMPC Load 108.5 MW

Figure ___

NSX -0.4 MW

CBX 589.5 MW

ONI 852.0 MW

ONS 803.0 MW

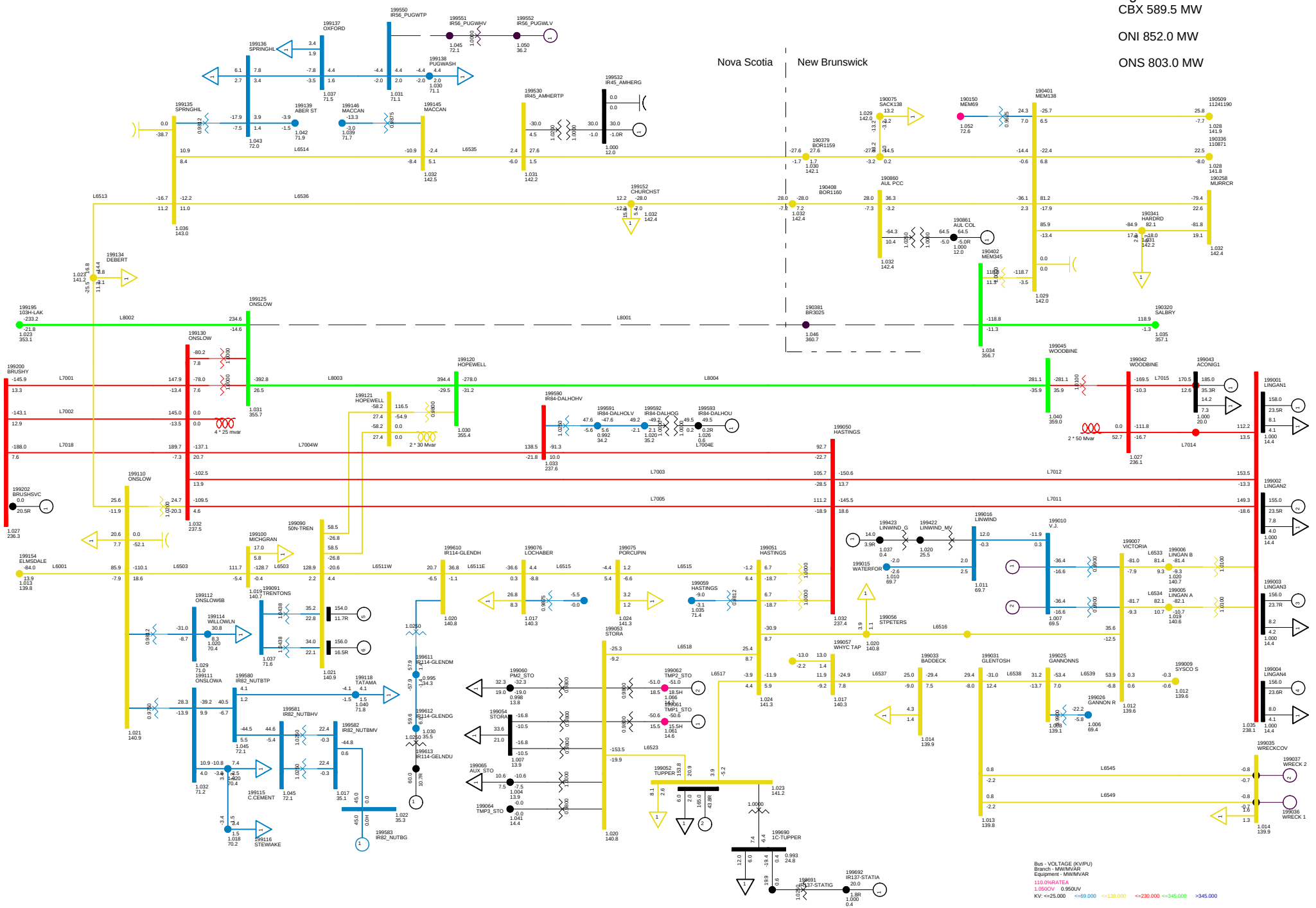

SUMMER PEAK NS-NB = 0
C04 LOSE L8001 NO SPS
NORTHEASTERN NS SUN, FEB 08 2009 8:24

Total Wind Gen: 105.0 MW
Gross Lingan 625.0 MW
Gross Pt Aconi 185.0 MW

Gross Tupper 165.0 MW
Gross Trenton 310.0 MW
Gross Tuft's Cove 153.2 MW

Gross Wreck Cove 0.0 MW
Gross Gas Turbine 0.0 MW
Gross Small Hydro 42.9 MW

Net Stora Load 178.9 MW
Total BMPC Load 108.5 MW

Figure ___

NSX 0.0 MW
CBX 589.6 MW
ONI 852.1 MW
ONS 802.8 MW

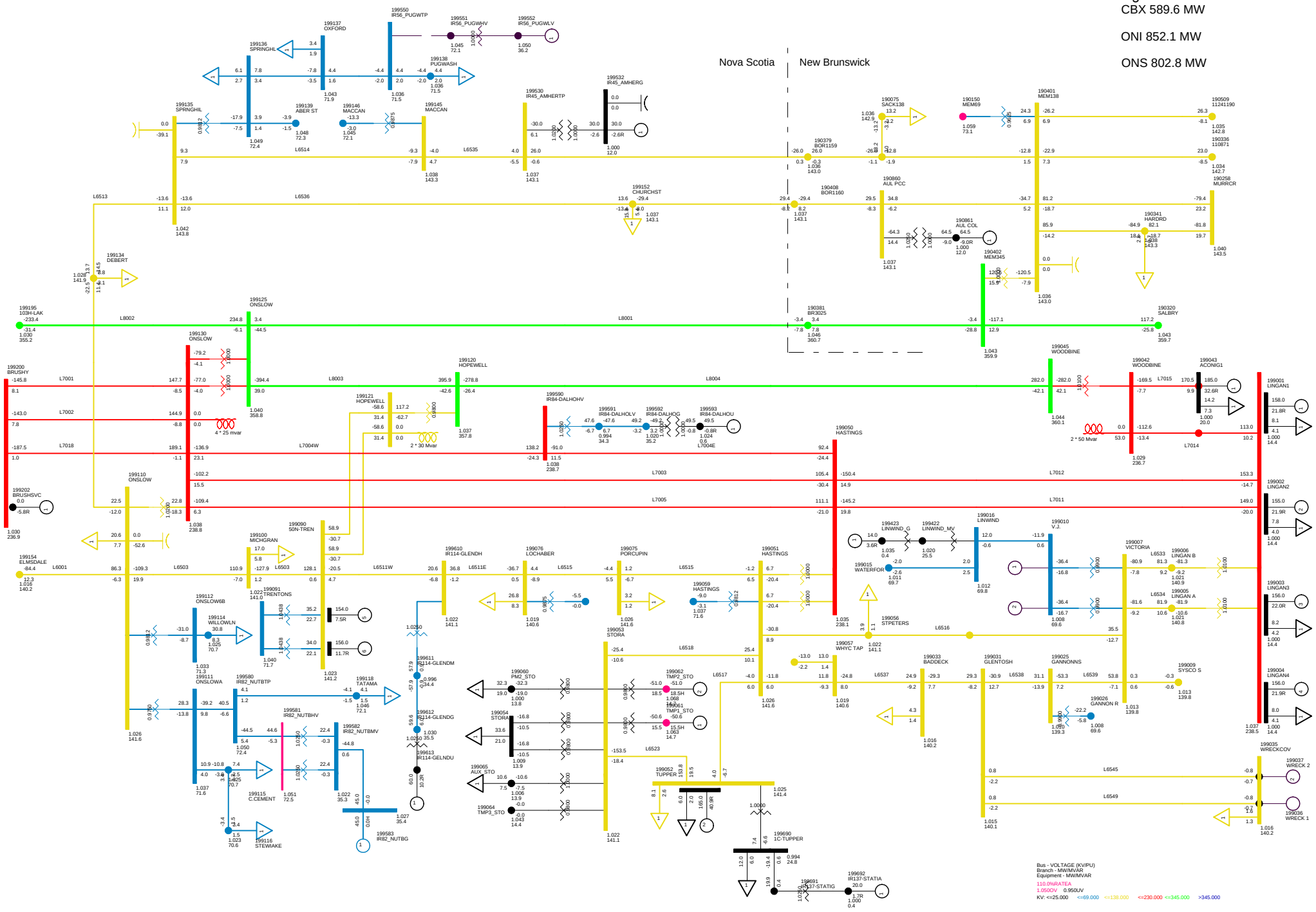

2010 SUMMER PEAK, NSLOAD=1700
NS-NB=0 NB-NE=1000; CBX=589; ONI=852 ONS=803
NORTHEASTERN NS SUN, FEB 08 2009 8:24

Total Wind Gen: 105.0 MW
Gross Lingan 625.0 MW
Gross Pt Aconi 185.0 MW

Gross Tupper 165.0 MW
Gross Trenton 310.0 MW
Gross Tuft's Cove 153.2 MW

Gross Wreck Cove 0.0 MW
Gross Gas Turbine 0.0 MW
Gross Small Hydro 42.9 MW

Net Stora Load 178.9 MW
Total BMPC Load 108.5 MW

Figure ___

NSX -4.6 MW

CBX 584.9 MW

ONI 847.6 MW

ONS 802.8 MW

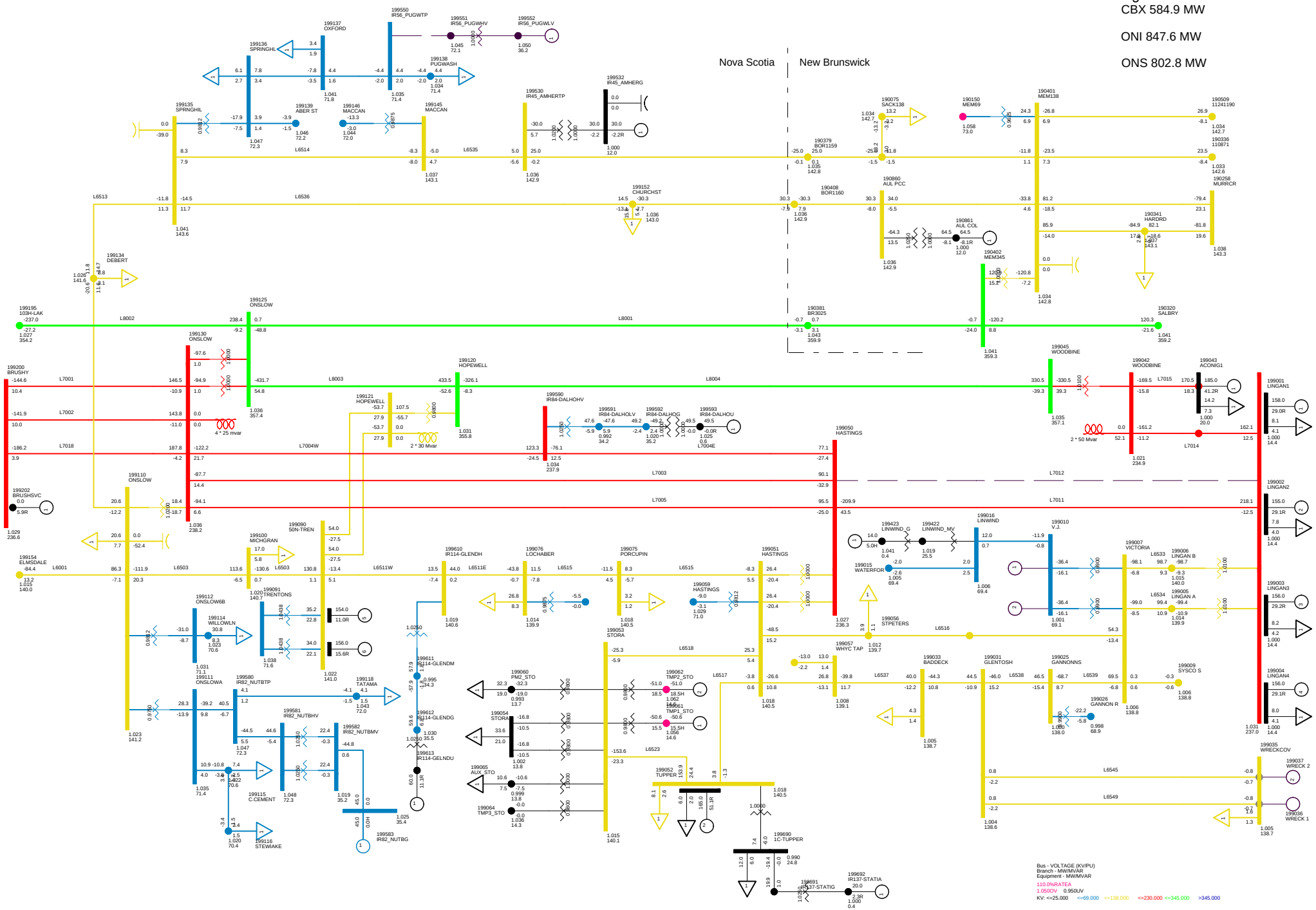

SUMMER PEAK NS-NB = 0
C05 LOSE L7012 NO SPS
NORTHEASTERN NS SUN, FEB 08 2009 8:24

Total Wind Gen: 105.0 MW
Gross Lingan 625.0 MW
Gross Pt Aconi 185.0 MW

Gross Tupper 165.0 MW
Gross Trenton 310.0 MW
Gross Tuft's Cove 153.2 MW

Gross Wreck Cove 0.0 MW
Gross Gas Turbine 0.0 MW
Gross Small Hydro 42.9 MW

Net Stora Load 178.9 MW
Total BMPC Load 108.5 MW

Figure ___

NSX -138.4 MW

CBX 446.3 MW

ONI 713.7 MW

ONS 802.8 MW

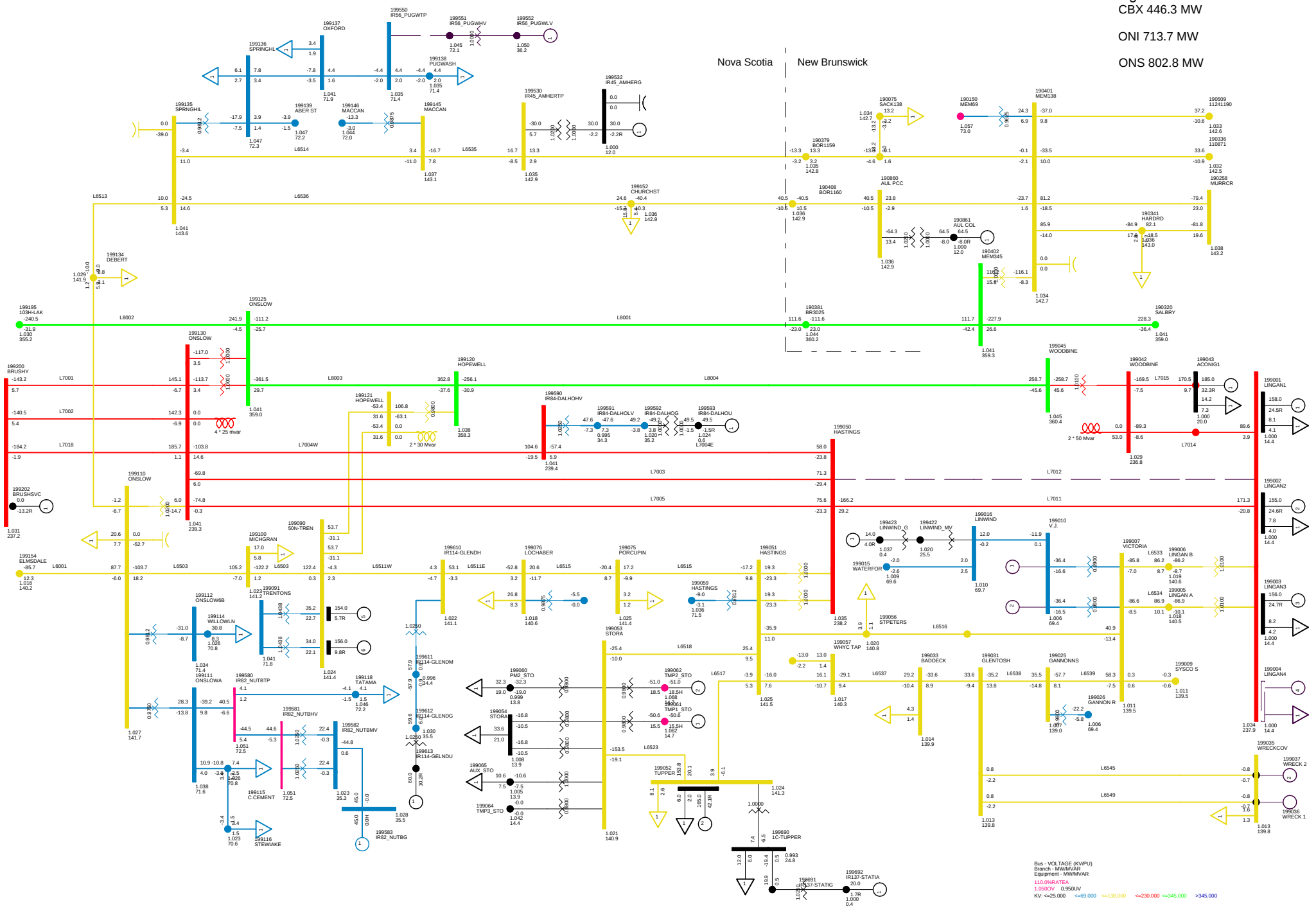

SUMMER PEAK NS-NB = 0
C05S LOSE L7012 WITH SPS
NORTHEASTERN NS SUN, FEB 08 2009 8:24

Total Wind Gen: 105.0 MW
Gross Lingan 469.0 MW
Gross Pt Aconi 185.0 MW

Gross Tupper 165.0 MW
Gross Trenton 310.0 MW
Gross Tuft's Cove 153.2 MW

Gross Wreck Cove 0.0 MW
Gross Gas Turbine 0.0 MW
Gross Small Hydro 42.9 MW

Net Stora Load 178.9 MW
Total BMPC Load 108.5 MW

Figure ___

NSX -2.4 MW

CBX 587.1 MW

ONI 849.8 MW

ONS 802.8 MW

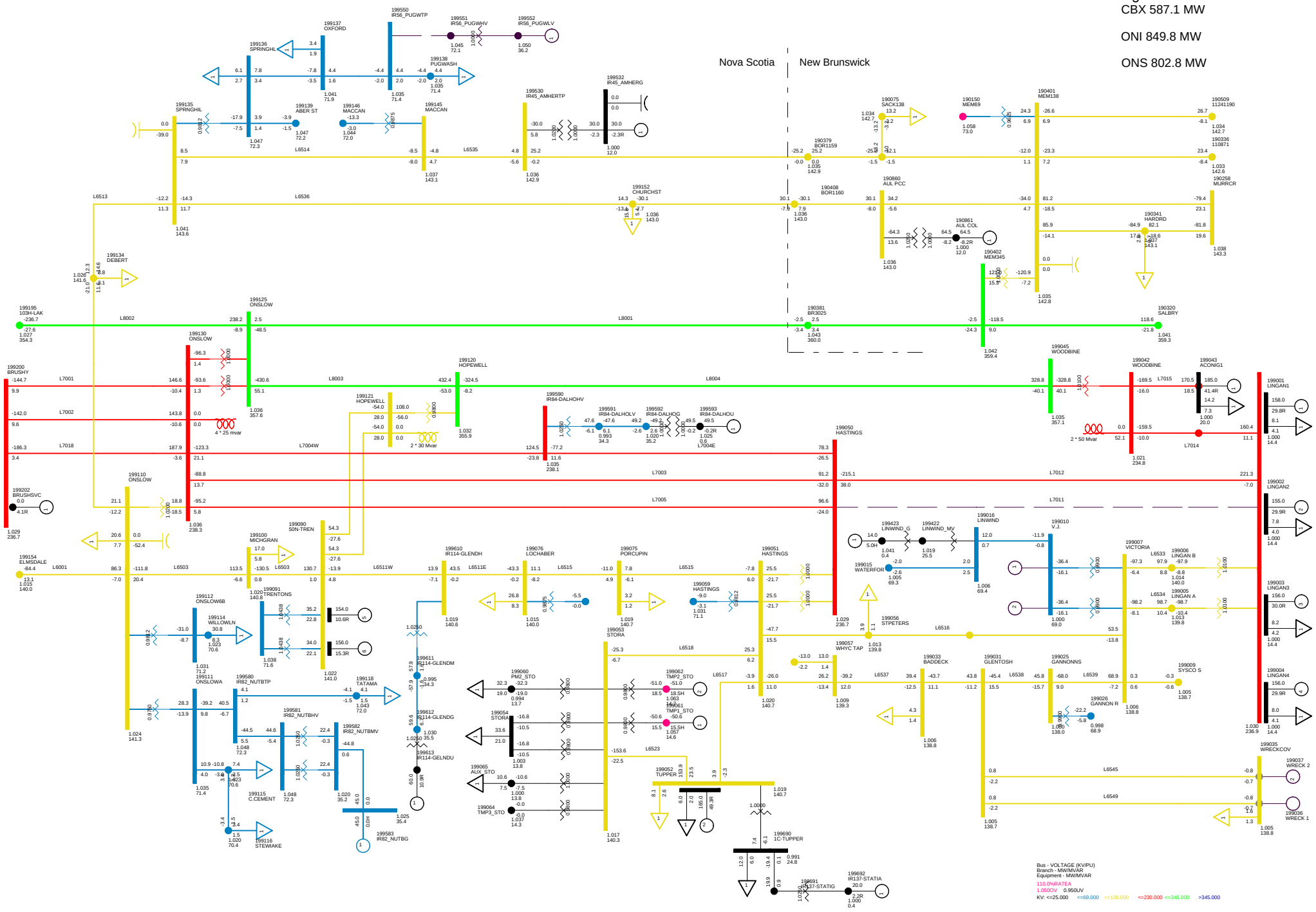

SUMMER PEAK NS-NB = 0
C06 LOSE L7011
NORTHEASTERN NS SUN, FEB 08 2009 8:25

Total Wind Gen: 105.0 MW
Gross Lingan 625.0 MW
Gross Pt Aconi 185.0 MW

Gross Tupper 165.0 MW
Gross Trenton 310.0 MW
Gross Tuft's Cove 153.2 MW

Gross Wreck Cove 0.0 MW
Gross Gas Turbine 0.0 MW
Gross Small Hydro 42.9 MW

Net Stora Load 178.9 MW
Total BMPC Load 108.5 MW

Figure ___

NSX -3.5 MW

CBX 590.4 MW

ONI 848.8 MW

ONS 802.9 MW

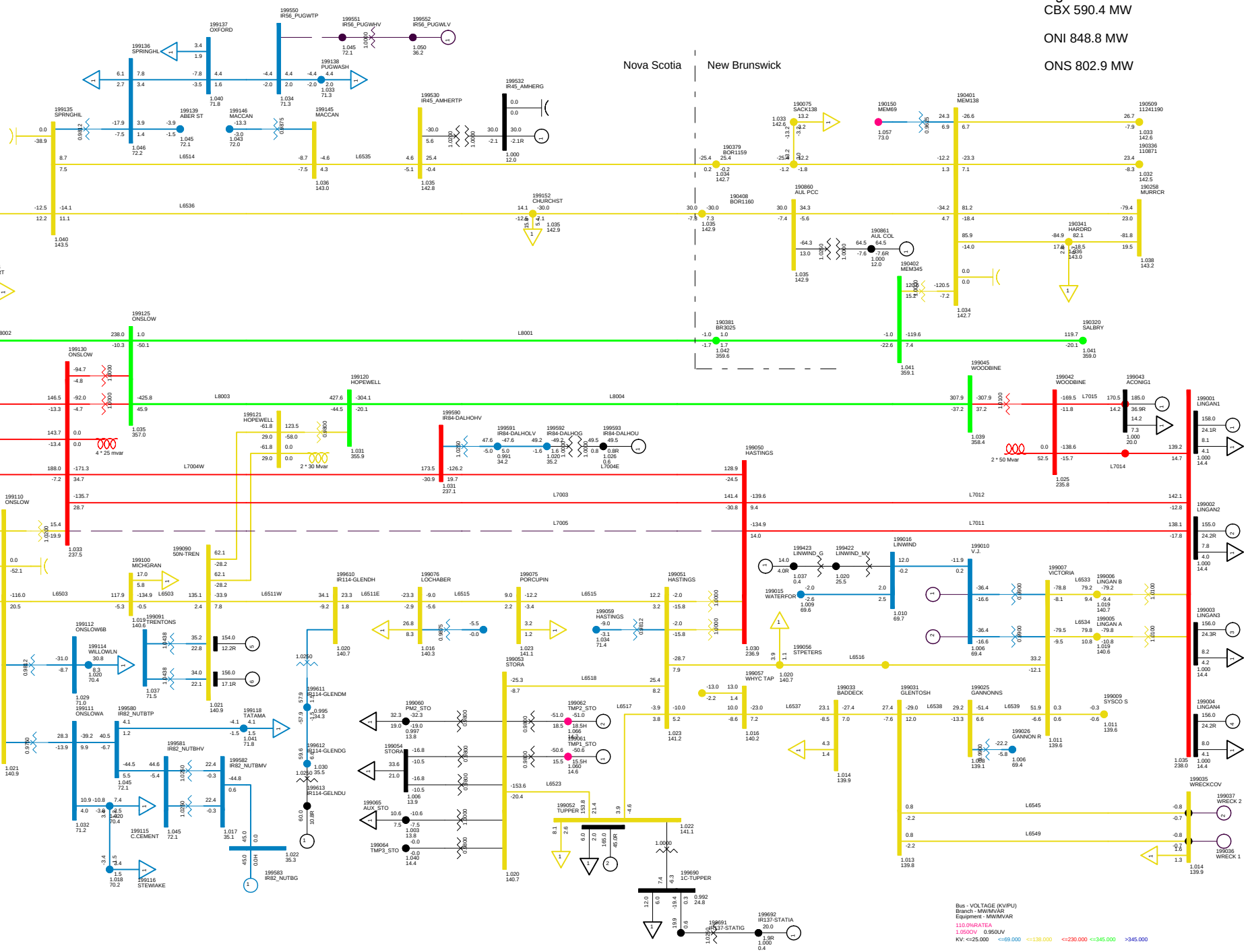

SUMMER PEAK NS-NB = 0
C07 LOSE L7005
NORTHEASTERN NS SUN, FEB 08 2009 8:25

Total Wind Gen: 105.0 MW
Gross Lingan 625.0 MW
Gross Pt Aconi 185.0 MW

Gross Tupper 165.0 MW
Gross Trenton 310.0 MW
Gross Tuft's Cove 153.2 MW

Gross Wreck Cove 0.0 MW
Gross Gas Turbine 0.0 MW
Gross Small Hydro 42.9 MW

Net Stora Load 178.9 MW
Total BMPC Load 108.5 MW

Figure ___

NSX -4.5 MW

CBX 589.7 MW

ONI 852.2 MW

ONS 807.4 MW

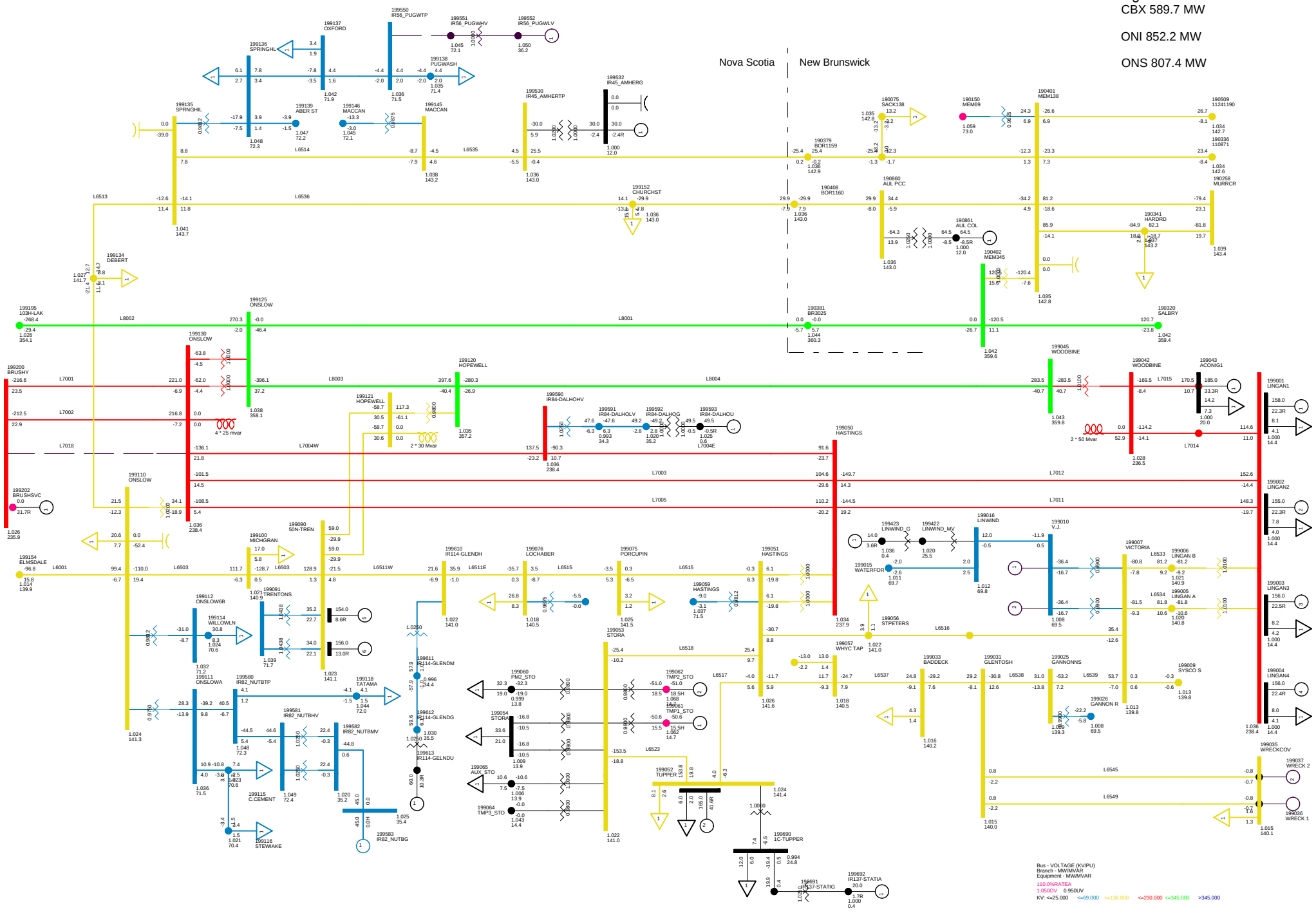

SUMMER PEAK NS-NB = 0
C08 LOSE L7018
NORTHEASTERN NS SUN, FEB 08 2009 8:25

Total Wind Gen: 105.0 MW
Gross Lingan 625.0 MW
Gross Pt Aconi 185.0 MW

Gross Tupper 165.0 MW
Gross Trenton 310.0 MW
Gross Tuft's Cove 153.2 MW

Gross Wreck Cove 0.0 MW
Gross Gas Turbine 0.0 MW
Gross Small Hydro 42.9 MW

Net Stora Load 178.9 MW
Total BMPC Load 108.5 MW

Figure ___

Total Wind Gen: 105.0 MW | Gross Tupper 165.0 MW | Gross Wreck Cove 0.0 MW

Gross Lingan 625.0 MW | Gross Trenton 310.0 MW | Gross Gas Turbine 0.0 MW

Gross Pt Aconi 185.0 MW | Gross Tuft's Cove 153.2 MW | Gross Small Hydro 42.9 MW

Net Stora Load 178.9 MW | Total BMPC Load 108.5 MW

NSX -2.2 MW

CBX 589.6 MW

ONI 852.1 MW

ONS 805.0 MW

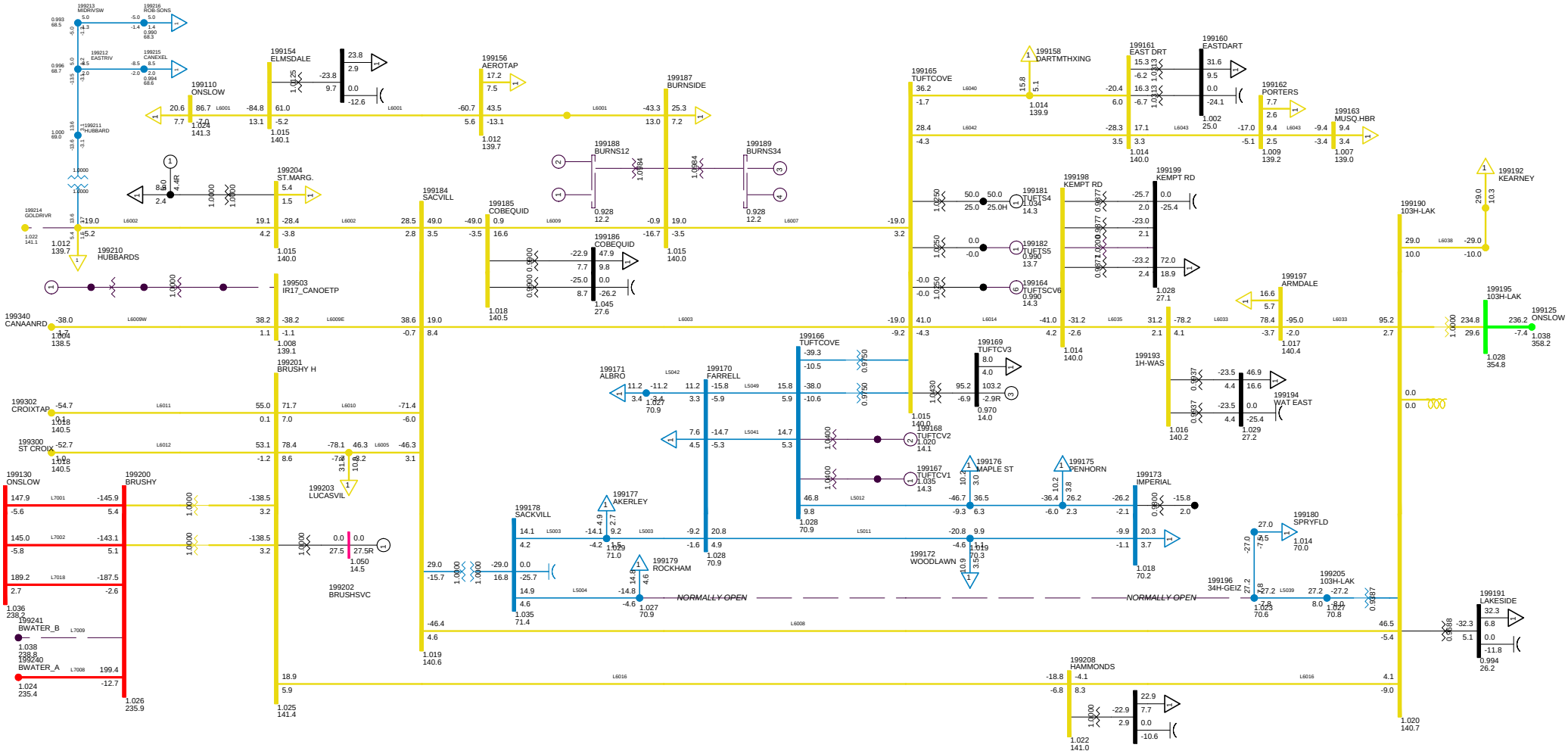

SUMMER PEAK NS-NB = 0
C09 LOSE L7009
METRO ZONE SUN, FEB 08 2009 8:25

Bus - VOLTAGE (KV/PU)
Branch - MW/MVAR
Equipment - MW/MVAR
100.0%RATEA
1.050OV 0.950UV
KV: <=30.000 <=69.000 <=138.000 <=230.000 <=345.000 >345.000

Figure __

NSX -3.3 MW

CBX 590.7 MW

ONI 848.9 MW

ONS 802.9 MW

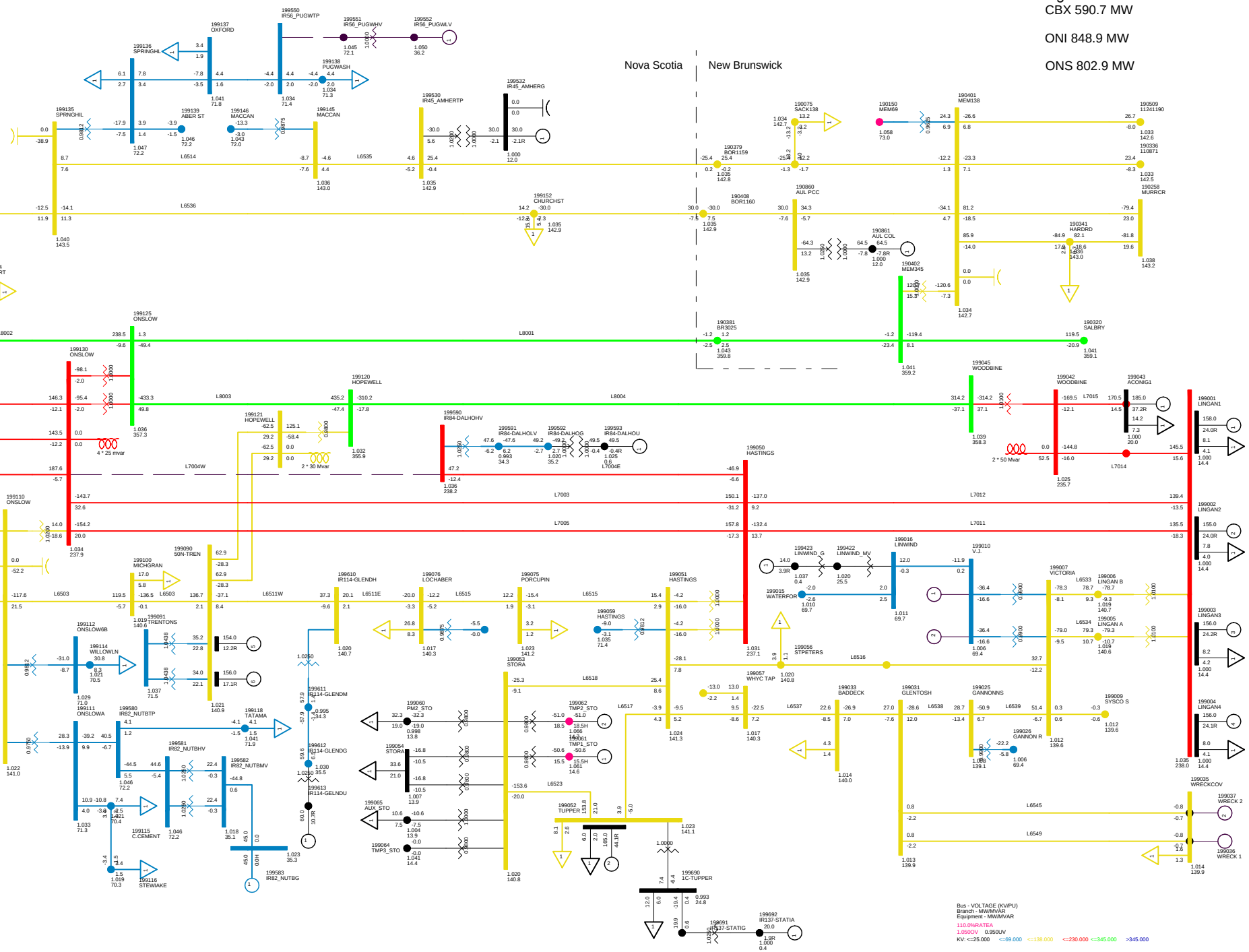

SUMMER PEAK NS-NB = 0
C10 LOSE L7004 WEST
NORTHEASTERN NS SUN, FEB 08 2009 8:25

Total Wind Gen: 105.0 MW
Gross Lingan 625.0 MW
Gross Pt Aconi 185.0 MW

Gross Tupper 165.0 MW
Gross Trenton 310.0 MW
Gross Tuft's Cove 153.2 MW

Gross Wreck Cove 0.0 MW
Gross Gas Turbine 0.0 MW
Gross Small Hydro 42.9 MW

Net Stora Load 178.9 MW
Total BMPC Load 108.5 MW

Figure ___

NSX -8.4 MW
CBX 583.9 MW
ONI 843.9 MW
ONS 803.0 MW

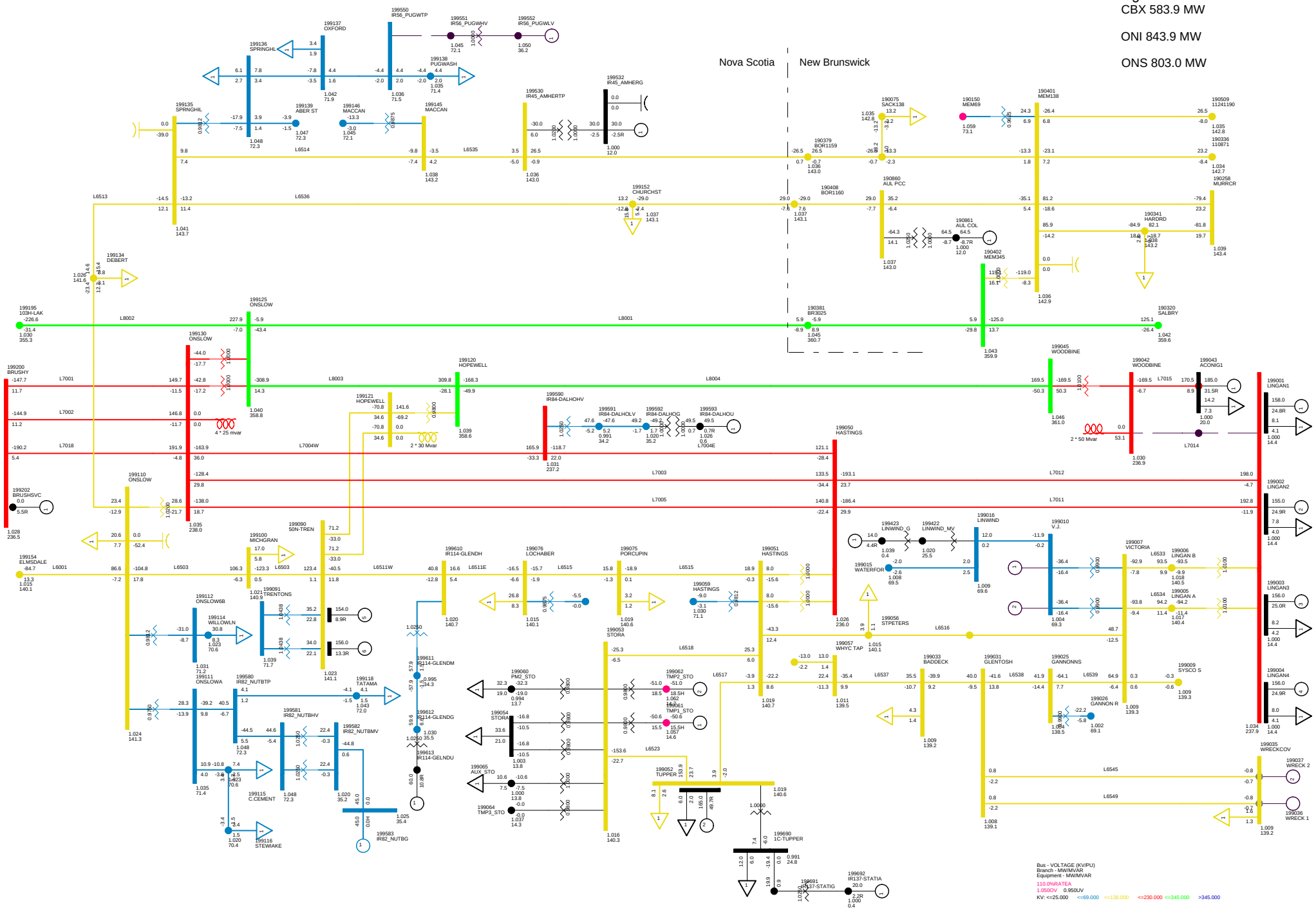

SUMMER PEAK NS-NB = 0
C11 LOSE L7014
NORTHEASTERN NS SUN, FEB 08 2009 8:25

Total Wind Gen: 105.0 MW
Gross Lingan 625.0 MW
Gross Pt Aconi 185.0 MW

Gross Tupper 165.0 MW
Gross Trenton 310.0 MW
Gross Tuft's Cove 153.2 MW

Gross Wreck Cove 0.0 MW
Gross Gas Turbine 0.0 MW
Gross Small Hydro 42.9 MW

Net Stora Load 178.9 MW
Total BMPC Load 108.5 MW

Figure ___

NSX 0.0 MW
CBX 589.6 MW
ONI 852.1 MW
ONS 802.8 MW

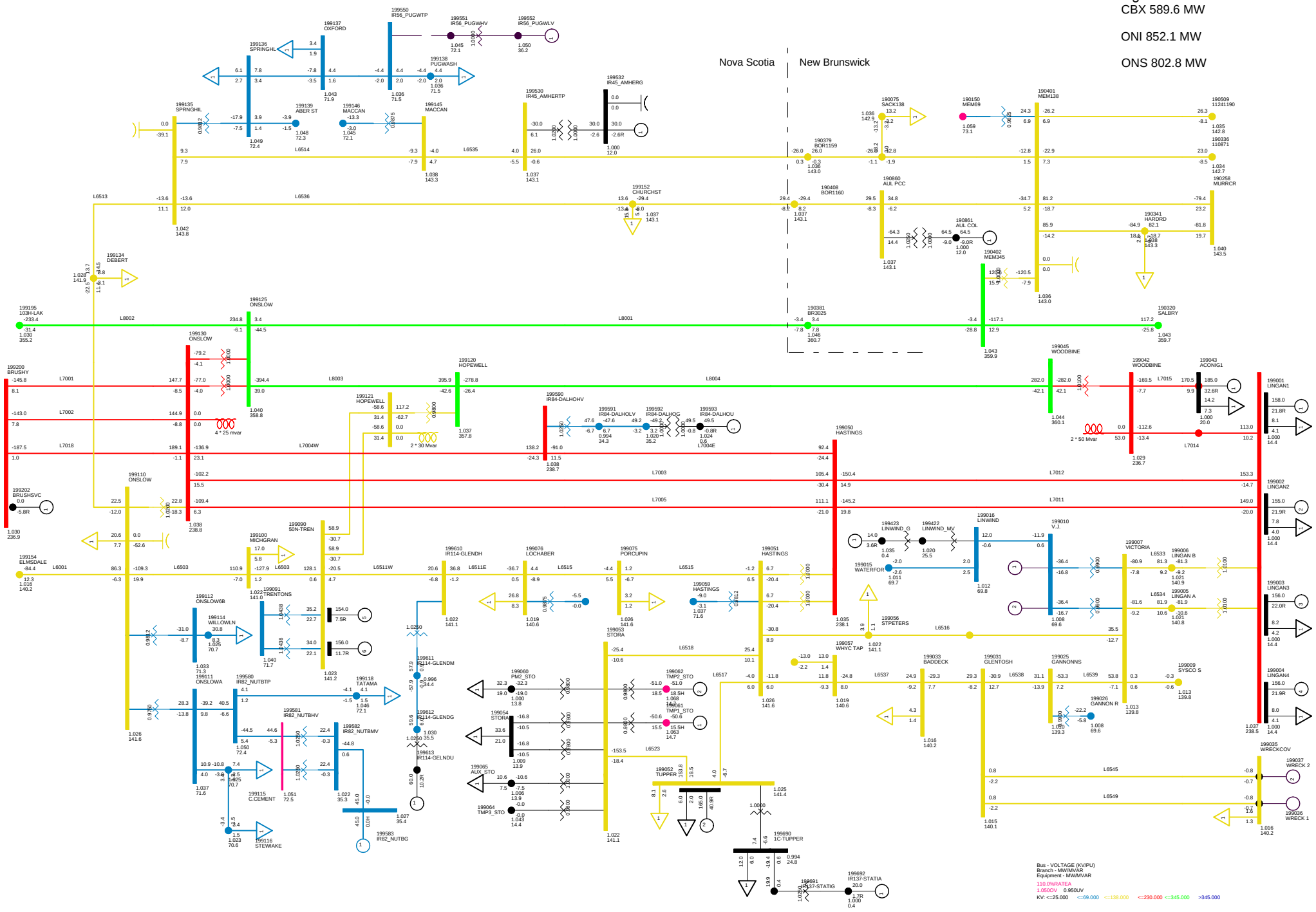

2010 SUMMER PEAK, NSLOAD=1700
NS-NB=0 NB-NE=1000; CBX=589; ONI=852 ONS=803
NORTHEASTERN NS SUN, FEB 08 2009 8:25

Total Wind Gen: 105.0 MW
Gross Lingan 625.0 MW
Gross Pt Aconi 185.0 MW

Gross Tupper 165.0 MW
Gross Trenton 310.0 MW
Gross Tuft's Cove 153.2 MW

Gross Wreck Cove 0.0 MW
Gross Gas Turbine 0.0 MW
Gross Small Hydro 42.9 MW

Net Stora Load 178.9 MW
Total BMPC Load 108.5 MW

Figure ___

NSX 14.8 MW

CBX 589.3 MW

ONI 866.6 MW

ONS 802.5 MW

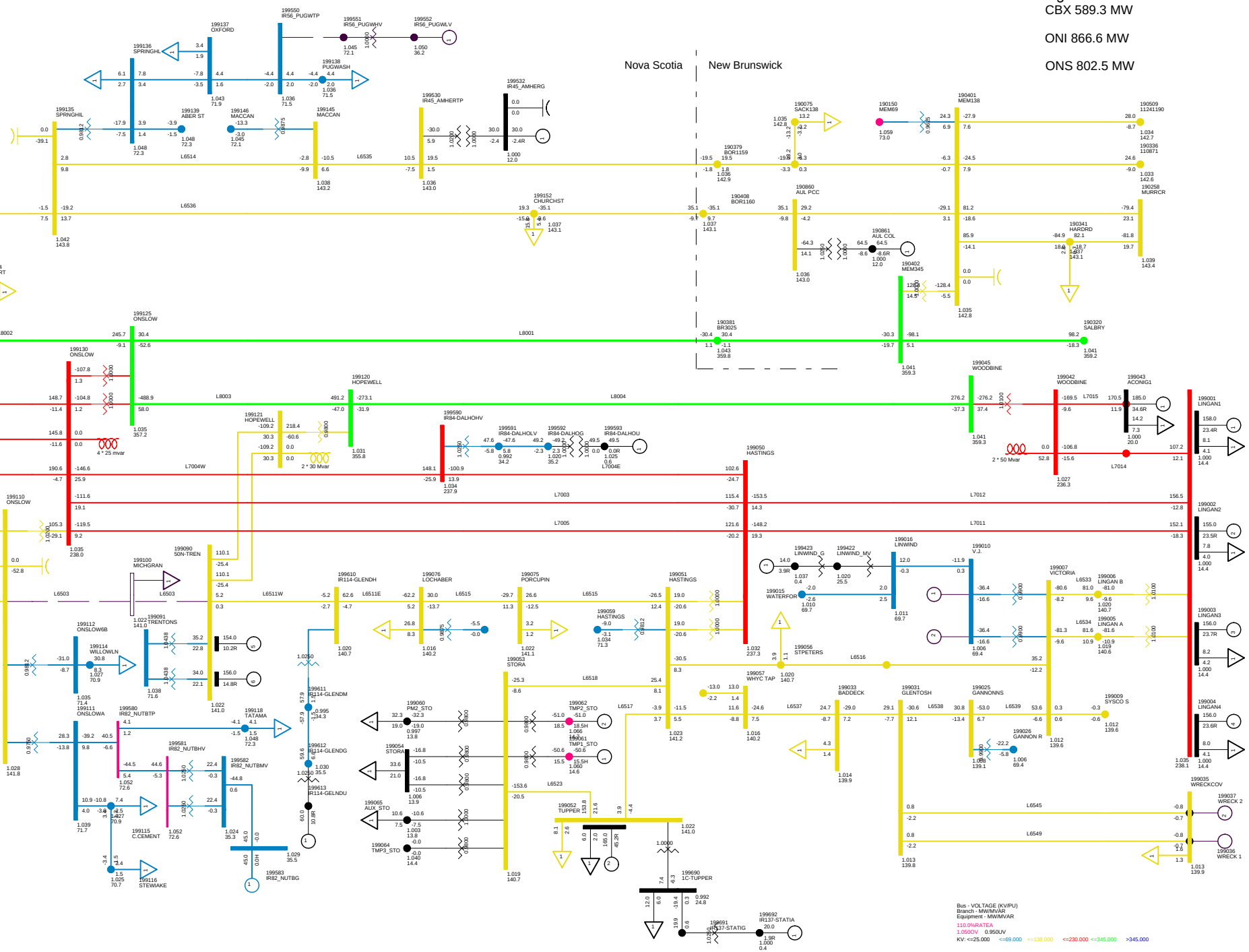

SUMMER PEAK NS-NB = 0
C12 LOSE 6503
NORTHEASTERN NS SUN, FEB 08 2009 8:25

Total Wind Gen: 105.0 MW
Gross Lingan 625.0 MW
Gross Pt Aconi 185.0 MW

Gross Tupper 165.0 MW
Gross Trenton 310.0 MW
Gross Tuft's Cove 153.2 MW

Gross Wreck Cove 0.0 MW
Gross Gas Turbine 0.0 MW
Gross Small Hydro 42.9 MW

Net Stora Load 178.9 MW
Total BMPC Load 108.5 MW

Figure ___

NSX 3.1 MW

CBX 589.6 MW

ONI 855.2 MW

ONS 802.8 MW

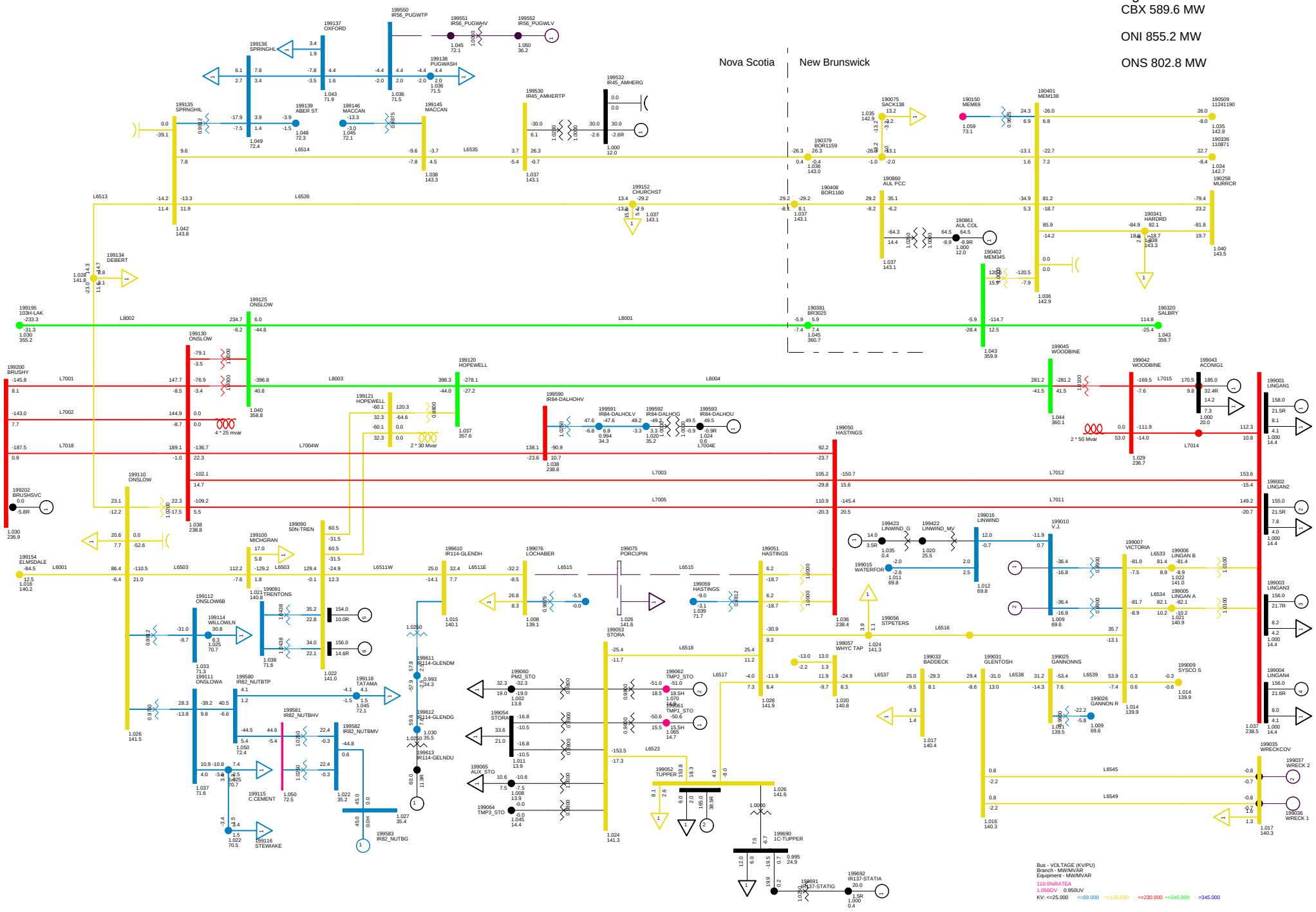

SUMMER PEAK NS-NB = 0
C13 LOSE L6511
NORTHEASTERN NS SUN, FEB 08 2009 8:26

Total Wind Gen: 105.0 MW
Gross Lingan 625.0 MW
Gross Pt Aconi 185.0 MW

Gross Tupper 165.0 MW
Gross Trenton 310.0 MW
Gross Tuft's Cove 153.2 MW

Gross Wreck Cove 0.0 MW
Gross Gas Turbine 0.0 MW
Gross Small Hydro 42.9 MW

Net Stora Load 178.9 MW
Total BMPC Load 108.5 MW

Figure ___

NSX -0.5 MW

CBX 589.1 MW

ONI 851.6 MW

ONS 802.8 MW

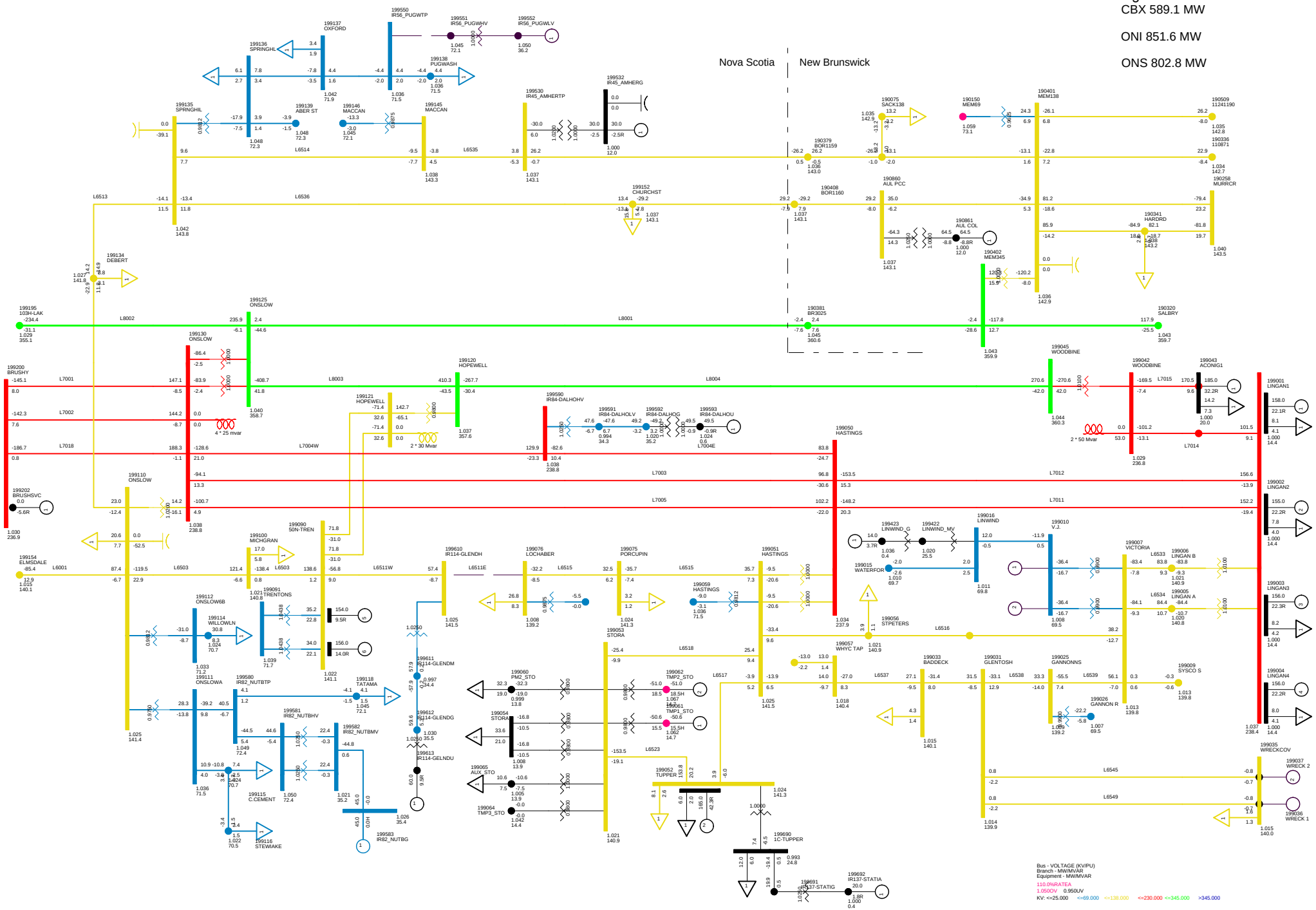

SUMMER PEAK NS-NB = 0
C14 LOSE L6511E
NORTHEASTERN NS SUN, FEB 08 2009 8:26

Total Wind Gen: 105.0 MW
Gross Lingan 625.0 MW
Gross Pt Aconi 185.0 MW

Gross Tupper 165.0 MW
Gross Trenton 310.0 MW
Gross Tuft's Cove 153.2 MW

Gross Wreck Cove 0.0 MW
Gross Gas Turbine 0.0 MW
Gross Small Hydro 42.9 MW

Net Stora Load 178.9 MW
Total BMPC Load 108.5 MW

Figure ___

NSX -0.5 MW

CBX 589.9 MW

ONI 851.6 MW

ONS 802.8 MW

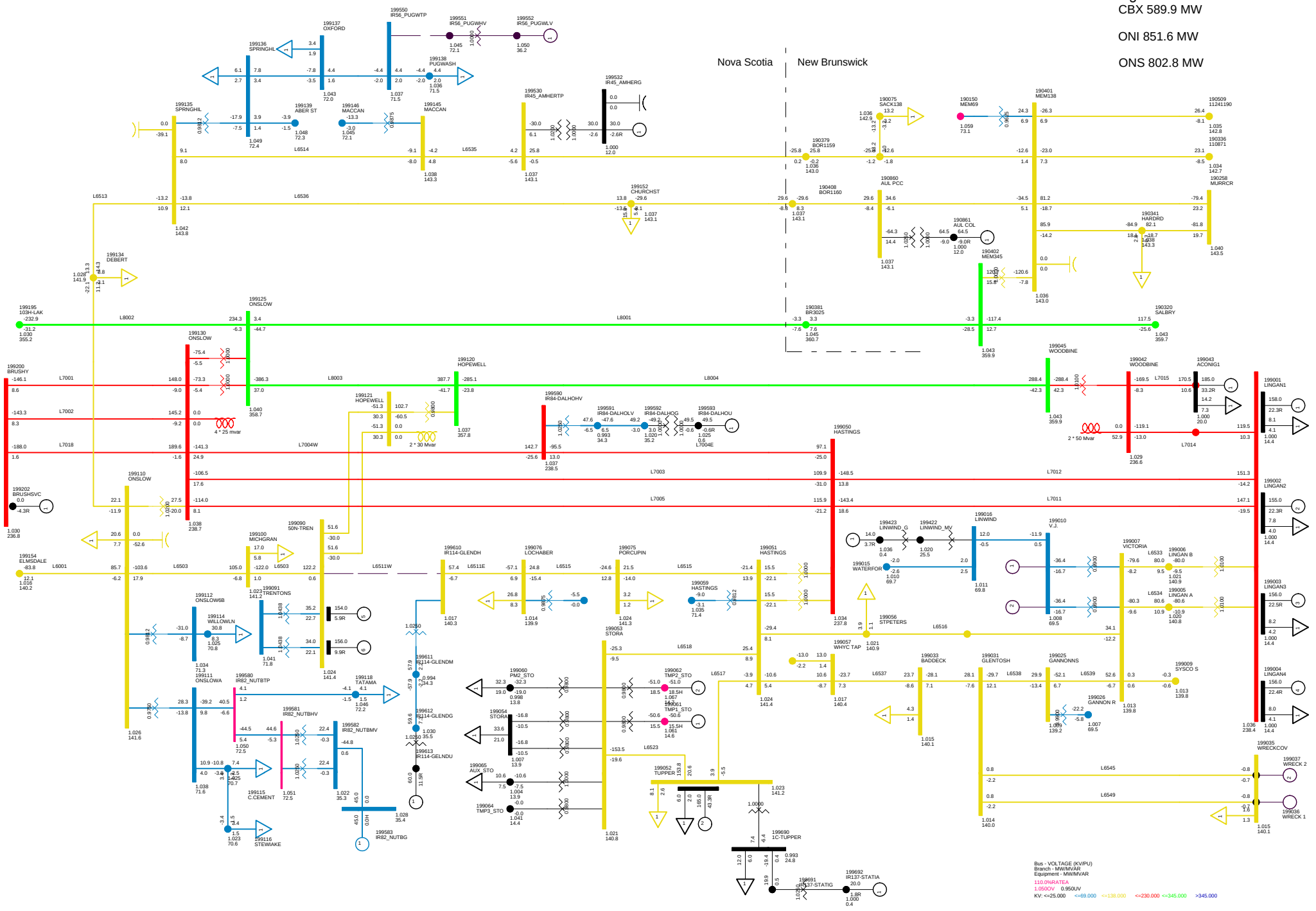

SUMMER PEAK NS-NB = 0
C15 LOSE L6511W
NORTHEASTERN NS SUN, FEB 08 2009 8:26

Total Wind Gen: 105.0 MW
Gross Lingan 625.0 MW
Gross Pt Aconi 185.0 MW

Gross Tupper 165.0 MW
Gross Trenton 310.0 MW
Gross Tuft's Cove 153.2 MW

Gross Wreck Cove 0.0 MW
Gross Gas Turbine 0.0 MW
Gross Small Hydro 42.9 MW

Net Stora Load 178.9 MW
Total BMPC Load 108.5 MW

Figure ___

NSX 8.8 MW
CBX 589.7 MW
ONI 852.2 MW
ONS 802.9 MW

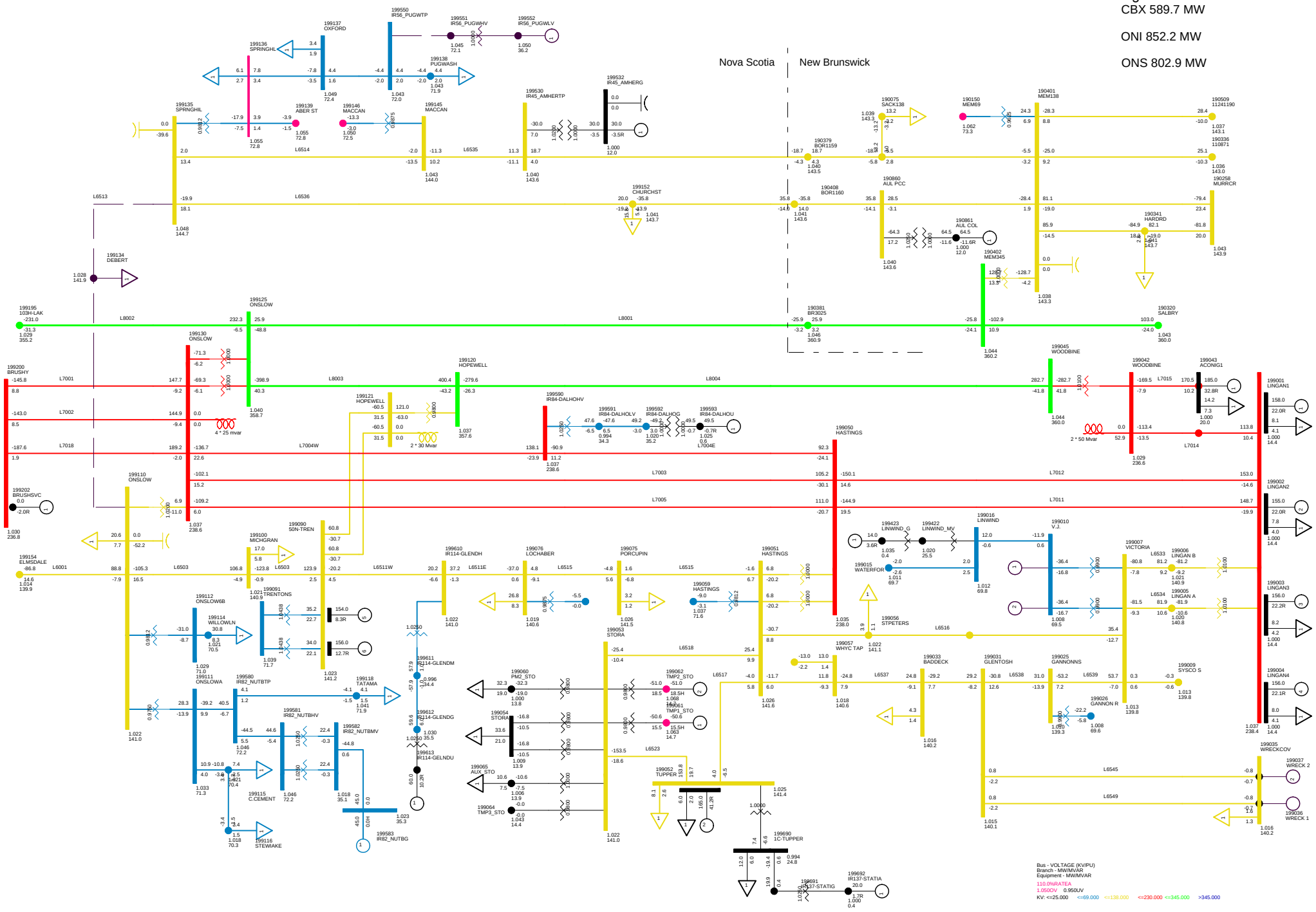

SUMMER PEAK NS-NB = 0
C16 LOSE L6513
NORTHEASTERN NS SUN, FEB 08 2009 8:26

Total Wind Gen: 105.0 MW
Gross Lingan 625.0 MW
Gross Pt Aconi 185.0 MW

Gross Tupper 165.0 MW
Gross Trenton 310.0 MW
Gross Tuft's Cove 153.2 MW

Gross Wreck Cove 0.0 MW
Gross Gas Turbine 0.0 MW
Gross Small Hydro 42.9 MW

Net Stora Load 178.9 MW
Total BMPC Load 108.5 MW

Figure ___

NSX 15.8 MW

CBX 589.6 MW

ONI 852.1 MW

ONS 802.8 MW

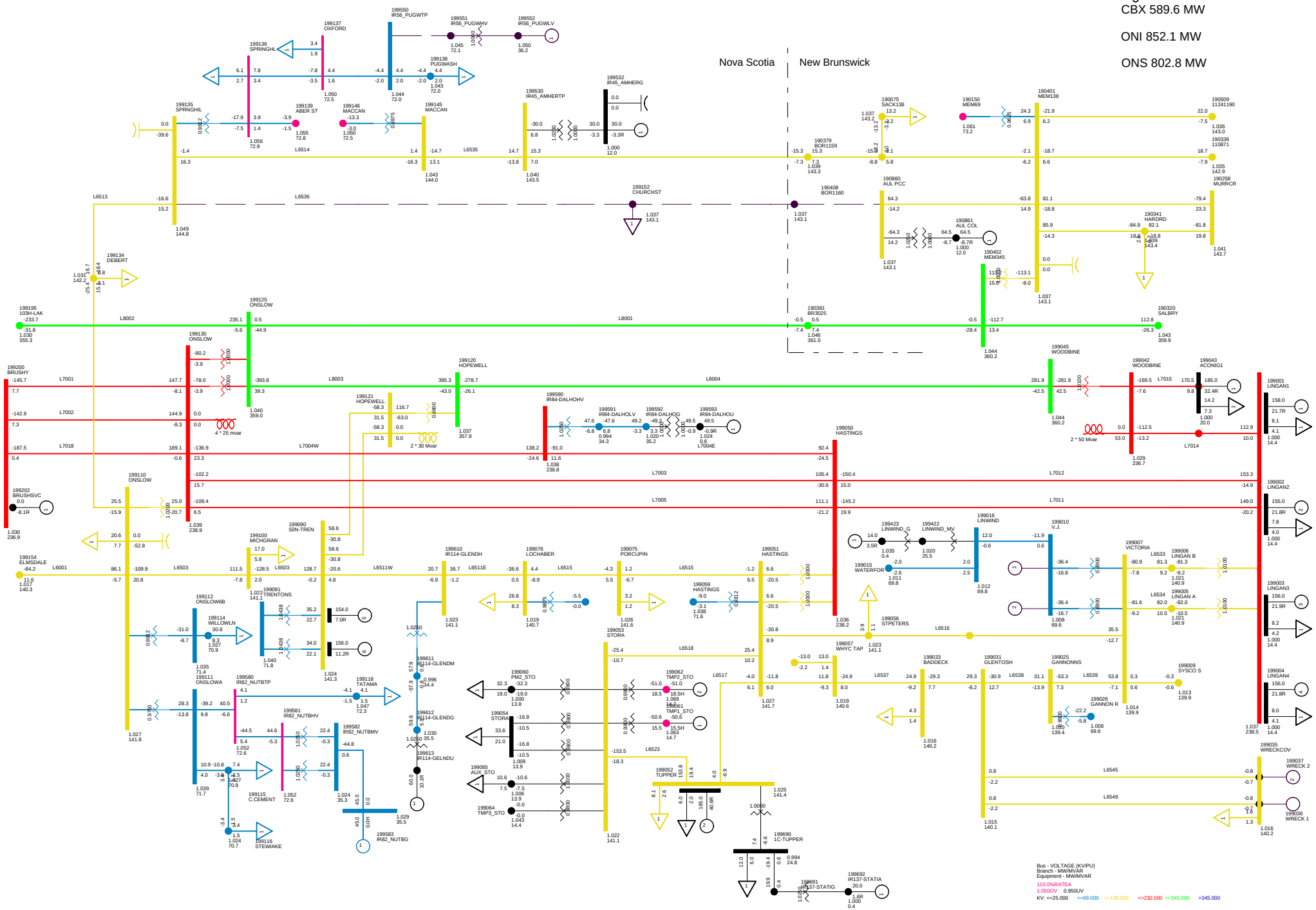

SUMMER PEAK NS-NB = 0
C17 LOSE L6536
NORTHEASTERN NS SUN, FEB 08 2009 8:26

Total Wind Gen: 105.0 MW
Gross Lingan 625.0 MW
Gross Pt Aconi 185.0 MW

Gross Tupper 165.0 MW
Gross Trenton 310.0 MW
Gross Tuft's Cove 153.2 MW

Gross Wreck Cove 0.0 MW
Gross Gas Turbine 0.0 MW
Gross Small Hydro 42.9 MW

Net Stora Load 178.9 MW
Total BMPC Load 108.5 MW

Figure ___

NSX -0.0 MW

CBX 589.6 MW

ONI 852.1 MW

ONS 802.8 MW

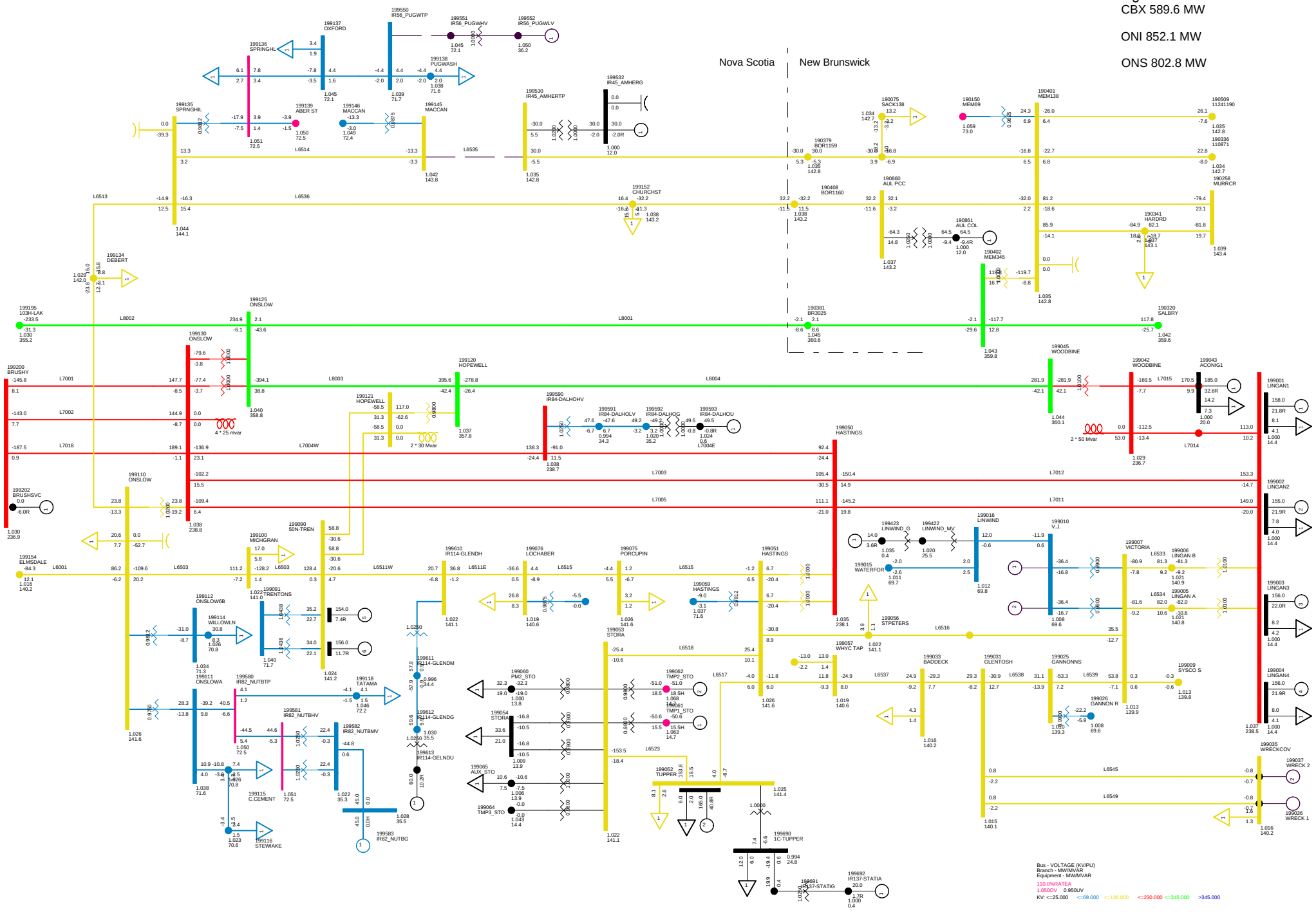

SUMMER PEAK NS-NB = 0
C18 LOSE L6535S
NORTHEASTERN NS SUN, FEB 08 2009 8:26

Total Wind Gen: 105.0 MW
Gross Lingan 625.0 MW
Gross Pt Aconi 185.0 MW

Gross Tupper 165.0 MW
Gross Trenton 310.0 MW
Gross Tuft's Cove 153.2 MW

Gross Wreck Cove 0.0 MW
Gross Gas Turbine 0.0 MW
Gross Small Hydro 42.9 MW

Net Stora Load 178.9 MW
Total BMPC Load 108.5 MW

Figure ___

NSX 0.0 MW
CBX 589.6 MW
ONI 852.2 MW
ONS 802.9 MW

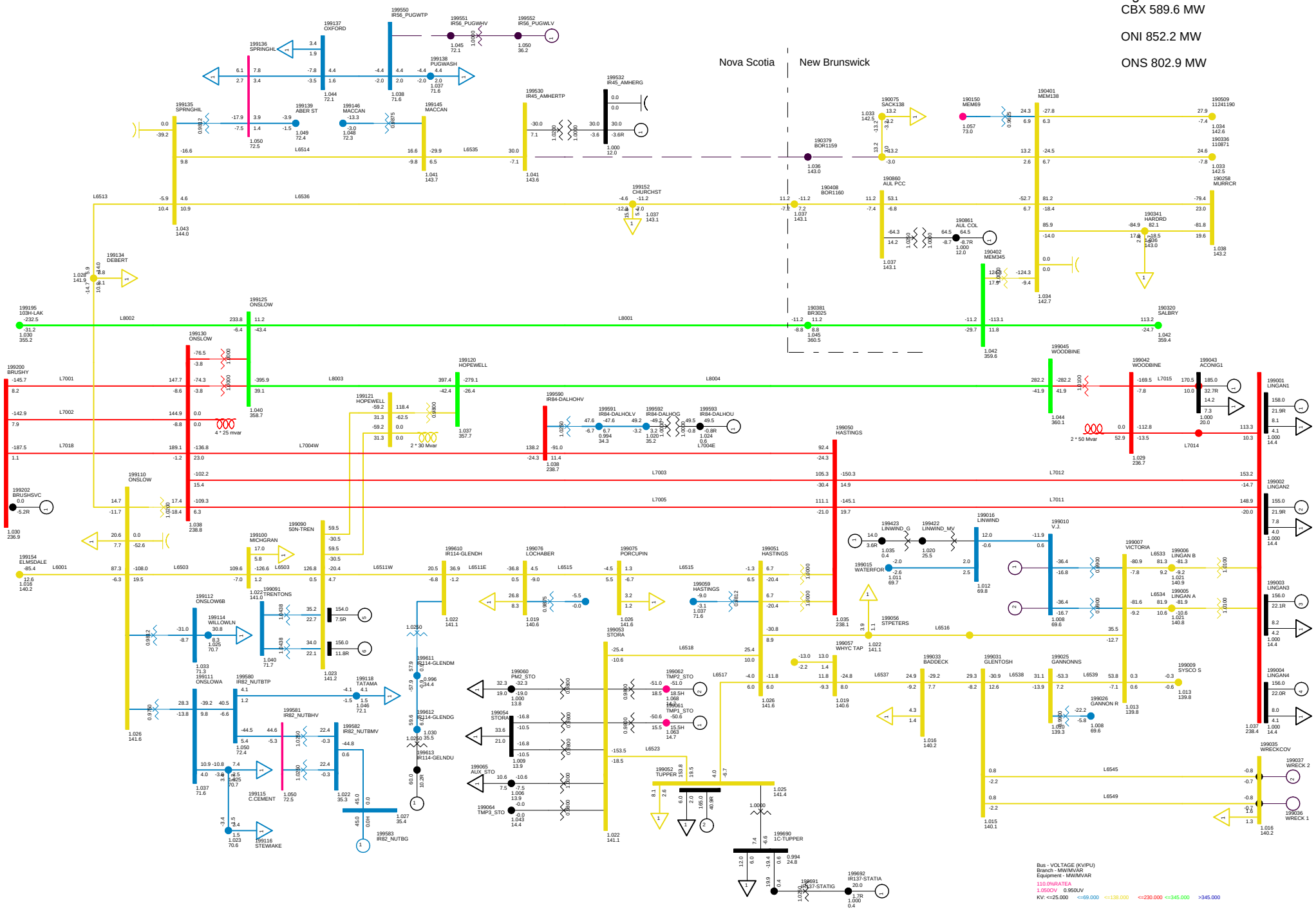

SUMMER PEAK NS-NB = 0
C19 LOSE L6535N
NORTHEASTERN NS SUN, FEB 08 2009 8:27

Total Wind Gen: 105.0 MW
Gross Lingan 625.0 MW
Gross Pt Aconi 185.0 MW

Gross Tupper 165.0 MW
Gross Trenton 310.0 MW
Gross Tuft's Cove 153.2 MW

Gross Wreck Cove 0.0 MW
Gross Gas Turbine 0.0 MW
Gross Small Hydro 42.9 MW

Net Stora Load 178.9 MW
Total BMPC Load 108.5 MW

Figure ___

NSX 16.6 MW
CBX 606.9 MW
ONI 868.8 MW
ONS 802.8 MW

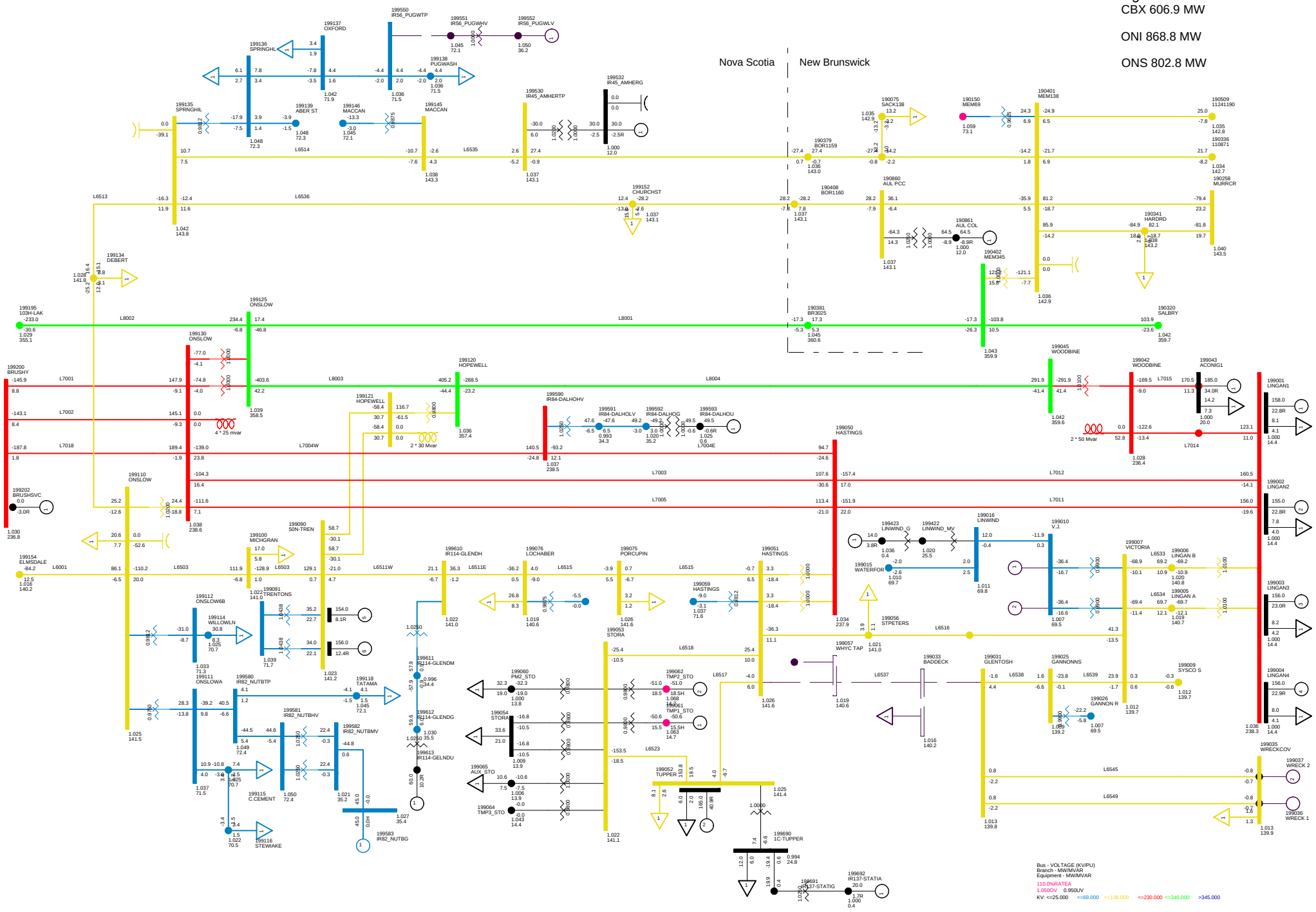

SUMMER PEAK NS-NB = 0
C20 LOSE L6537
NORTHEASTERN NS SUN, FEB 08 2009 8:27

Total Wind Gen: 105.0 MW
Gross Lingan 625.0 MW
Gross Pt Aconi 185.0 MW

Gross Tupper 165.0 MW
Gross Trenton 310.0 MW
Gross Tuft's Cove 153.2 MW

Gross Wreck Cove 0.0 MW
Gross Gas Turbine 0.0 MW
Gross Small Hydro 42.9 MW

Net Stora Load 178.9 MW
Total BMPC Load 108.5 MW

Figure ___

NSX 3.4 MW

CBX 593.1 MW

ONI 855.5 MW

ONS 802.8 MW

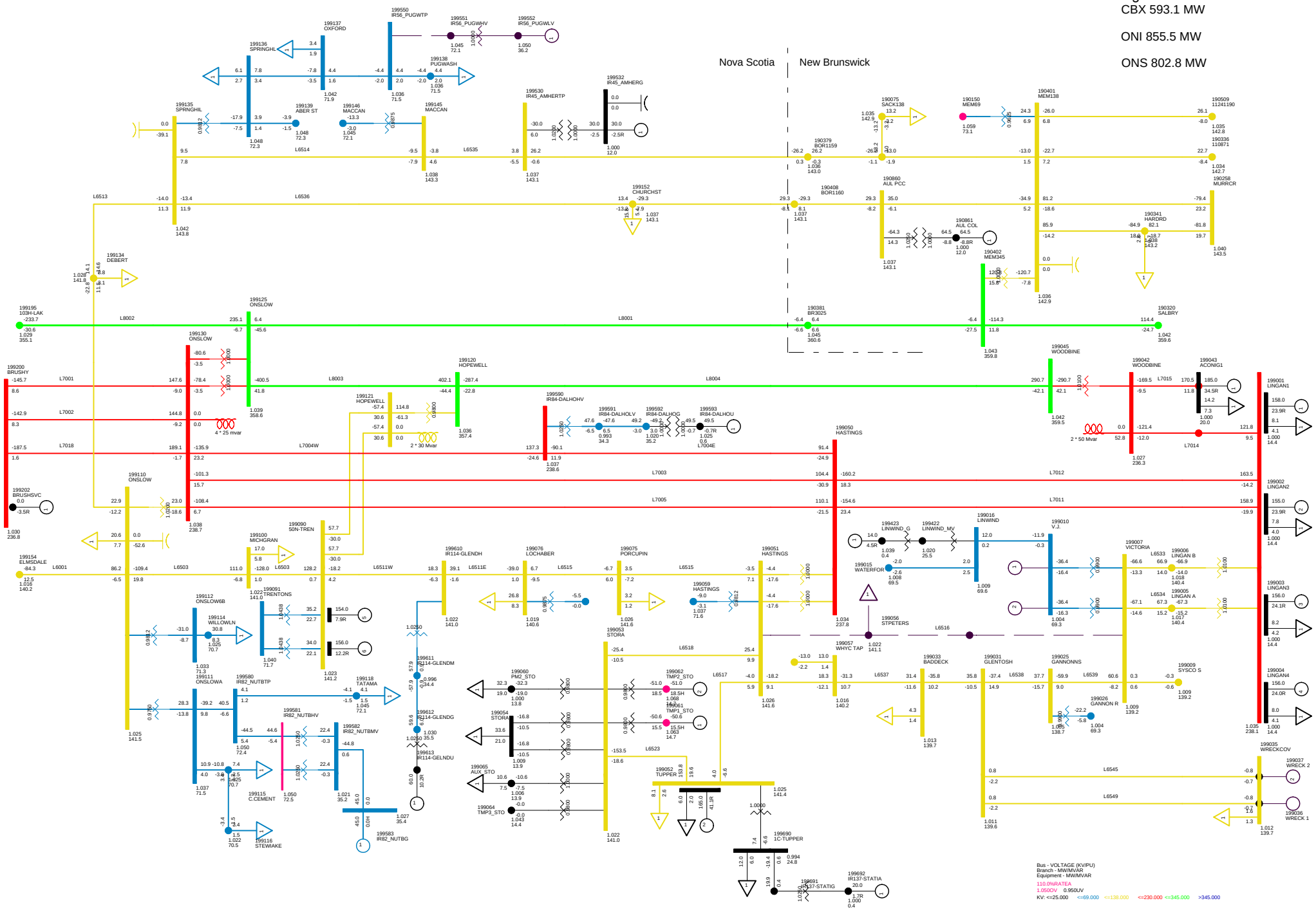

SUMMER PEAK NS-NB = 0
C21 LOSE L6516
NORTHEASTERN NS SUN, FEB 08 2009 8:27

Total Wind Gen: 105.0 MW
Gross Lingan 625.0 MW
Gross Pt Aconi 185.0 MW

Gross Tupper 165.0 MW
Gross Trenton 310.0 MW
Gross Tuft's Cove 153.2 MW

Gross Wreck Cove 0.0 MW
Gross Gas Turbine 0.0 MW
Gross Small Hydro 42.9 MW

Net Stora Load 178.9 MW
Total BMPC Load 108.5 MW

Figure ___

NSX -0.4 MW

CBX 589.2 MW

ONI 851.8 MW

ONS 802.8 MW

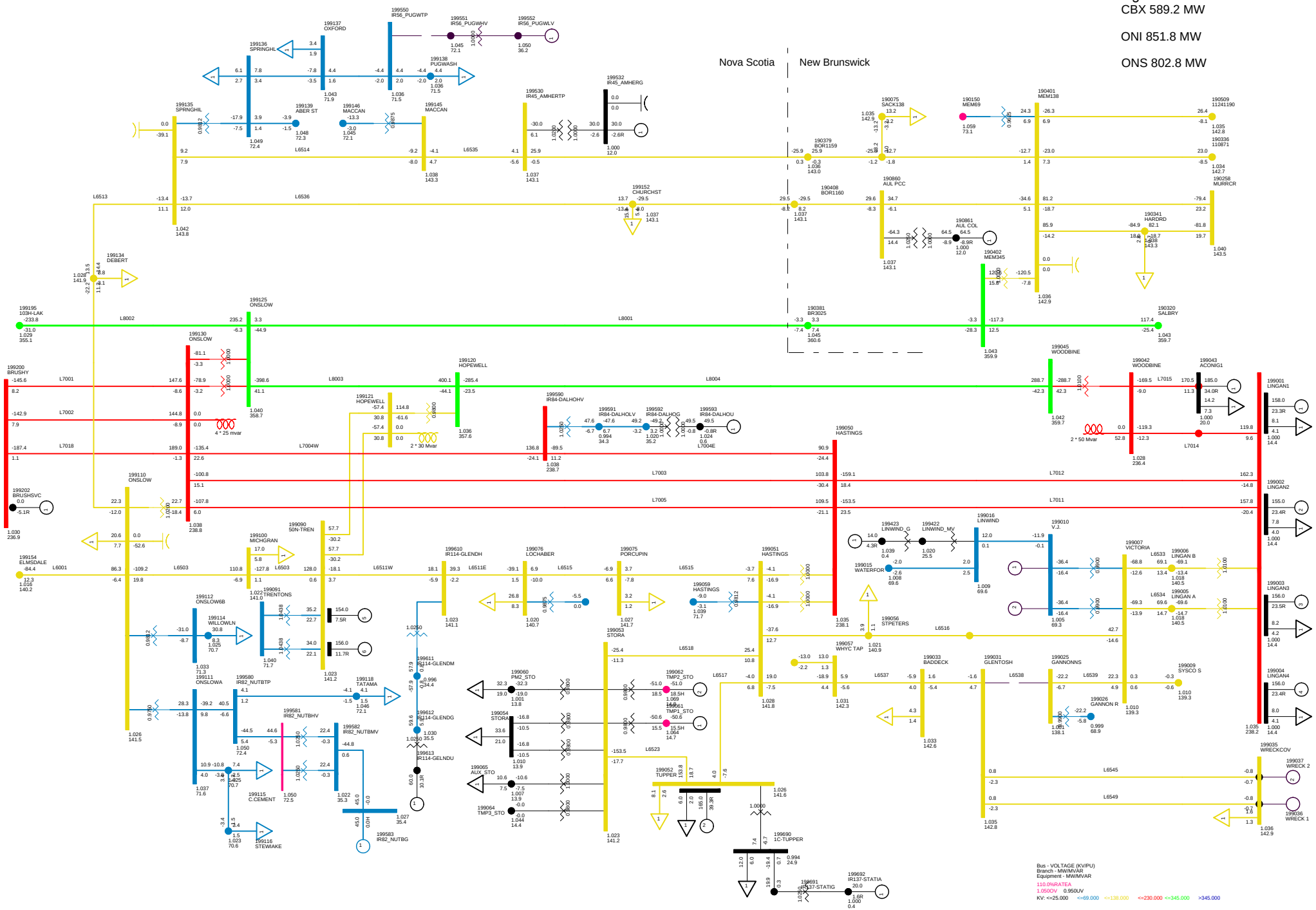

SUMMER PEAK NS-NB = 0
C22 LOSE L6538
NORTHEASTERN NS SUN, FEB 08 2009 8:27

Total Wind Gen: 105.0 MW
Gross Lingan 625.0 MW
Gross Pt Aconi 185.0 MW

Gross Tupper 165.0 MW
Gross Trenton 310.0 MW
Gross Tuft's Cove 153.2 MW

Gross Wreck Cove 0.0 MW
Gross Gas Turbine 0.0 MW
Gross Small Hydro 42.9 MW

Net Stora Load 178.9 MW
Total BMPC Load 108.5 MW

Figure ___

Total Wind Gen: 105.0 MW
Gross Tupper 165.0 MW
Gross Wreck Cove 0.0 MW
Gross Lingan 625.0 MW
Gross Trenton 310.0 MW
Gross Gas Turbine 0.0 MW
Gross Pt Aconi 185.0 MW
Gross Tuft's Cove 153.2 MW
Gross Small Hydro 42.9 MW
Net Stora Load 178.9 MW
Total BMPC Load 108.5 MW

NSX 0.0 MW
CBX 589.6 MW
ONI 852.1 MW
ONS 802.8 MW

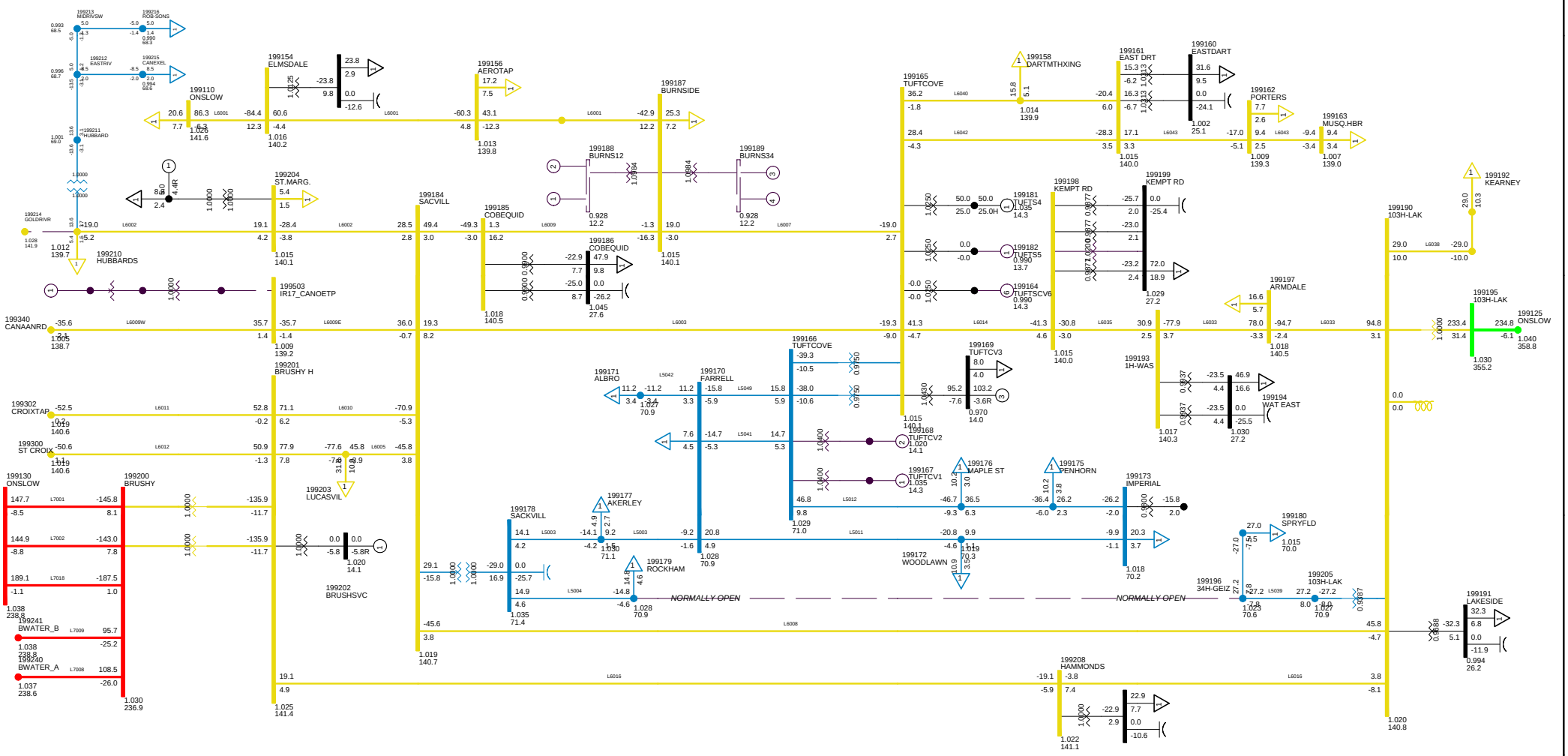

2010 SUMMER PEAK, NSLOAD=1700
NS-NB=0 NB-NE=1000; CBX=589; ONI=852 ONS=803
METRO ZONE SUN, FEB 08 2009 8:27

Bus - VOLTAGE (KV/PU)
Branch - MW/MVAR
Equipment - MW/MVAR
100.0%RATEA
1.050OV 0.950UV
KV: <=30.000 <=69.000 <=138.000 <=230.000 <=345.000 >345.000

Figure __

Total Wind Gen: 105.0 MW
Gross Tupper 165.0 MW
Gross Wreck Cove 0.0 MW
Gross Lingan 625.0 MW
Gross Trenton 310.0 MW
Gross Gas Turbine 0.0 MW
Gross Pt Aconi 185.0 MW
Gross Tuft's Cove 153.2 MW
Gross Small Hydro 42.9 MW
Net Stora Load 178.9 MW
Total BMPC Load 108.5 MW

NSX -0.1 MW
CBX 589.6 MW
ONI 852.1 MW
ONS 802.9 MW

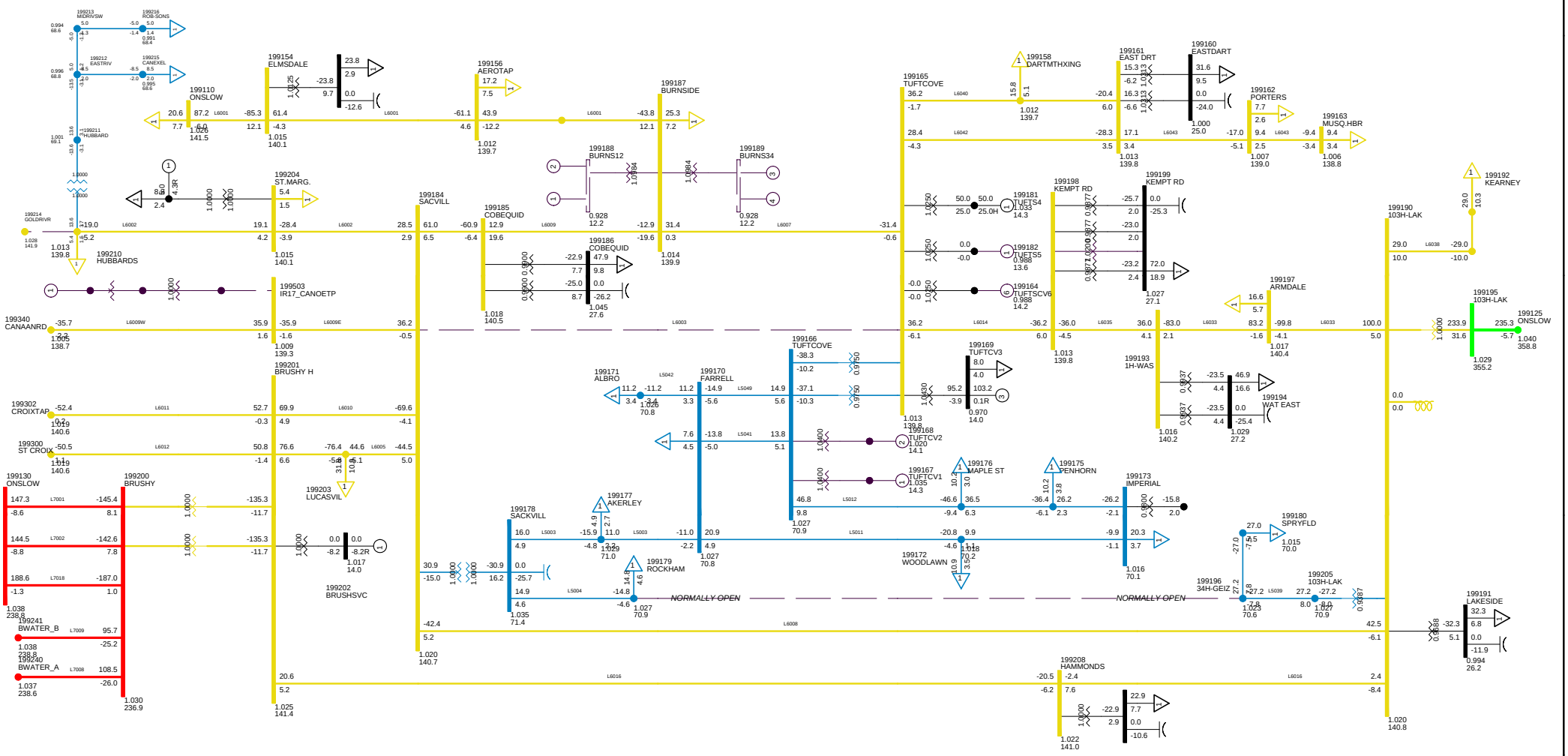

SUMMER PEAK NS-NB = 0
C23 LOSE L6003
METRO ZONE SUN, FEB 08 2009 8:27

Bus - VOLTAGE (KV/PU)
Branch - MW/MVAR
Equipment - MW/MVAR
100.0%RATEA
1.050OV 0.950UV
KV: <=30.000 <=69.000 <=138.000 <=230.000 <=345.000 >345.000

Figure __

Total Wind Gen: 105.0 MW
Gross Tupper 165.0 MW
Gross Wreck Cove 0.0 MW
Gross Lingan 625.0 MW
Gross Trenton 310.0 MW
Gross Gas Turbine 0.0 MW
Gross Pt Aconi 185.0 MW
Gross Tuft's Cove 153.2 MW
Gross Small Hydro 42.9 MW
Net Stora Load 178.9 MW
Total BMPC Load 108.5 MW

NSX 32.5 MW
CBX 589.7 MW
ONI 852.2 MW
ONS 770.4 MW

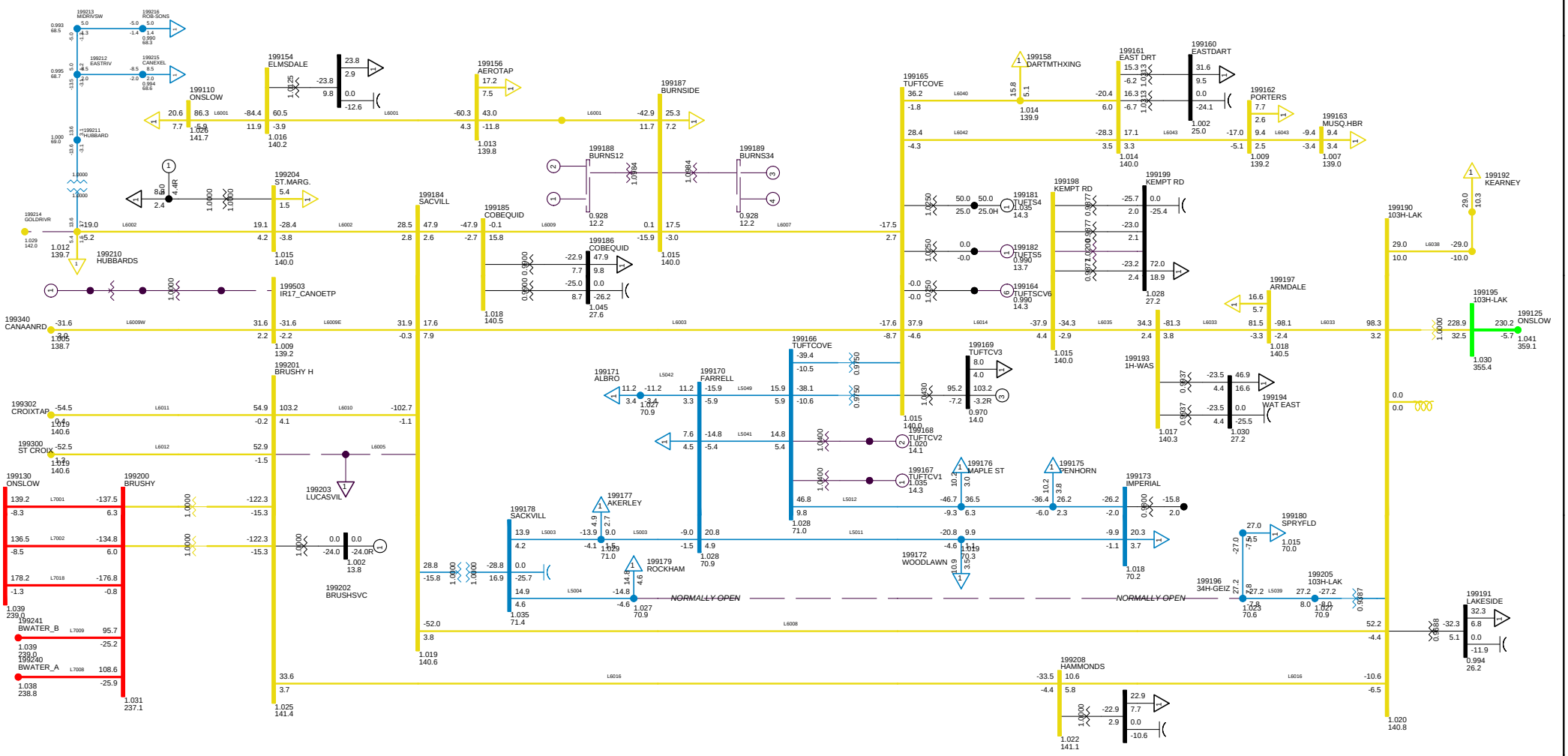

SUMMER PEAK NS-NB = 0
C24 LOSE L6005
METRO ZONE SUN, FEB 08 2009 8:27

Bus - VOLTAGE (KV/PU)
Branch - MW/MVAR
Equipment - MW/MVAR
100.0%RATEA
1.050OV 0.950UV
KV: <=30.000 <=69.000 <=138.000 <=230.000 <=345.000 >345.000

Figure __

Total Wind Gen: 105.0 MW
Gross Tupper 165.0 MW
Gross Wreck Cove 0.0 MW
Gross Lingan 625.0 MW
Gross Trenton 310.0 MW
Gross Gas Turbine 0.0 MW
Gross Pt Aconi 185.0 MW
Gross Tuft's Cove 153.2 MW
Gross Small Hydro 42.9 MW
Net Stora Load 178.9 MW
Total BMPC Load 108.5 MW

NSX 0.0 MW
CBX 589.6 MW
ONI 852.1 MW
ONS 802.8 MW

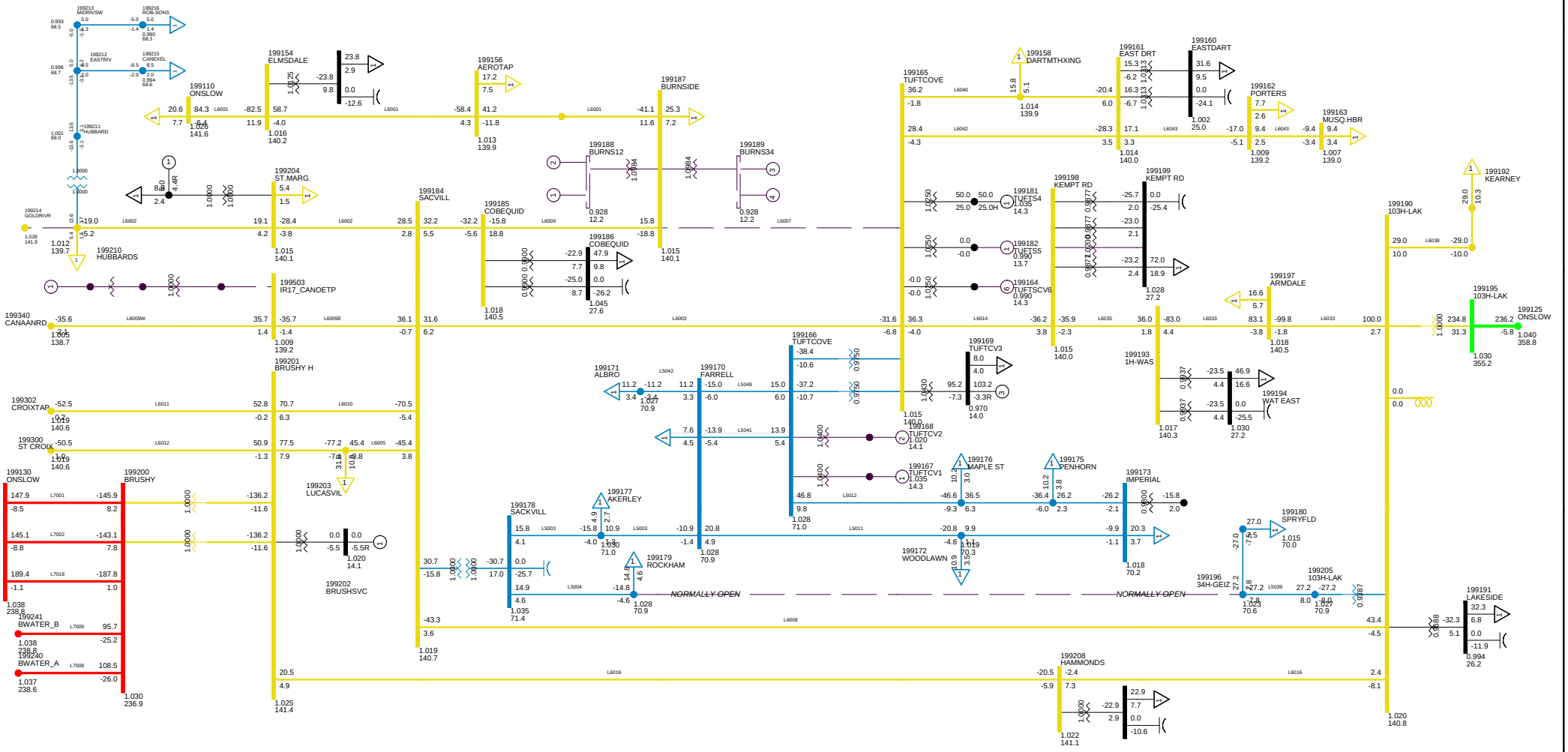

SUMMER PEAK NS-NB = 0
C25 LOSE L6007
METRO ZONE SUN, FEB 08 2009 8:28

Bus - VOLTAGE (KV/PU)
Branch - MW/MVAR
Equipment - MW/MVAR
100.0%RATEA
1.050OV 0.950UV
KV: <=30.000 <=69.000 <=138.000 <=230.000 <=345.000 >345.000

Figure __

Total Wind Gen: 105.0 MW
Gross Tupper 165.0 MW
Gross Wreck Cove 0.0 MW
Gross Lingan 625.0 MW
Gross Trenton 310.0 MW
Gross Gas Turbine 0.0 MW
Gross Pt Aconi 185.0 MW
Gross Tuft's Cove 153.2 MW
Gross Small Hydro 42.9 MW
Net Stora Load 178.9 MW
Total BMPC Load 108.5 MW

NSX -0.4 MW
CBX 589.6 MW
ONI 852.1 MW
ONS 803.2 MW

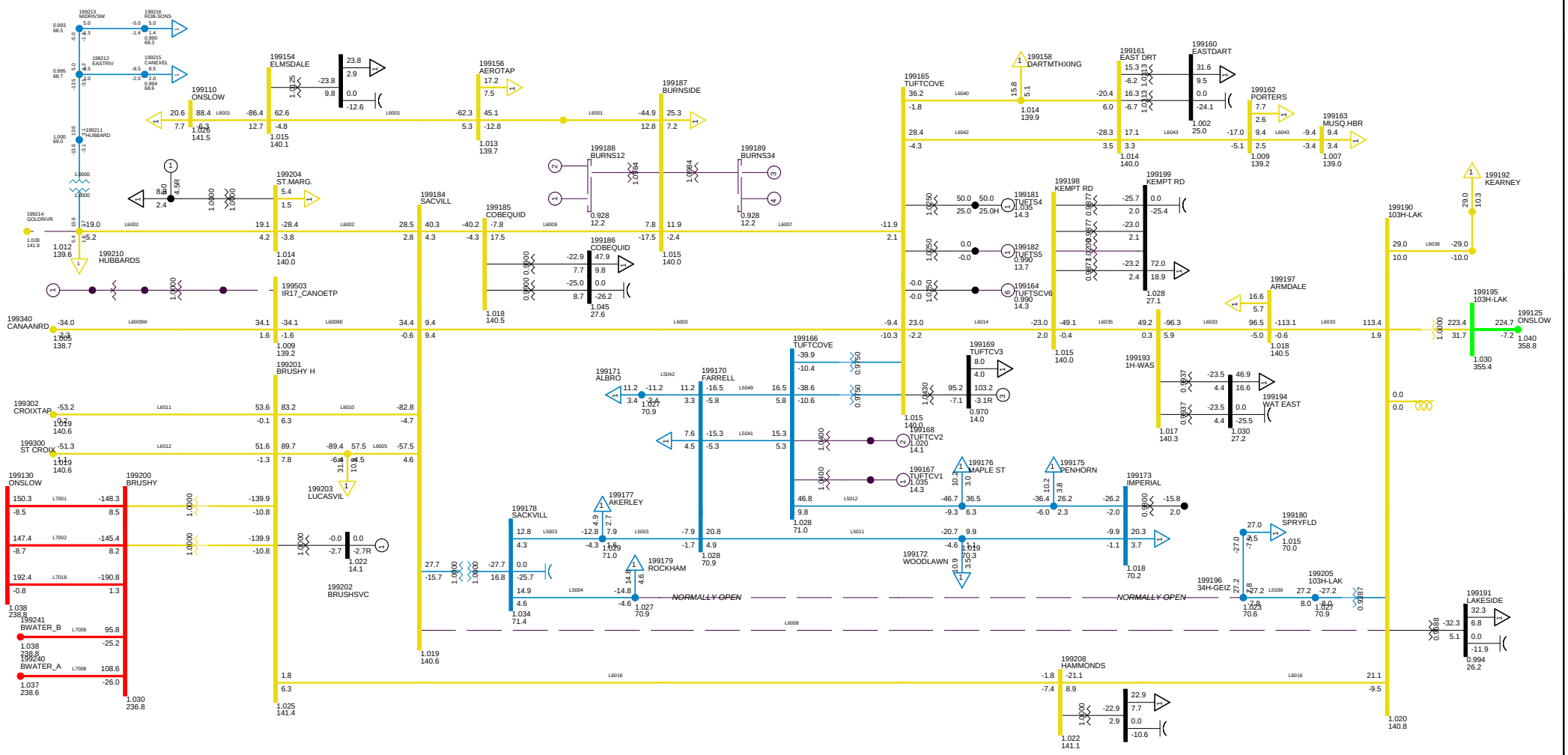

SUMMER PEAK NS-NB = 0
C26 LOSE L6008
METRO ZONE SUN, FEB 08 2009 8:28

Bus - VOLTAGE (KV/PU)
Branch - MW/MVAR
Equipment - MW/MVAR
100.0%RATEA
1.050OV 0.950UV
KV: <=30.000 <=69.000 <=138.000 <=230.000 <=345.000 >345.000

Figure __

Total Wind Gen: 105.0 MW
Gross Tupper 165.0 MW
Gross Wreck Cove 0.0 MW
Gross Lingan 625.0 MW
Gross Trenton 310.0 MW
Gross Gas Turbine 0.0 MW
Gross Pt Aconi 185.0 MW
Gross Tuft's Cove 153.2 MW
Gross Small Hydro 42.9 MW
Net Stora Load 178.9 MW
Total BMPC Load 108.5 MW

NSX 23.5 MW
CBX 589.7 MW
ONI 852.2 MW
ONS 779.4 MW

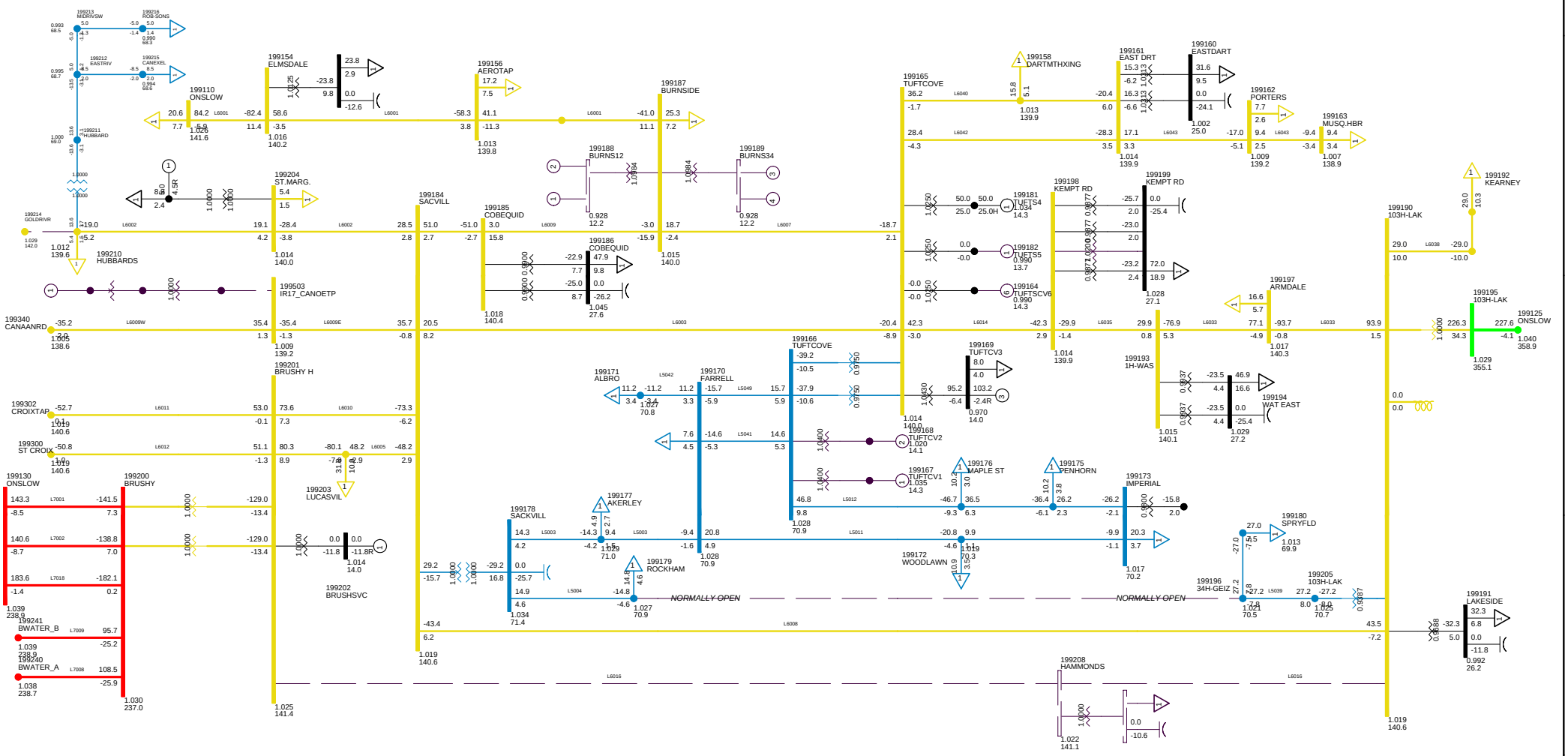

SUMMER PEAK NS-NB = 0
C27 LOSE L6009
METRO ZONE SUN, FEB 08 2009 8:28

Bus - VOLTAGE (KV/PU)
Branch - MW/MVAR
Equipment - MW/MVAR
100.0%RATEA
1.050OV 0.950UV
KV: <=30.000 <=69.000 <=138.000 <=230.000 <=345.000 >345.000

Figure __

Total Wind Gen: 105.0 MW
Gross Tupper 165.0 MW
Gross Wreck Cove 0.0 MW
Gross Lingan 625.0 MW
Gross Trenton 310.0 MW
Gross Gas Turbine 0.0 MW
Gross Pt Aconi 185.0 MW
Gross Tuft's Cove 153.2 MW
Gross Small Hydro 42.9 MW
Net Stora Load 178.9 MW
Total BMPC Load 108.5 MW

NSX -0.5 MW
CBX 589.6 MW
ONI 852.1 MW
ONS 803.3 MW

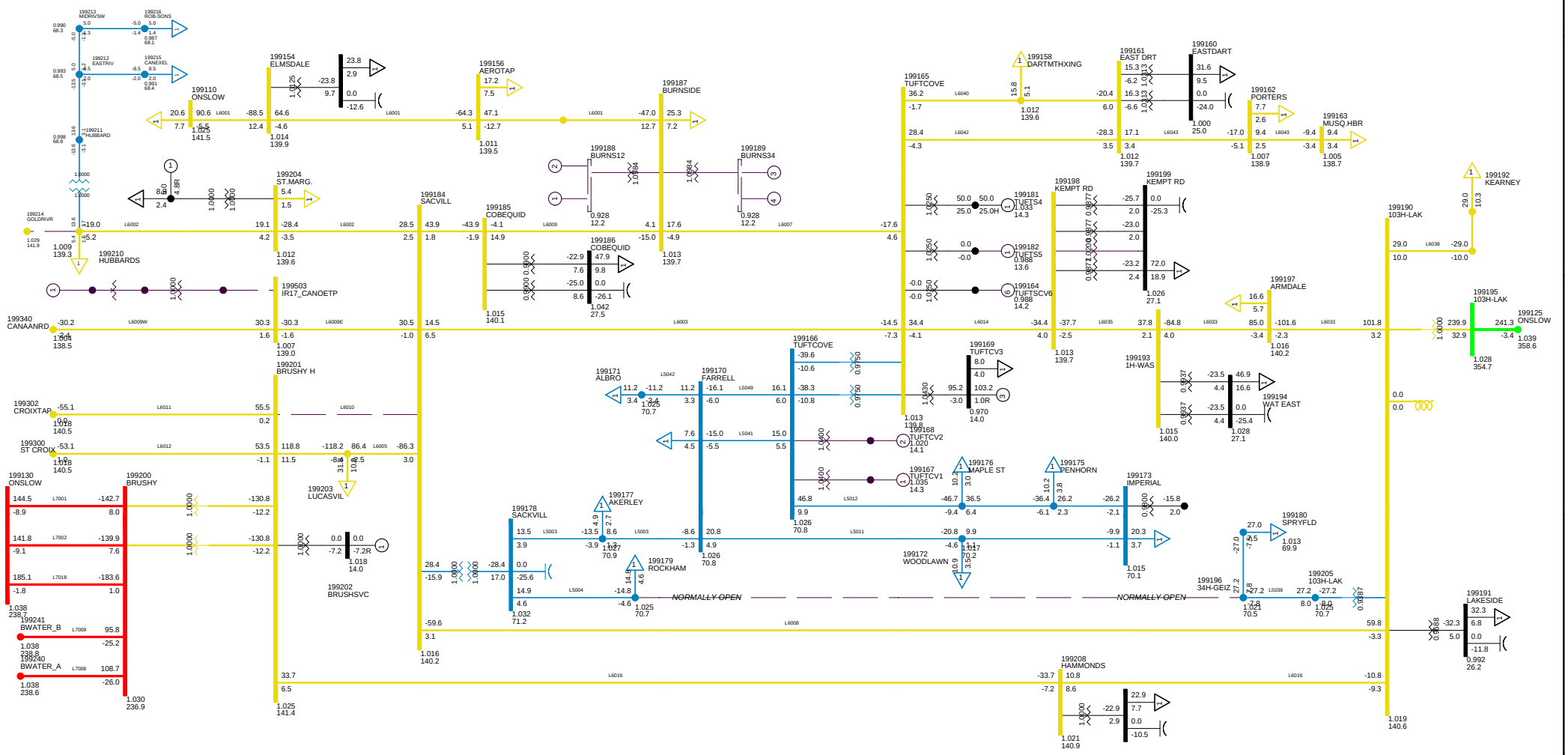

SUMMER PEAK NS-NB = 0
C28 LOSE L6010
METRO ZONE SUN, FEB 08 2009 8:28

Bus - VOLTAGE (KV/PU)
Branch - MW/MVAR
Equipment - MW/MVAR
100.0%RATEA
1.050OV 0.950UV
KV: <=30.000 <=69.000 <=138.000 <=230.000 <=345.000 >345.000

Figure __

Total Wind Gen: 105.0 MW
Gross Tupper 165.0 MW
Gross Wreck Cove 0.0 MW
Gross Lingan 625.0 MW
Gross Trenton 310.0 MW
Gross Gas Turbine 0.0 MW
Gross Pt Aconi 185.0 MW
Gross Tuft's Cove 153.2 MW
Gross Small Hydro 42.9 MW
Net Stora Load 178.9 MW
Total BMPC Load 108.5 MW

NSX -0.1 MW
CBX 589.6 MW
ONI 852.2 MW
ONS 802.9 MW

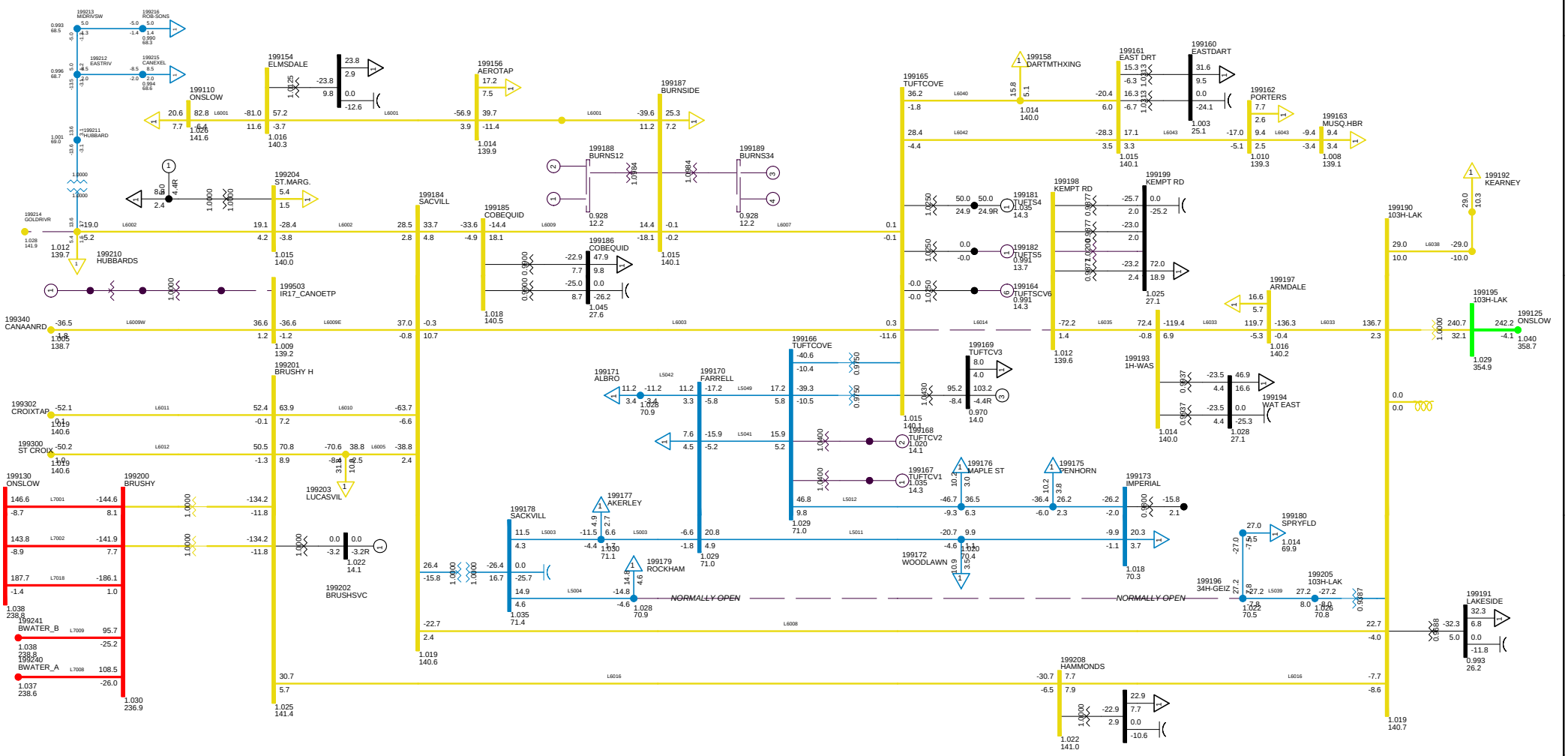

SUMMER PEAK NS-NB = 0
C29 LOSE L6014
METRO ZONE SUN, FEB 08 2009 8:28

Bus - VOLTAGE (KV/PU)
Branch - MW/MVAR
Equipment - MW/MVAR
100.0%RATEA
1.050OV 0.950UV
KV: <=30.000 <=69.000 <=138.000 <=230.000 <=345.000 >345.000

Figure __

Total Wind Gen: 105.0 MW
Gross Tupper 165.0 MW
Gross Wreck Cove 0.0 MW
Gross Lingan 625.0 MW
Gross Trenton 310.0 MW
Gross Gas Turbine 0.0 MW
Gross Pt Aconi 185.0 MW
Gross Tuft's Cove 153.2 MW
Gross Small Hydro 42.9 MW
Net Stora Load 178.9 MW
Total BMPC Load 108.5 MW

NSX 23.5 MW
CBX 589.7 MW
ONI 852.2 MW
ONS 779.4 MW

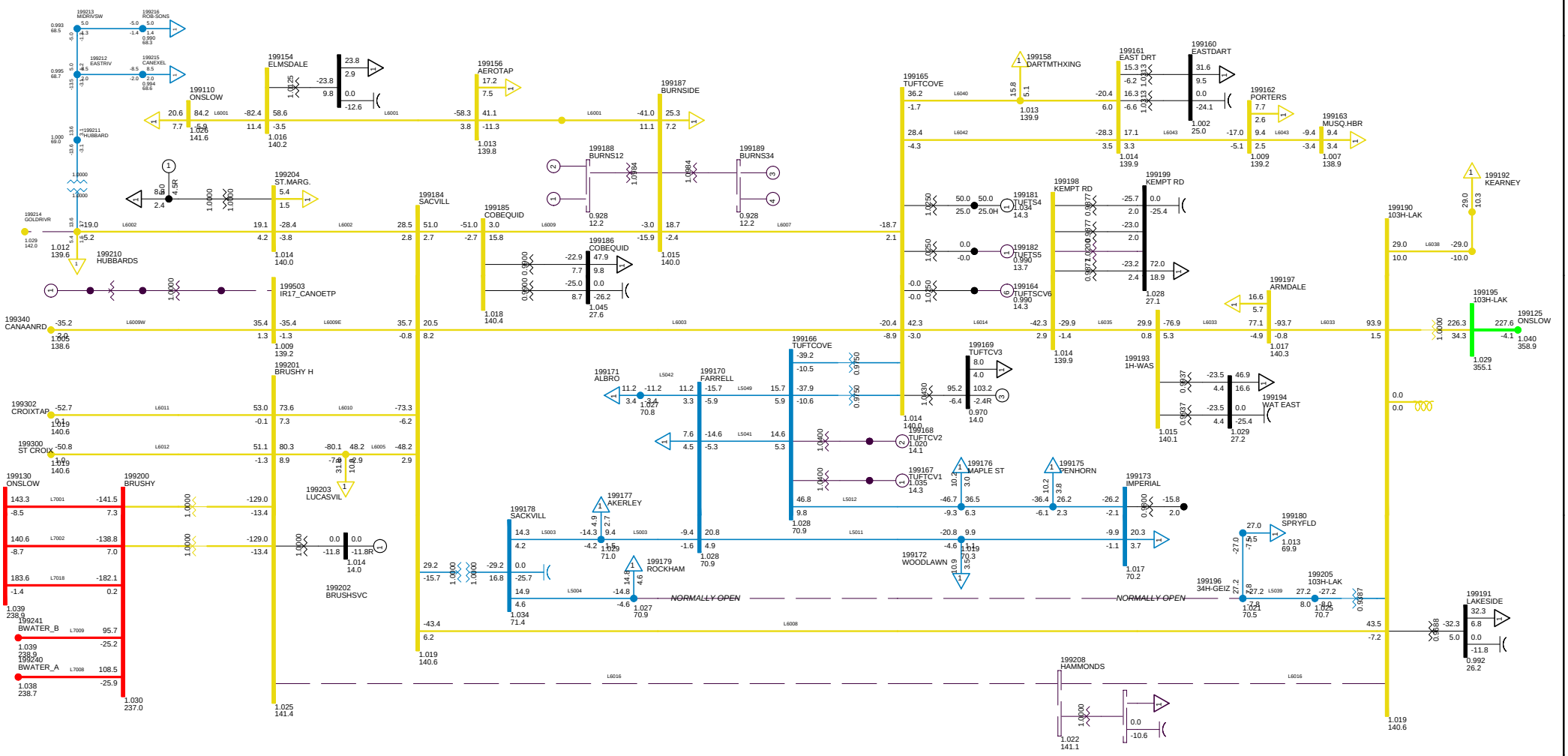

SUMMER PEAK NS-NB = 0
C30 LOSE L6016
METRO ZONE SUN, FEB 08 2009 8:28

Bus - VOLTAGE (KV/PU)
Branch - MW/MVAR
Equipment - MW/MVAR
100.0%RATEA
1.050OV 0.950UV
KV: <=30.000 <=69.000 <=138.000 <=230.000 <=345.000 >345.000

Figure __

Total Wind Gen: 105.0 MW
Gross Tupper 165.0 MW
Gross Wreck Cove 0.0 MW
Gross Lingan 625.0 MW
Gross Trenton 310.0 MW
Gross Gas Turbine 0.0 MW
Gross Pt Aconi 185.0 MW
Gross Tuft's Cove 153.2 MW
Gross Small Hydro 42.9 MW
Net Stora Load 178.9 MW
Total BMPC Load 108.5 MW

NSX 39.0 MW
CBX 589.6 MW
ONI 852.1 MW
ONS 763.8 MW

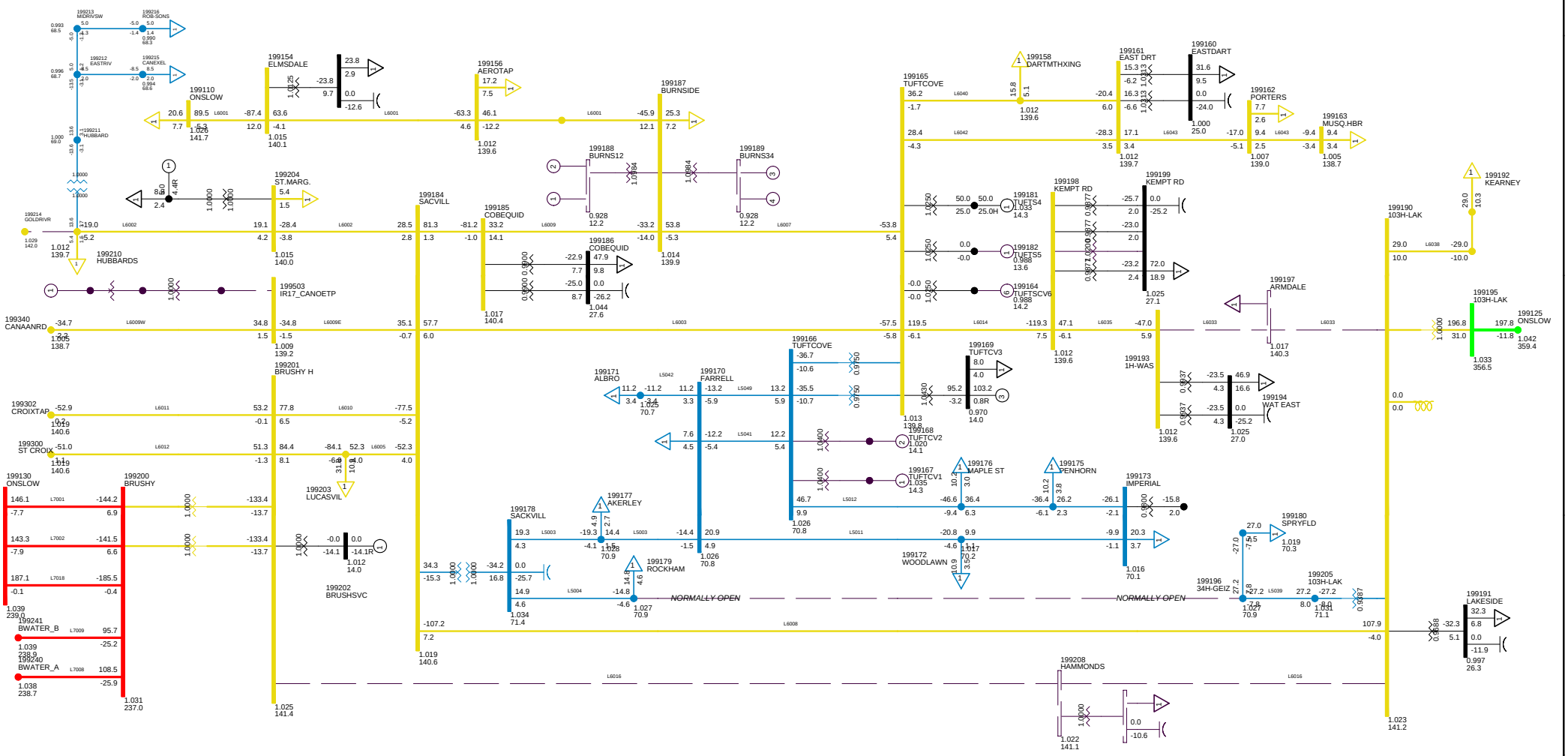

SUMMER PEAK NS-NB = 0
C31 LOSE L6033
METRO ZONE SUN, FEB 08 2009 8:28

Bus - VOLTAGE (KV/PU)
Branch - MW/MVAR
Equipment - MW/MVAR
100.0%RATEA
1.050OV 0.950UV
KV: <=30.000 <=69.000 <=138.000 <=230.000 <=345.000 >345.000

Figure __

Total Wind Gen: 105.0 MW | Gross Tupper 165.0 MW | Gross Wreck Cove 0.0 MW

Gross Lingan 625.0 MW | Gross Trenton 310.0 MW | Gross Gas Turbine 0.0 MW

Gross Pt Aconi 185.0 MW | Gross Tuft's Cove 153.2 MW | Gross Small Hydro 42.9 MW

Net Stora Load 178.9 MW | Total BMPC Load 108.5 MW

NSX -0.3 MW

CBX 589.6 MW

ONI 852.1 MW

ONS 803.1 MW

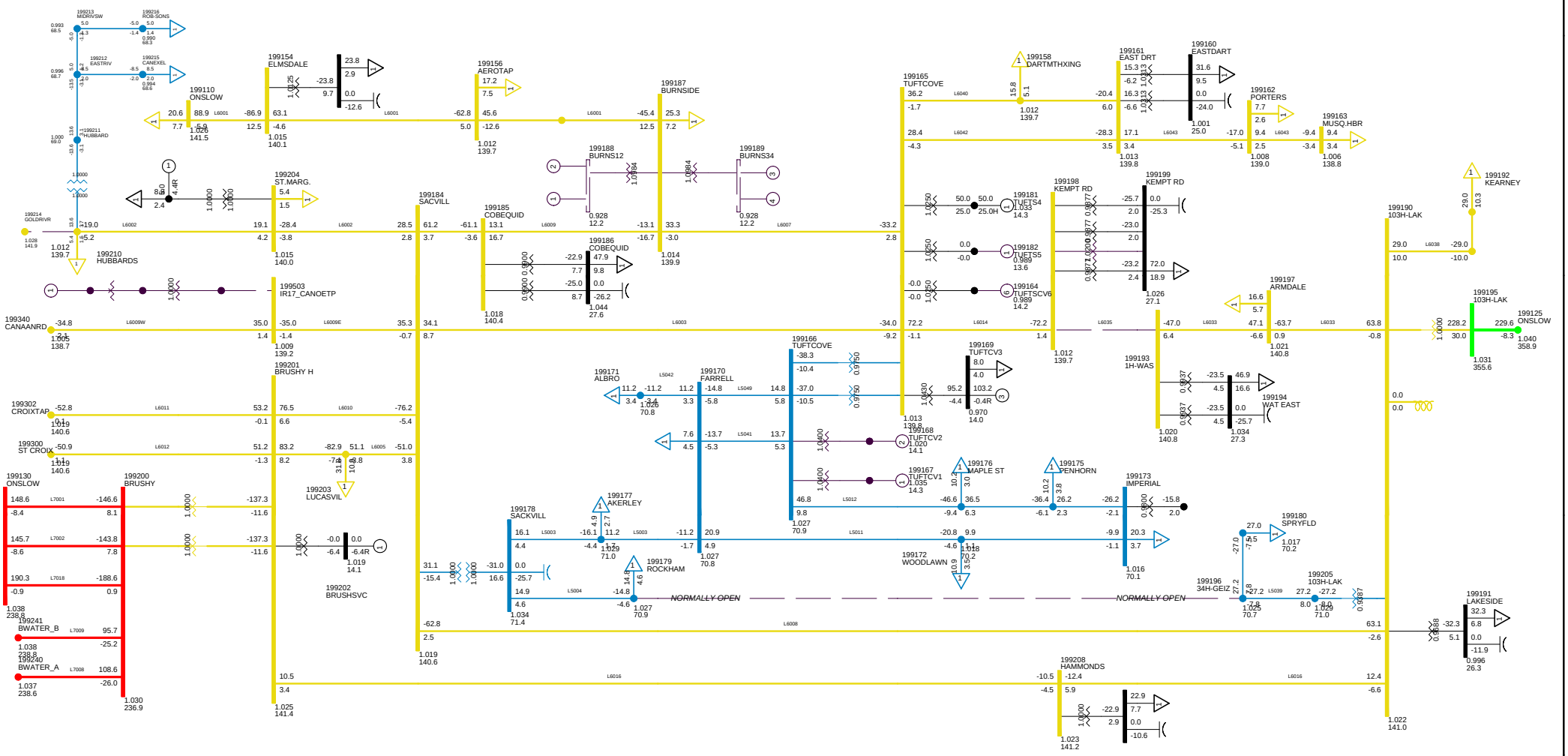

SUMMER PEAK NS-NB = 0
C32 LOSE L6035
METRO ZONE SUN, FEB 08 2009 8:29

Bus - VOLTAGE (KV/PU)
Branch - MW/MVAR
Equipment - MW/MVAR
100.0%RATEA
1.050OV 0.950UV
KV: <=30.000 <=69.000 <=138.000 <=230.000 <=345.000 >345.000

Figure __

Total Wind Gen: 105.0 MW
Gross Tupper 165.0 MW
Gross Wreck Cove 0.0 MW
Gross Lingan 625.0 MW
Gross Trenton 310.0 MW
Gross Gas Turbine 0.0 MW
Gross Pt Aconi 185.0 MW
Gross Tuft's Cove 153.2 MW
Gross Small Hydro 42.9 MW
Net Stora Load 178.9 MW
Total BMPC Load 108.5 MW

NSX 18.4 MW
CBX 589.3 MW
ONI 851.4 MW
ONS 783.5 MW

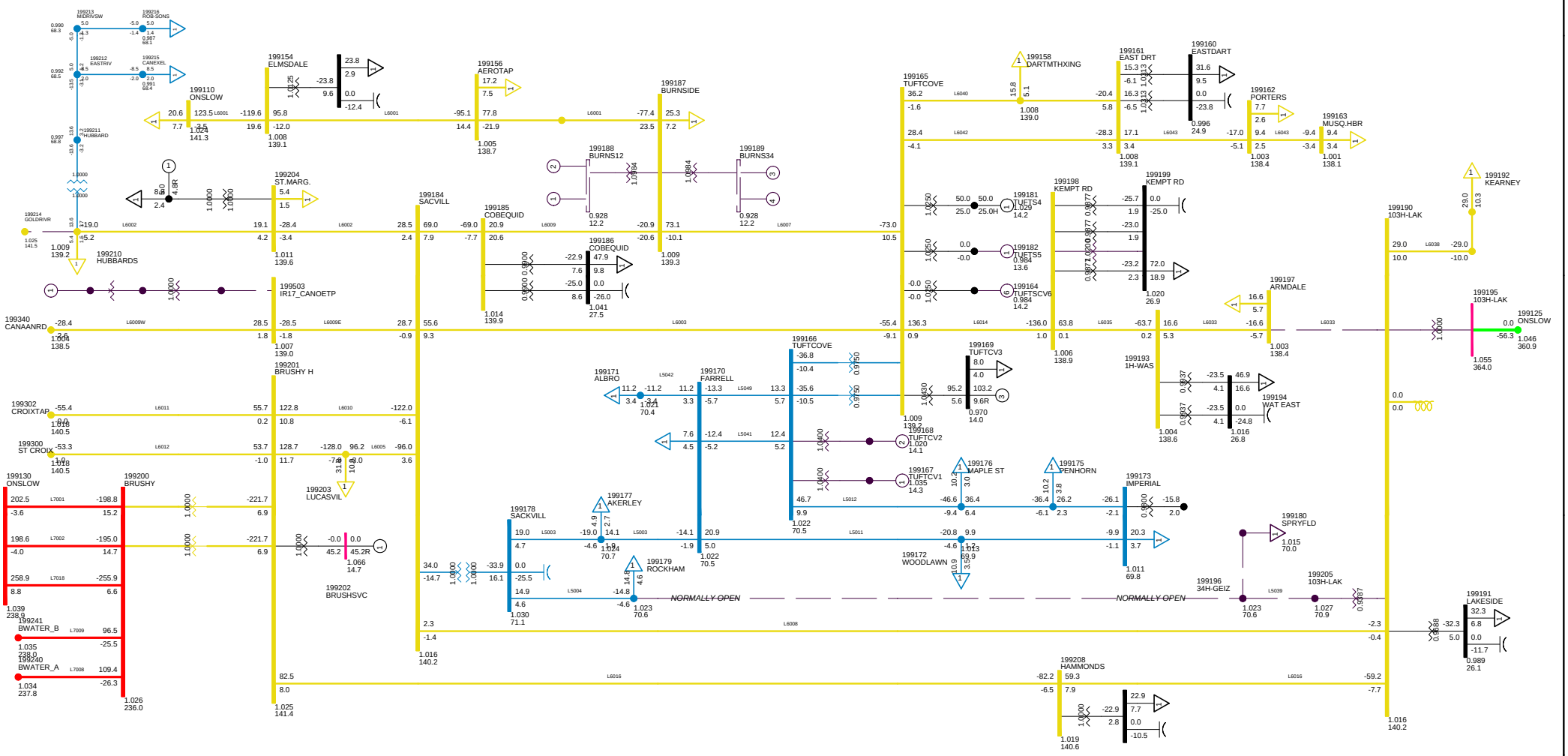

SUMMER PEAK NS-NB = 0
C33 LOSE 103H-B61
METRO ZONE SUN, FEB 08 2009 8:29

Bus - VOLTAGE (KV/PU)
Branch - MW/MVAR
Equipment - MW/MVAR
100.0%RATEA
1.050OV 0.950UV
KV: <=30.000 <=69.000 <=138.000 <=230.000 <=345.000 >345.000

Figure __

Total Wind Gen: 105.0 MW
Gross Tupper 165.0 MW
Gross Wreck Cove 0.0 MW
Gross Lingan 625.0 MW
Gross Trenton 310.0 MW
Gross Gas Turbine 0.0 MW
Gross Pt Aconi 185.0 MW
Gross Tuft's Cove 103.2 MW
Gross Small Hydro 42.9 MW
Net Stora Load 178.9 MW
Total BMPC Load 108.5 MW

NSX -30.7 MW
CBX 589.3 MW
ONI 851.4 MW
ONS 832.6 MW

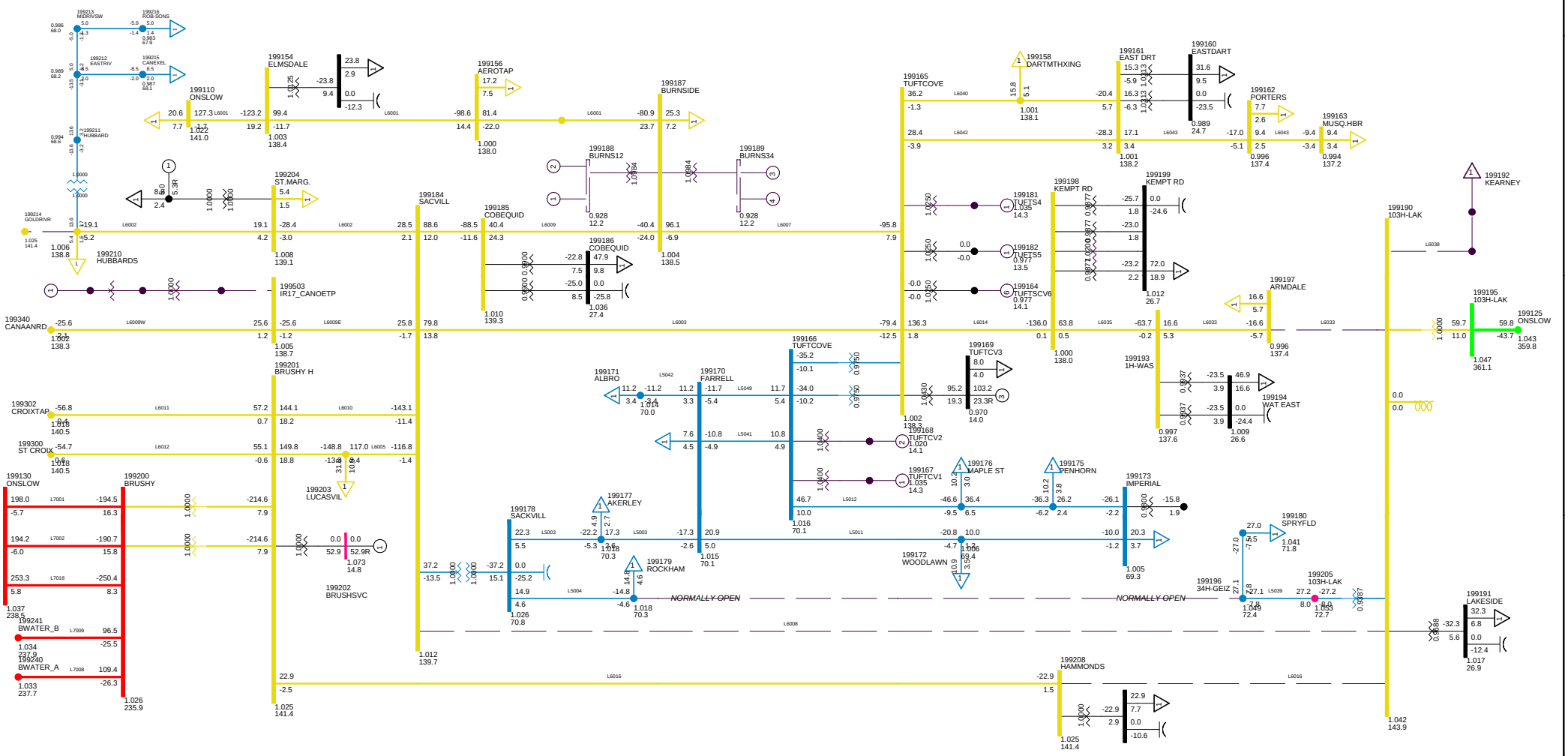

SUMMER PEAK NS-NB = 0
C34 LOSE 103H-B62
METRO ZONE SUN, FEB 08 2009 8:29

Bus - VOLTAGE (KV/PU)
Branch - MW/MVAR
Equipment - MW/MVAR
100.0%RATEA
1.050OV 0.950UV
KV: <=30.000 <=69.000 <=138.000 <=230.000 <=345.000 >345.000

Figure __

Total Wind Gen: 105.0 MW
Gross Tupper 165.0 MW
Gross Wreck Cove 0.0 MW
Gross Lingan 625.0 MW
Gross Trenton 310.0 MW
Gross Gas Turbine 0.0 MW
Gross Pt Aconi 185.0 MW
Gross Tuft's Cove 153.2 MW
Gross Small Hydro 42.9 MW
Net Stora Load 178.9 MW
Total BMPC Load 108.5 MW

NSX 0.0 MW
CBX 589.6 MW
ONI 852.1 MW
ONS 802.8 MW

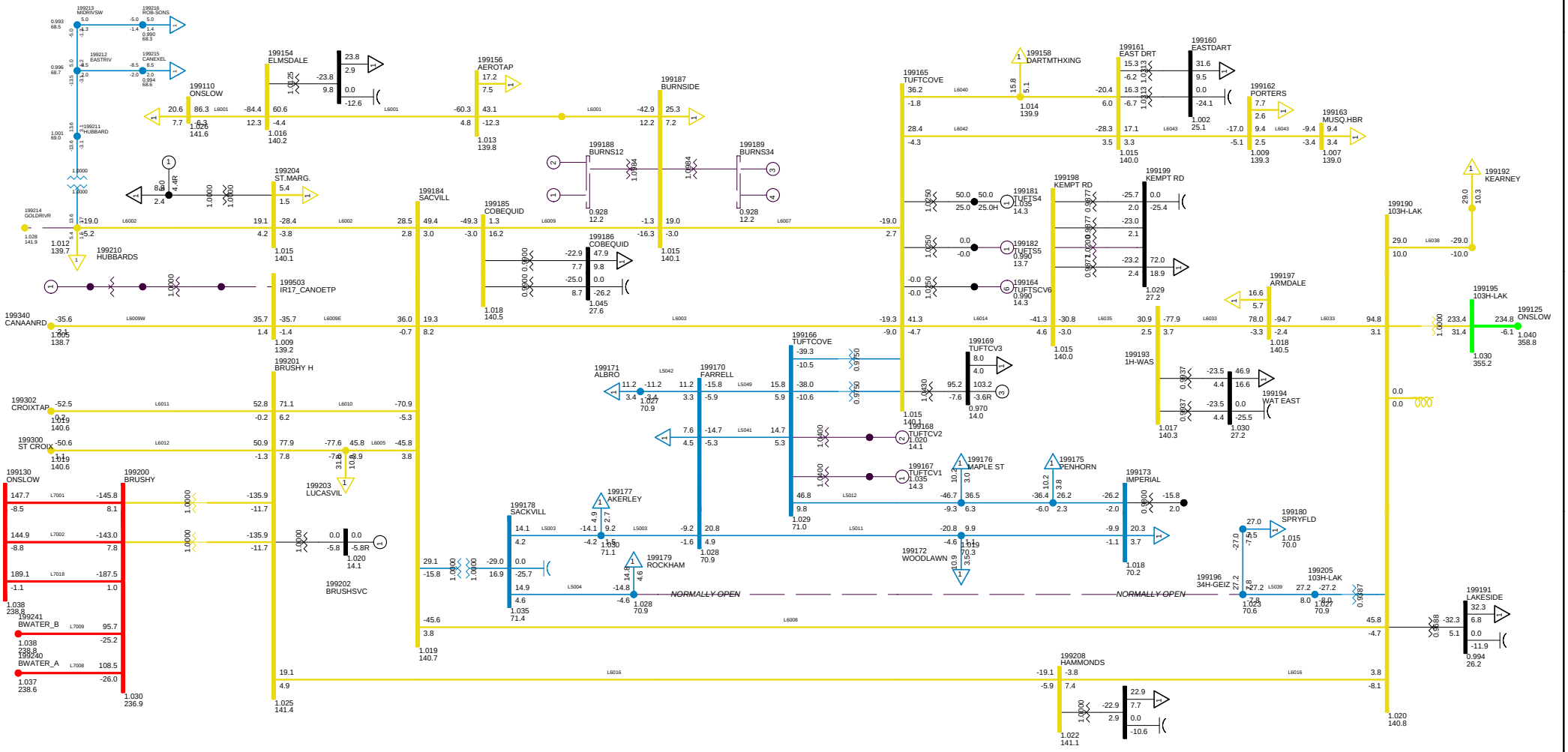

2010 SUMMER PEAK, NSLOAD=1700
NS-NB=0 NB-NE=1000; CBX=589; ONI=852 ONS=803
METRO ZONE SUN, FEB 08 2009 8:29

Bus - VOLTAGE (KV/PU)
Branch - MW/MVAR
Equipment - MW/MVAR
100.0%RATEA
1.050OV 0.950UV
KV: <=30.000 <=69.000 <=138.000 <=230.000 <=345.000 >345.000

Figure __

Total Wind Gen: 105.0 MW
Gross Tupper 165.0 MW
Gross Wreck Cove 0.0 MW
Gross Lingan 625.0 MW
Gross Trenton 310.0 MW
Gross Gas Turbine 0.0 MW
Gross Pt Aconi 185.0 MW
Gross Tuft's Cove 153.2 MW
Gross Small Hydro 42.9 MW
Net Stora Load 178.9 MW
Total BMPC Load 108.5 MW

NSX 31.2 MW
CBX 589.7 MW
ONI 852.3 MW
ONS 771.7 MW

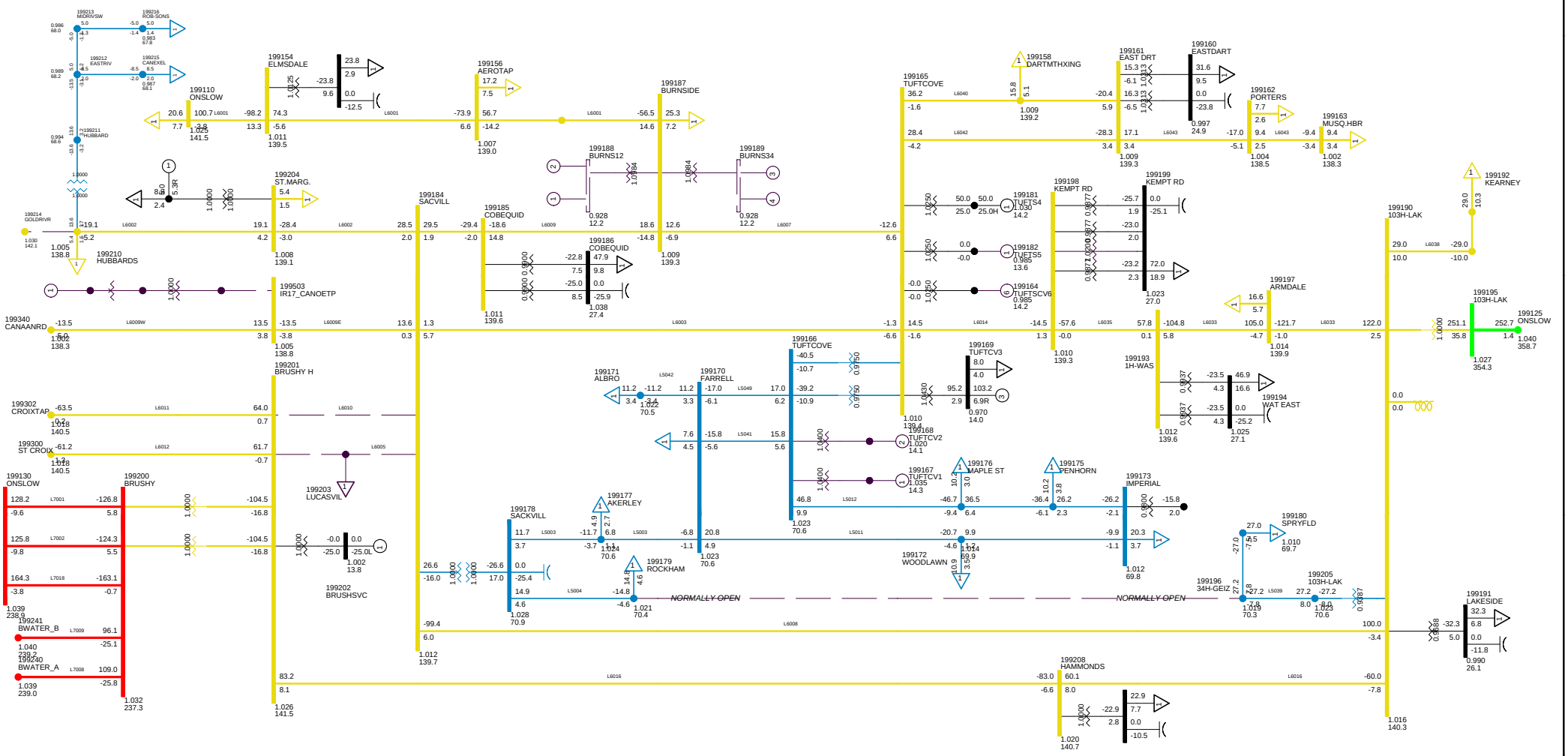

SUMMER PEAK NS-NB = 0
C35 DCT L6005+L6010
METRO ZONE SUN, FEB 08 2009 8:29

Bus - VOLTAGE (KV/PU)
Branch - MW/MVAR
Equipment - MW/MVAR
100.0%RATEA
1.050OV 0.950UV
KV: <=30.000 <=69.000 <=138.000 <=230.000 <=345.000 >345.000

Figure __

Total Wind Gen: 105.0 MW | Gross Tupper 165.0 MW | Gross Wreck Cove 0.0 MW

Gross Lingan 625.0 MW | Gross Trenton 310.0 MW | Gross Gas Turbine 0.0 MW

Gross Pt Aconi 185.0 MW | Gross Tuft's Cove 153.2 MW | Gross Small Hydro 42.9 MW

Net Stora Load 178.9 MW | Total BMPC Load 108.5 MW

NSX 32.5 MW

CBX 589.7 MW

ONI 852.2 MW

ONS 770.4 MW

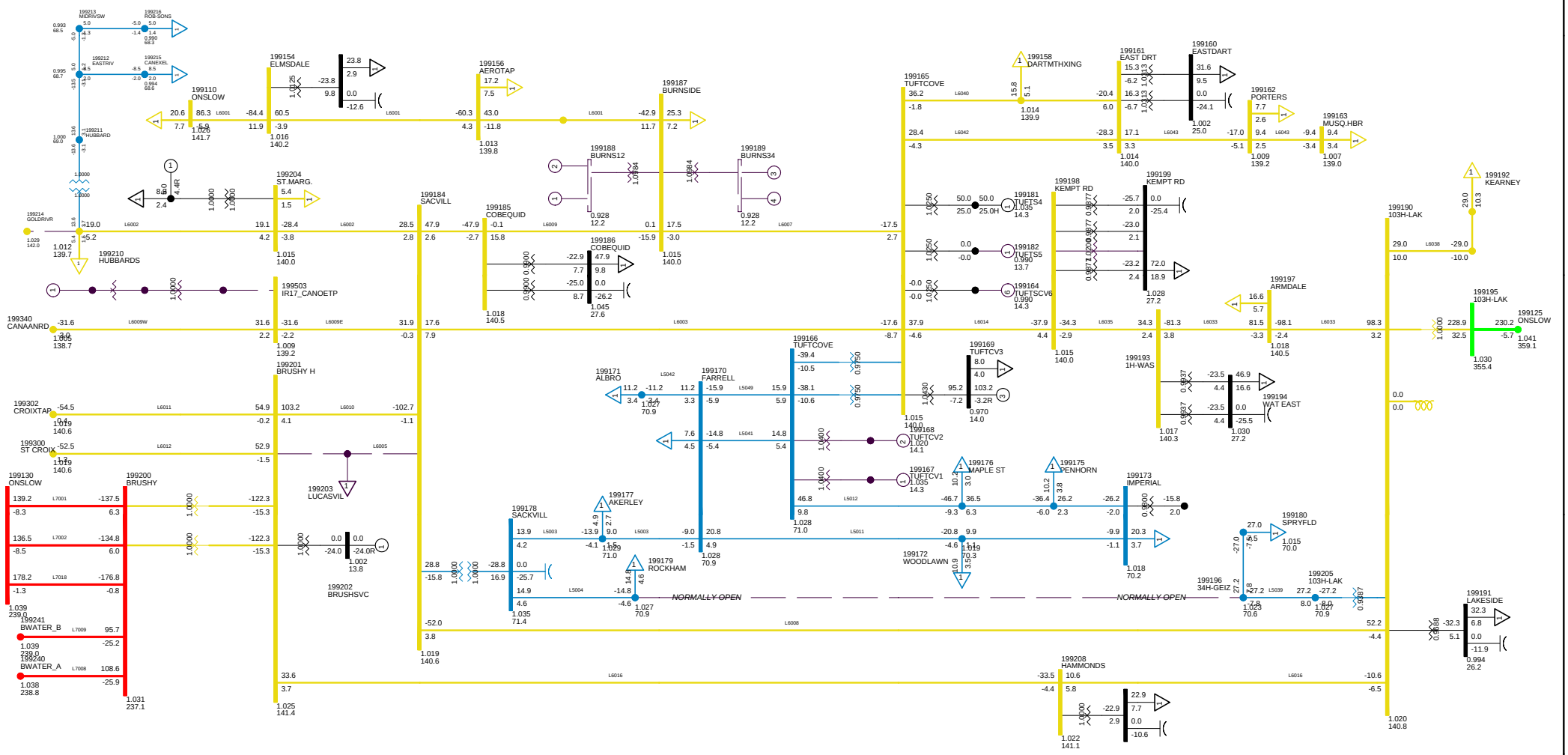

2010 SUMMER PEAK, NSLOAD=1700
NS-NB=0 NB-NE=1000; CBX=589; ONI=852 ONS=803
METRO ZONE SUN, FEB 08 2009 8:29

Bus - VOLTAGE (KV/PU)
Branch - MW/MVAR
Equipment - MW/MVAR
100.0%RATEA
1.050OV 0.950UV
KV: <=30.000 <=69.000 <=138.000 <=230.000 <=345.000 >345.000

Figure __

Total Wind Gen: 105.0 MW
Gross Tupper 165.0 MW
Gross Wreck Cove 0.0 MW
Gross Lingan 625.0 MW
Gross Trenton 310.0 MW
Gross Gas Turbine 0.0 MW
Gross Pt Aconi 185.0 MW
Gross Tuft's Cove 153.2 MW
Gross Small Hydro 42.9 MW

Net Stora Load 178.9 MW
Total BMPC Load 108.5 MW

NSX 55.9 MW
CBX 589.7 MW
ONI 852.3 MW
ONS 747.0 MW

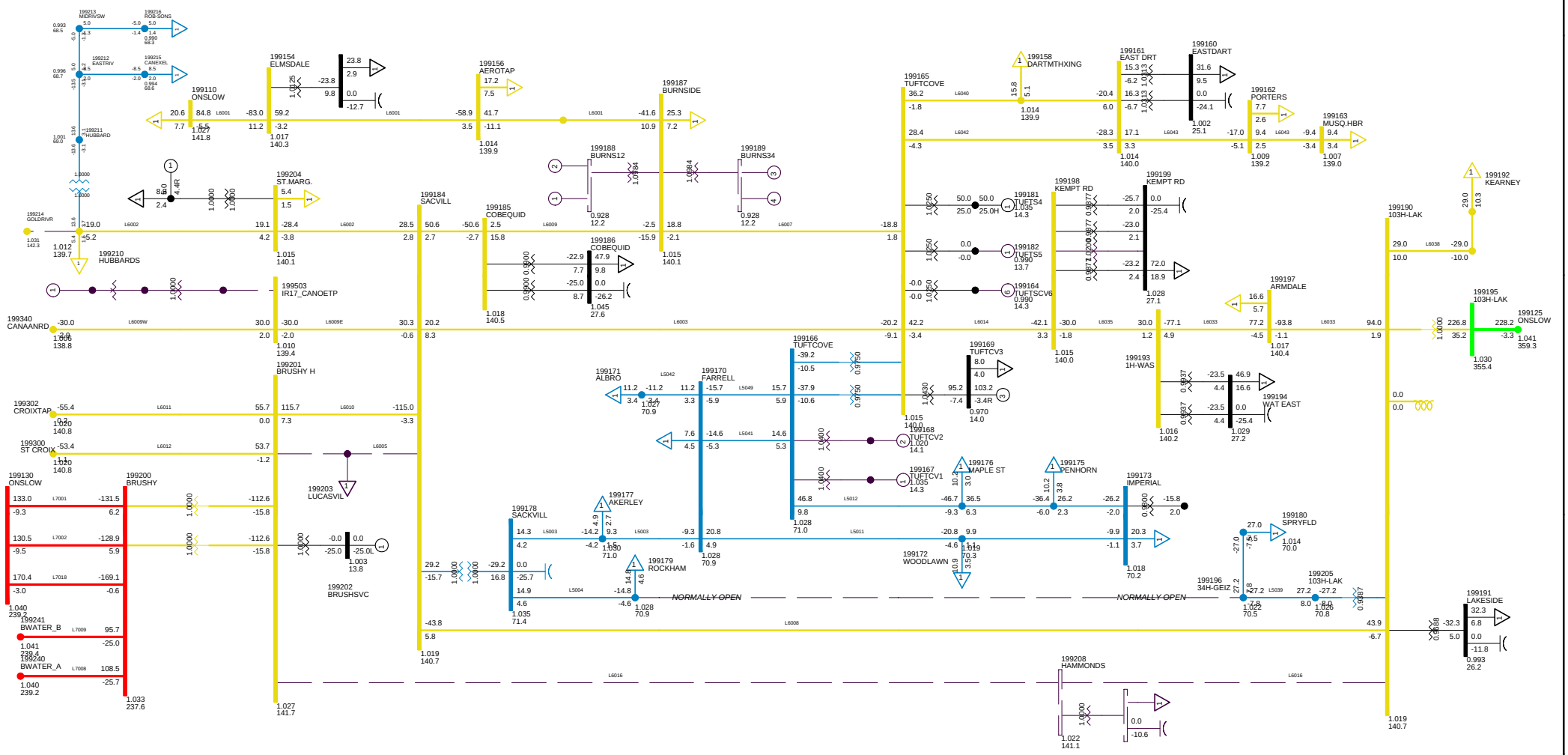

SUMMER PEAK NS-NB = 0
C37 DCT L6005 L6016
METRO ZONE SUN, FEB 08 2009 8:30

Bus - VOLTAGE (KV/PU)
Branch - MW/MVAR
Equipment - MW/MVAR
100.0%RATEA
1.050OV 0.950UV
KV: <=30.000 <=69.000 <=138.000 <=230.000 <=345.000 >345.000

Figure __

Total Wind Gen: 105.0 MW | Gross Tupper 165.0 MW | Gross Wreck Cove 0.0 MW

Gross Lingan 625.0 MW | Gross Trenton 310.0 MW | Gross Gas Turbine 0.0 MW

Gross Pt Aconi 185.0 MW | Gross Tuft's Cove 153.2 MW | Gross Small Hydro 42.9 MW

Net Stora Load 178.9 MW | Total BMPC Load 108.5 MW

NSX 49.2 MW

CBX 589.7 MW

ONI 852.2 MW

ONS 753.6 MW

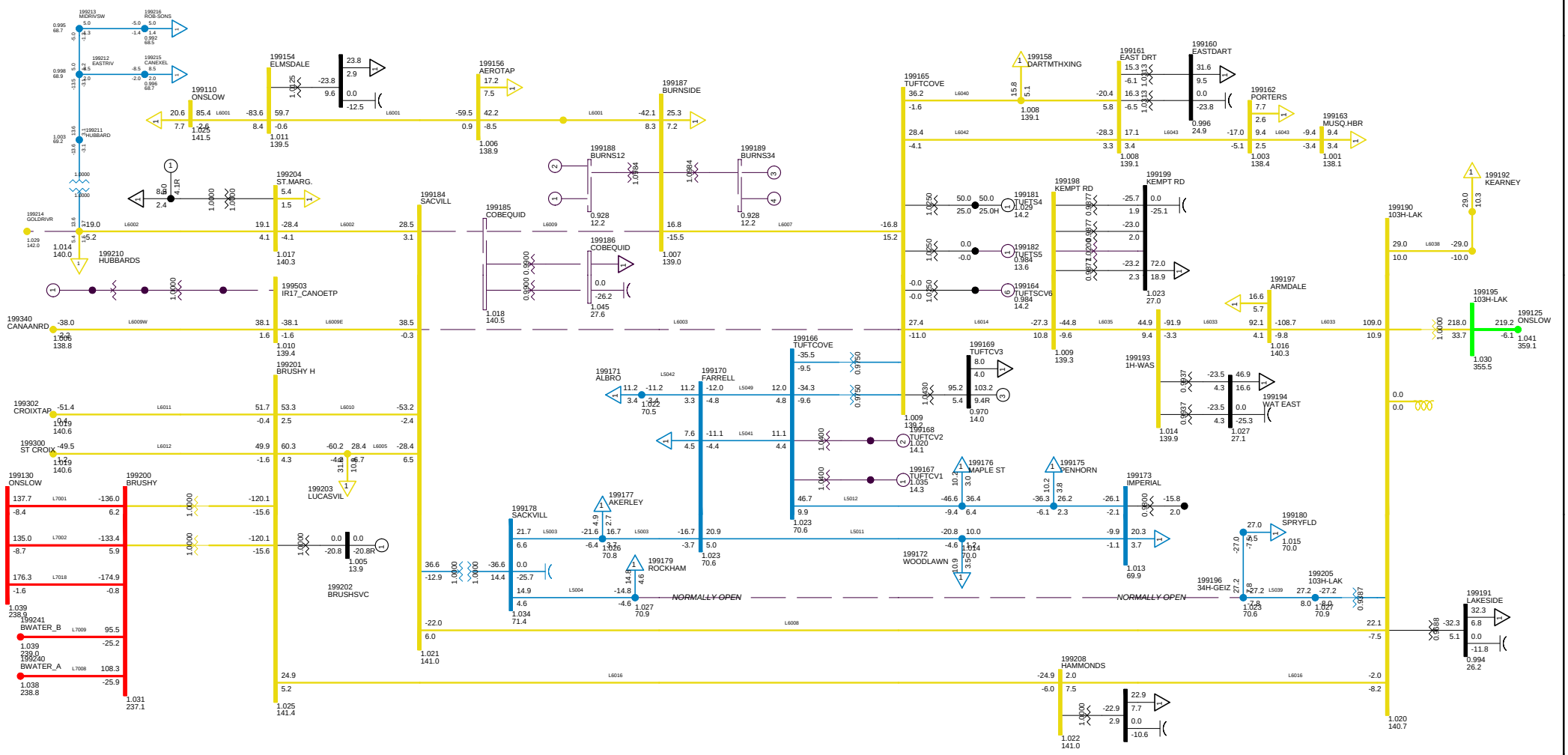

SUMMER PEAK NS-NB = 0
C38 DCT L6003 L6009
METRO ZONE SUN, FEB 08 2009 8:30

Bus - VOLTAGE (KV/PU)
Branch - MW/MVAR
Equipment - MW/MVAR
100.0%RATEA
1.050OV 0.950UV
KV: <=30.000 <=69.000 <=138.000 <=230.000 <=345.000 >345.000

Figure __

Total Wind Gen: 105.0 MW | Gross Tupper 165.0 MW | Gross Wreck Cove 0.0 MW

Gross Lingan 625.0 MW | Gross Trenton 310.0 MW | Gross Gas Turbine 0.0 MW

Gross Pt Aconi 185.0 MW | Gross Tuft's Cove 153.2 MW | Gross Small Hydro 42.9 MW

Net Stora Load 178.9 MW | Total BMPC Load 108.5 MW

NSX -0.1 MW

CBX 589.6 MW

ONI 852.1 MW

ONS 802.9 MW

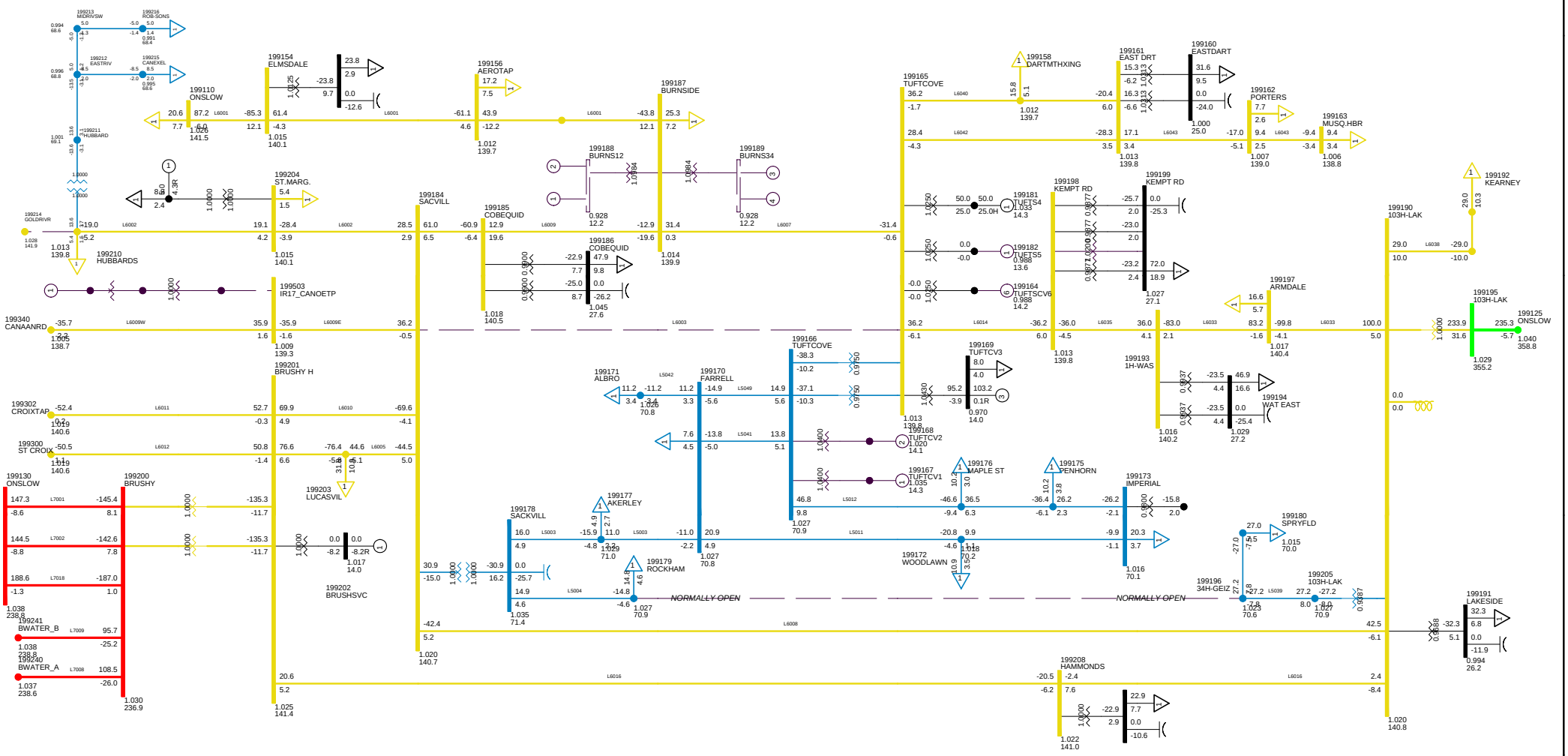

SUMMER PEAK NS-NB = 0
C39 DCT L6003 L6007
METRO ZONE SUN, FEB 08 2009 8:30

Bus - VOLTAGE (KV/PU)
Branch - MW/MVAR
Equipment - MW/MVAR
100.0%RATEA
1.050OV 0.950UV
KV: <=30.000 <=69.000 <=138.000 <=230.000 <=345.000 >345.000

Figure __

Total Wind Gen: 105.0 MW | Gross Tupper 165.0 MW | Gross Wreck Cove 0.0 MW

Gross Lingan 625.0 MW | Gross Trenton 310.0 MW | Gross Gas Turbine 0.0 MW

Gross Pt Aconi 185.0 MW | Gross Tuft's Cove 153.2 MW | Gross Small Hydro 23.9 MW

Net Stora Load 178.9 MW | Total BMPC Load 0.0 MW

NSX 216.6 MW

CBX 589.9 MW

ONI 852.6 MW

ONS 585.9 MW

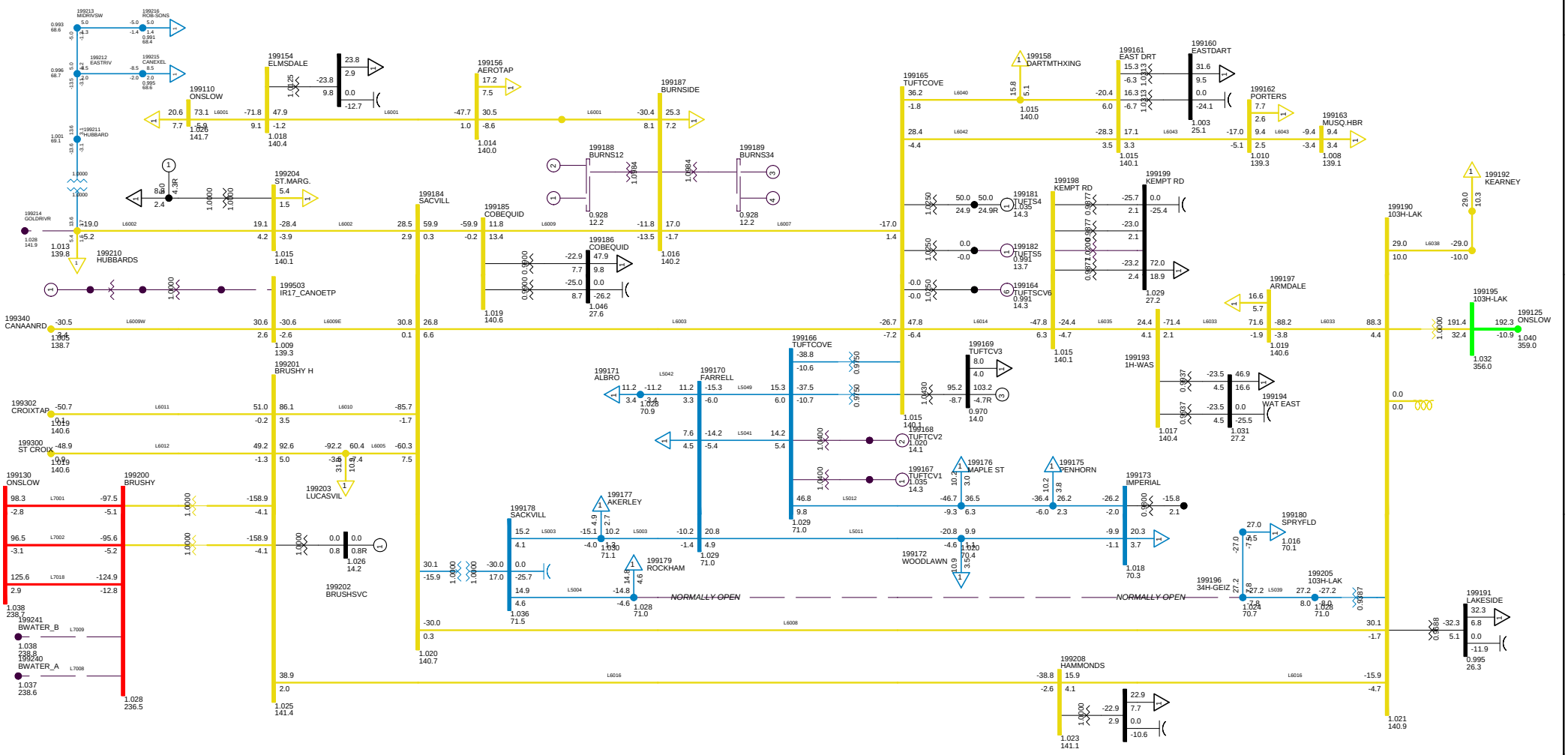

SUMMER PEAK NS-NB = 0
C40 DCT L7008 L7009 ISOLATES WEST
METRO ZONE SUN, FEB 08 2009 8:30

Bus - VOLTAGE (KV/PU)
Branch - MW/MVAR
Equipment - MW/MVAR
100.0%RATEA
1.050OV 0.950UV
KV: <=30.000 <=69.000 <=138.000 <=230.000 <=345.000 >345.000

Figure __

Total Wind Gen: 105.0 MW | Gross Tupper 165.0 MW | Gross Wreck Cove 0.0 MW

Gross Lingan 625.0 MW | Gross Trenton 310.0 MW | Gross Gas Turbine 0.0 MW

Gross Pt Aconi 185.0 MW | Gross Tuft's Cove 153.2 MW | Gross Small Hydro 42.9 MW

Net Stora Load 178.9 MW | Total BMPC Load 108.5 MW

NSX 55.9 MW

CBX 589.7 MW

ONI 852.3 MW

ONS 747.0 MW

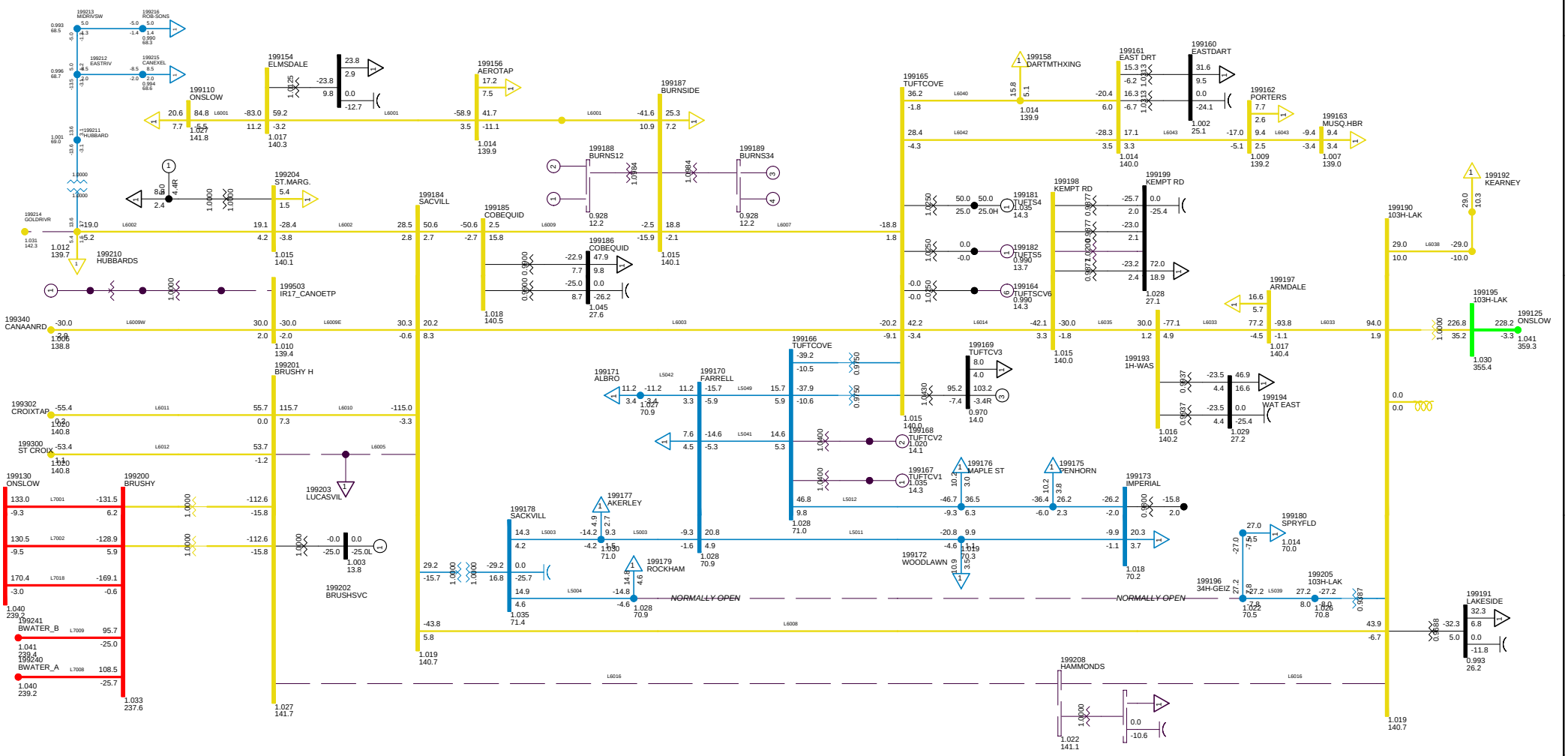

SUMMER PEAK NS-NB = 0
C41 1P FAULT ON L6016, BBU 622
METRO ZONE SUN, FEB 08 2009 8:30

Bus - VOLTAGE (KV/PU)
Branch - MW/MVAR
Equipment - MW/MVAR
100.0%RATEA
1.050OV 0.950UV
KV: <=30.000 <=69.000 <=138.000 <=230.000 <=345.000 >345.000

Figure __

Total Wind Gen: 105.0 MW
Gross Tupper 165.0 MW
Gross Wreck Cove 0.0 MW
Gross Lingan 625.0 MW
Gross Trenton 310.0 MW
Gross Gas Turbine 0.0 MW
Gross Pt Aconi 185.0 MW
Gross Tuft's Cove 153.2 MW
Gross Small Hydro 42.9 MW
Net Stora Load 178.9 MW
Total BMPC Load 108.5 MW

NSX 36.4 MW
CBX 589.3 MW
ONI 851.4 MW
ONS 765.6 MW

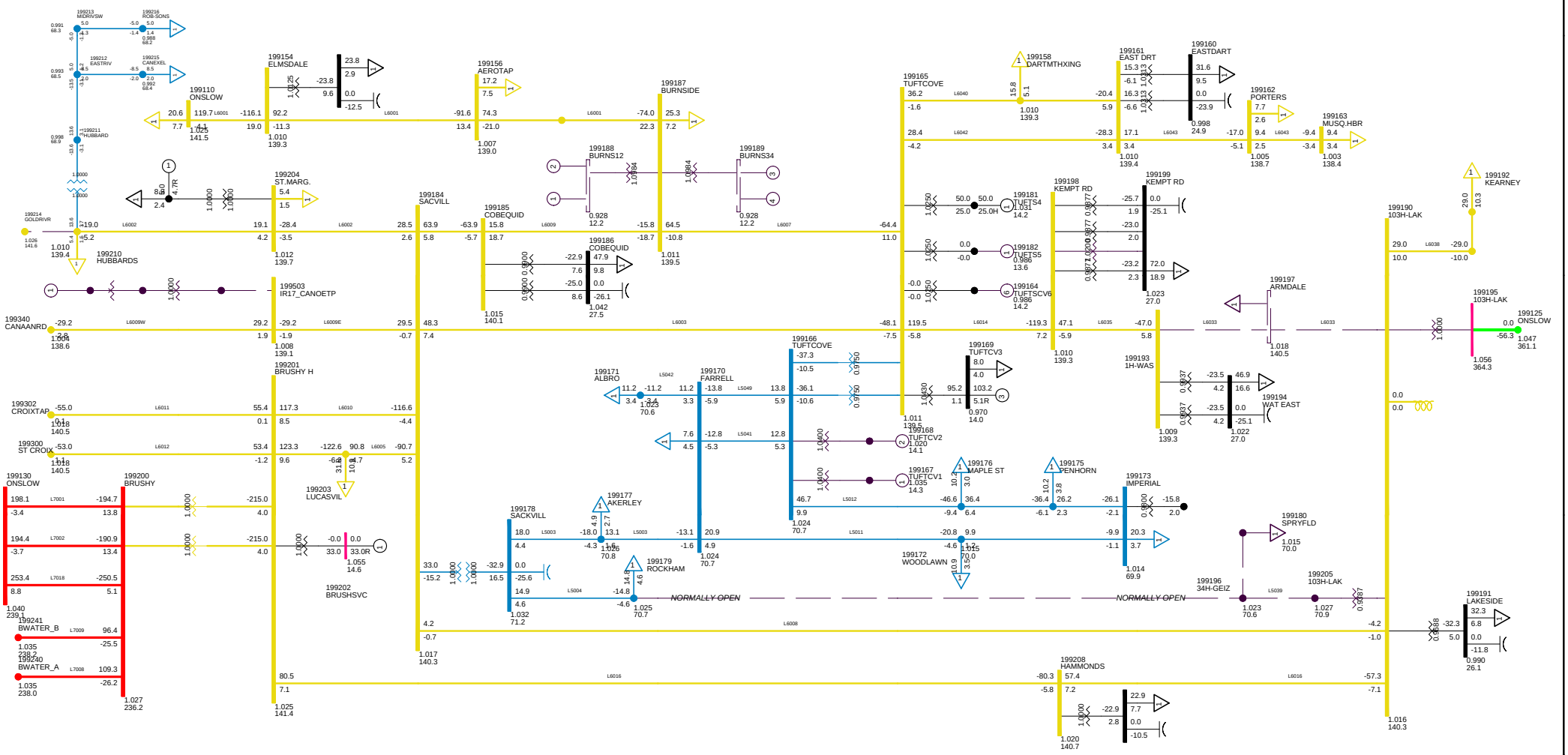

SUMMER PEAK NS-NB = 0
C42 1P L6033, BBU 103H-632
METRO ZONE SUN, FEB 08 2009 8:30

Bus - VOLTAGE (KV/PU)
Branch - MW/MVAR
Equipment - MW/MVAR
100.0%RATEA
1.050OV 0.950UV
KV: <=30.000 <=69.000 <=138.000 <=230.000 <=345.000 >345.000

Figure __

Total Wind Gen: 105.0 MW
Gross Tupper 165.0 MW
Gross Wreck Cove 0.0 MW
Gross Lingan 625.0 MW
Gross Trenton 310.0 MW
Gross Gas Turbine 0.0 MW
Gross Pt Aconi 185.0 MW
Gross Tuft's Cove 153.2 MW
Gross Small Hydro 42.9 MW
Net Stora Load 178.9 MW
Total BMPC Load 108.5 MW

NSX 31.2 MW
CBX 589.7 MW
ONI 852.3 MW
ONS 771.7 MW

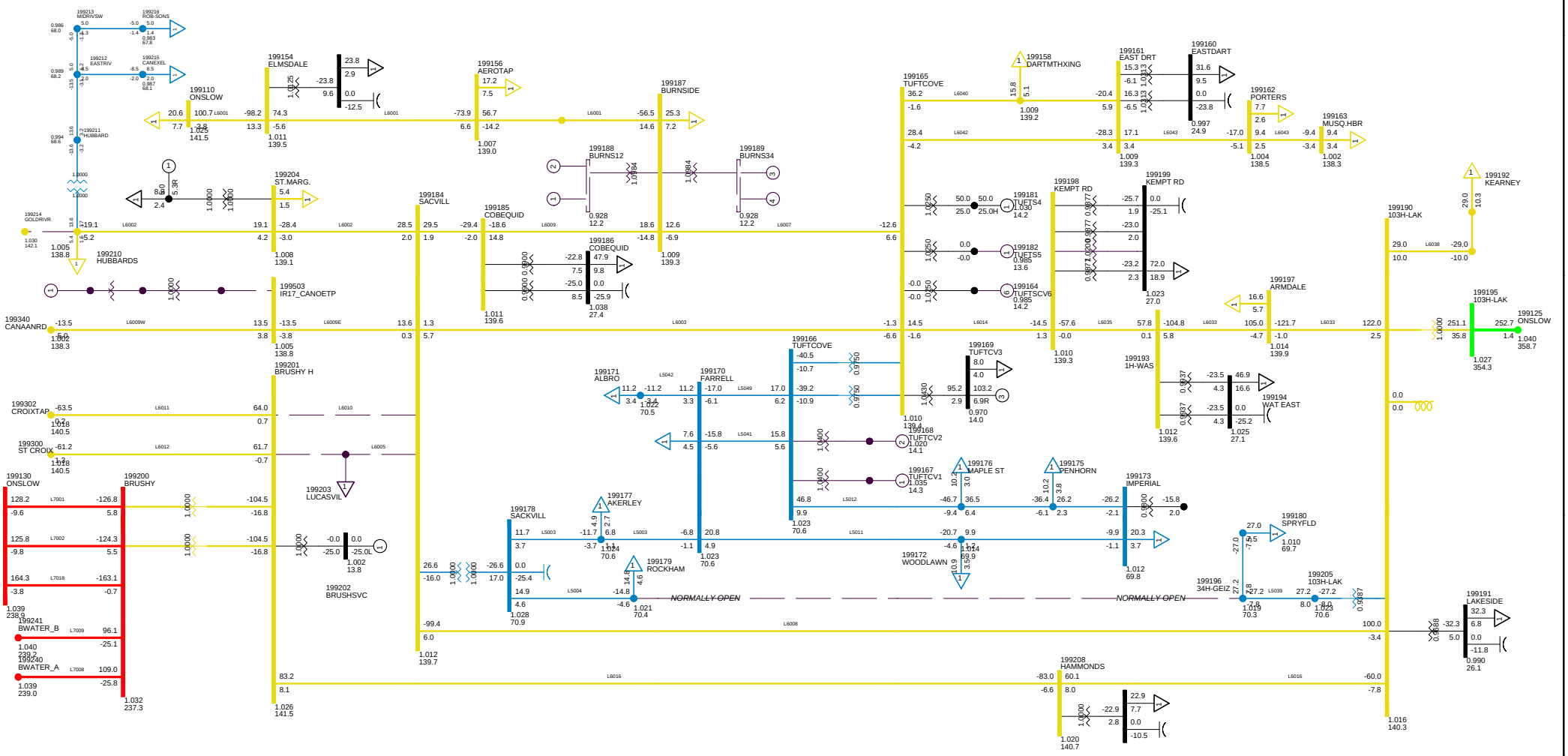

SUMMER PEAK NS-NB = 0
C43 BBU L6005 L6010 90H-608
METRO ZONE SUN, FEB 08 2009 8:30

Bus - VOLTAGE (KV/PU)
Branch - MW/MVAR
Equipment - MW/MVAR
100.0%RATEA
1.050OV 0.950UV
KV: <=30.000 <=69.000 <=138.000 <=230.000 <=345.000 >345.000

Figure __

Total Wind Gen: 105.0 MW | Gross Tupper 165.0 MW | Gross Wreck Cove 0.0 MW

Gross Lingan 625.0 MW | Gross Trenton 310.0 MW | Gross Gas Turbine 0.0 MW

Gross Pt Aconi 185.0 MW | Gross Tuft's Cove 153.2 MW | Gross Small Hydro 42.9 MW

Net Stora Load 178.9 MW | Total BMPC Load 108.5 MW

NSX 49.2 MW

CBX 589.7 MW

ONI 852.2 MW

ONS 753.6 MW

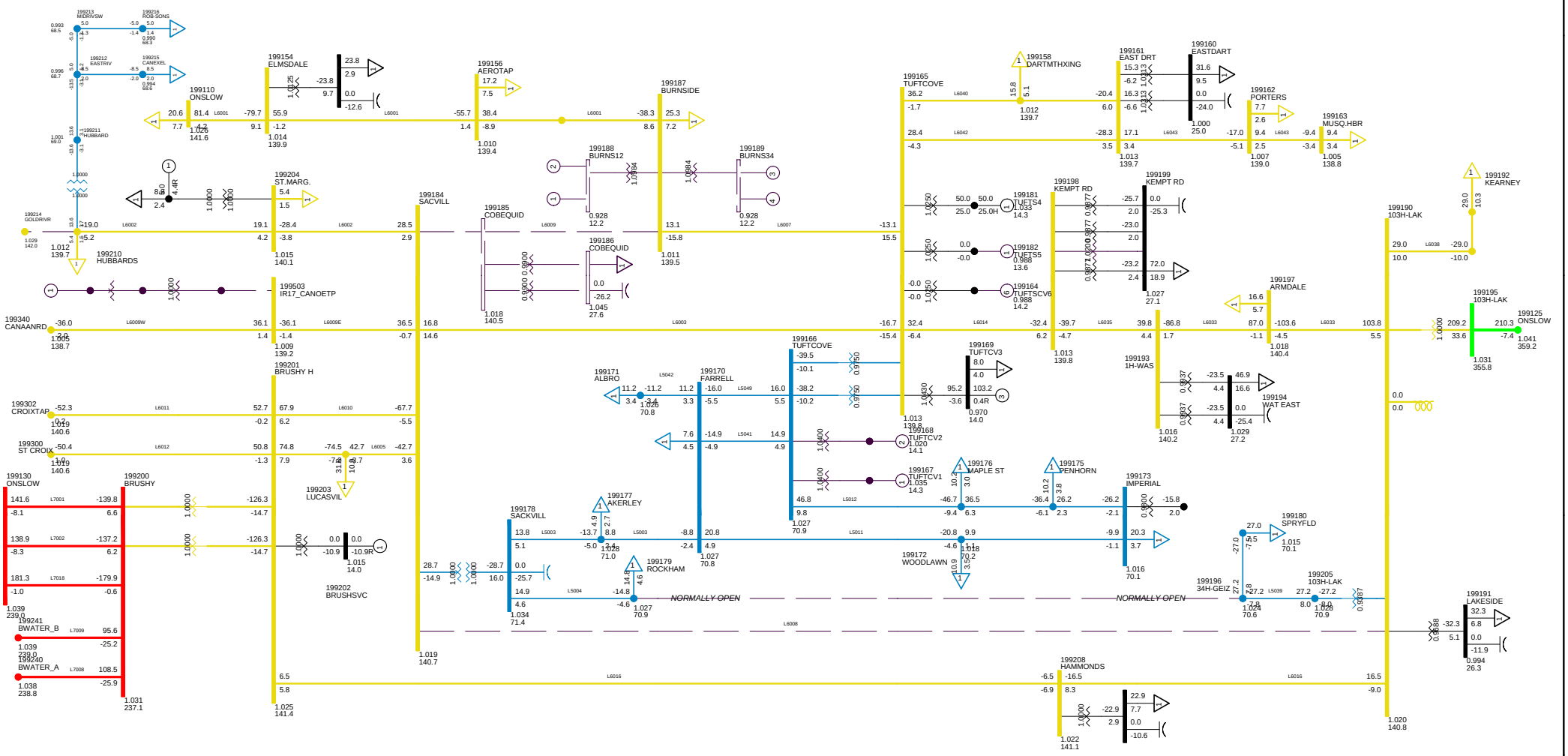

SUMMER PEAK NS-NB = 0
C44 BBU L6008 L6009 90H-611
METRO ZONE SUN, FEB 08 2009 8:31

Bus - VOLTAGE (KV/PU)
Branch - MW/MVAR
Equipment - MW/MVAR
100.0%RATEA
1.050OV 0.950UV
KV: <=30.000 <=69.000 <=138.000 <=230.000 <=345.000 >345.000

Figure __

Total Wind Gen: 105.0 MW
Gross Tupper 165.0 MW
Gross Wreck Cove 0.0 MW
Gross Lingan 625.0 MW
Gross Trenton 310.0 MW
Gross Gas Turbine 0.0 MW
Gross Pt Aconi 185.0 MW
Gross Tuft's Cove 103.2 MW
Gross Small Hydro 42.9 MW
Net Stora Load 178.9 MW
Total BMPC Load 108.5 MW

NSX 34.1 MW
CBX 589.7 MW
ONI 852.2 MW
ONS 768.8 MW

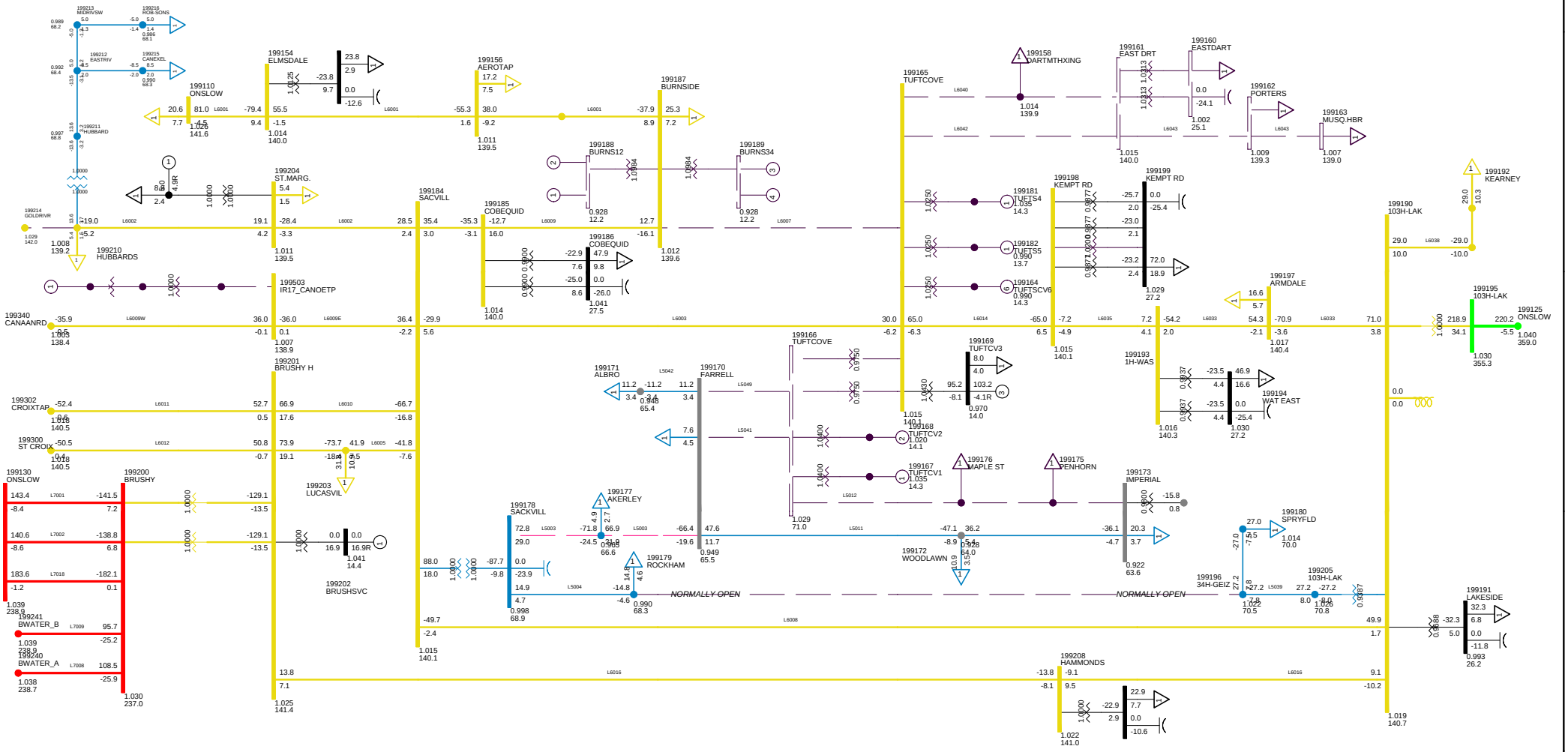

SUMMER PEAK NS-NB = 0
C45 BBU ON 91H-523
METRO ZONE SUN, FEB 08 2009 8:31

Bus - VOLTAGE (KV/PU)
Branch - MW/MVAR
Equipment - MW/MVAR
100.0%RATEA
1.050OV 0.950UV
KV: <=30.000 <=69.000 <=138.000 <=230.000 <=345.000 >345.000

Figure __

Total Wind Gen: 105.0 MW | Gross Tupper 165.0 MW | Gross Wreck Cove 0.0 MW

Gross Lingan 625.0 MW | Gross Trenton 310.0 MW | Gross Gas Turbine 0.0 MW

Gross Pt Aconi 185.0 MW | Gross Tuft's Cove 153.2 MW | Gross Small Hydro 42.9 MW

Net Stora Load 178.9 MW | Total BMPC Load 108.5 MW

NSX 75.8 MW

CBX 589.7 MW

ONI 852.3 MW

ONS 727.0 MW

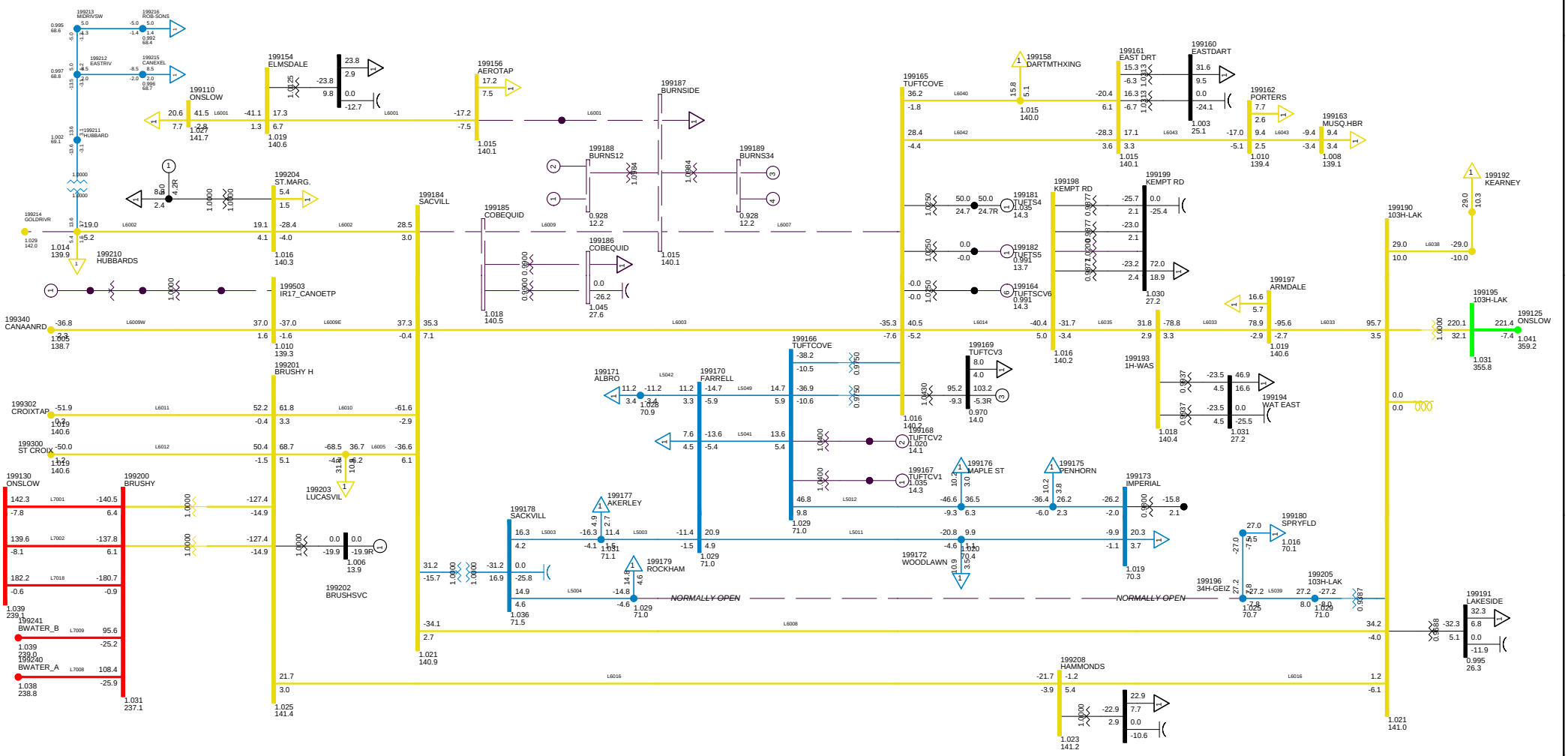

SUMMER PEAK NS-NB = 0
C46 1P L6009 BBU ON 108H 607
METRO ZONE SUN, FEB 08 2009 8:31

Bus - VOLTAGE (KV/PU)
Branch - MW/MVAR
Equipment - MW/MVAR
100.0%RATEA
1.050OV 0.950UV
KV: <=30.000 <=69.000 <=138.000 <=230.000 <=345.000 >345.000

Figure __

Total Wind Gen: 105.0 MW
Gross Tupper 165.0 MW
Gross Wreck Cove 0.0 MW
Gross Lingan 625.0 MW
Gross Trenton 310.0 MW
Gross Gas Turbine 0.0 MW
Gross Pt Aconi 185.0 MW
Gross Tuft's Cove 153.2 MW
Gross Small Hydro 42.9 MW
Net Stora Load 178.9 MW
Total BMPC Load 108.5 MW

NSX 82.9 MW
CBX 589.4 MW
ONI 851.6 MW
ONS 719.2 MW

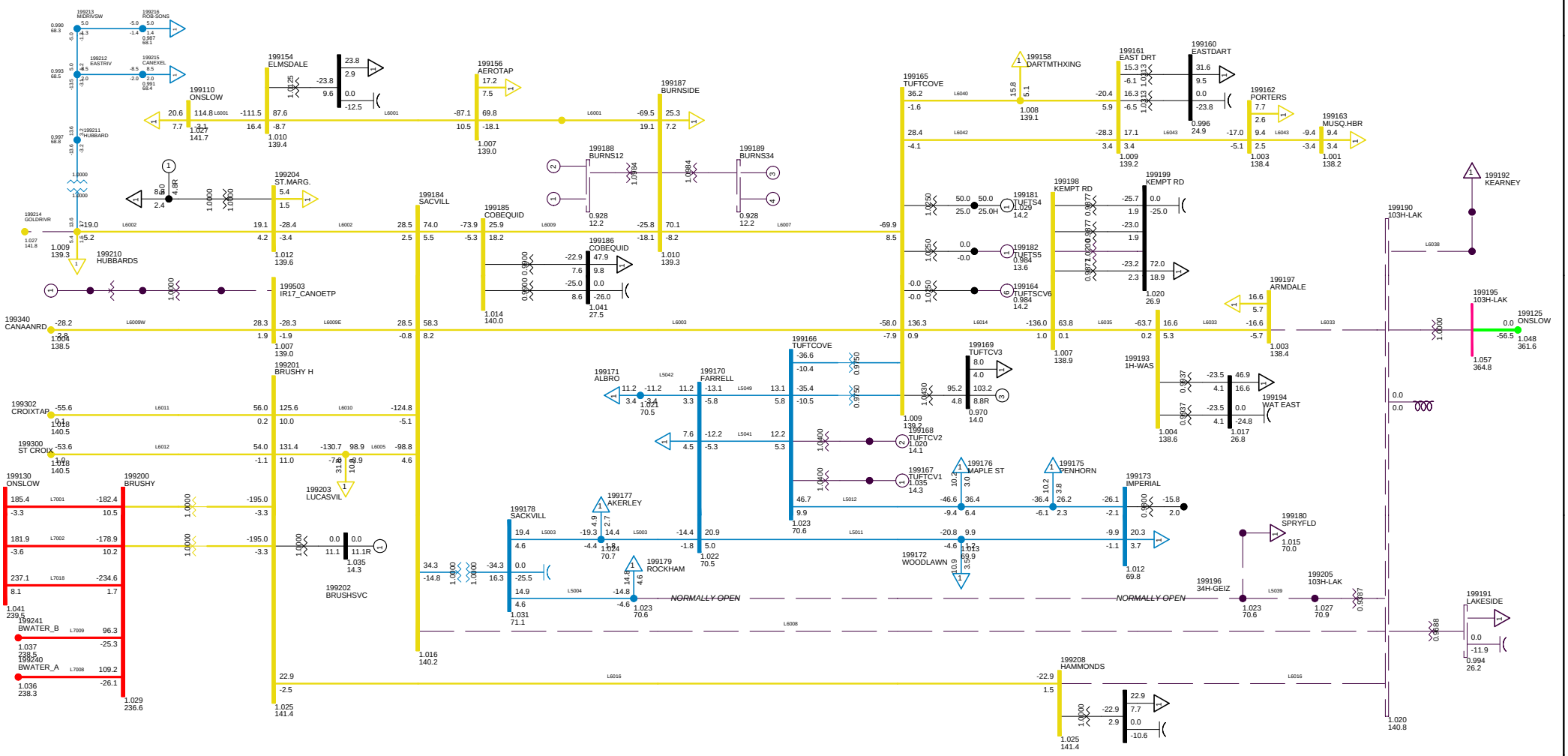

SUMMER PEAK NS-NB = 0
C47 1P 103H-600
METRO ZONE SUN, FEB 08 2009 8:31

Bus - VOLTAGE (KV/PU)
Branch - MW/MVAR
Equipment - MW/MVAR
100.0%RATEA
1.050OV 0.950UV
KV: <=30.000 <=69.000 <=138.000 <=230.000 <=345.000 >345.000

Figure __

Total Wind Gen: 105.0 MW | Gross Tupper 165.0 MW | Gross Wreck Cove 0.0 MW

Gross Lingan 625.0 MW | Gross Trenton 310.0 MW | Gross Gas Turbine 0.0 MW

Gross Pt Aconi 185.0 MW | Gross Tuft's Cove 153.2 MW | Gross Small Hydro 42.9 MW

Net Stora Load 178.9 MW | Total BMPC Load 108.5 MW

NSX -0.2 MW

CBX 589.6 MW

ONI 852.1 MW

ONS 803.0 MW

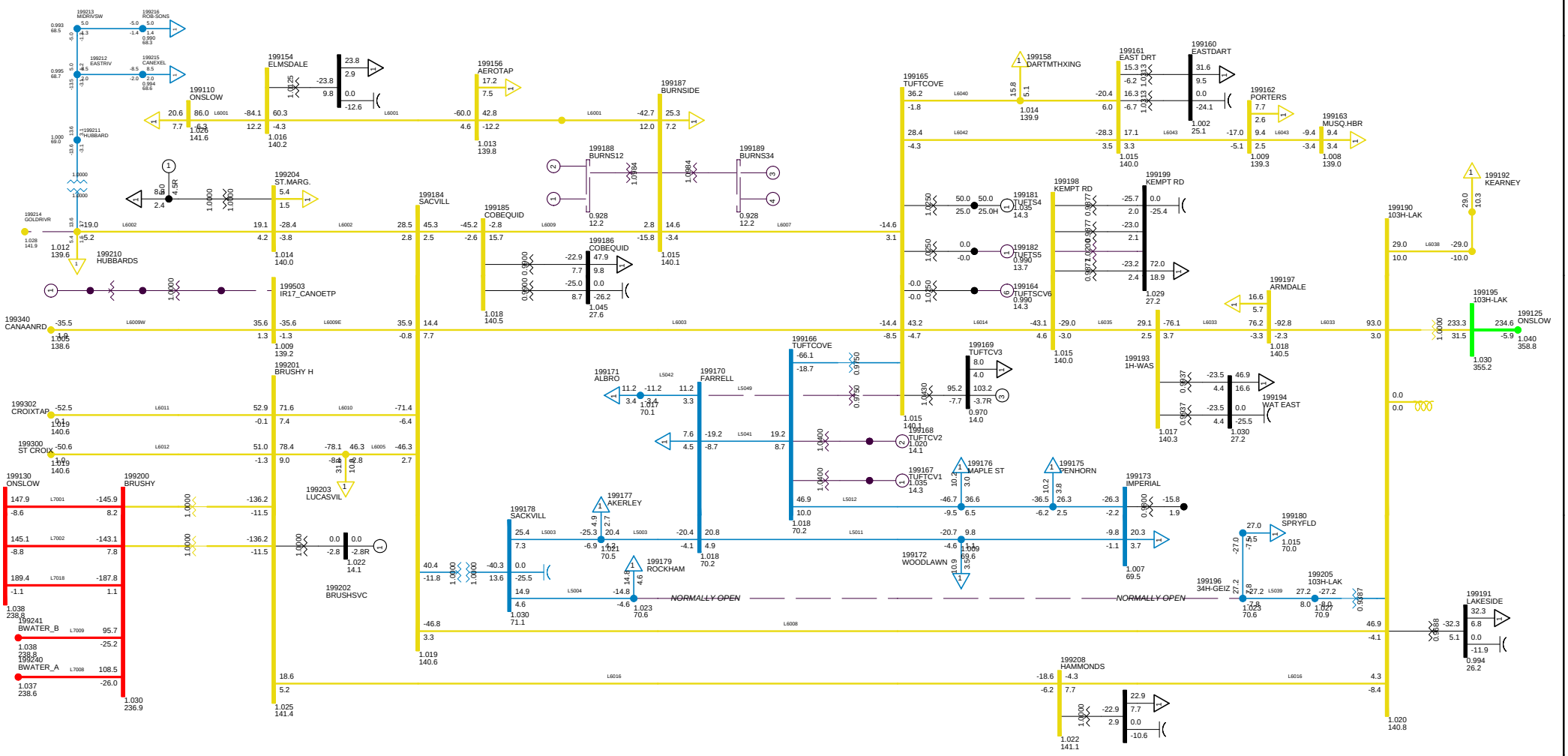

SUMMER PEAK NS-NB = 0
C48 1P ON BREAKER 91H-523
METRO ZONE SUN, FEB 08 2009 8:31

Bus - VOLTAGE (KV/PU)
Branch - MW/MVAR
Equipment - MW/MVAR
100.0%RATEA
1.050OV 0.950UV
KV: <=30.000 <=69.000 <=138.000 <=230.000 <=345.000 >345.000

Figure __

Total Wind Gen: 105.0 MW | Gross Tupper 165.0 MW | Gross Wreck Cove 0.0 MW

Gross Lingan 625.0 MW | Gross Trenton 310.0 MW | Gross Gas Turbine 0.0 MW

Gross Pt Aconi 185.0 MW | Gross Tuft's Cove 153.2 MW | Gross Small Hydro 42.9 MW

Net Stora Load 178.9 MW | Total BMPC Load 108.5 MW

NSX 74.4 MW

CBX 589.7 MW

ONI 852.3 MW

ONS 728.4 MW

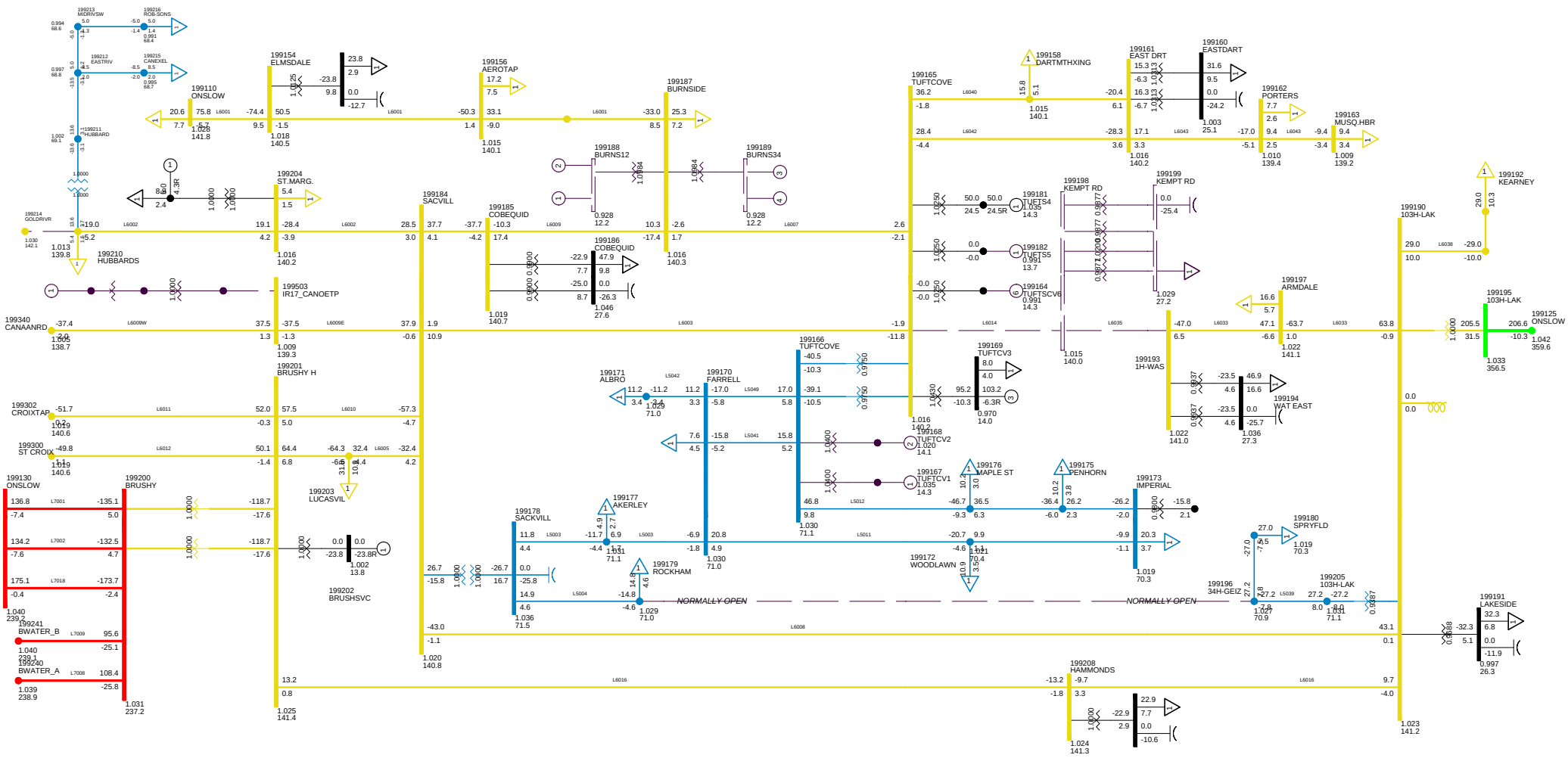

SUMMER PEAK NS-NB = 0
C49 1-PH ON 104H-600
METRO ZONE SUN, FEB 08 2009 8:31

Bus - VOLTAGE (KV/PU)
Branch - MW/MVAR
Equipment - MW/MVAR
100.0%RATEA
1.050OV 0.950UV
KV: <=30.000 <=69.000 <=138.000 <=230.000 <=345.000 >345.000

Figure __

NSX 0.0 MW

CBX 589.6 MW

ONI 852.1 MW

ONS 802.8 MW

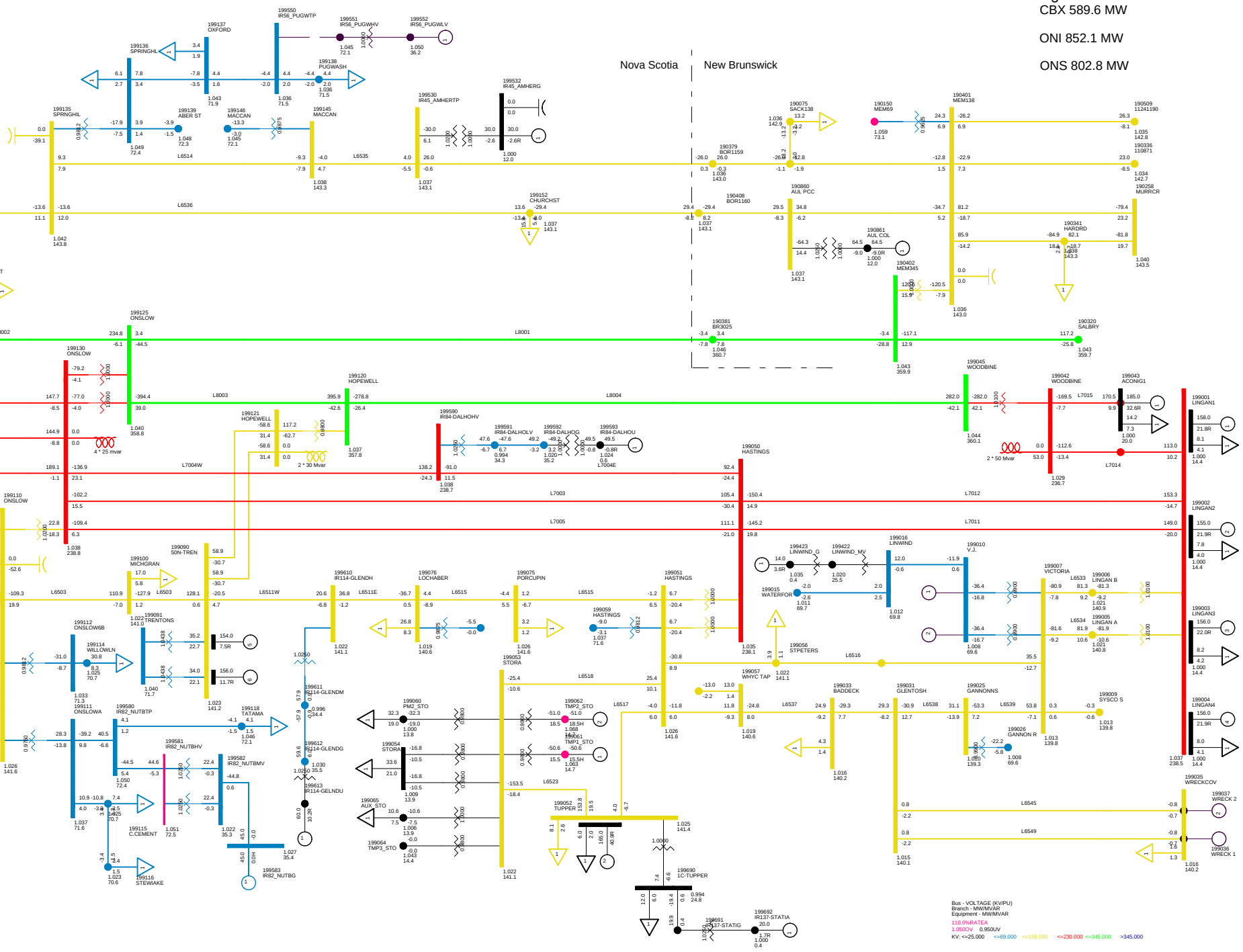

2010 SUMMER PEAK, NSLOAD=1700
NS-NB=0 NB-NE=1000; CBX=589; ONI=852 ONS=803
NORTHEASTERN NS SUN, FEB 08 2009 8:32

Total Wind Gen: 105.0 MW
Gross Lingan 625.0 MW
Gross Pt Aconi 185.0 MW

Gross Tupper 165.0 MW
Gross Trenton 310.0 MW
Gross Tuft's Cove 153.2 MW

Gross Wreck Cove 0.0 MW
Gross Gas Turbine 0.0 MW
Gross Small Hydro 42.9 MW

Net Stora Load 178.9 MW
Total BMPC Load 108.5 MW

Figure ___

NSX -45.3 MW

CBX 568.1 MW

ONI 809.7 MW

ONS 805.2 MW

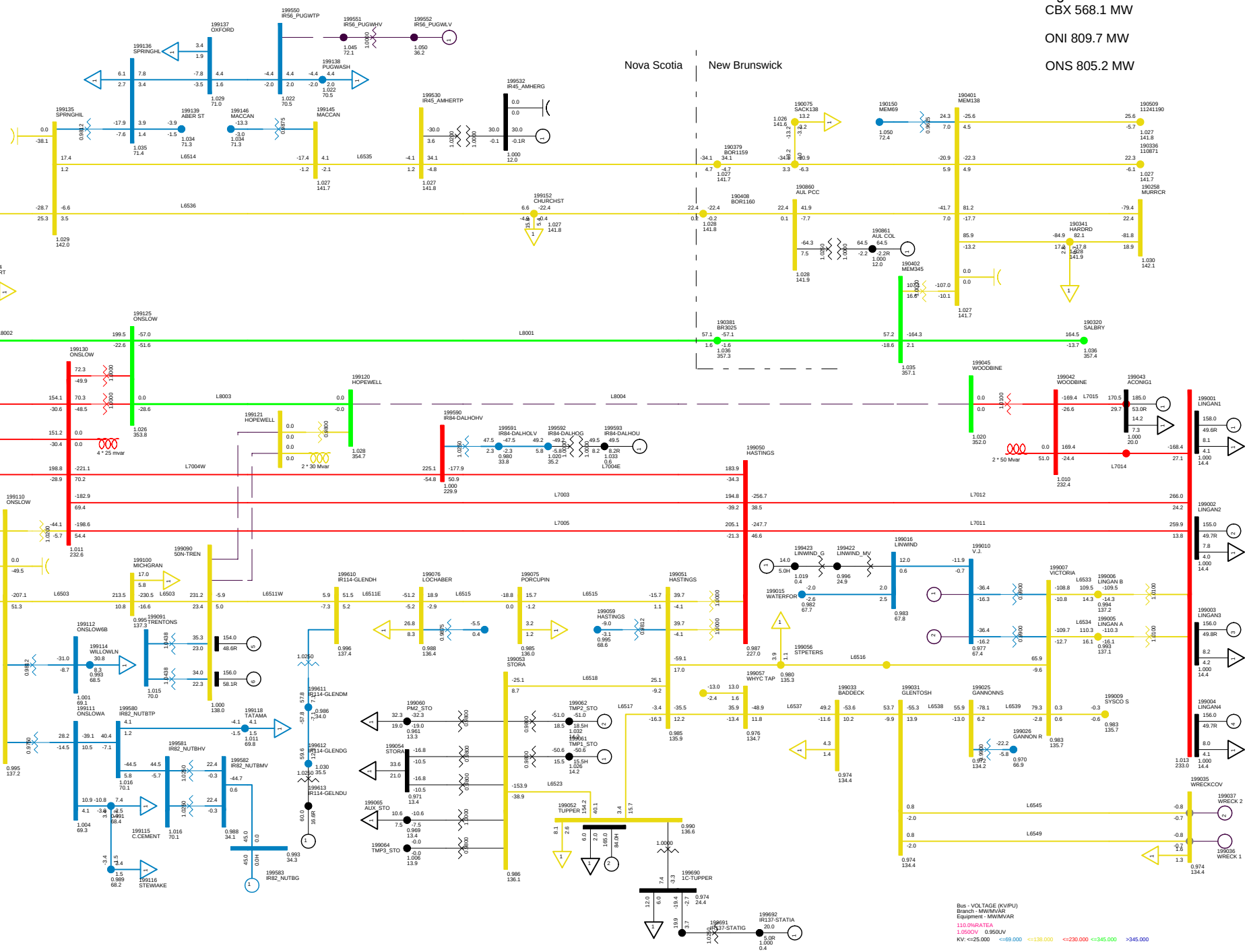

SUMMER PEAK NS-NB = 0
C50 1P FAULT ON L6507, BBU 79N-606, NO SPS
NORTHEASTERN NS SUN, FEB 08 2009 8:32

Total Wind Gen: 105.0 MW
Gross Lingan 625.0 MW
Gross Pt Aconi 185.0 MW

Gross Tupper 165.0 MW
Gross Trenton 310.0 MW
Gross Tuft's Cove 153.2 MW

Gross Wreck Cove 0.0 MW
Gross Gas Turbine 0.0 MW
Gross Small Hydro 42.9 MW

Net Stora Load 178.9 MW
Total BMPC Load 108.5 MW

Figure ___

NSX -164.5 MW

CBX 436.0 MW

ONI 689.1 MW

ONS 804.2 MW

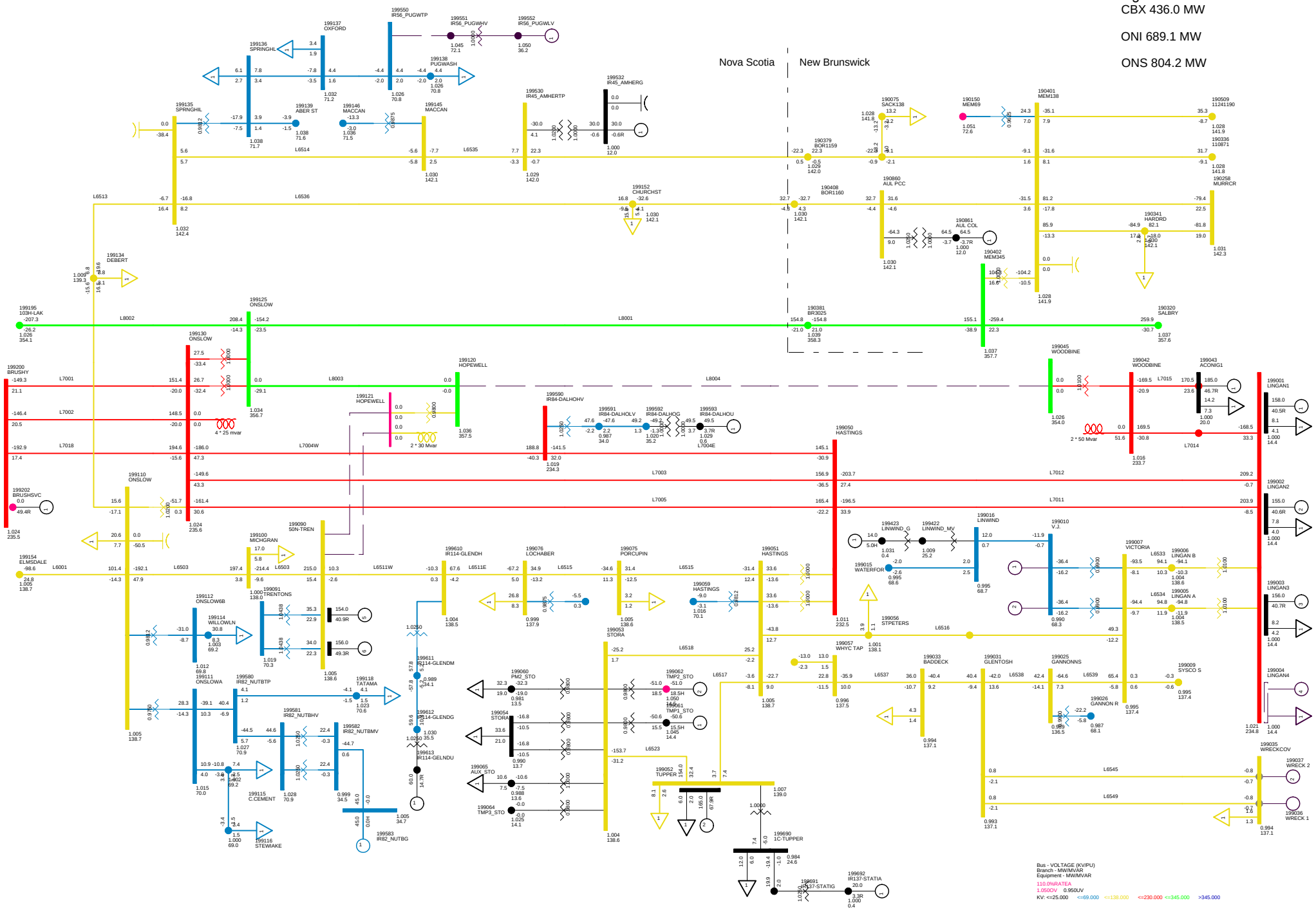

SUMMER PEAK NS-NB = 0
C50S 1P FAULT ON L6507, BBU 79N-606, 1 UNIT SPS
NORTHEASTERN NS SUN, FEB 08 2009 8:32

Total Wind Gen: 105.0 MW
Gross Lingan 469.0 MW
Gross Pt Aconi 185.0 MW

Gross Tupper 165.0 MW
Gross Trenton 310.0 MW
Gross Tuft's Cove 153.2 MW

Gross Wreck Cove 0.0 MW
Gross Gas Turbine 0.0 MW
Gross Small Hydro 42.9 MW

Net Stora Load 178.9 MW
Total BMPC Load 108.5 MW

Figure ___

NSX -291.2 MW

CBX 300.9 MW

ONI 562.1 MW

ONS 803.8 MW

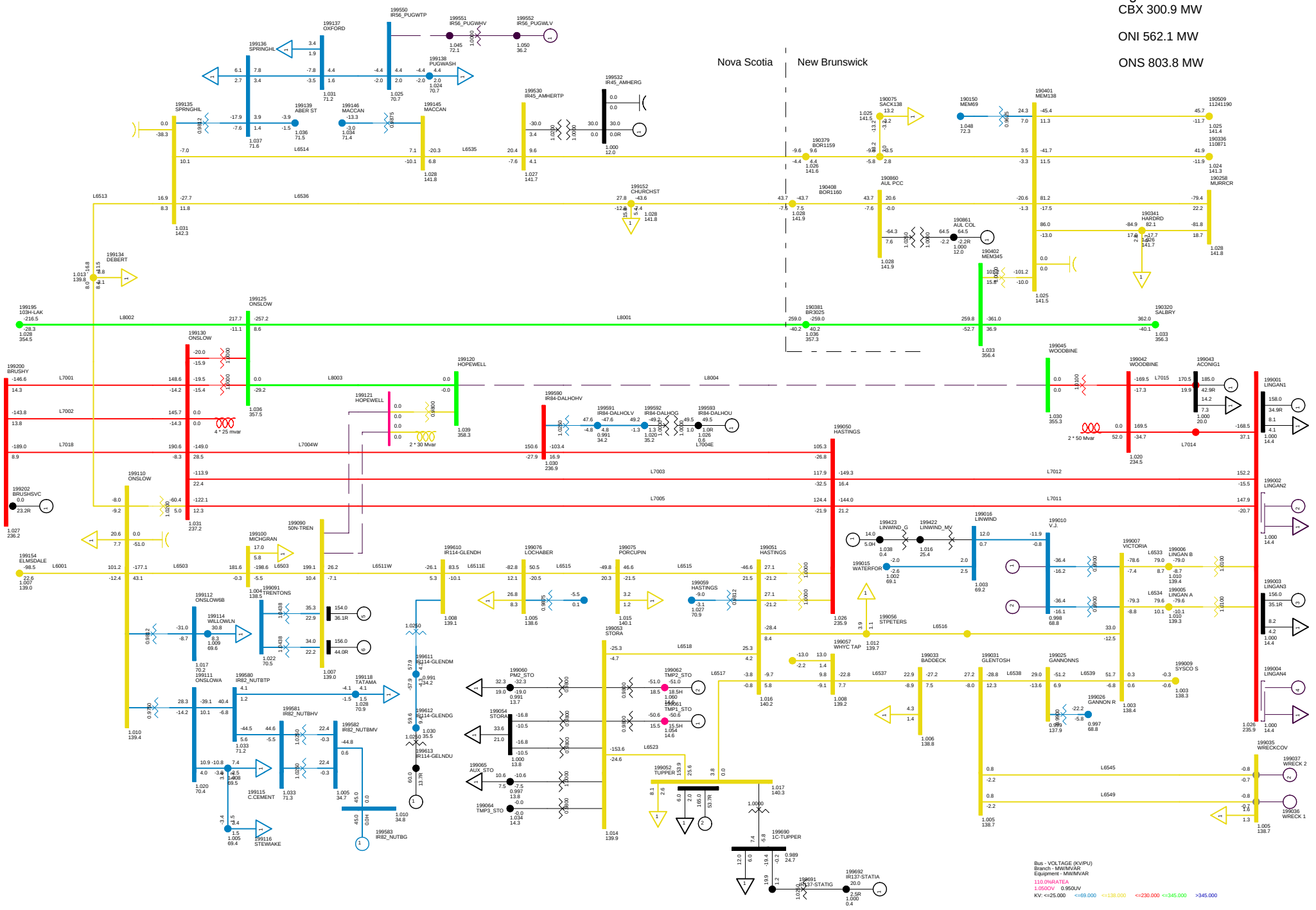

SUMMER PEAK NS-NB = 0
C50SS 1P FAULT ON L6507, BBU 79N-606, 2-UNIT SPS
NORTHEASTERN NS SUN, FEB 08 2009 8:32

Total Wind Gen: 105.0 MW
Gross Lingan 314.0 MW
Gross Pt Aconi 185.0 MW

Gross Tupper 165.0 MW
Gross Trenton 310.0 MW
Gross Tuft's Cove 153.2 MW

Gross Wreck Cove 0.0 MW
Gross Gas Turbine 0.0 MW
Gross Small Hydro 42.9 MW

Net Stora Load 178.9 MW
Total BMPC Load 108.5 MW

Figure ___

NSX 20.6 MW
CBX 589.4 MW
ONI 850.4 MW
ONS 803.8 MW

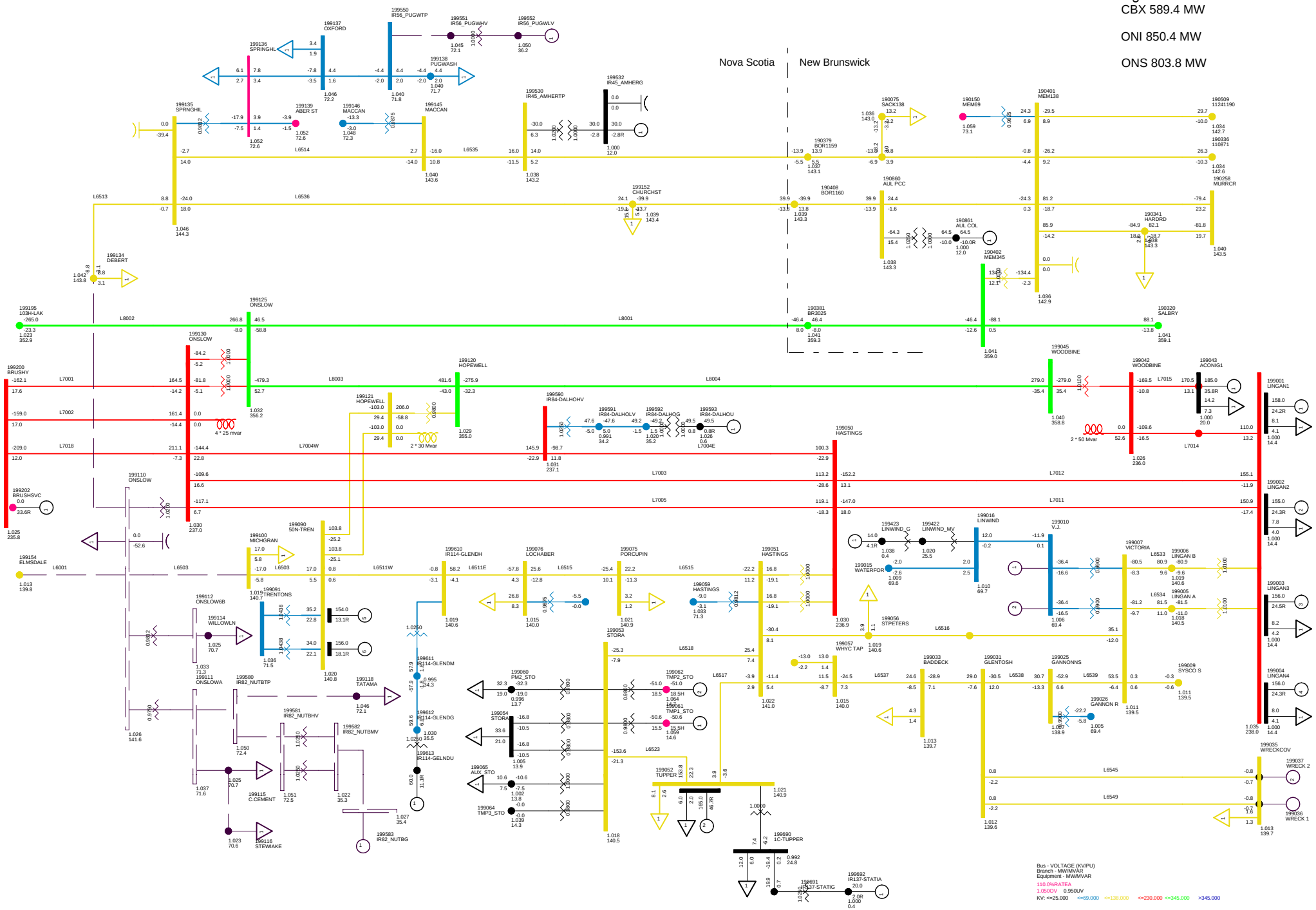

SUMMER PEAK NS-NB = 0
C51 1P FAULT ON 1N BUS 61
NORTHEASTERN NS SUN, FEB 08 2009 8:32

Total Wind Gen: 60.0 MW
Gross Lingan 625.0 MW
Gross Pt Aconi 185.0 MW

Gross Tupper 165.0 MW
Gross Trenton 310.0 MW
Gross Tuft's Cove 153.2 MW

Gross Wreck Cove 0.0 MW
Gross Gas Turbine 0.0 MW
Gross Small Hydro 42.9 MW

Net Stora Load 178.9 MW
Total BMPC Load 108.5 MW

Figure ___

NSX 49.4 MW

CBX 641.3 MW

ONI 901.7 MW

ONS 802.9 MW

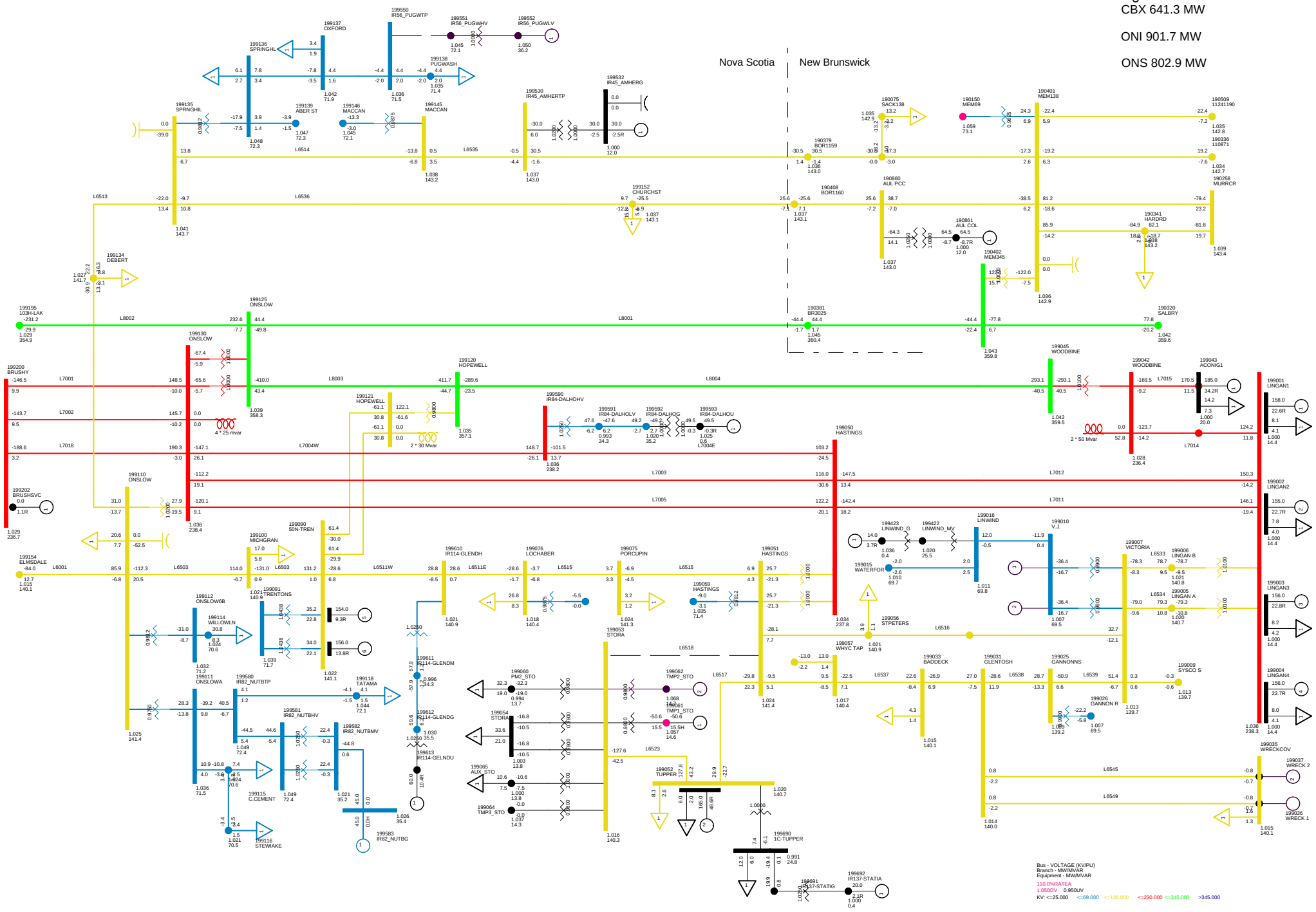

SUMMER PEAK NS-NB = 0
C52 BBU 47C-601
NORTHEASTERN NS SUN, FEB 08 2009 8:32

Total Wind Gen: 105.0 MW
Gross Lingan 625.0 MW
Gross Pt Aconi 185.0 MW

Gross Tupper 165.0 MW
Gross Trenton 310.0 MW
Gross Tuft's Cove 153.2 MW

Gross Wreck Cove 0.0 MW
Gross Gas Turbine 0.0 MW
Gross Small Hydro 42.9 MW

Net Stora Load 127.6 MW
Total BMPC Load 108.5 MW

Figure ___

NSX 49.0 MW
CBX 640.9 MW
ONI 901.3 MW
ONS 802.9 MW

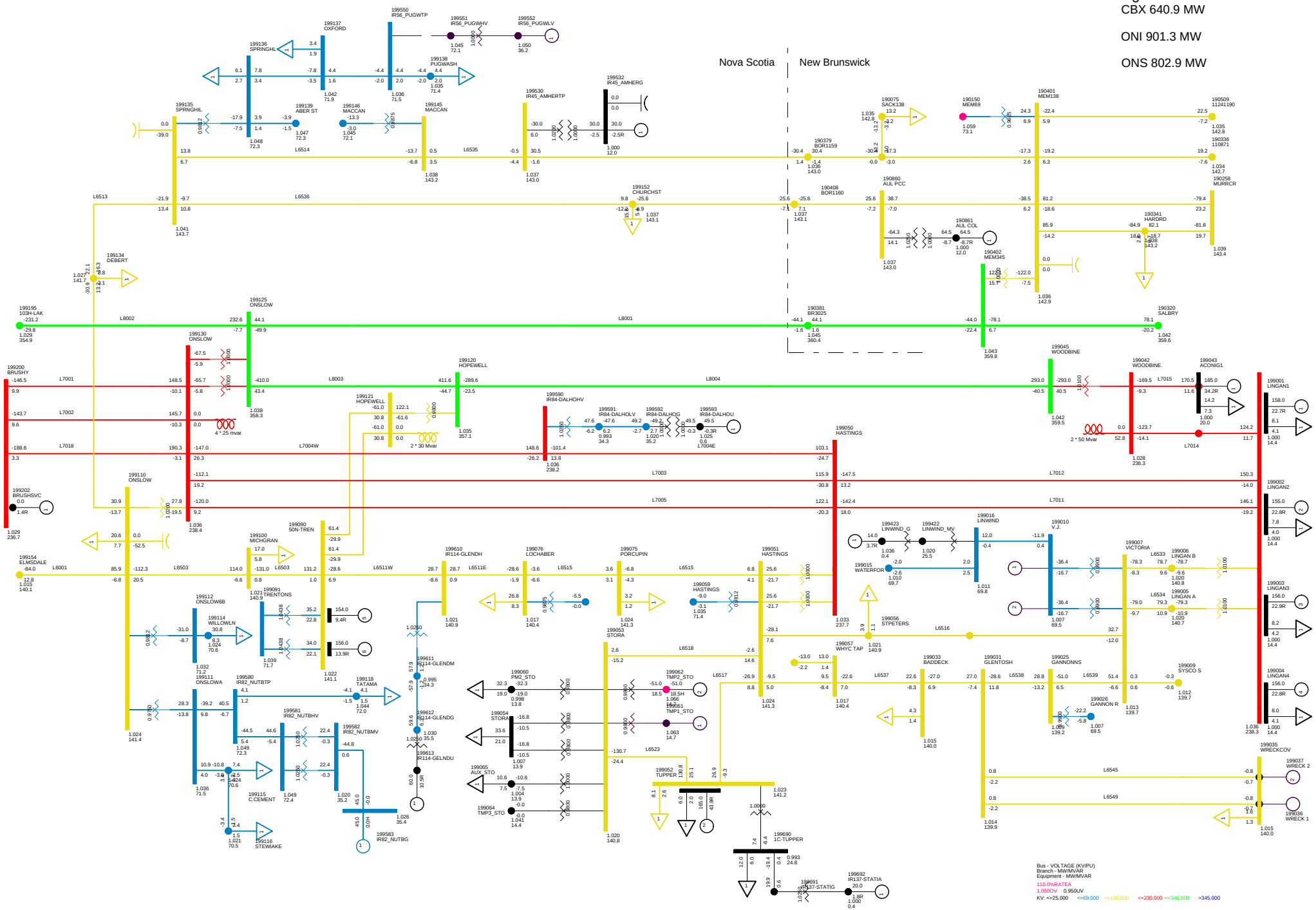

SUMMER PEAK NS-NB = 0
C53 BREAKR 47C-602 FAULT
NORTHEASTERN NS SUN, FEB 08 2009 8:33

Total Wind Gen: 105.0 MW
Gross Lingan 625.0 MW
Gross Pt Aconi 185.0 MW

Gross Tupper 165.0 MW
Gross Trenton 310.0 MW
Gross Tuft's Cove 153.2 MW

Gross Wreck Cove 0.0 MW
Gross Gas Turbine 0.0 MW
Gross Small Hydro 42.9 MW

Net Stora Load 128.0 MW
Total BMPC Load 108.5 MW

Figure ___

NSX 0.0 MW
CBX 589.6 MW
ONI 852.1 MW
ONS 802.8 MW

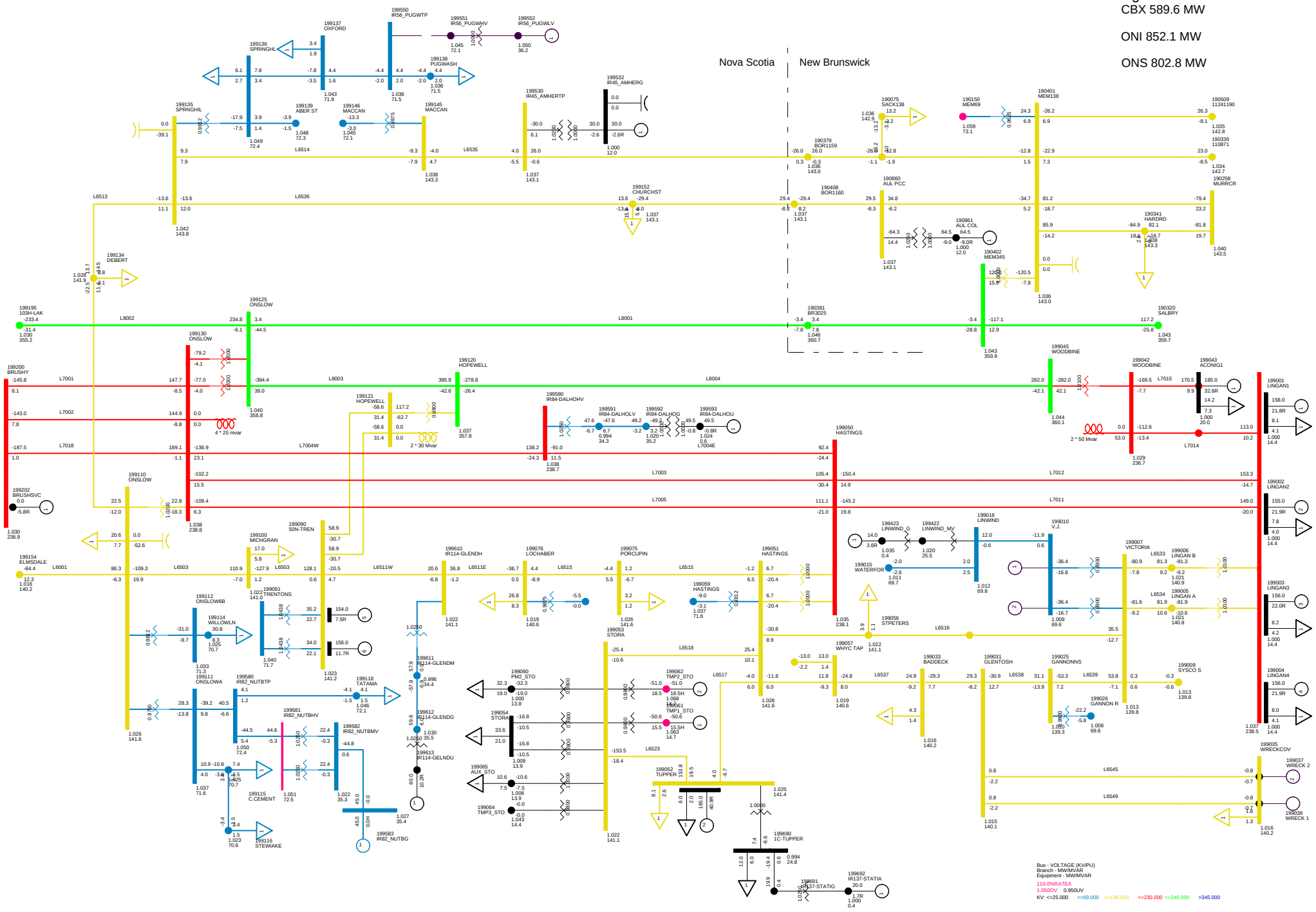

2010 SUMMER PEAK, NSLOAD=1700
NS-NB=0 NB-NE=1000; CBX=589; ONI=852 ONS=803
NORTHEASTERN NS SUN, FEB 08 2009 8:33

Total Wind Gen: 105.0 MW
Gross Lingan 625.0 MW
Gross Pt Aconi 185.0 MW

Gross Tupper 165.0 MW
Gross Trenton 310.0 MW
Gross Tuft's Cove 153.2 MW

Gross Wreck Cove 0.0 MW
Gross Gas Turbine 0.0 MW
Gross Small Hydro 42.9 MW

Net Stora Load 178.9 MW
Total BMPC Load 108.5 MW

Figure ___

NSX -23.4 MW

CBX 568.9 MW

ONI 829.0 MW

ONS 803.1 MW

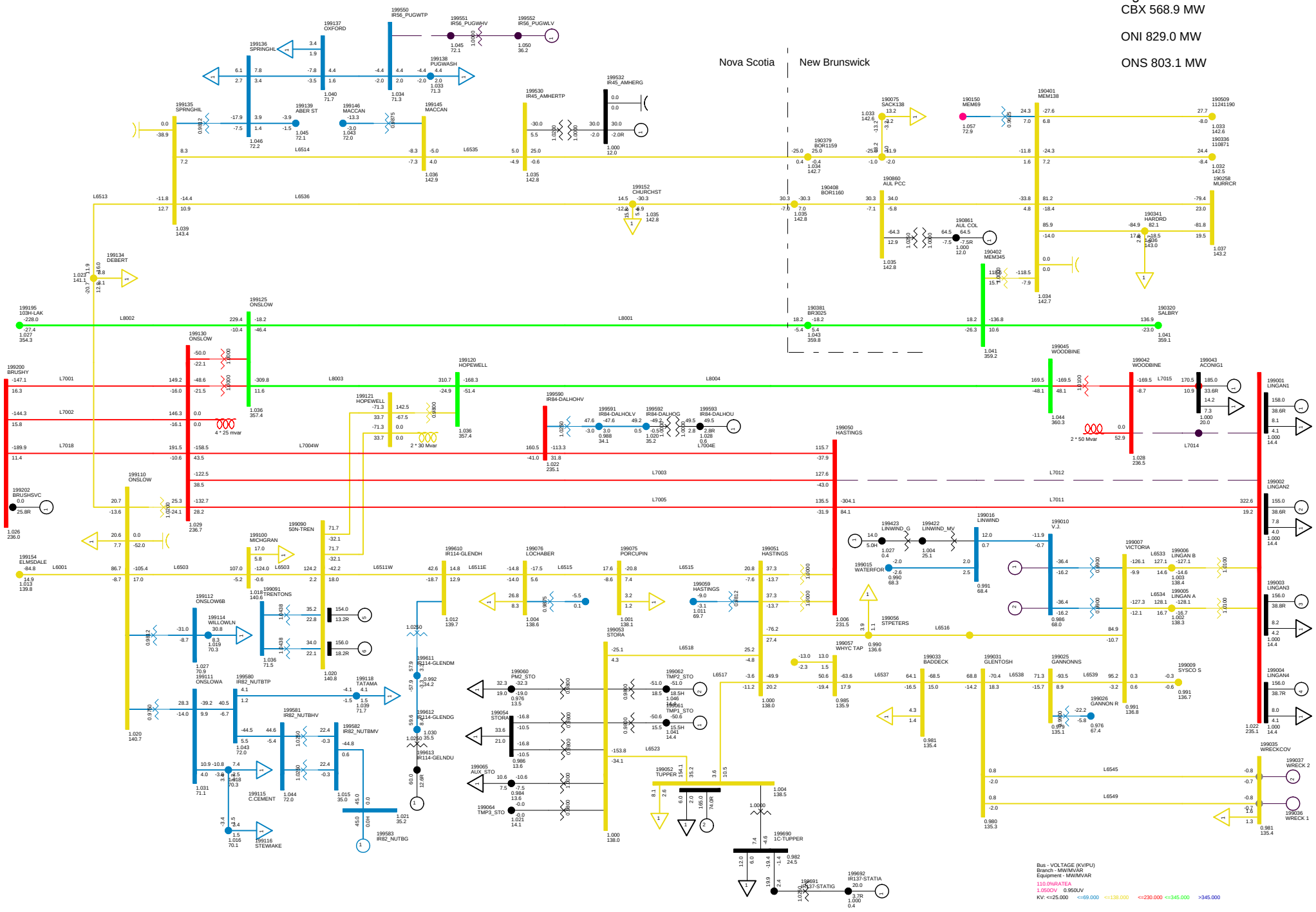

SUMMER PEAK NS-NB = 0
C54 BBU 88S-723 NO SPS
NORTHEASTERN NS SUN, FEB 08 2009 8:33

Total Wind Gen: 105.0 MW
Gross Lingan 625.0 MW
Gross Pt Aconi 185.0 MW

Gross Tupper 165.0 MW
Gross Trenton 310.0 MW
Gross Tuft's Cove 153.2 MW

Gross Wreck Cove 0.0 MW
Gross Gas Turbine 0.0 MW
Gross Small Hydro 42.9 MW

Net Stora Load 178.9 MW
Total BMPC Load 108.5 MW

Figure ___

NSX -145.0 MW

CBX 440.3 MW

ONI 707.1 MW

ONS 802.8 MW

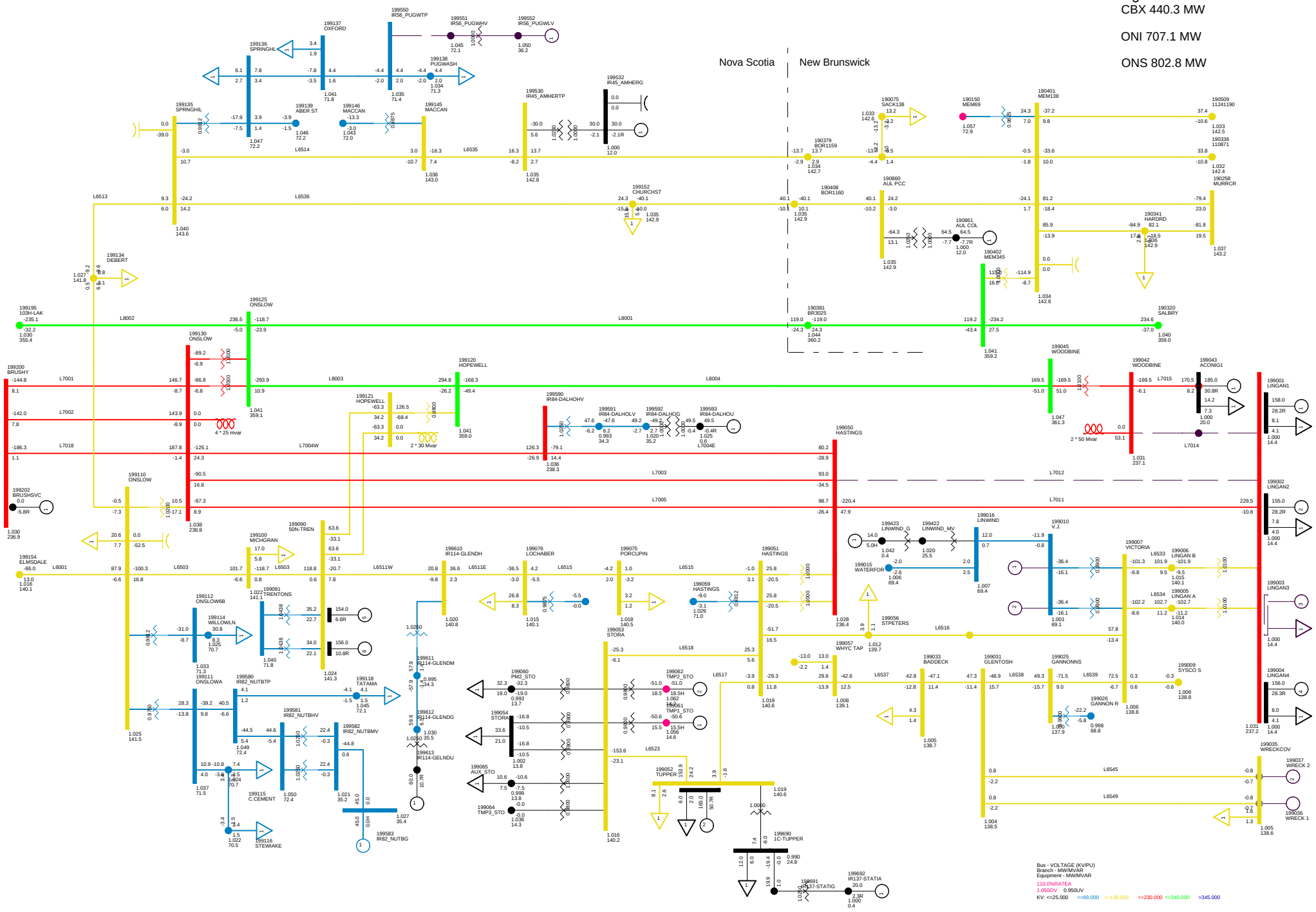
Nova Scotia
New Brunswick
199550 IR56_PUGWTP
199551 IR56_PUGWHV
199552 IR56_PUGWLV
199137 OXFORD
199136 SPRINGHL
199138 PUGWASH
199135 SPRNGHIL
199139 ABER ST
199146 MACCAN
199145 MACCAN
199530 IR45_AMHERTP
199532 IR45_AMHERG
190075 SACK138
190150 MEM69
190401 MEM138
190509 11241190
190379 BOR1159
190336 110871
190860 AUL PCC
190408 BOR1160
190258 MURRCR
199152 CHURCHST
190861 AUL CDL
190341 HARDRD
190402 MEM345
199134 DEBERT
199195 103H-LAK
199125 ONSLOW
190381 BR3025
190320 SALBRY
199130 ONSLOW
199120 HOPEWELL
199045 WOODBINE
199042 WOODBINE
199043 ACONIG1
199200 BRUSHY
199121 HOPEWELL
199590 IR84-DALHOHV
199591 IR84-DALHOLV
199592 IR84-DALHOG
199593 IR84-DALHOU
199050 HASTINGS
199001 LINGAN1
199002 LINGAN2
199003 LINGAN3
199004 LINGAN4
199202 BRUSHSVC
199110 ONSLOW
199090 50N-TREN
199100 MICHGRAN
199423 LINWIND_G
199422 LINWIND_MV
199016 LINWIND
199010 V.J.
199007 VICTORIA
199006 LINGAN B
199005 LINGAN A
199009 SYSCO S
199154 ELMSDALE
199610 IR114-GLENDH
199076 LOCHABER
199075 PORCUPIN
199051 HASTINGS
199015 WATERFOR
199056 STPETERS
199057 WHYC TAP
199033 BADDECK
199031 GLENTOSH
199025 GANNONNS
199026 GANNON R
199112 ONSLOW6B
199114 WILLOWLN
199091 TRENTONS
199111 ONSLOWA
199580 IR82_NUTBTP
199581 IR82_NUTBHV
199582 IR82_NUTBMV
199118 TATAMA
199611 IR114-GLENDM
199612 IR114-GLENDG
199613 IR114-GELNDU
199583 IR82_NUTBG
199115 C.CEMENT
199116 STEWIAKE
199060 PM2_STO
199054 STORA
199065 AUX_STO
199064 TMP3_STO
199053 STORA
199062 TMP2_STO
199061 TMP1_STO
199052 TUPPER
199690 1C-TUPPER
199691 IR137-STATIG
199692 IR137-STATIA
199035 WRECKCOV
199037 WRECK 2
199036 WRECK 1
L6001
L6002
L6003
L6004
L6005
L6007
L6008
L6009
L6010
L6011
L6012
L6013
L6014
L6015
L6016
L6017
L6018
L6023
L6024
L6025
L6026
L6027
L6028
L6029
L6030
L6031
L6032
L6033
L6034
L6035
L6036
L6037
L6038
L6039
L6040
L6041
L6042
L6043
L6044
L6045
L6046
L6047
L6048
L6049
L6050
L6051
L6052
L6053
L6054
L6055
L6056
L6057
L6058
L6059
L6060
L6061
L6062

NSX -8.1 MW

CBX 590.5 MW

ONI 848.8 MW

ONS 807.6 MW

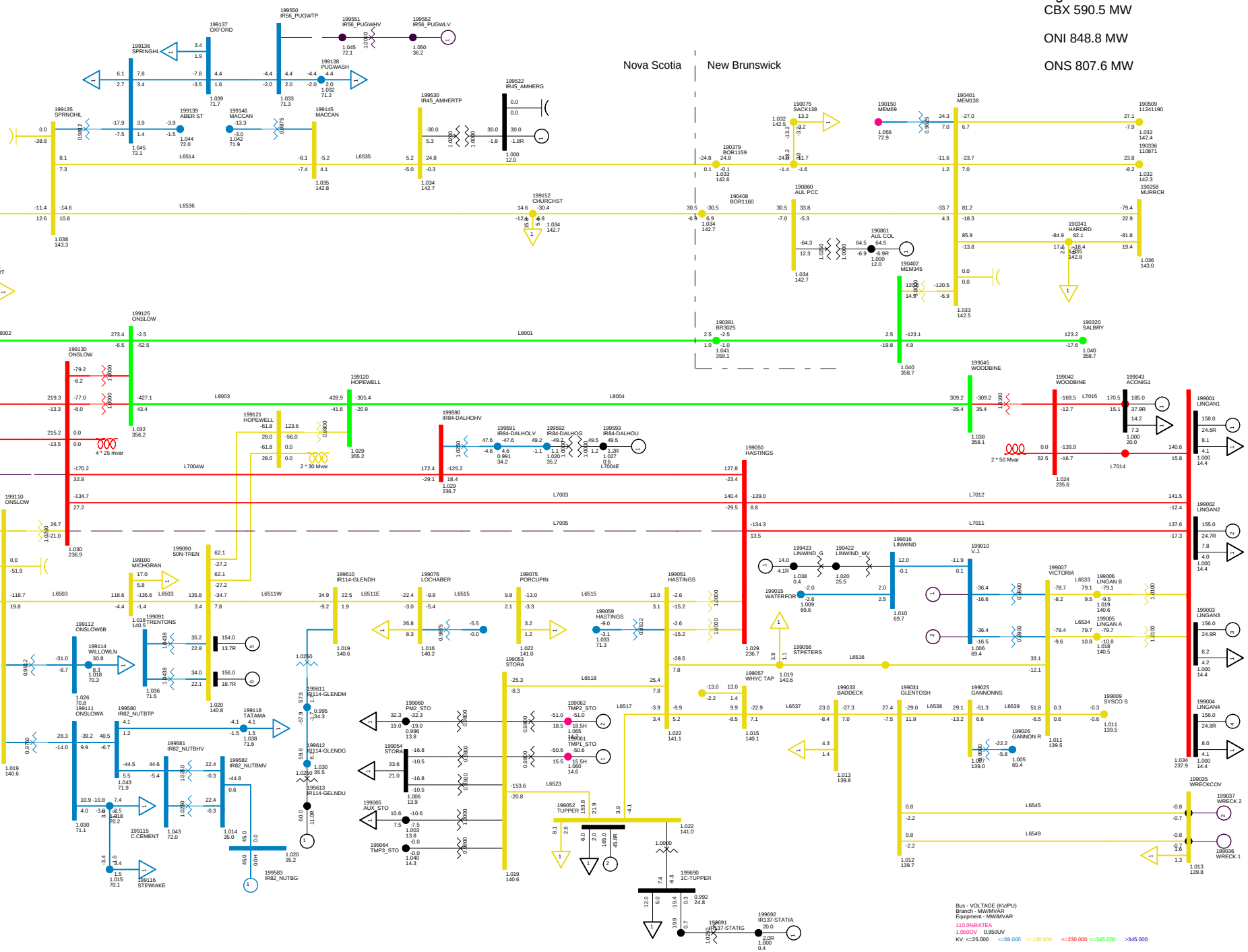

SUMMER PEAK NS-NB = 0
C55 BBU 67N-712
NORTHEASTERN NS SUN, FEB 08 2009 8:33

Total Wind Gen: 105.0 MW
Gross Lingan 625.0 MW
Gross Pt Aconi 185.0 MW

Gross Tupper 165.0 MW
Gross Trenton 310.0 MW
Gross Tuft's Cove 153.2 MW

Gross Wreck Cove 0.0 MW
Gross Gas Turbine 0.0 MW
Gross Small Hydro 42.9 MW

Net Stora Load 178.9 MW
Total BMPC Load 108.5 MW

Figure ___

NSX -38.0 MW

CBX 578.0 MW

ONI 818.0 MW

ONS 805.7 MW

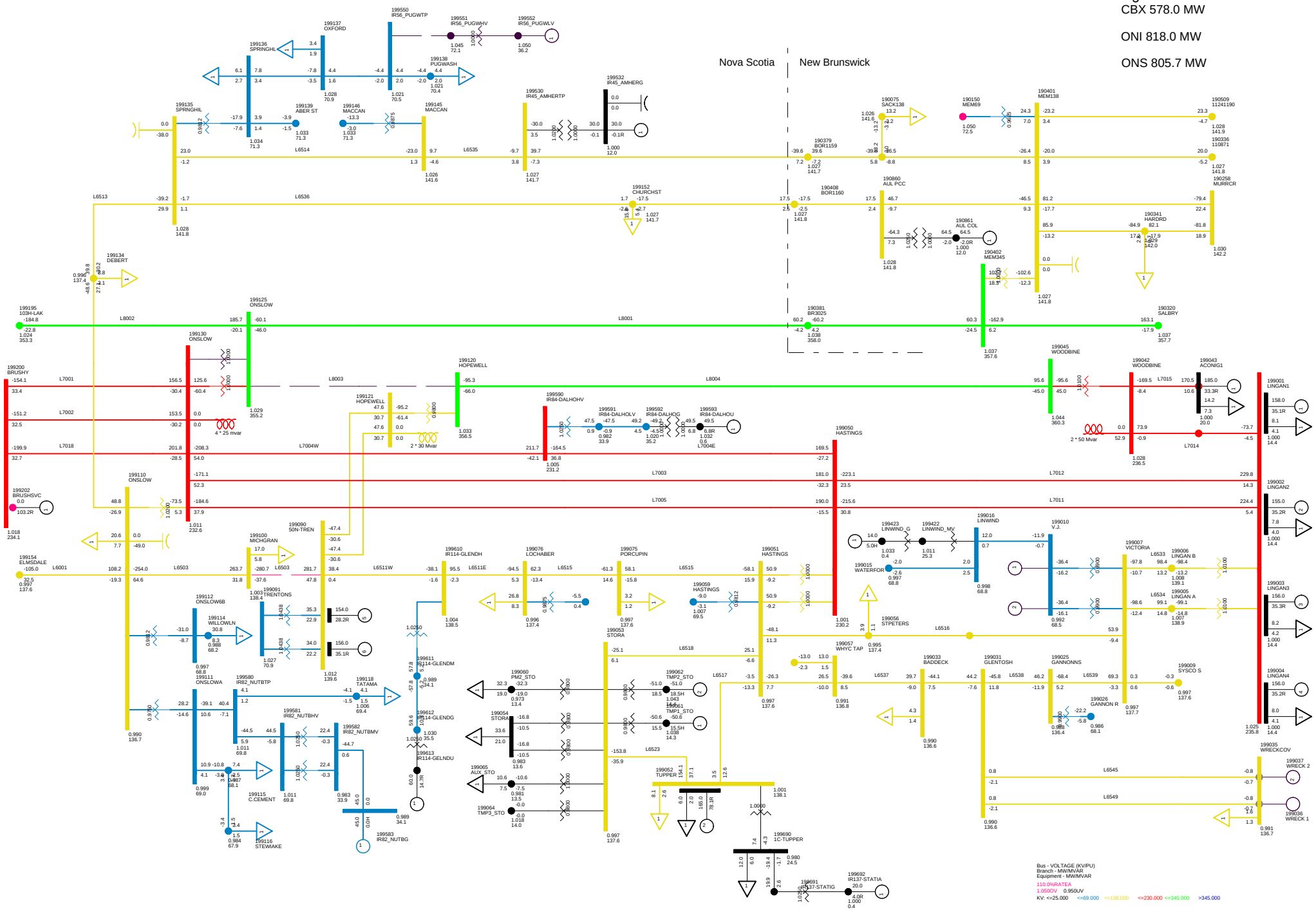

SUMMER PEAK NS-NB = 0
C56 BBU 67N-811 L8003 + T82 NO SPS
NORTHEASTERN NS SUN, FEB 08 2009 8:33

Total Wind Gen: 105.0 MW
Gross Lingan 625.0 MW
Gross Pt Aconi 185.0 MW

Gross Tupper 165.0 MW
Gross Trenton 310.0 MW
Gross Tuft's Cove 153.2 MW

Gross Wreck Cove 0.0 MW
Gross Gas Turbine 0.0 MW
Gross Small Hydro 42.9 MW

Net Stora Load 178.9 MW
Total BMPC Load 108.5 MW

Figure ___

NSX -161.2 MW

CBX 441.2 MW

ONI 692.8 MW

ONS 804.5 MW

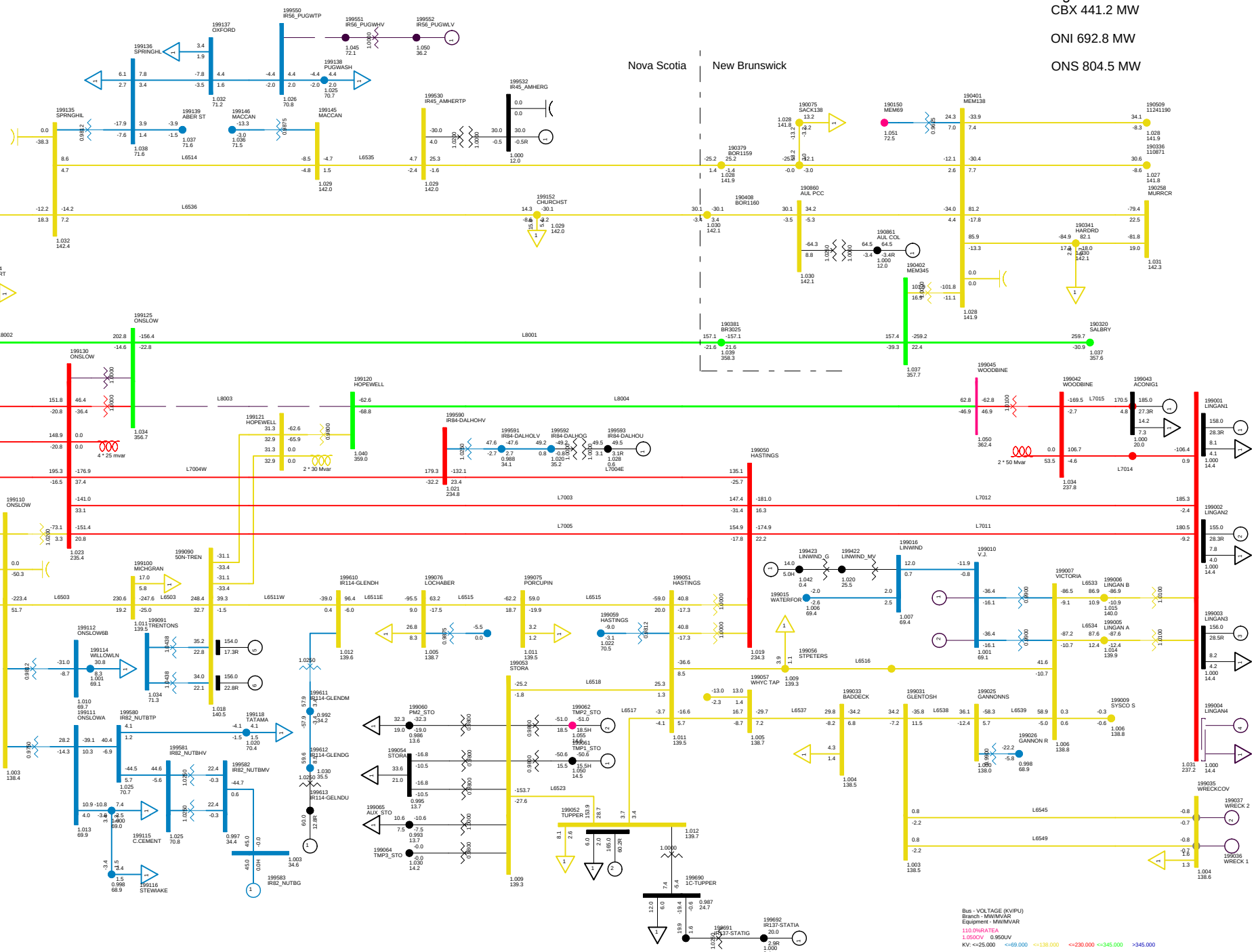

SUMMER PEAK NS-NB = 0
C56S BBU 67N-811 L8003 + T82 1 UNIT SPS
NORTHEASTERN NS SUN, FEB 08 2009 8:34

Total Wind Gen: 105.0 MW
Gross Lingan 469.0 MW
Gross Pt Aconi 185.0 MW

Gross Tupper 165.0 MW
Gross Trenton 310.0 MW
Gross Tuft's Cove 153.2 MW

Gross Wreck Cove 0.0 MW
Gross Gas Turbine 0.0 MW
Gross Small Hydro 42.9 MW

Net Stora Load 178.9 MW
Total BMPC Load 108.5 MW

Figure ___

NSX -289.9 MW

CBX 303.0 MW

ONI 563.4 MW

ONS 803.9 MW

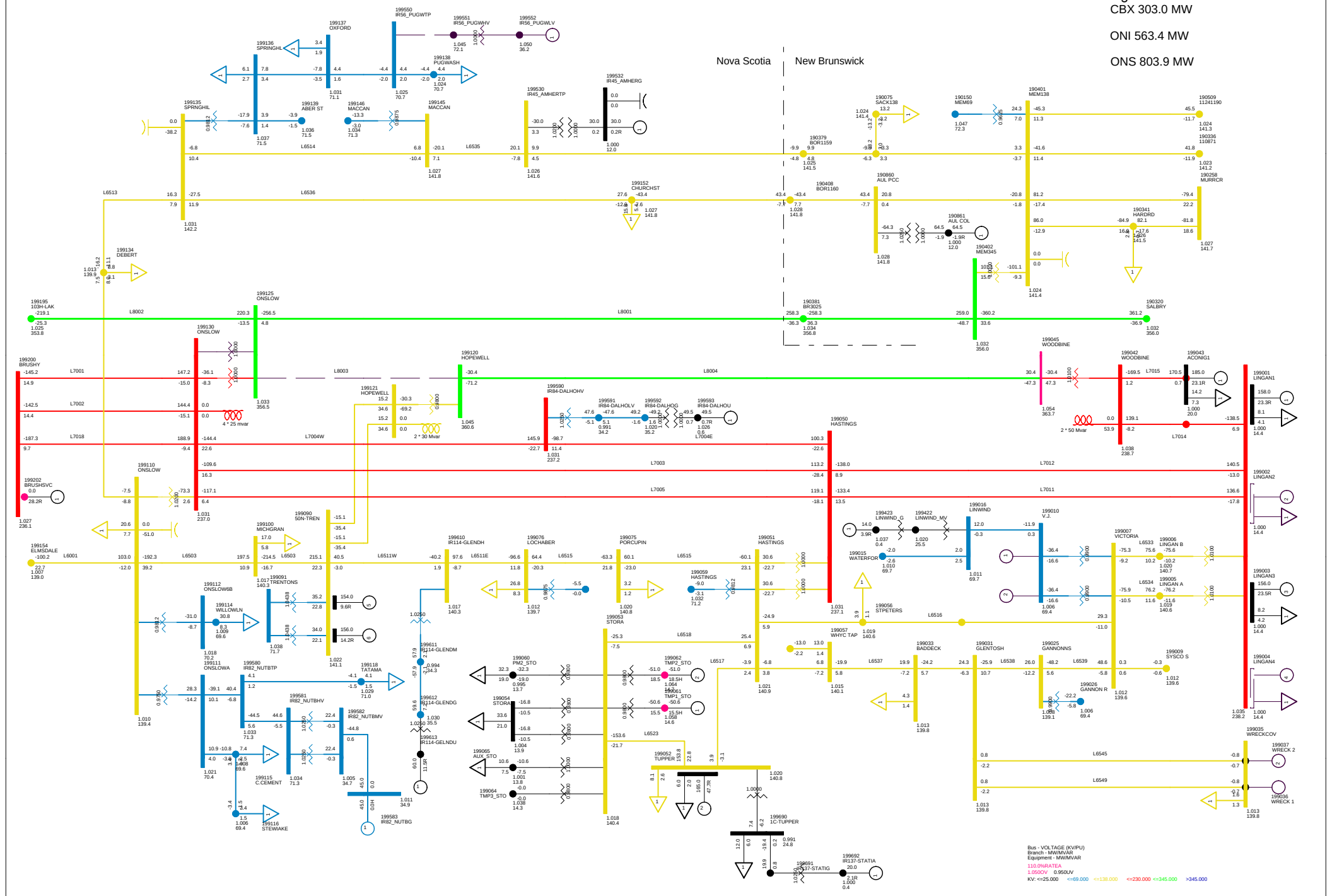

SUMMER PEAK NS-NB = 0
C56SS BBU 67N-811 L8003 + T82 2 UNIT SPS
NORTHEASTERN NS SUN, FEB 08 2009 8:34

Total Wind Gen: 105.0 MW
Gross Lingan 314.0 MW
Gross Pt Aconi 185.0 MW

Gross Tupper 165.0 MW
Gross Trenton 310.0 MW
Gross Tuft's Cove 153.2 MW

Gross Wreck Cove 0.0 MW
Gross Gas Turbine 0.0 MW
Gross Small Hydro 42.9 MW

Net Stora Load 178.9 MW
Total BMPC Load 108.5 MW

Figure ___

NSX -48.5 MW

CBX 577.7 MW

ONI 817.0 MW

ONS 815.7 MW

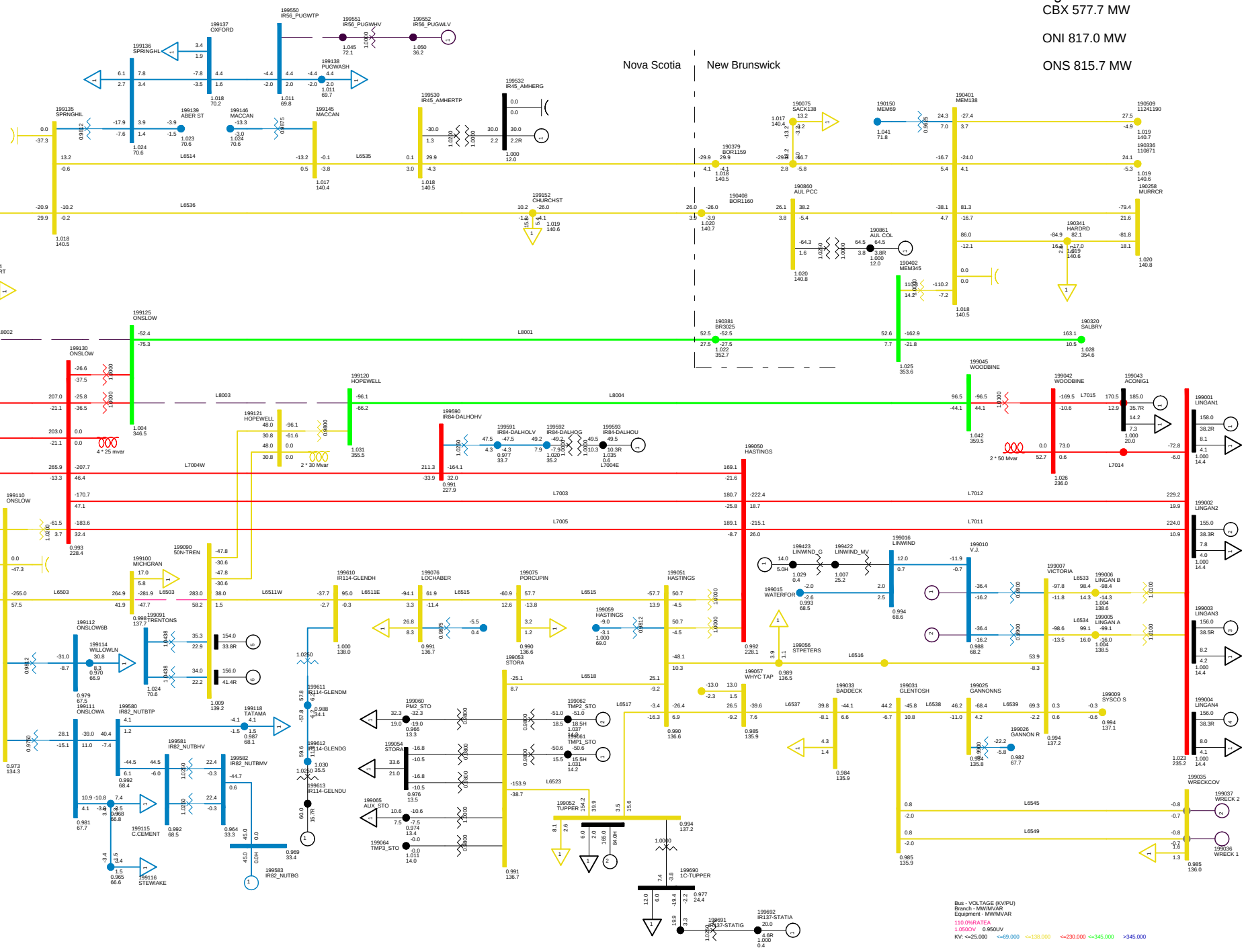

SUMMER PEAK NS-NB = 0
C57 BBU 67N-812 L8003+L8002 NO SPS
NORTHEASTERN NS SUN, FEB 08 2009 8:34

Total Wind Gen: 105.0 MW
Gross Lingan 625.0 MW
Gross Pt Aconi 185.0 MW

Gross Tupper 165.0 MW
Gross Trenton 310.0 MW
Gross Tuft's Cove 153.2 MW

Gross Wreck Cove 0.0 MW
Gross Gas Turbine 0.0 MW
Gross Small Hydro 42.9 MW

Net Stora Load 178.9 MW
Total BMPC Load 108.5 MW

Figure ___

NSX -171.2 MW

CBX 441.2 MW

ONI 692.6 MW

ONS 814.3 MW

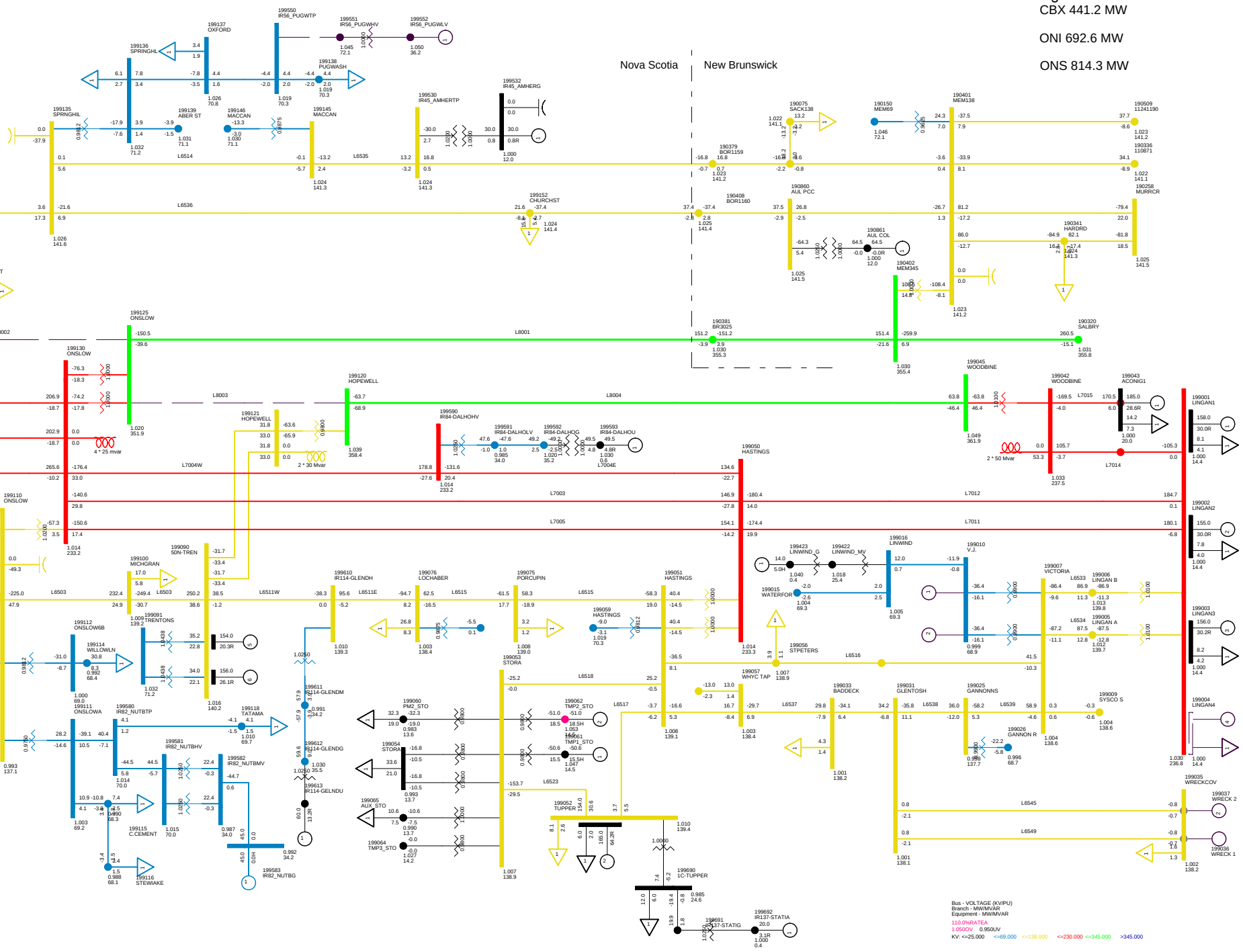

SUMMER PEAK NS-NB = 0
C57S BBU 67N-812 1-UNIT SPS
NORTHEASTERN NS SUN, FEB 08 2009 8:34

Total Wind Gen: 105.0 MW
Gross Lingan 469.0 MW
Gross Pt Aconi 185.0 MW

Gross Tupper 165.0 MW
Gross Trenton 310.0 MW
Gross Tuft's Cove 153.2 MW

Gross Wreck Cove 0.0 MW
Gross Gas Turbine 0.0 MW
Gross Small Hydro 42.9 MW

Net Stora Load 178.9 MW
Total BMPC Load 108.5 MW

Figure ___

NSX -300.2 MW

CBX 303.1 MW

ONI 563.3 MW

ONS 813.7 MW

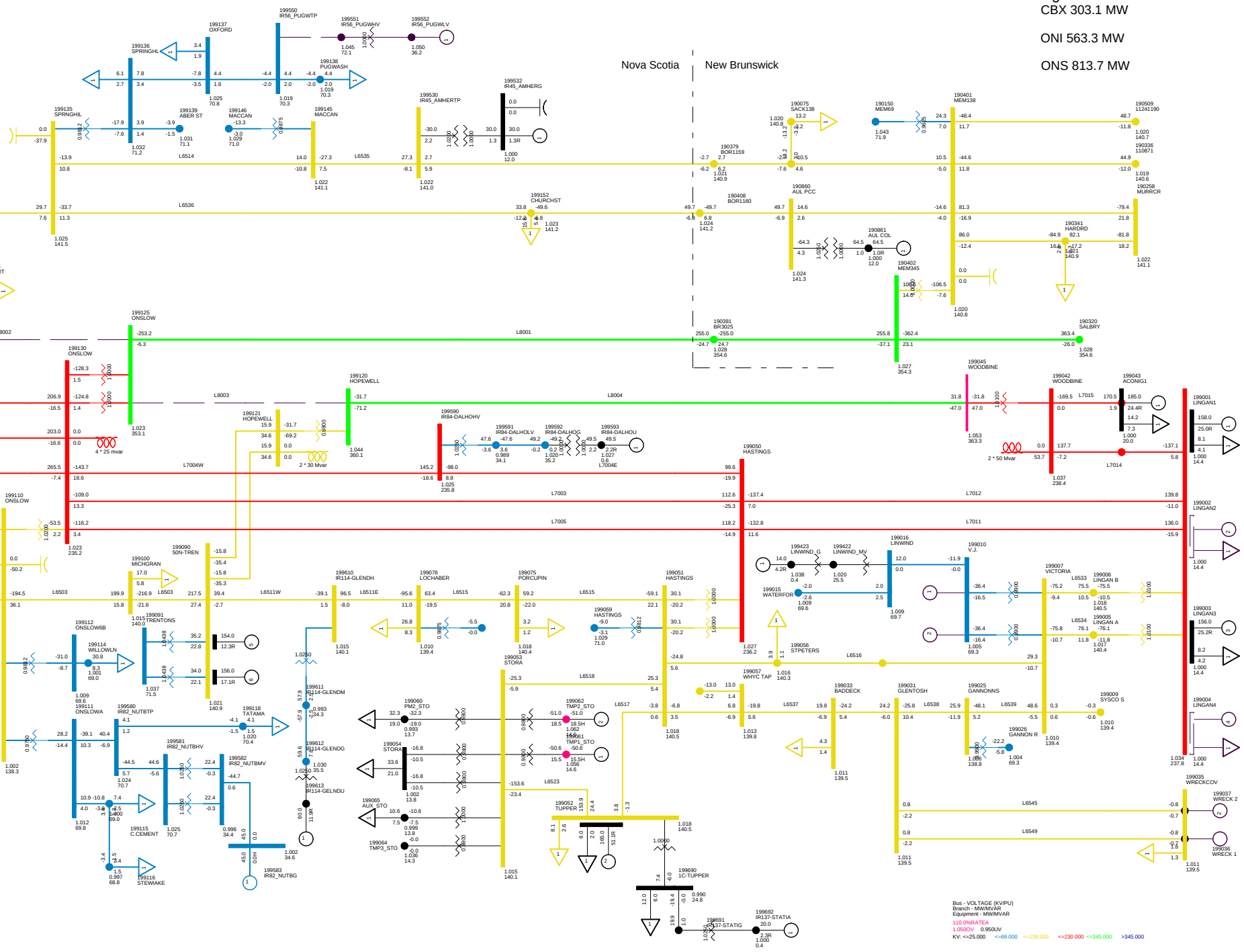

SUMMER PEAK NS-NB = 0
C57SS BBU 67N-812 2-UNIT SPS
NORTHEASTERN NS SUN, FEB 08 2009 8:34

Total Wind Gen: 105.0 MW
Gross Lingan 314.0 MW
Gross Pt Aconi 185.0 MW

Gross Tupper 165.0 MW
Gross Trenton 310.0 MW
Gross Tuft's Cove 153.2 MW

Gross Wreck Cove 0.0 MW
Gross Gas Turbine 0.0 MW
Gross Small Hydro 42.9 MW

Net Stora Load 178.9 MW
Total BMPC Load 108.5 MW

Figure ___

NSX -45.9 MW

CBX 568.0 MW

ONI 809.4 MW

ONS 805.5 MW

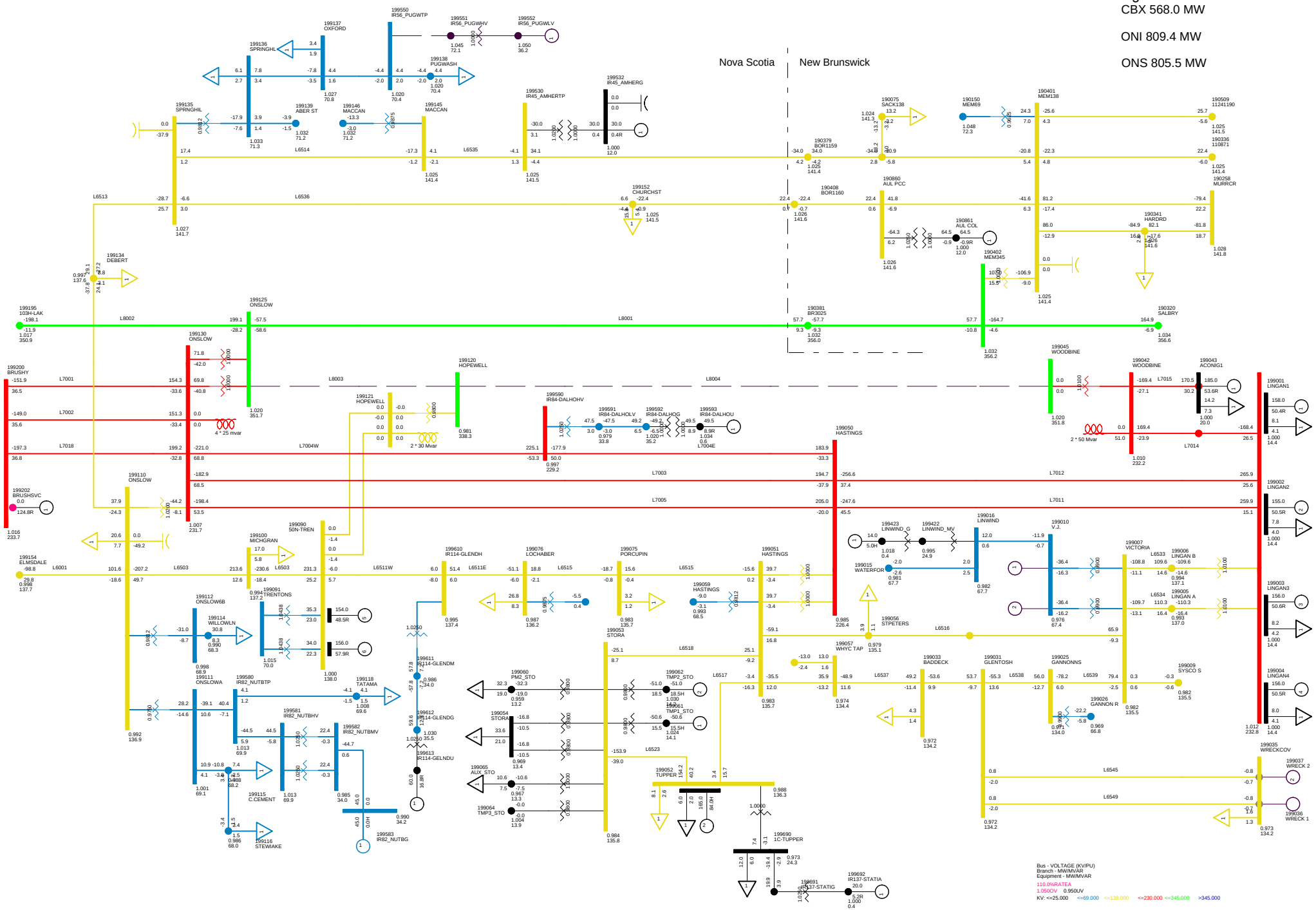

SUMMER PEAK NS-NB = 0
C58 BBU 79N-810 NO SPS
NORTHEASTERN NS SUN, FEB 08 2009 8:35

Total Wind Gen: 105.0 MW
Gross Lingan 625.0 MW
Gross Pt Aconi 185.0 MW

Gross Tupper 165.0 MW
Gross Trenton 310.0 MW
Gross Tuft's Cove 153.2 MW

Gross Wreck Cove 0.0 MW
Gross Gas Turbine 0.0 MW
Gross Small Hydro 42.9 MW

Net Stora Load 179.0 MW
Total BMPC Load 108.5 MW

Figure ___

NSX -164.9 MW

CBX 436.0 MW

ONI 689.0 MW

ONS 804.4 MW

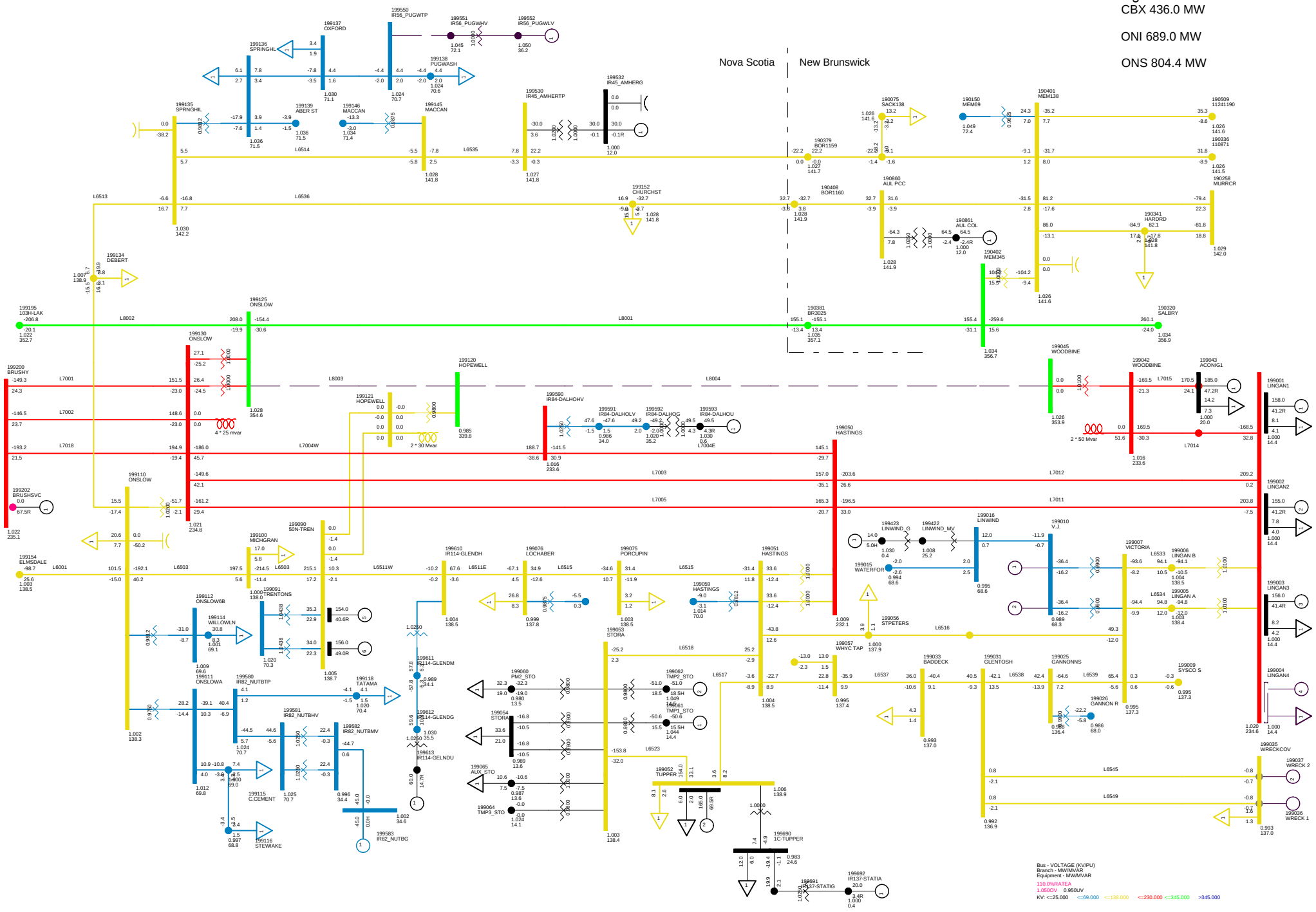

SUMMER PEAK NS-NB = 0
C58S BBU 79N-810 1-UNIT SPS
NORTHEASTERN NS SUN, FEB 08 2009 8:35

Total Wind Gen: 105.0 MW
Gross Lingan 469.0 MW
Gross Pt Aconi 185.0 MW

Gross Tupper 165.0 MW
Gross Trenton 310.0 MW
Gross Tuft's Cove 153.2 MW

Gross Wreck Cove 0.0 MW
Gross Gas Turbine 0.0 MW
Gross Small Hydro 42.9 MW

Net Stora Load 178.9 MW
Total BMPC Load 108.5 MW

Figure ___

NSX -291.4 MW

CBX 300.9 MW

ONI 562.0 MW

ONS 804.0 MW

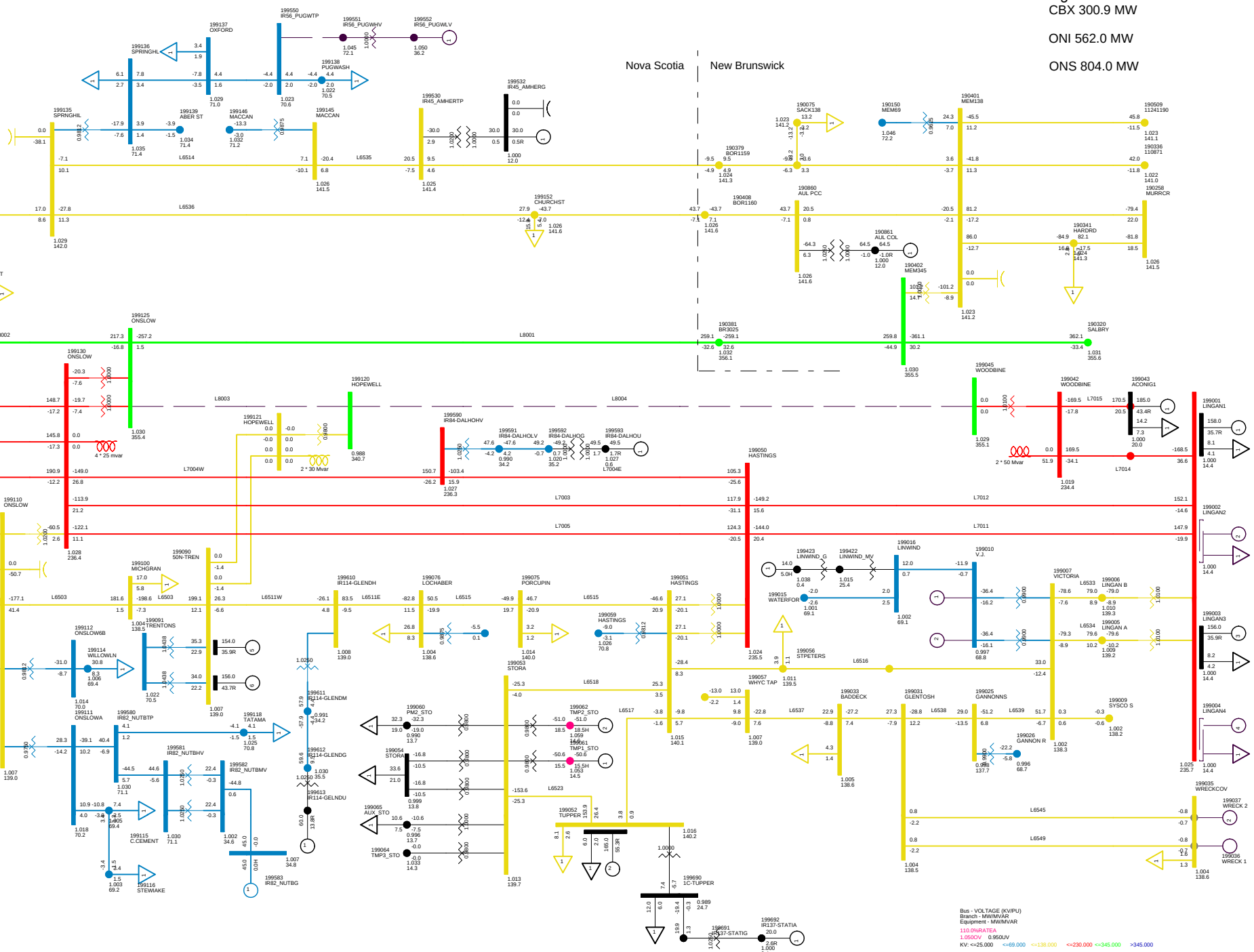

SUMMER PEAK NS-NB = 0
C58SS BBU 79N-810 2-UNIT SPS
NORTHEASTERN NS SUN, FEB 08 2009 8:35

Total Wind Gen: 105.0 MW
Gross Lingan 314.0 MW
Gross Pt Aconi 185.0 MW

Gross Tupper 165.0 MW
Gross Trenton 310.0 MW
Gross Tuft's Cove 153.2 MW

Gross Wreck Cove 0.0 MW
Gross Gas Turbine 0.0 MW
Gross Small Hydro 42.9 MW

Net Stora Load 178.9 MW
Total BMPC Load 108.5 MW

Figure ___

NSX -274.1 MW

CBX 307.5 MW

ONI 578.3 MW

ONS 802.7 MW

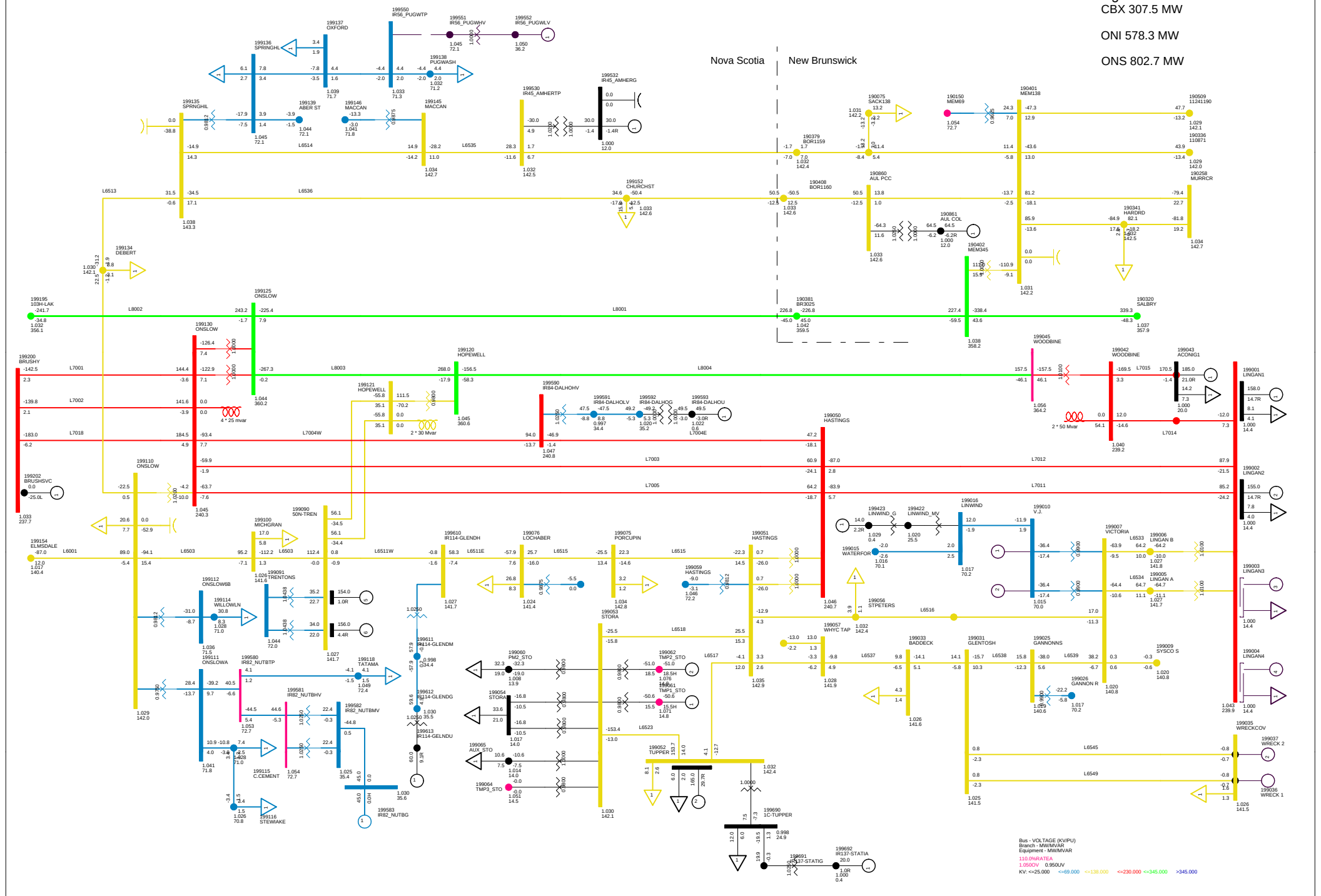

SUMMER PEAK NS-NB = 0
C59 BBU 88S-721 TRIP LINGAN 3 AND 4
NORTHEASTERN NS SUN, FEB 08 2009 8:35

Total Wind Gen: 105.0 MW
Gross Lingan 313.0 MW
Gross Pt Aconi 185.0 MW

Gross Tupper 165.0 MW
Gross Trenton 310.0 MW
Gross Tuft's Cove 153.2 MW

Gross Wreck Cove 0.0 MW
Gross Gas Turbine 0.0 MW
Gross Small Hydro 42.9 MW

Net Stora Load 178.9 MW
Total BMPC Load 108.5 MW

Figure ___

NSX -1.2 MW

CBX 591.4 MW

ONI 851.2 MW

ONS 803.0 MW

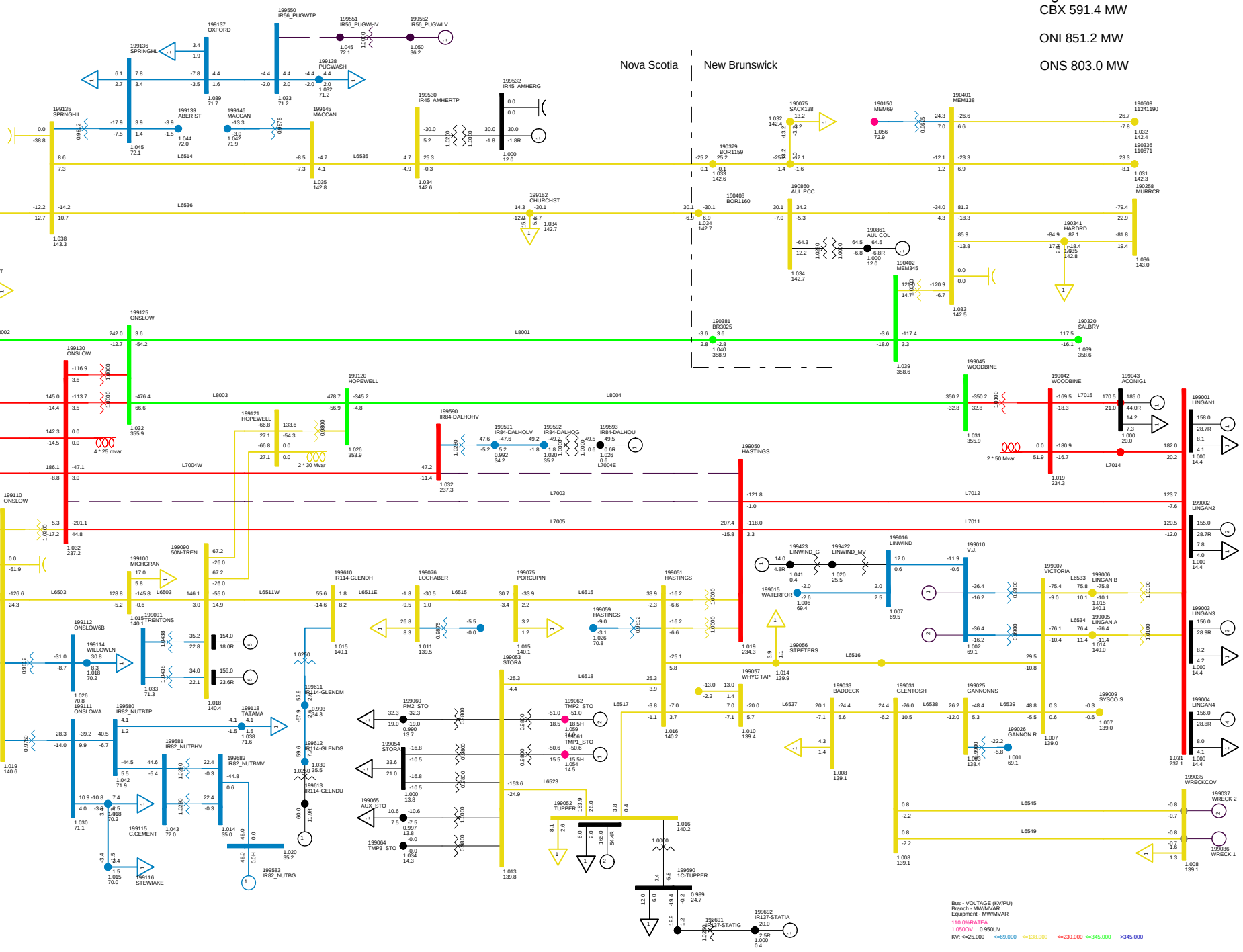

SUMMER PEAK NS-NB = 0
C60 DCT ON L7003+L7004
NORTHEASTERN NS SUN, FEB 08 2009 8:35

Total Wind Gen: 105.0 MW
Gross Lingan 625.0 MW
Gross Pt Aconi 185.0 MW

Gross Tupper 165.0 MW
Gross Trenton 310.0 MW
Gross Tuft's Cove 153.2 MW

Gross Wreck Cove 0.0 MW
Gross Gas Turbine 0.0 MW
Gross Small Hydro 42.9 MW

Net Stora Load 178.9 MW
Total BMPC Load 108.5 MW

Figure ___

NSX 53.4 MW

CBX 567.4 MW

ONI 800.8 MW

ONS 804.8 MW

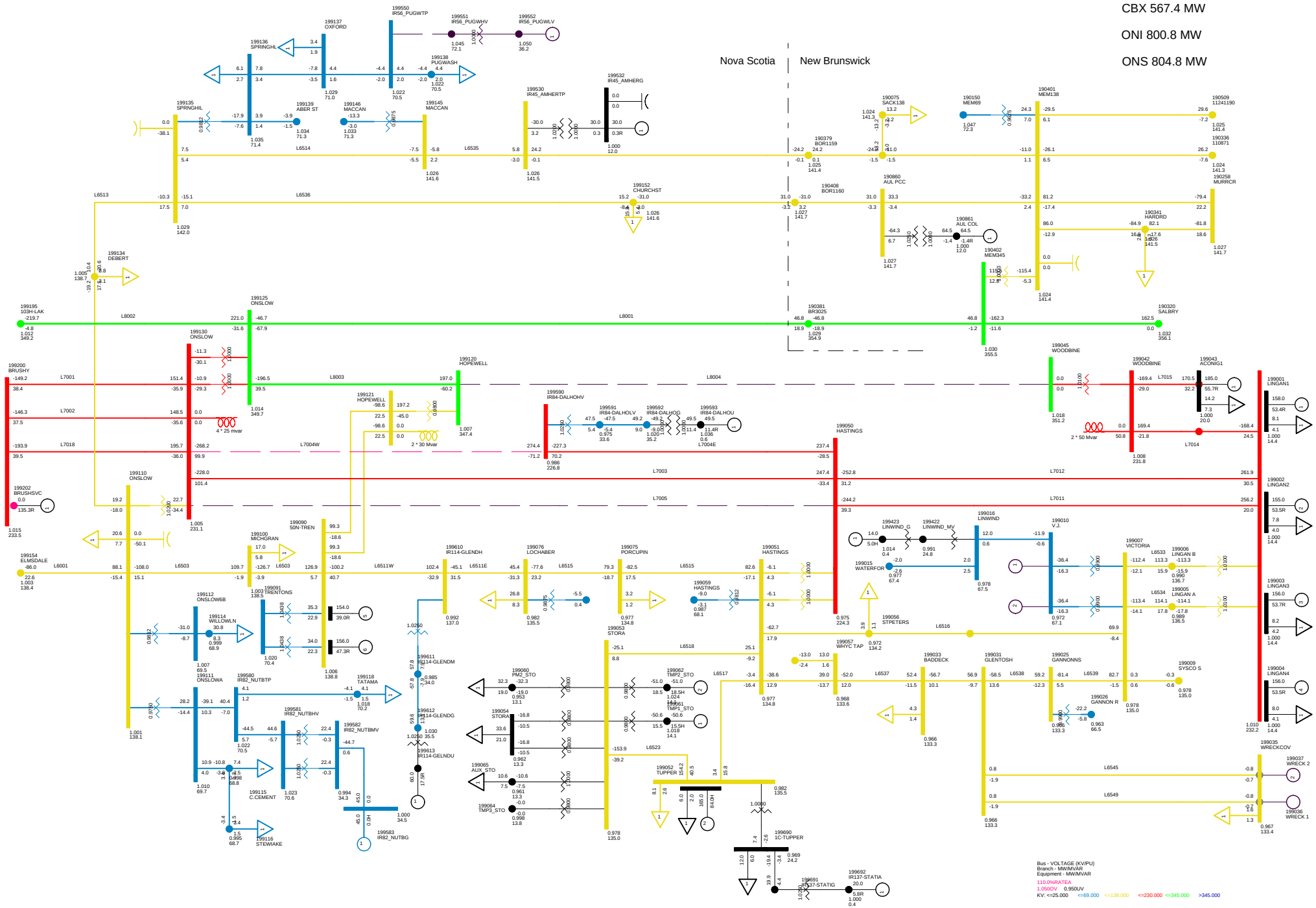

SUMMER PEAK NS-NB = 0
C61 DCT ON STRAIT CROSSING LOSE L8004-L7005 NO SPS
NORTHEASTERN NS SUN, FEB 08 2009 8:36

Total Wind Gen: 105.0 MW
Gross Lingan 625.0 MW
Gross Pt Aconi 185.0 MW

Gross Tupper 165.0 MW
Gross Trenton 310.0 MW
Gross Tuft's Cove 153.2 MW

Gross Wreck Cove 0.0 MW
Gross Gas Turbine 0.0 MW
Gross Small Hydro 42.9 MW

Net Stora Load 179.0 MW
Total BMPC Load 108.5 MW

Figure ___

CBX 436.5 MW

ONI 687.4 MW

ONS 803.8 MW

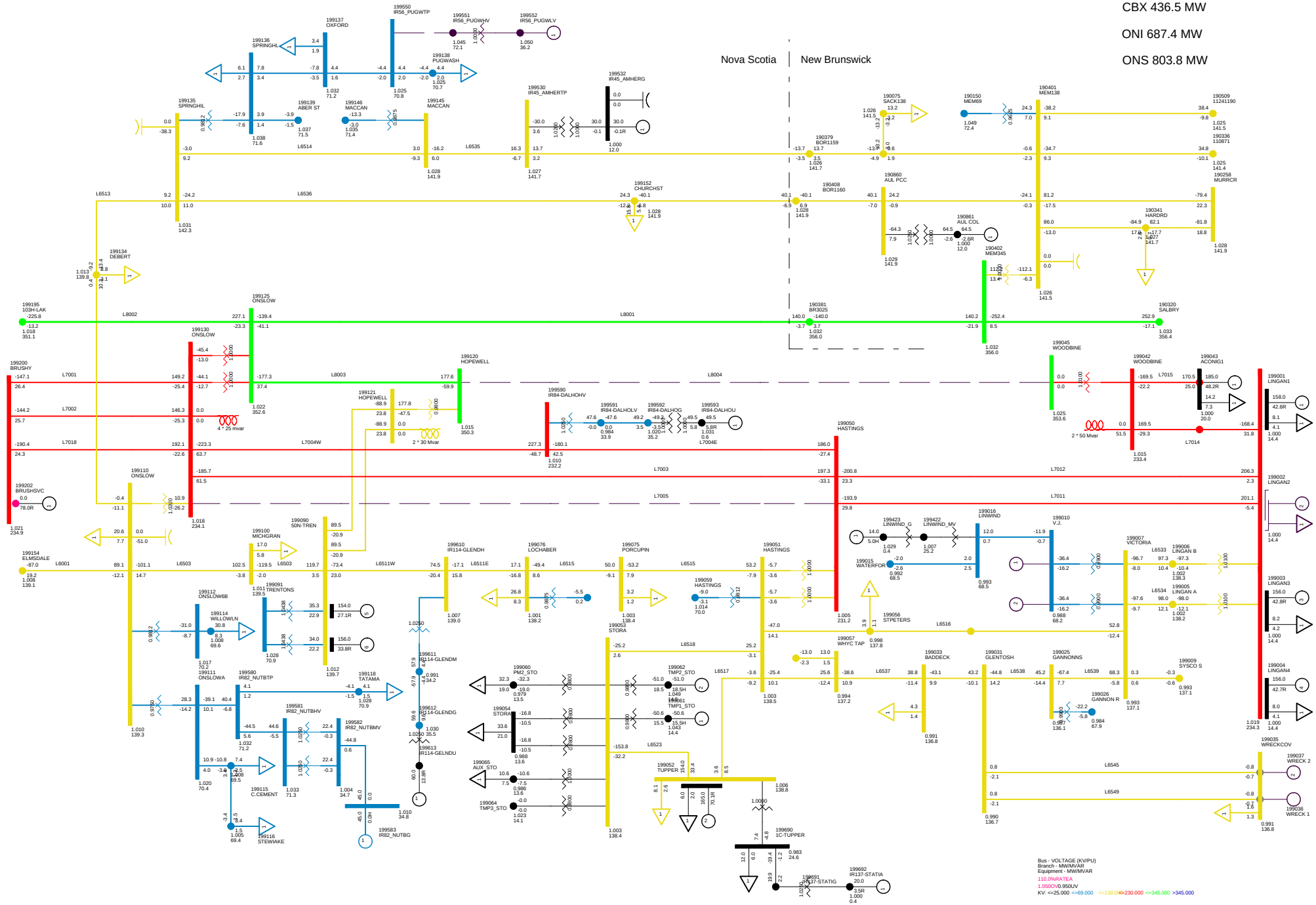

SUMMER PEAK NS-NB = 0
C61S DCT ON STRAIT CROSSING L8004-L7005 WITH 1-UNIT SPS
NORTHEASTERN NS SUN, FEB 08 2009 8:36

Total Wind Gen: 105.0 MW
Gross Lingan 470.0 MW
Gross Pt Aconi 185.0 MW

Gross Tupper 165.0 MW
Gross Trenton 310.0 MW
Gross Tuft's Cove 153.2 MW

Gross Wreck Cove 0.0 MW
Gross Gas Turbine 0.0 MW
Gross Small Hydro 42.9 MW

Net Stora Load 178.9 MW
Total BMPC Load 108.5 MW

Figure ___

NSX -274.1 MW

CBX 307.5 MW

ONI 578.3 MW

ONS 802.7 MW

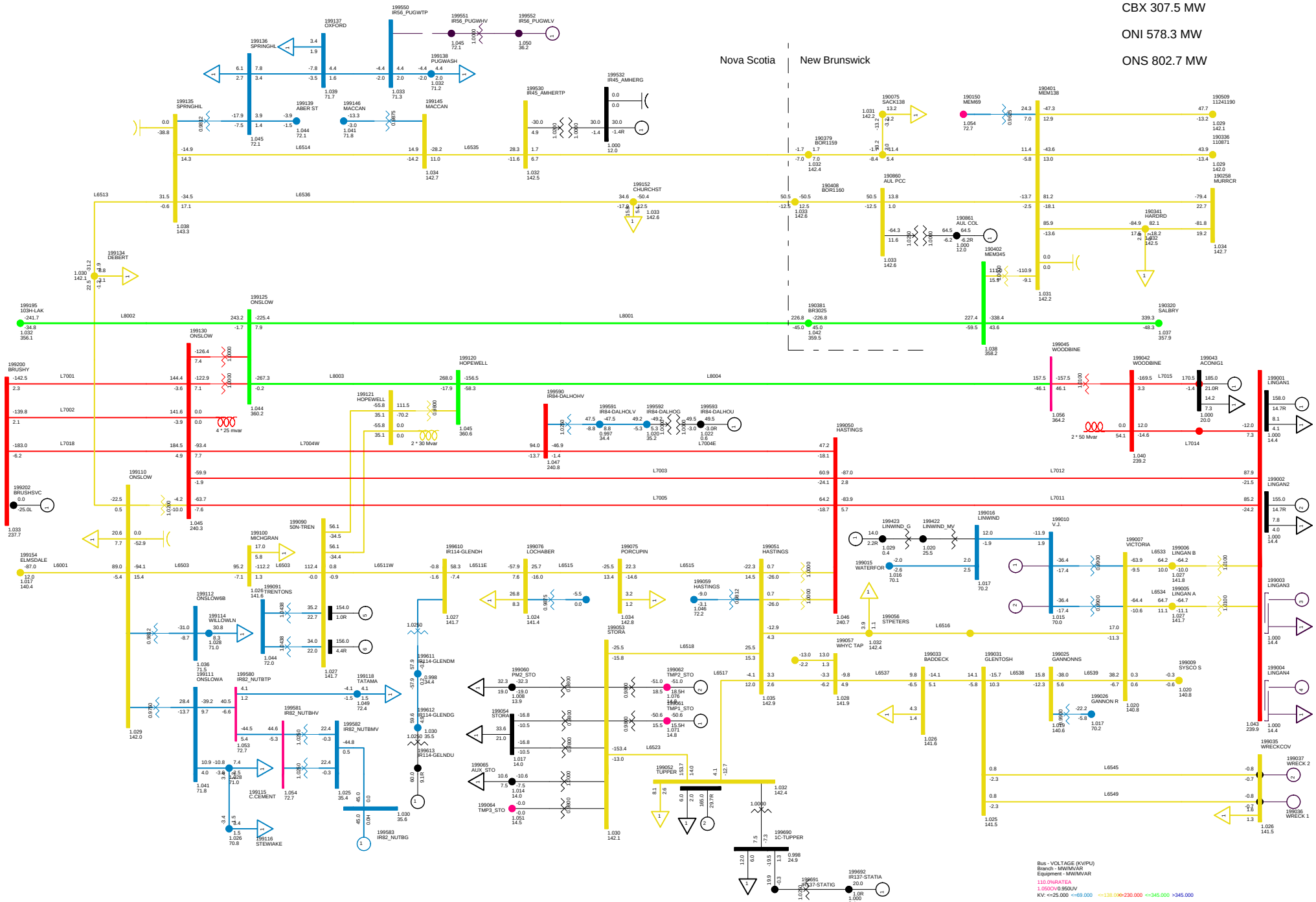

SUMMER PEAK NS-NB = 0
C62 FAULT ON BREAKER 88S-721 TRIPS LINGAN 3 AND 4
NORTHEASTERN NS SUN, FEB 08 2009 8:36

Total Wind Gen: 105.0 MW
Gross Lingan 313.0 MW
Gross Pt Aconi 185.0 MW

Gross Tupper 165.0 MW
Gross Trenton 310.0 MW
Gross Tuft's Cove 153.2 MW

Gross Wreck Cove 0.0 MW
Gross Gas Turbine 0.0 MW
Gross Small Hydro 42.9 MW

Net Stora Load 178.9 MW
Total BMPC Load 108.5 MW

Figure ___

NSX -0.0 MW

CBX 589.6 MW

ONI 852.2 MW

ONS 802.9 MW

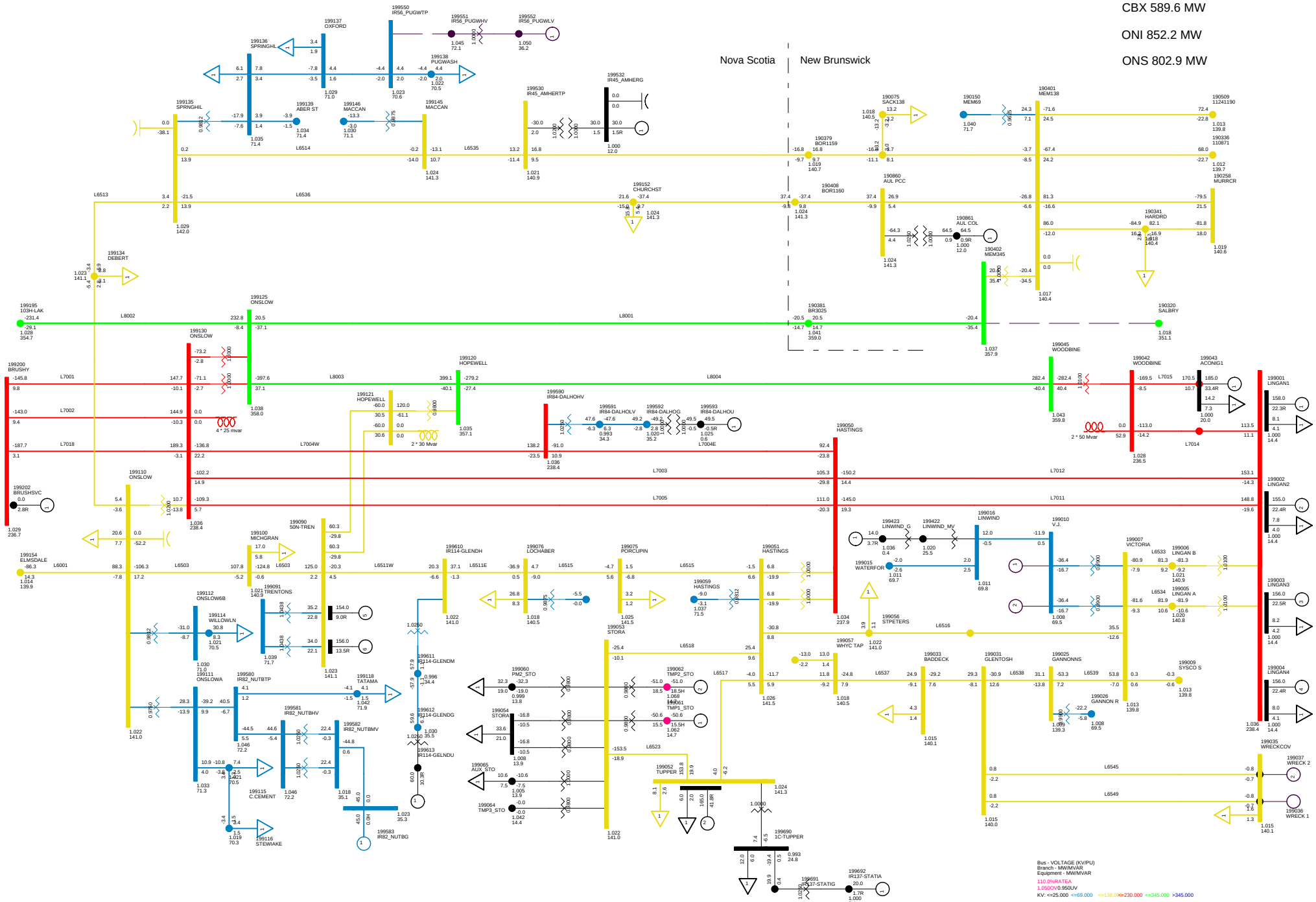

SUMMER PEAK NS-NB = 0
C63 FAULT ON SALISBURY SA3-2 TRIPS L3006 AND L3017
NORTHEASTERN NS SUN, FEB 08 2009 8:36

Total Wind Gen: 105.0 MW
Gross Lingan 625.0 MW
Gross Pt Aconi 185.0 MW

Gross Tupper 165.0 MW
Gross Trenton 310.0 MW
Gross Tuft's Cove 153.2 MW

Gross Wreck Cove 0.0 MW
Gross Gas Turbine 0.0 MW
Gross Small Hydro 42.9 MW

Net Stora Load 178.9 MW
Total BMPC Load 108.5 MW

Figure ___

NSX 0.0 MW

CBX 589.6 MW

ONI 852.1 MW

ONS 802.8 MW

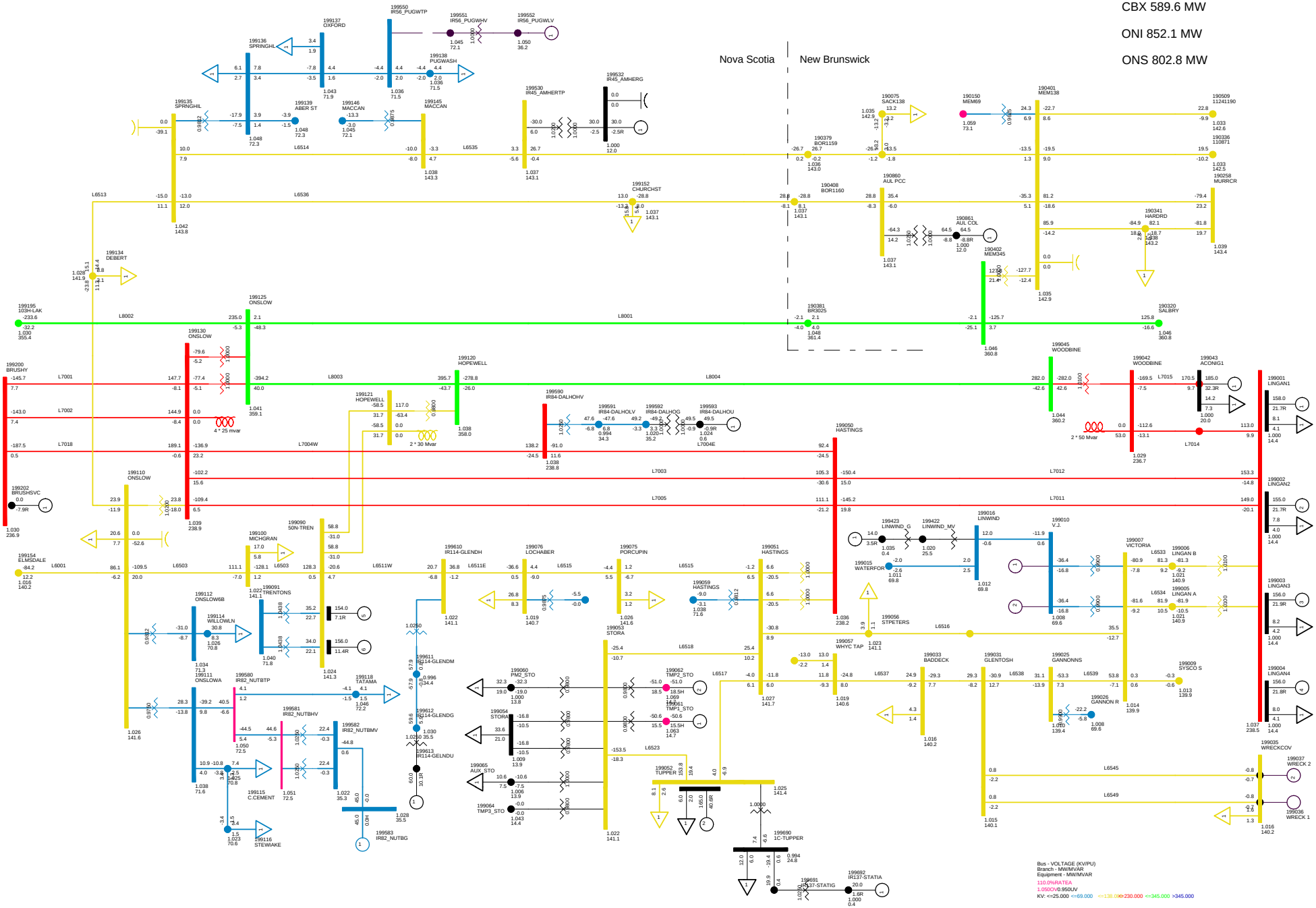

SUMMER PEAK NS-NB = 0
C64 FAULT ON BREAKER SALISBURY BREAKER SA3-4 TRIPS L3013 AND
NORTHEASTERN NS SUN, FEB 08 2009 8:36

Total Wind Gen: 105.0 MW
Gross Lingan 625.0 MW
Gross Pt Aconi 185.0 MW

Gross Tupper 165.0 MW
Gross Trenton 310.0 MW
Gross Tuft's Cove 153.2 MW

Gross Wreck Cove 0.0 MW
Gross Gas Turbine 0.0 MW
Gross Small Hydro 42.9 MW

Net Stora Load 178.9 MW
Total BMPC Load 108.5 MW

Figure ___

NSX 200.1 MW

CBX 780.0 MW

ONI 1036.7 MW

ONS 791.6 MW

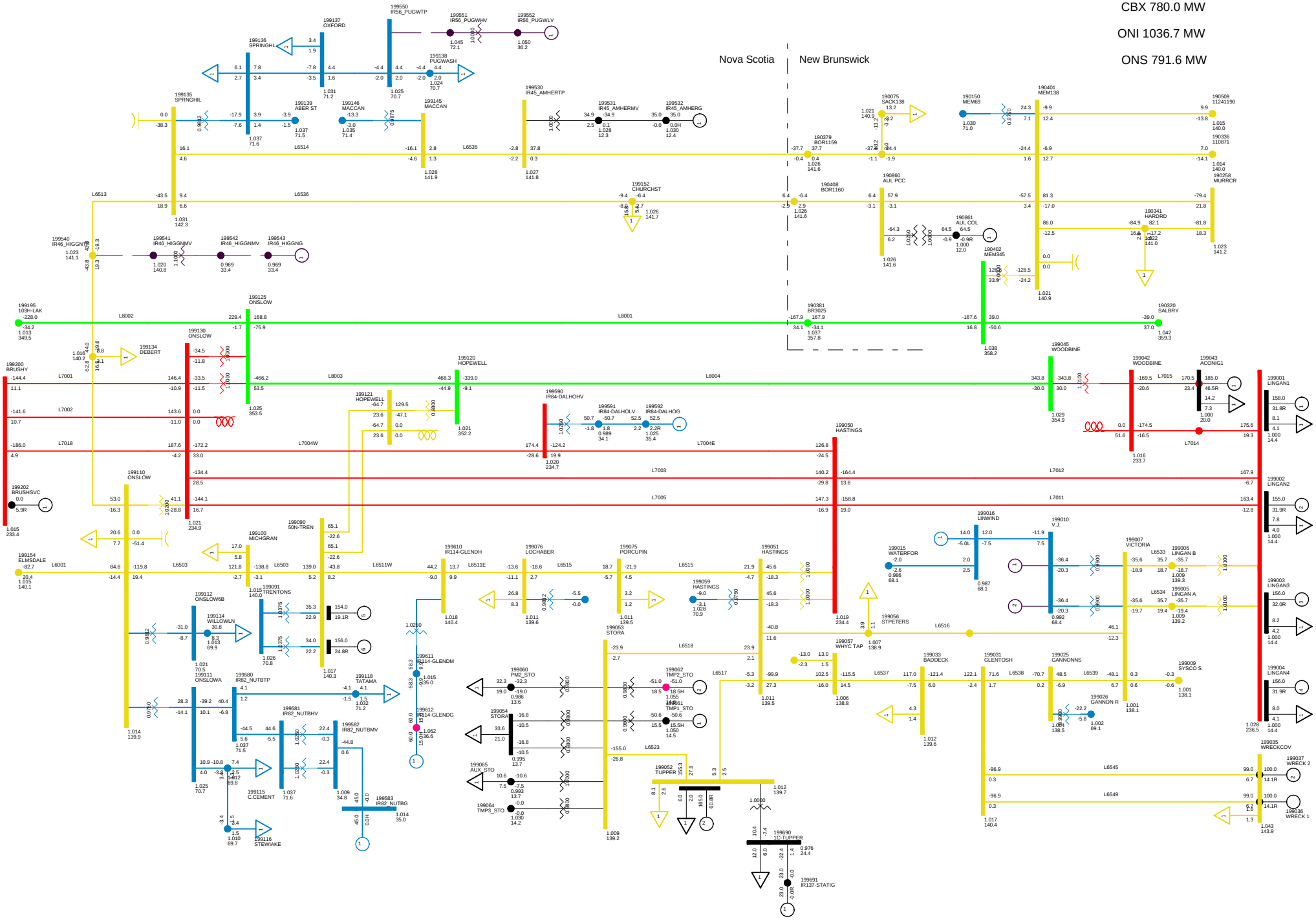

2010 SUMMER PEAK, NSLOAD=1700
NS-NB=+250; NB-NE=1000; CBX=780; ONI=1036 ONS=791
NORTHEASTERN NS TUE, DEC 09 2008 22:50

Total Wind Gen: 290.1 MW
Gross Lingan 625.0 MW
Gross Pt Aconi 185.0 MW
Gross Tupper 165.0 MW
Gross Trenton 310.0 MW
Gross Tuft's Cove 133.2 MW
Gross Wreck Cove 200.0 MW
Gross Gas Turbine 0.0 MW
Gross Small Hydro 42.9 MW
Net Stora Load 178.9 MW
Total BMPC Load 108.5 MW

Bus - VOLTAGE (KV/PU)
Branch - MW/MVAR
Equipment - MW/MVAR
110.0%RATEA
1.050OV 0.950UV
KV: <=25.000 <=69.000 <=138.000 <=230.000 <=345.000 >345.000

Figure ___

NSX 32.6 MW
CBX 620.9 MW
ONI 869.6 MW
ONS 792.5 MW

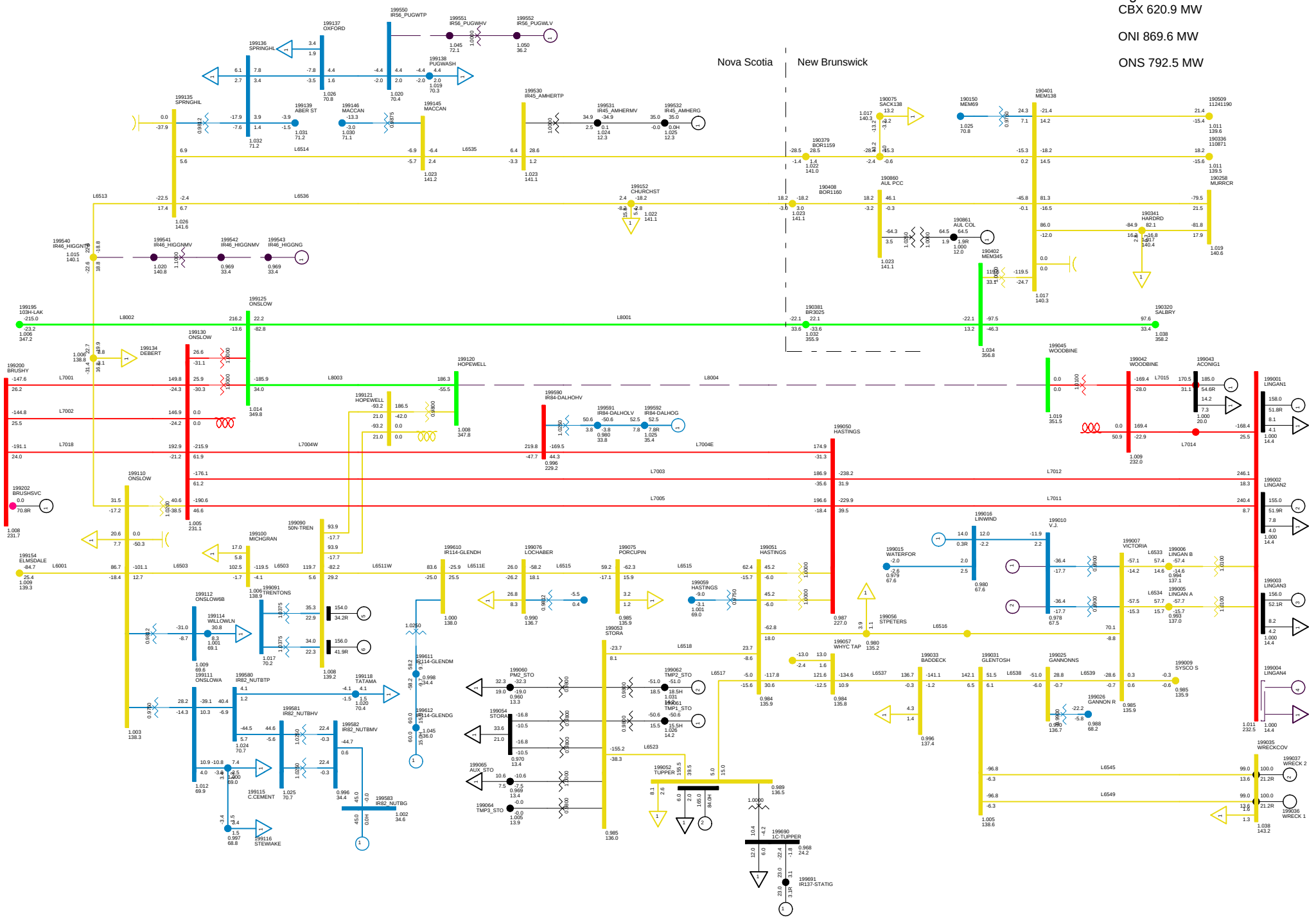

2013 SUMMER PEAK NS EXPORT 200
C01S LOSE L8004 WITH 1 UNIT SPS
NORTHEASTERN NS TUE, DEC 09 2008 22:50

Total Wind Gen: 290.1 MW | Gross Tupper 165.0 MW | Gross Wreck Cove 200.0 MW | Net Stora Load 179.0 MW
Gross Lingan 469.0 MW | Gross Trenton 310.0 MW | Gross Gas Turbine 0.0 MW | Total BMPC Load 108.6 MW
Gross Pt Aconi 185.0 MW | Gross Tuft's Cove 133.2 MW | Gross Small Hydro 42.9 MW

Bus - VOLTAGE (KV/PU)
Branch - MW/MVAR
Equipment - MW/MVAR
110.0%RATEA
1.050OV 0.950UV
KV: <=25.000 <=69.000 <=138.000 <=230.000 <=345.000 >345.000

Figure ___

NSX -87.4 MW

CBX 488.4 MW

ONI 748.8 MW

ONS 791.9 MW

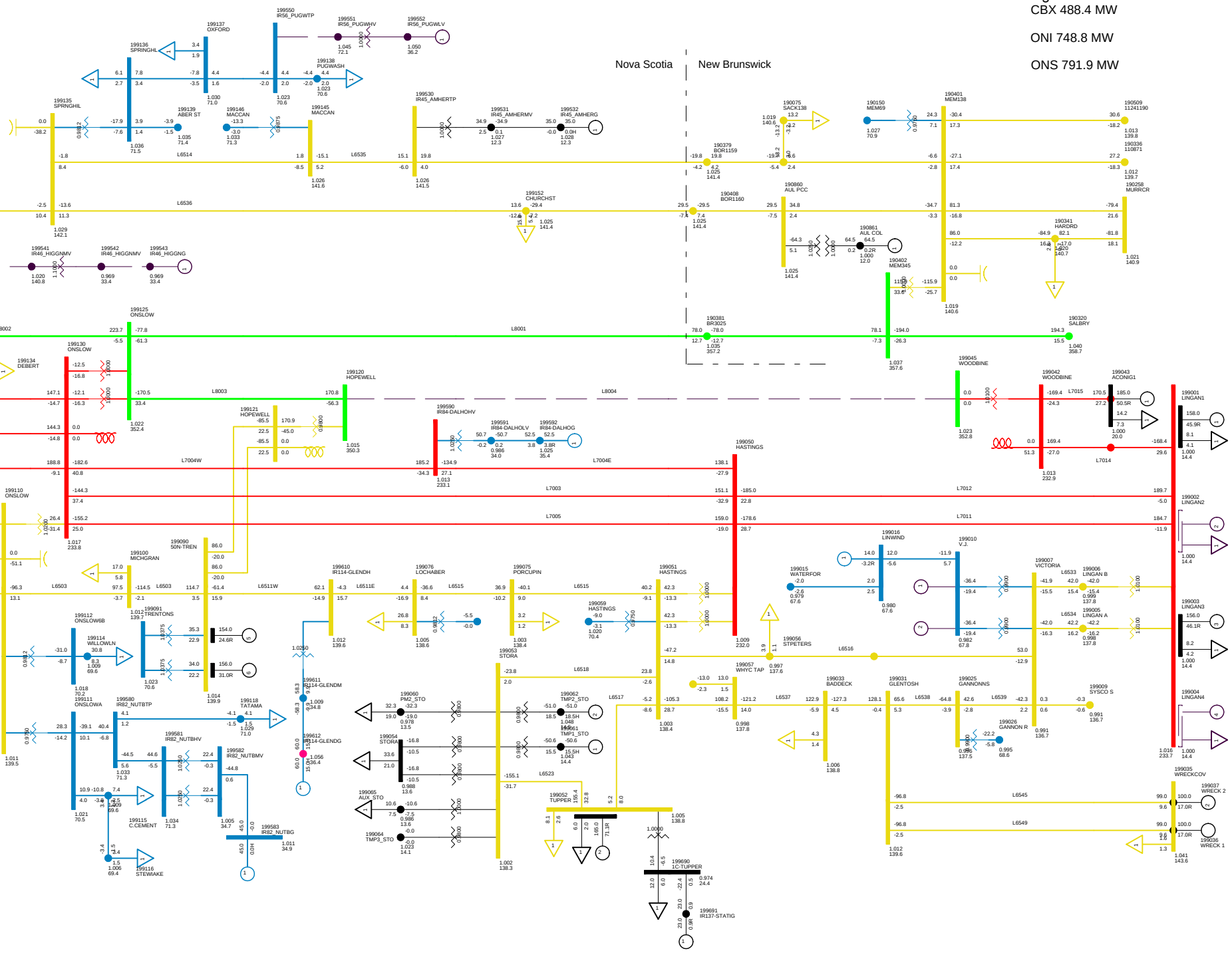

2013 SUMMER PEAK NS EXPORT 200
C01SS LOSE L8004 WITH 2 UNIT SPS
NORTHEASTERN NS TUE, DEC 09 2008 22:51

Total Wind Gen: 290.1 MW
Gross Lingan 314.0 MW
Gross Pt Aconi 185.0 MW
Gross Tupper 165.0 MW
Gross Trenton 310.0 MW
Gross Tuft's Cove 133.2 MW
Gross Wreck Cove 200.0 MW
Gross Gas Turbine 0.0 MW
Gross Small Hydro 42.9 MW
Net Stora Load 178.9 MW
Total BMPC Load 108.5 MW

Bus - VOLTAGE (KV/PU)
Branch - MW/MVAR
Equipment - MW/MVAR
110.0%RATEA
1.0500V 0.950UV
KV: <=25.000 <=69.000 <=138.000 <=230.000 <=345.000 >345.000

Figure ___

NSX 28.5 MW
CBX 629.3 MW
ONI 868.1 MW
ONS 794.2 MW

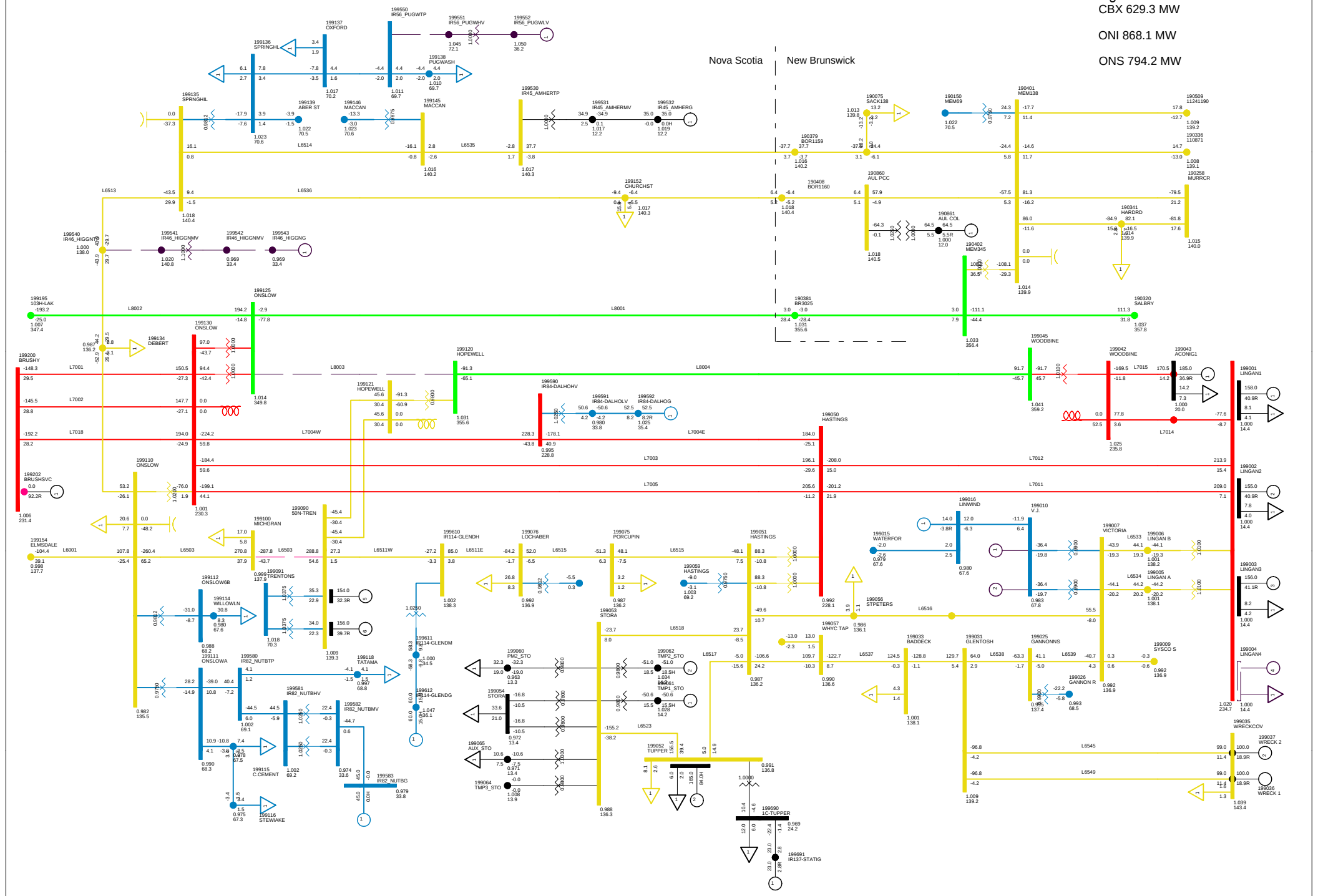

2013 SUMMER PEAK NS EXPORT 200
C02S LOSE L8003 WITH 1-UNIT SPS
NORTHEASTERN NS TUE, DEC 09 2008 22:51

Total Wind Gen: 290.1 MW
Gross Lingan 469.0 MW
Gross Pt Aconi 185.0 MW
Gross Tupper 165.0 MW
Gross Trenton 310.0 MW
Gross Tuft's Cove 133.2 MW
Gross Wreck Cove 200.0 MW
Gross Gas Turbine 0.0 MW
Gross Small Hydro 42.9 MW
Net Stora Load 178.9 MW
Total BMPC Load 108.6 MW

Bus - VOLTAGE (KV/PU)
Branch - MW/MVAR
Equipment - MW/MVAR
110.0%RATEA
1.0500V 0.9500V
KV: <=25.000 <=69.000 <=138.000 <=230.000 <=345.000 >345.000

Figure ___

NSX -93.4 MW

CBX 492.7 MW

ONI 744.3 MW

ONS 793.1 MW

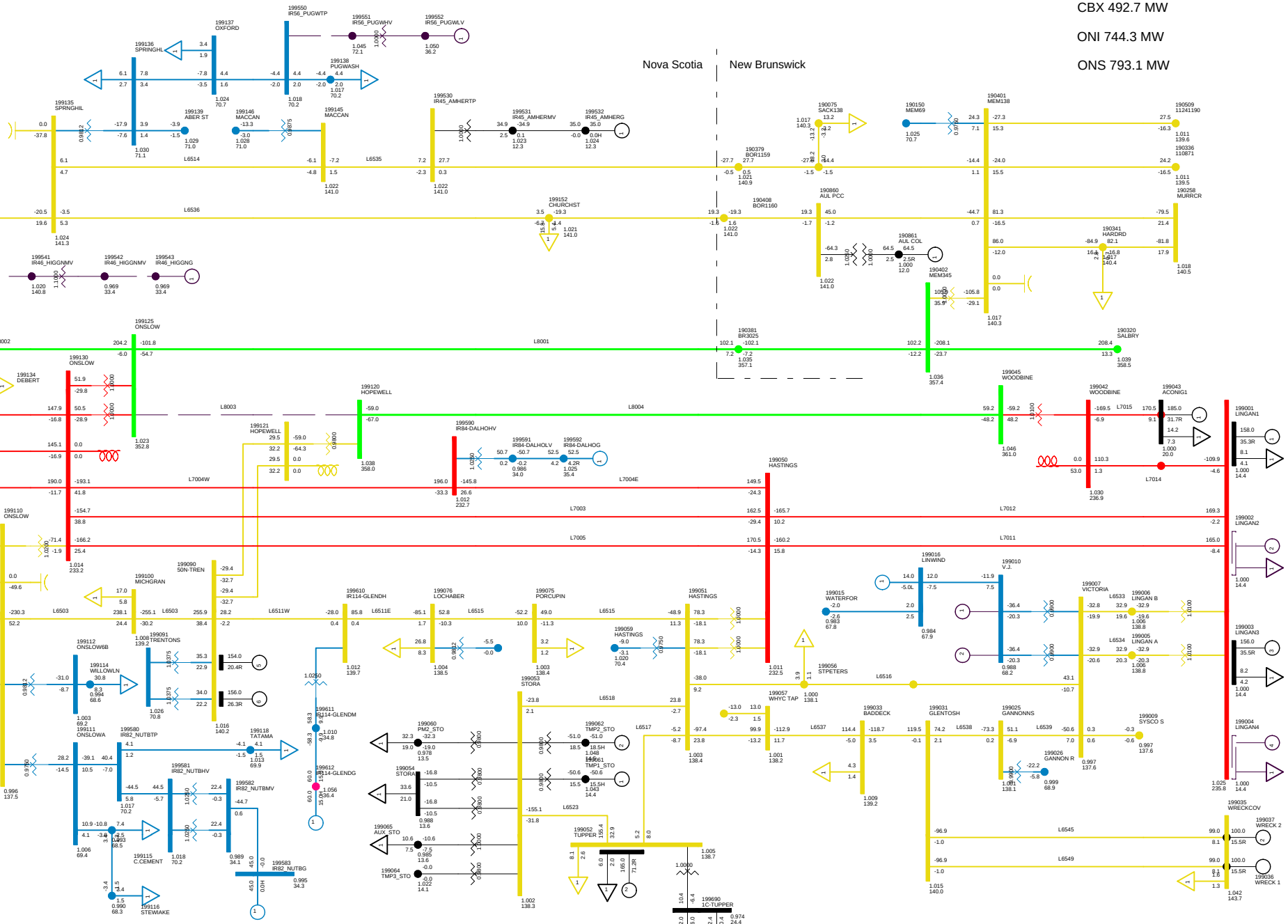

2013 SUMMER PEAK NS EXPORT 200
C02SS LOSE L8003 WITH 2-UNIT SPS
NORTHEASTERN NS TUE, DEC 09 2008 22:51

Total Wind Gen: 290.1 MW | Gross Tupper 165.0 MW | Gross Wreck Cove 200.0 MW | Net Stora Load 178.9 MW
Gross Lingan 314.0 MW | Gross Trenton 310.0 MW | Gross Gas Turbine 0.0 MW | Total BMPC Load 108.5 MW
Gross Pt Aconi 185.0 MW | Gross Tuft's Cove 133.2 MW | Gross Small Hydro 42.9 MW

Bus - VOLTAGE (KV/PU)
Branch - MW/MVAR
Equipment - MW/MVAR
110.0%RATEA
1.050OV 0.950UV
KV: <=25.000 <=69.000 <=138.000 <=230.000 <=345.000 >345.000

Figure ___

NSX 189.4 MW
CBX 779.4 MW
ONI 1035.5 MW
ONS 801.2 MW

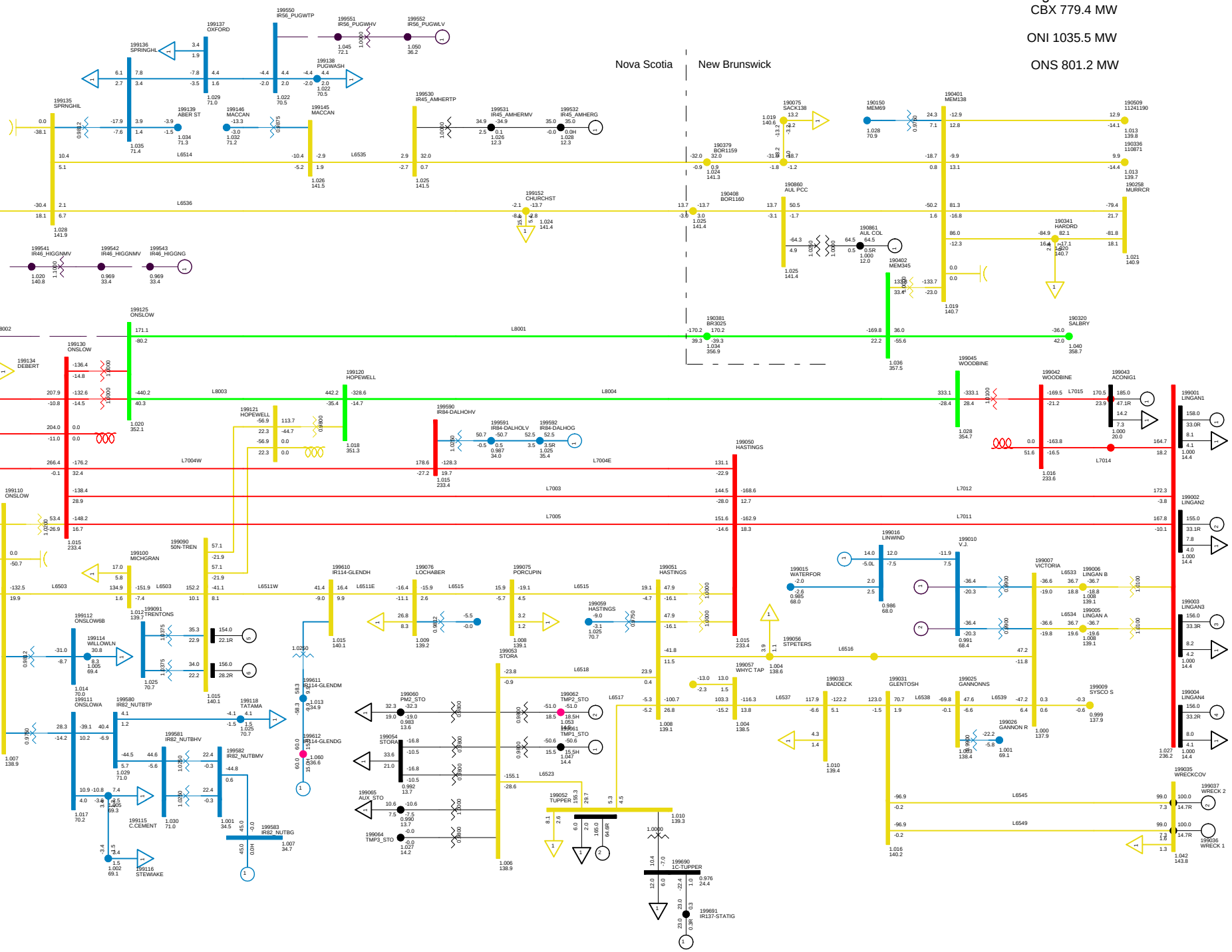

2013 SUMMER PEAK NS EXPORT 200
C03 LOSE L8002
NORTHEASTERN NS TUE, DEC 09 2008 22:51

Total Wind Gen: 290.1 MW | Gross Tupper 165.0 MW | Gross Wreck Cove 200.0 MW | Net Stora Load 178.9 MW
Gross Lingan 625.0 MW | Gross Trenton 310.0 MW | Gross Gas Turbine 0.0 MW | Total BMPC Load 108.5 MW
Gross Pt Aconi 185.0 MW | Gross Tuft's Cove 133.2 MW | Gross Small Hydro 42.9 MW

Bus - VOLTAGE (KV/PU)
Branch - MW/MVAR
Equipment - MW/MVAR
110.0%RATEA
1.0500V 0.950UV
KV: <=25.000 <=69.000 <=138.000 <=230.000 <=345.000 >345.000

Figure ___

NSX 65.4 MW
CBX 640.1 MW
ONI 903.4 MW
ONS 791.3 MW

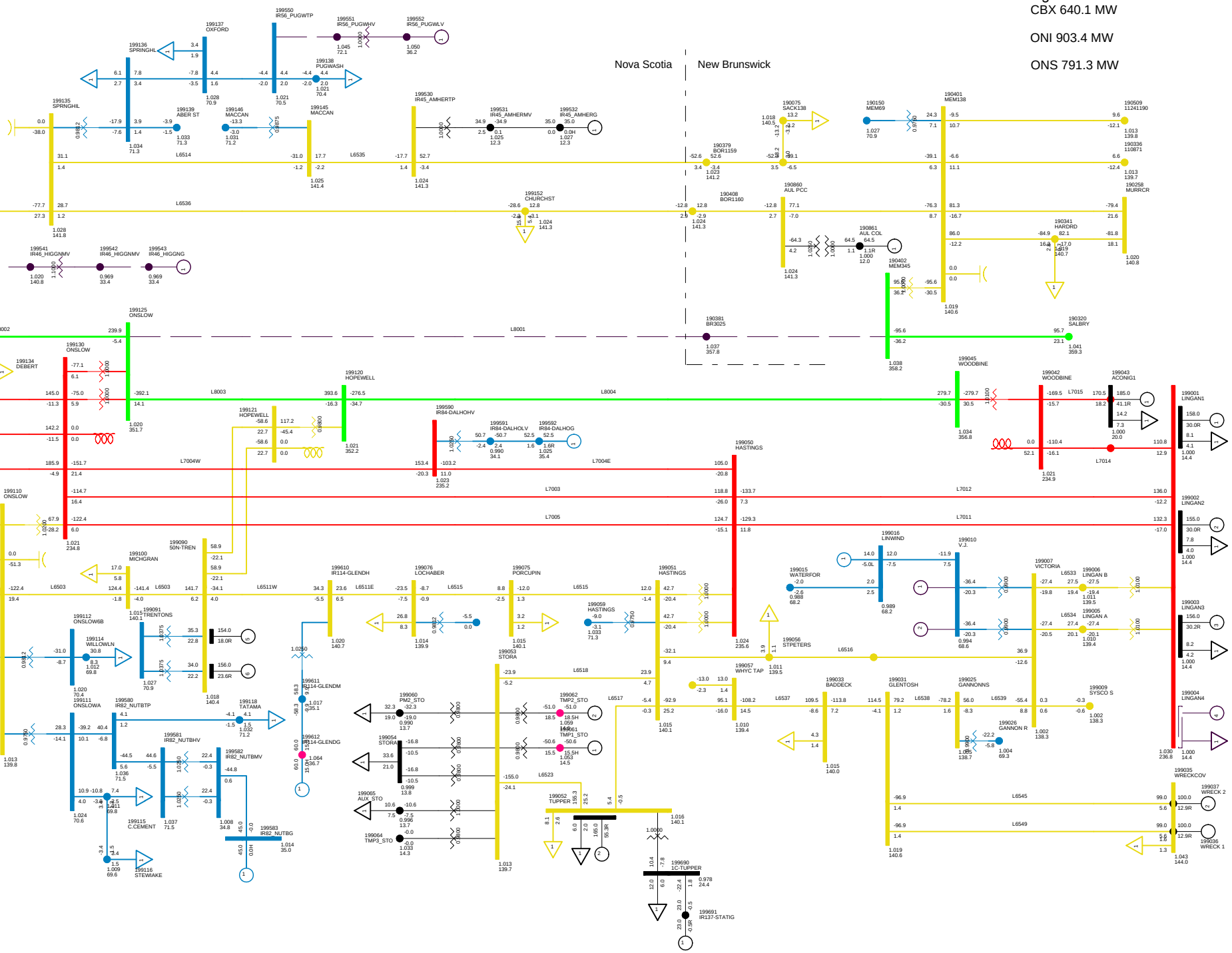

2013 SUMMER PEAK NS EXPORT 200
C04S LOSE L8001 SPS TRIPS 1 LINGAN UNIT
NORTHEASTERN NS TUE, DEC 09 2008 22:51

Total Wind Gen: 290.1 MW | Gross Tupper 165.0 MW | Gross Wreck Cove 200.0 MW | Net Stora Load 178.9 MW
Gross Lingan 469.0 MW | Gross Trenton 310.0 MW | Gross Gas Turbine 0.0 MW | Total BMPC Load 108.5 MW
Gross Pt Aconi 185.0 MW | Gross Tuft's Cove 133.2 MW | Gross Small Hydro 42.9 MW

Bus - VOLTAGE (KV/PU)
Branch - MW/MVAR
Equipment - MW/MVAR
110.0%RATEA
1.050OV 0.950UV
KV: <=25.000 <=69.000 <=138.000 <=230.000 <=345.000 >345.000

Figure ___

NSX 200.1 MW

CBX 780.0 MW

ONI 1036.7 MW

ONS 791.6 MW

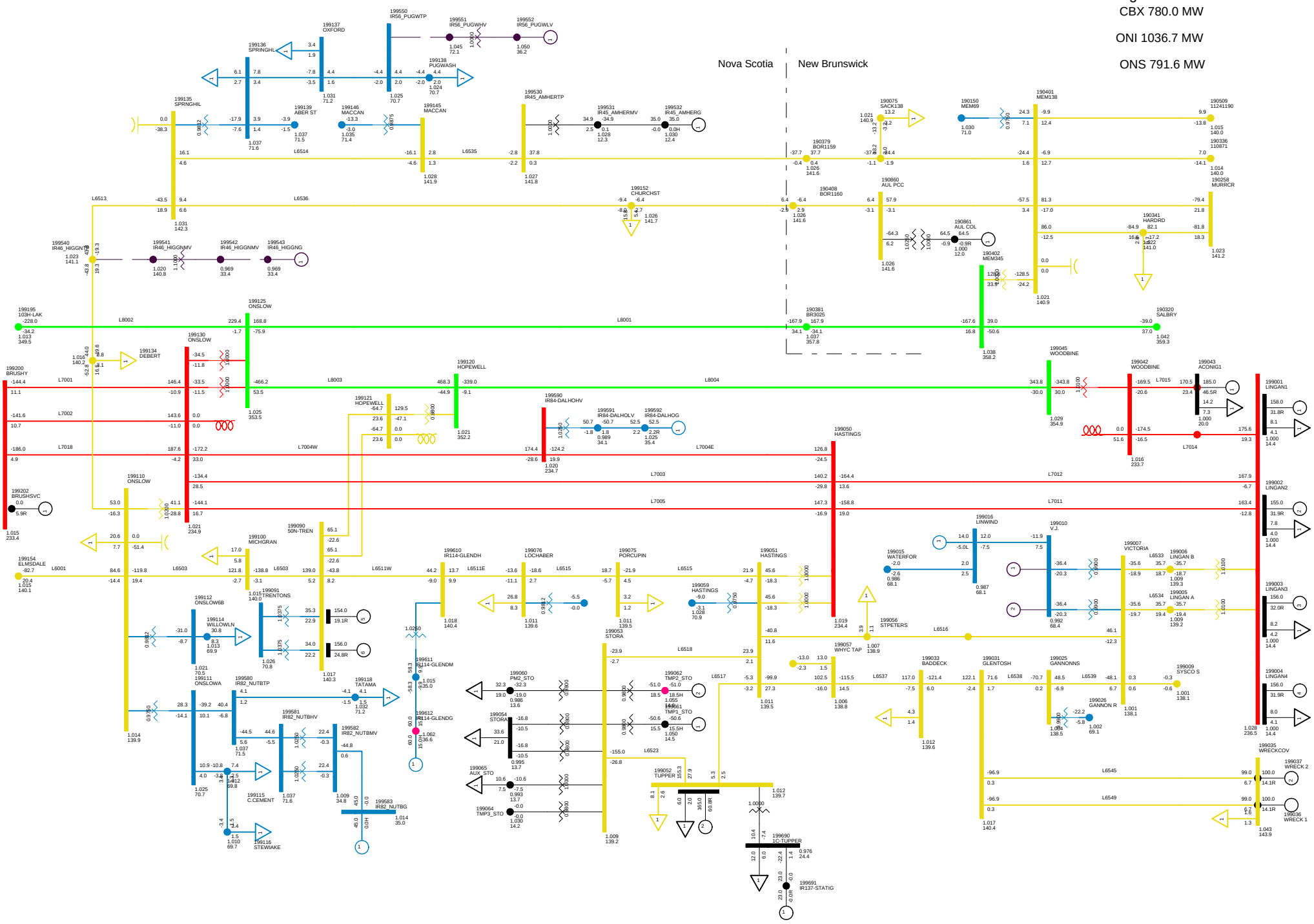

2010 SUMMER PEAK, NSLOAD=1700
NS-NB=+250; NB-NE=1000; CBX=780; ONI=1036 ONS=791
NORTHEASTERN NS TUE, DEC 09 2008 22:52

Total Wind Gen: 290.1 MW
Gross Lingan 625.0 MW
Gross Pt Aconi 185.0 MW
Gross Tupper 165.0 MW
Gross Trenton 310.0 MW
Gross Tuft's Cove 133.2 MW
Gross Wreck Cove 200.0 MW
Gross Gas Turbine 0.0 MW
Gross Small Hydro 42.9 MW
Net Stora Load 178.9 MW
Total BMPC Load 108.5 MW

Bus - VOLTAGE (KV/PU)
Branch - MW/MVAR
Equipment - MW/MVAR
110.0%RATEA
1.050OV 0.950UV
KV: <=25.000 <=69.000 <=138.000 <=230.000 <=345.000 >345.000

Figure ___

NSX 194.6 MW

CBX 773.8 MW

ONI 1031.2 MW

ONS 791.6 MW

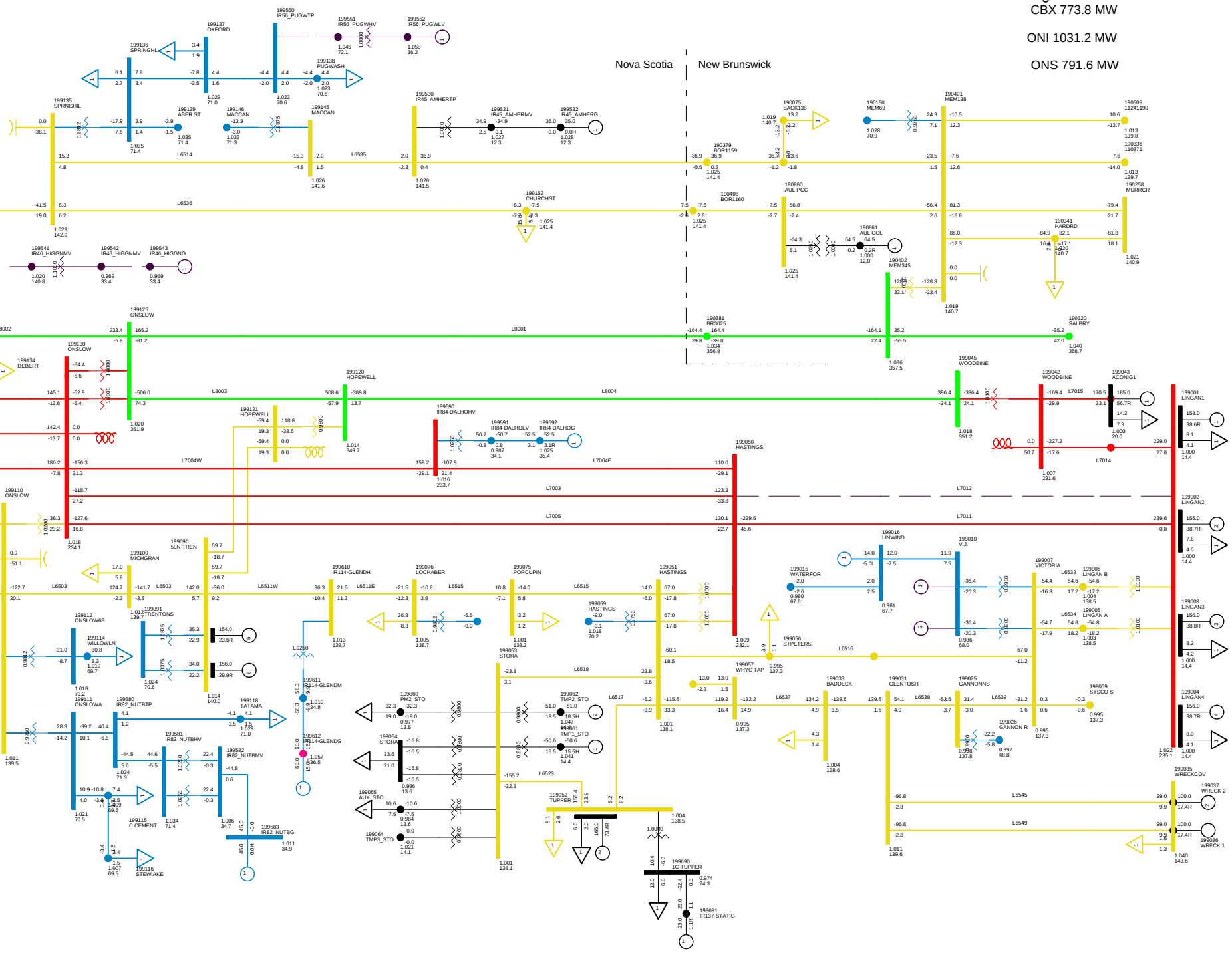

2013 SUMMER PEAK NS EXPORT 200
C05 LOSE L7012 NO SPS
NORTHEASTERN NS TUE, DEC 09 2008 22:52

Total Wind Gen: 290.1 MW | Gross Tupper 165.0 MW | Gross Wreck Cove 200.0 MW | Net Stora Load 178.9 MW
Gross Lingan 625.0 MW | Gross Trenton 310.0 MW | Gross Gas Turbine 0.0 MW | Total BMPC Load 108.5 MW
Gross Pt Aconi 185.0 MW | Gross Tuft's Cove 133.2 MW | Gross Small Hydro 42.9 MW

Bus - VOLTAGE (KV/PU)
Branch - MW/MVAR
Equipment - MW/MVAR
110.0%RATEA
1.050OV 0.950UV
KV: <=25.000 <=69.000 <=138.000 <=230.000 <=345.000 >345.000

Figure ___

NSX 197.3 MW
CBX 776.5 MW
ONI 1033.9 MW
ONS 791.6 MW

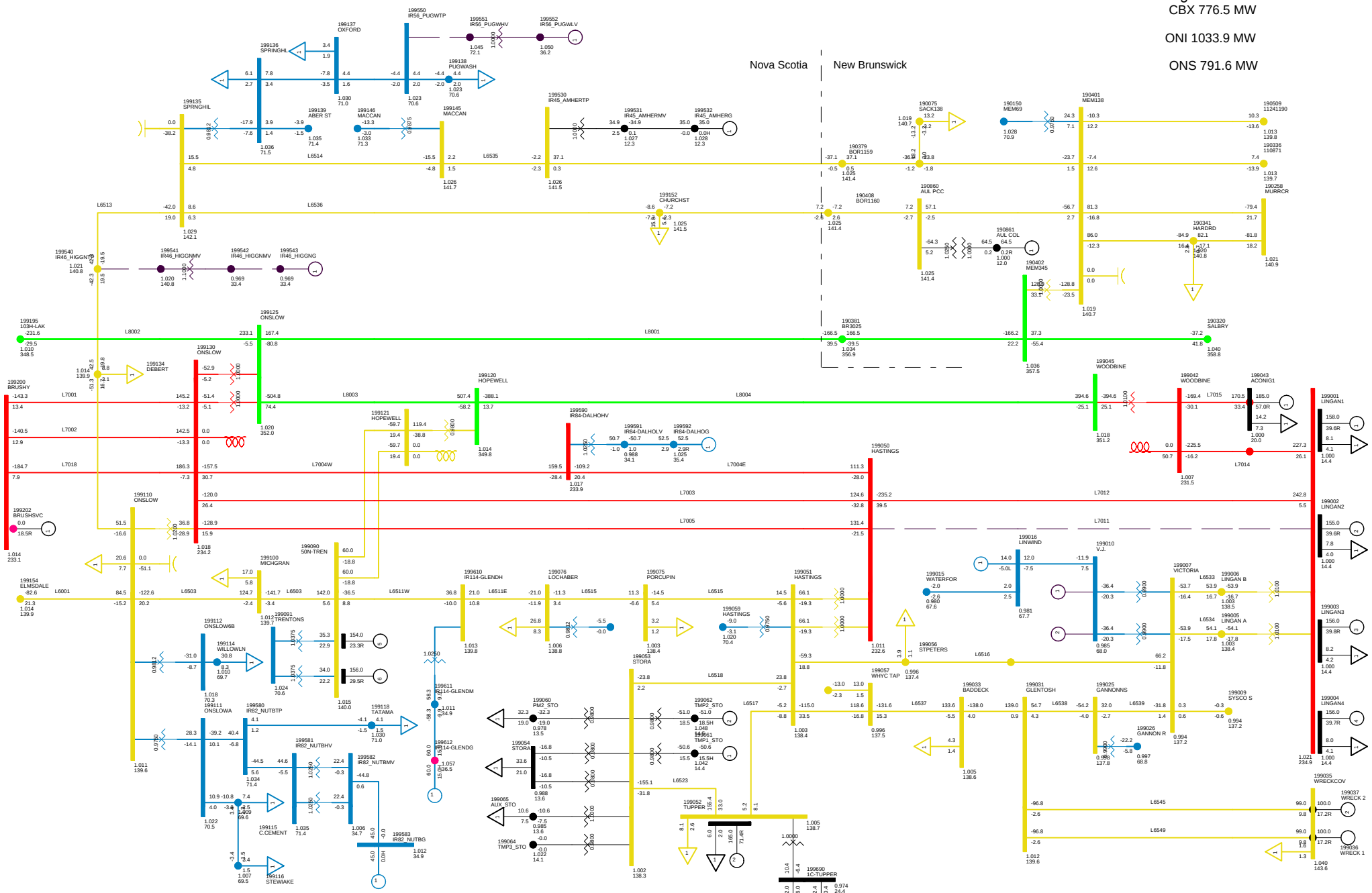

2013 SUMMER PEAK NS EXPORT 200
C06 LOSE L7011
NORTHEASTERN NS TUE, DEC 09 2008 22:52

Total Wind Gen: 290.1 MW | Gross Tupper 165.0 MW | Gross Wreck Cove 200.0 MW | Net Stora Load 178.9 MW
Gross Lingan 625.0 MW | Gross Trenton 310.0 MW | Gross Gas Turbine 0.0 MW | Total BMPC Load 108.5 MW
Gross Pt Aconi 185.0 MW | Gross Tuft's Cove 133.2 MW | Gross Small Hydro 42.9 MW

Bus - VOLTAGE (KV/PU)
Branch - MW/MVAR
Equipment - MW/MVAR
110.0%RATEA
1.0500V 0.9500V
KV: <=25.000 <=69.000 <=138.000 <=230.000 <=345.000 >345.000

Figure ___

NSX 192.9 MW
CBX 780.9 MW
ONI 1029.7 MW
ONS 791.8 MW

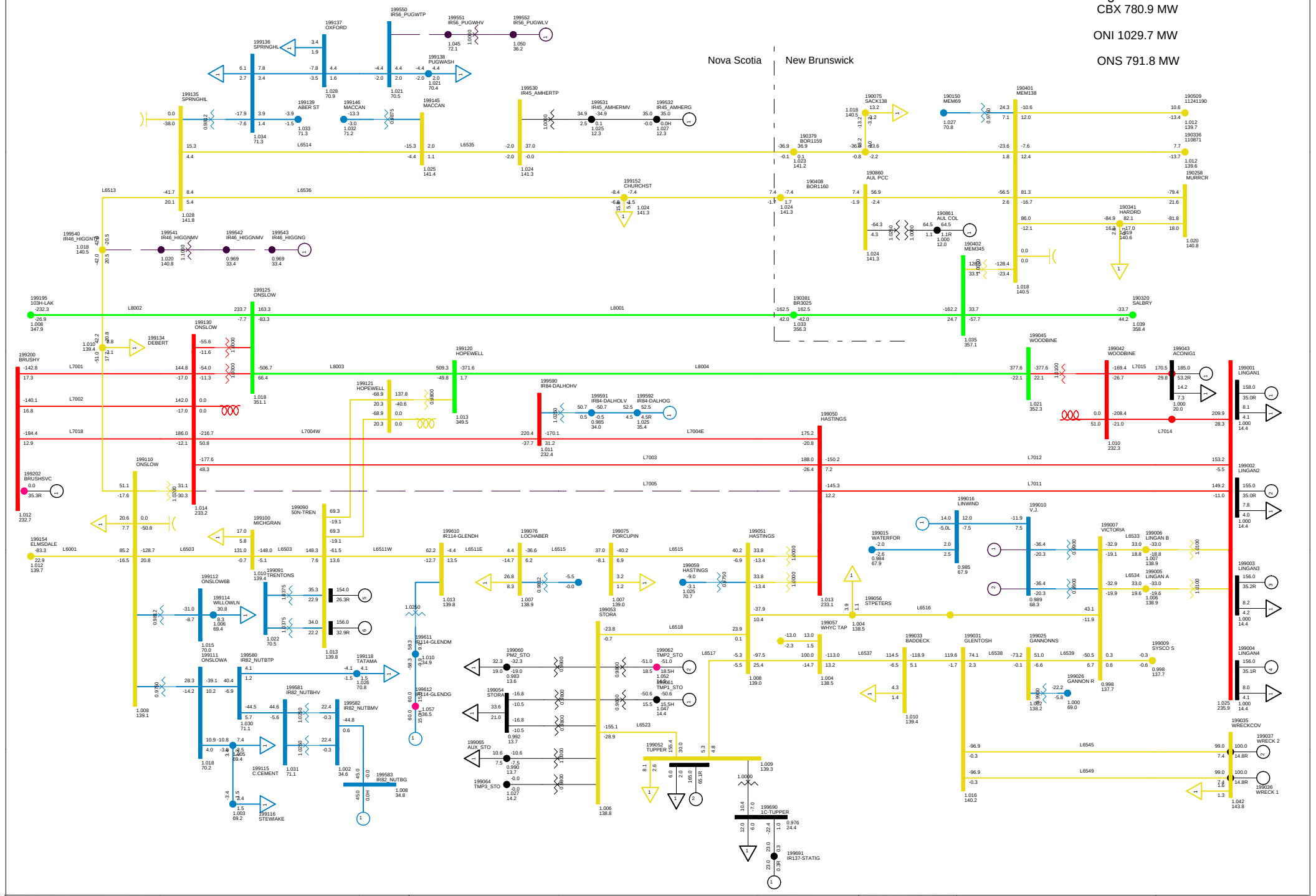

2013 SUMMER PEAK NS EXPORT 200
C07 LOSE L7005
NORTHEASTERN NS TUE, DEC 09 2008 22:52

Total Wind Gen: 290.1 MW | Gross Tupper 165.0 MW | Gross Wreck Cove 200.0 MW | Net Stora Load 178.9 MW
Gross Lingan 625.0 MW | Gross Trenton 310.0 MW | Gross Gas Turbine 0.0 MW | Total BMPC Load 108.5 MW
Gross Pt Aconi 185.0 MW | Gross Tuft's Cove 133.2 MW | Gross Small Hydro 42.9 MW

Bus - VOLTAGE (KV/PU)
Branch - MW/MVAR
Equipment - MW/MVAR
110.0%RATEA
1.050OV 0.950UV
KV: <=25.000 <=69.000 <=138.000 <=230.000 <=345.000 >345.000

Figure ___

NSX 195.6 MW

CBX 780.0 MW

ONI 1036.7 MW

ONS 796.2 MW

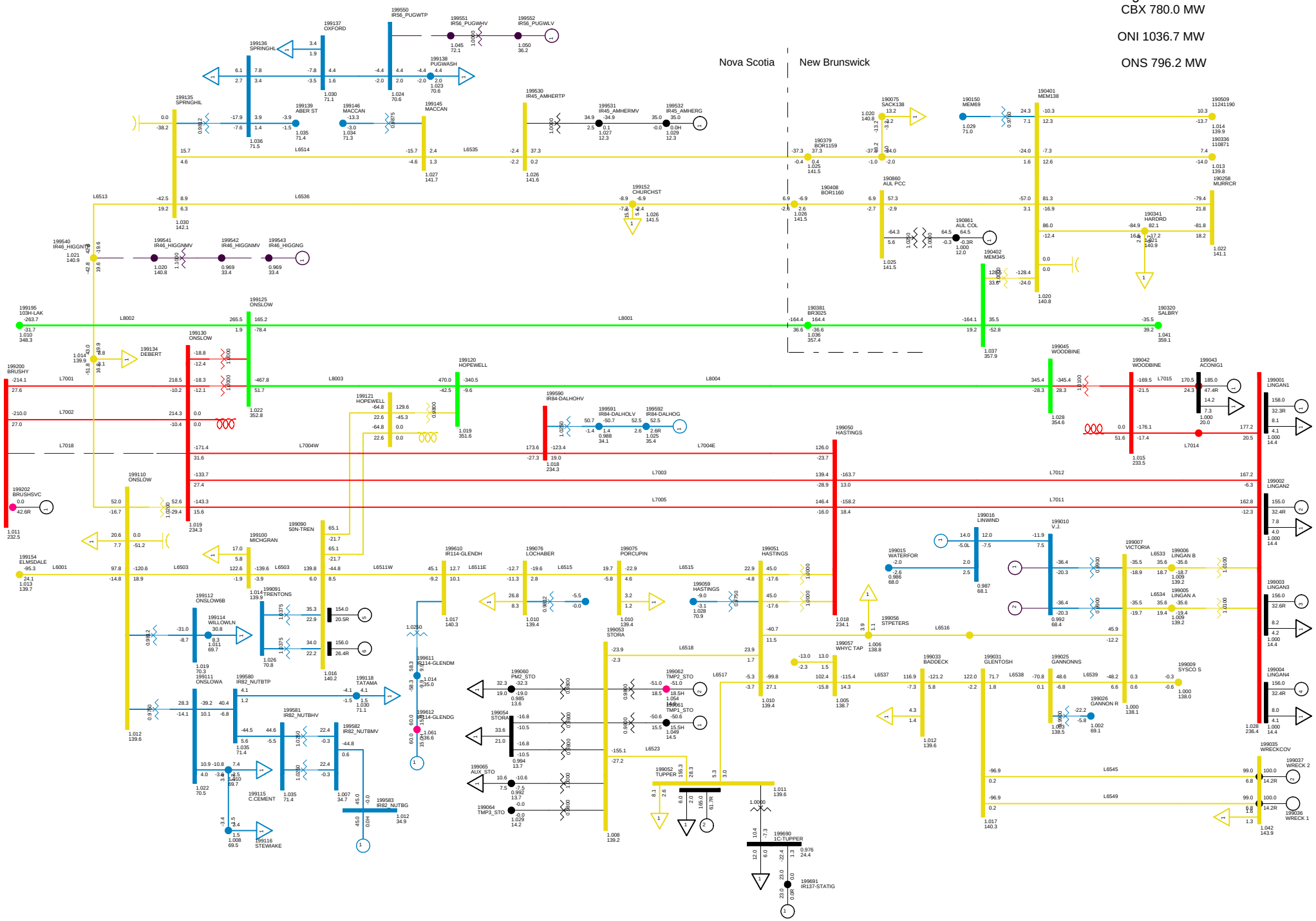

2013 SUMMER PEAK NS EXPORT 200
C08 LOSE L7018
NORTHEASTERN NS TUE, DEC 09 2008 22:52

Total Wind Gen: 290.1 MW | Gross Tupper 165.0 MW | Gross Wreck Cove 200.0 MW | Net Stora Load 178.9 MW
Gross Lingan 625.0 MW | Gross Trenton 310.0 MW | Gross Gas Turbine 0.0 MW | Total BMPC Load 108.6 MW
Gross Pt Aconi 185.0 MW | Gross Tuft's Cove 133.2 MW | Gross Small Hydro 42.9 MW

Bus - VOLTAGE (KV/PU)
Branch - MW/MVAR
Equipment - MW/MVAR
110.0%RATEA
1.0500V 0.950UV
KV: <=25.000 <=69.000 <=138.000 <=230.000 <=345.000 >345.000

Figure ___

Total Wind Gen: 290.1 MW
Gross Tupper 165.0 MW
Gross Wreck Cove 200.0 MW
Gross Lingan 625.0 MW
Gross Trenton 310.0 MW
Gross Gas Turbine 0.0 MW
Gross Pt Aconi 185.0 MW
Gross Tuft's Cove 133.2 MW
Gross Small Hydro 42.9 MW
Net Stora Load 178.9 MW
Total BMPC Load 108.6 MW

NSX 198.6 MW
CBX 779.9 MW
ONI 1036.6 MW
ONS 793.0 MW

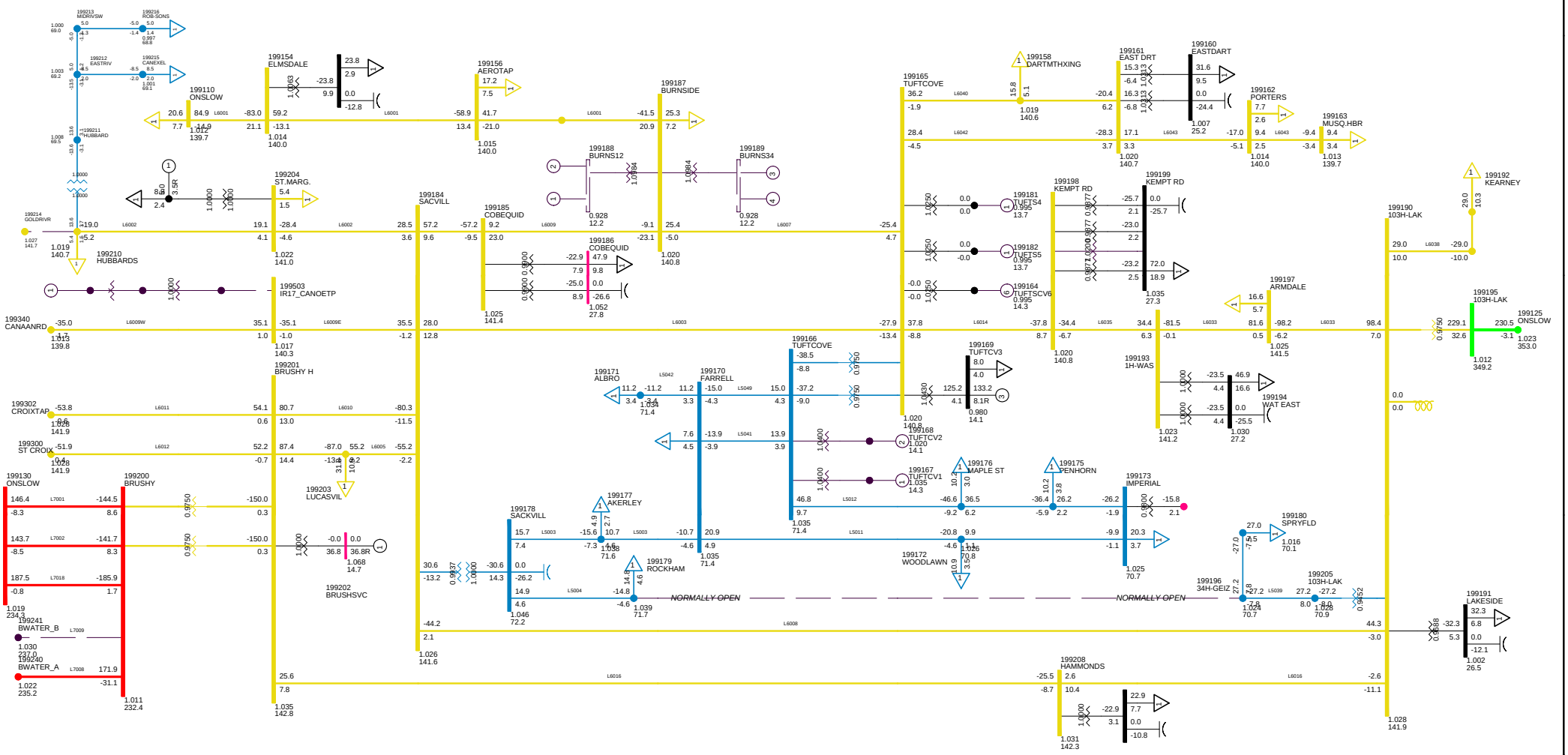

2013 SUMMER PEAK NS EXPORT 200
C09 LOSE L7009
METRO ZONE TUE, DEC 09 2008 22:53

Bus - VOLTAGE (KV/PU)
Branch - MW/MVAR
Equipment - MW/MVAR
100.0%RATEA
1.050OV 0.950UV
KV: <=30.000 <=69.000 <=138.000 <=230.000 <=345.000 >345.000

Figure __

NSX 193.7 MW

CBX 781.1 MW

ONI 1030.4 MW

ONS 791.8 MW

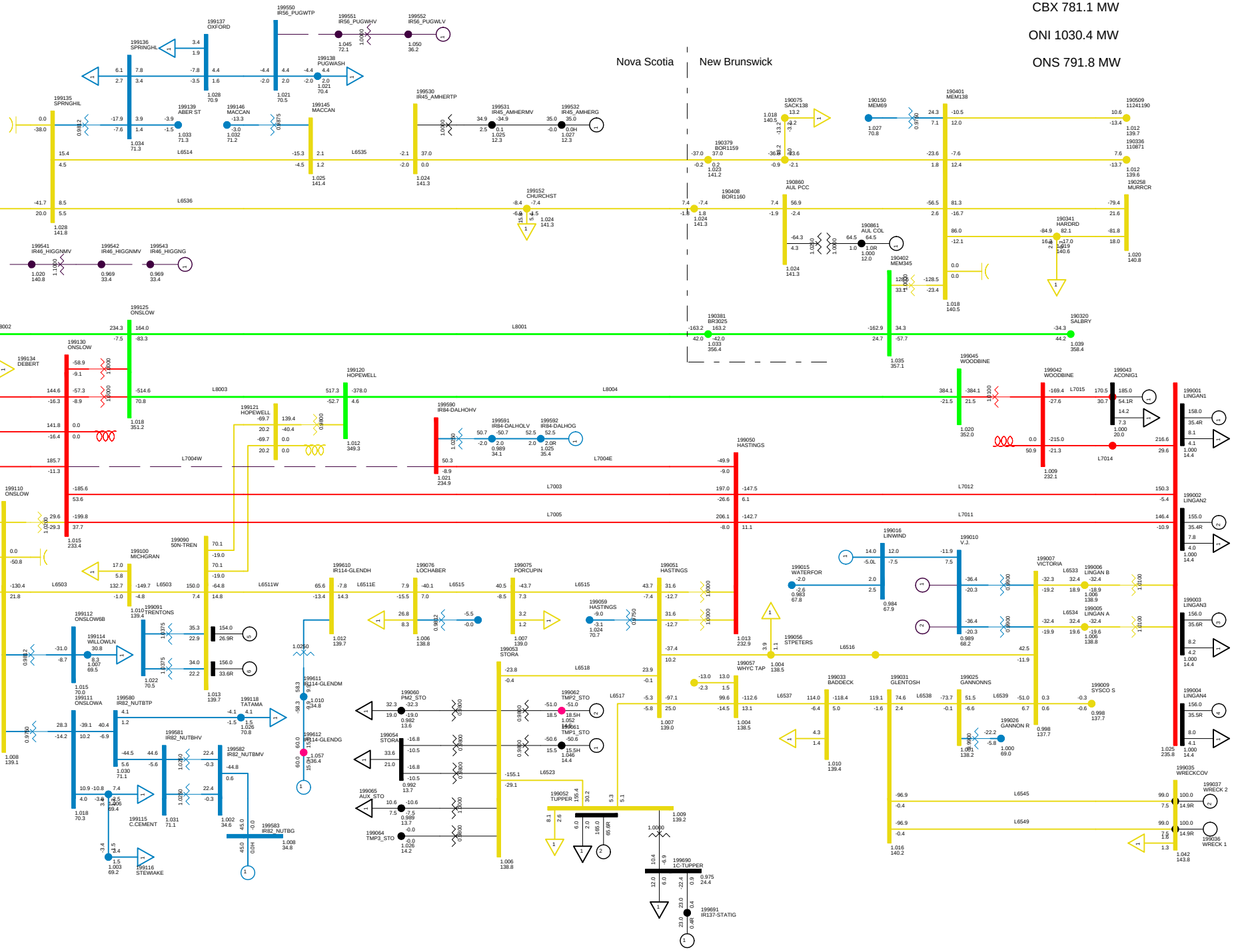

2013 SUMMER PEAK NS EXPORT 200
C10 LOSE L7004 WEST
NORTHEASTERN NS TUE, DEC 09 2008 22:53

Total Wind Gen: 290.1 MW | Gross Tupper 165.0 MW | Gross Wreck Cove 200.0 MW | Net Stora Load 178.9 MW
Gross Lingan 625.0 MW | Gross Trenton 310.0 MW | Gross Gas Turbine 0.0 MW | Total BMPC Load 108.5 MW
Gross Pt Aconi 185.0 MW | Gross Tuft's Cove 133.2 MW | Gross Small Hydro 42.9 MW

Bus - VOLTAGE (KV/PU)
Branch - MW/MVAR
Equipment - MW/MVAR
110.0%RATEA
1.050OV 0.950UV
KV: <=25.000 <=69.000 <=138.000 <=230.000 <=345.000 >345.000

Figure ___

NSX 181.5 MW
CBX 769.3 MW
ONI 1018.5 MW
ONS 792.0 MW

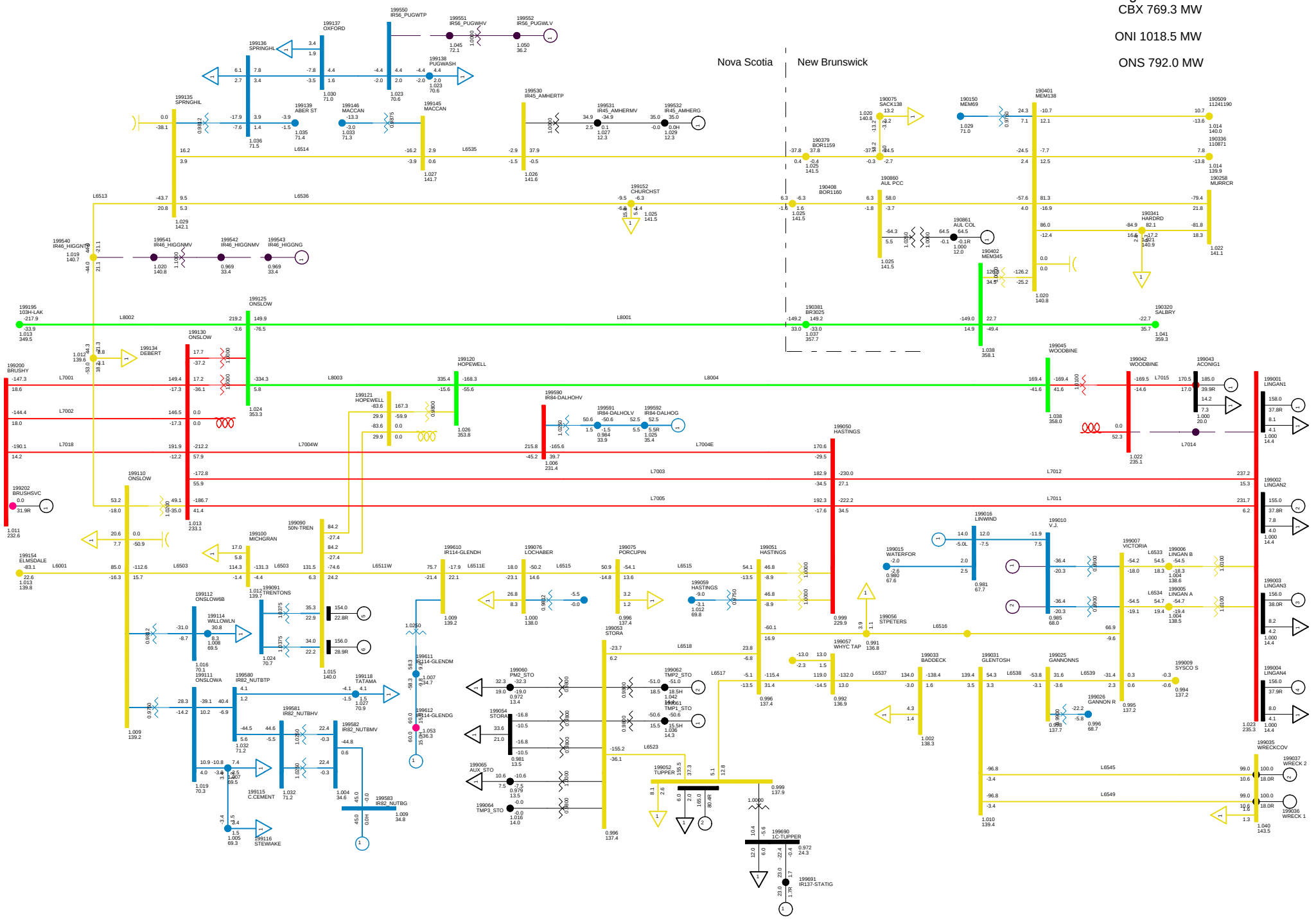

2013 SUMMER PEAK NS EXPORT 200
C11 LOSE L7014
NORTHEASTERN NS TUE, DEC 09 2008 22:53

Total Wind Gen: 290.1 MW | Gross Tupper 165.0 MW | Gross Wreck Cove 200.0 MW | Net Stora Load 178.9 MW
Gross Lingan 625.0 MW | Gross Trenton 310.0 MW | Gross Gas Turbine 0.0 MW | Total BMPC Load 108.6 MW
Gross Pt Aconi 185.0 MW | Gross Tuft's Cove 133.2 MW | Gross Small Hydro 42.9 MW

Bus - VOLTAGE (KV/PU)
Branch - MW/MVAR
Equipment - MW/MVAR
110.0%RATEA
1.050OV 0.950UV
KV: <=25.000 <=69.000 <=138.000 <=230.000 <=345.000 >345.000

Figure ___

NSX 200.1 MW

CBX 780.0 MW

ONI 1036.7 MW

ONS 791.6 MW

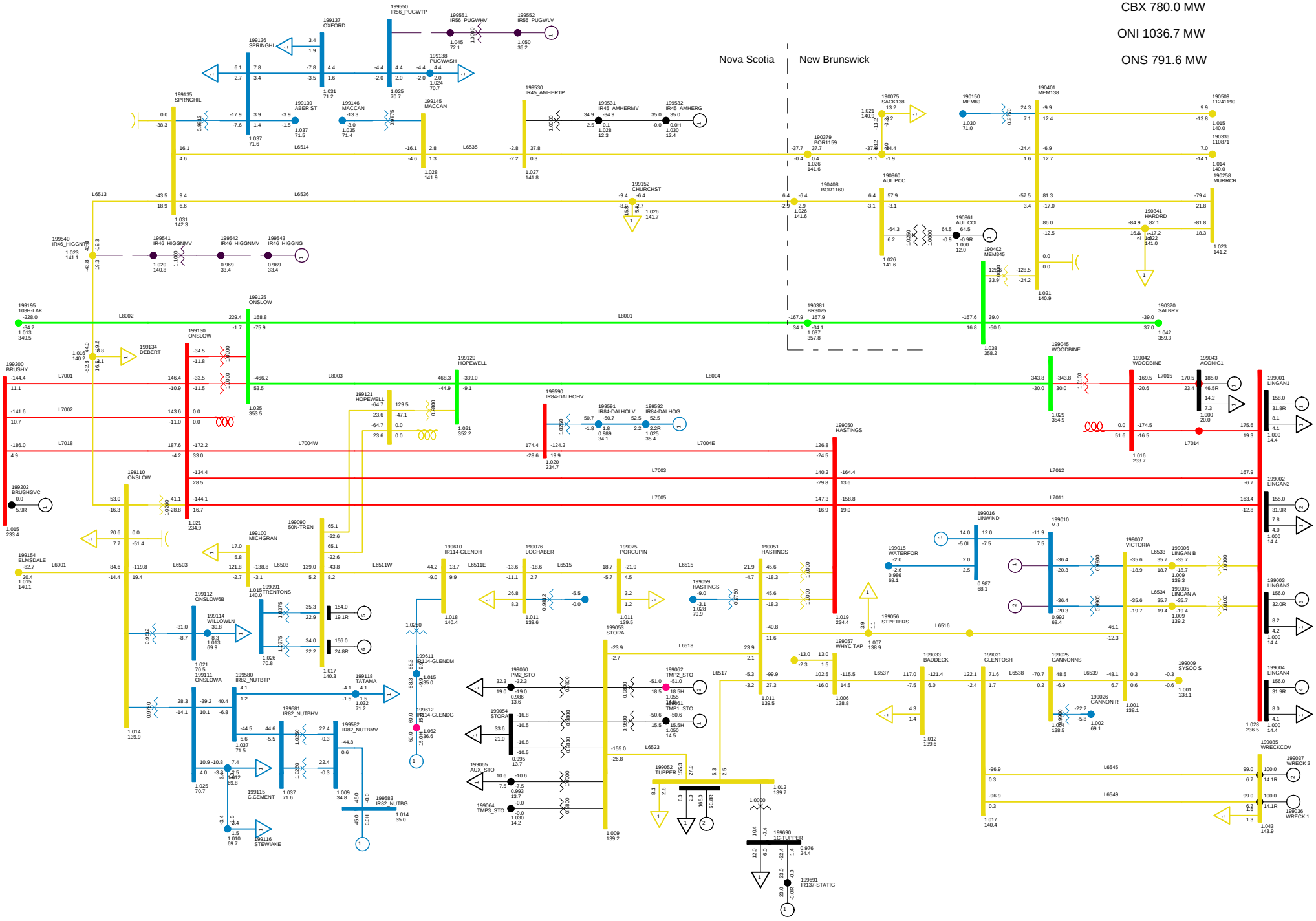

2010 SUMMER PEAK, NSLOAD=1700
NS-NB=+250; NB-NE=1000; CBX=780; ONI=1036 ONS=791
NORTHEASTERN NS TUE, DEC 09 2008 22:53

Total Wind Gen: 290.1 MW
Gross Lingan 625.0 MW
Gross Pt Aconi 185.0 MW
Gross Tupper 165.0 MW
Gross Trenton 310.0 MW
Gross Tuft's Cove 133.2 MW
Gross Wreck Cove 200.0 MW
Gross Gas Turbine 0.0 MW
Gross Small Hydro 42.9 MW
Net Stora Load 178.9 MW
Total BMPC Load 108.5 MW

Bus - VOLTAGE (KV/PU)
Branch - MW/MVAR
Equipment - MW/MVAR
110.0%RATEA
1.050OV 0.950UV
KV: <=25.000 <=69.000 <=138.000 <=230.000 <=345.000 >345.000

Figure ___

NSX 214.6 MW
CBX 779.5 MW
ONI 1050.7 MW
ONS 791.3 MW

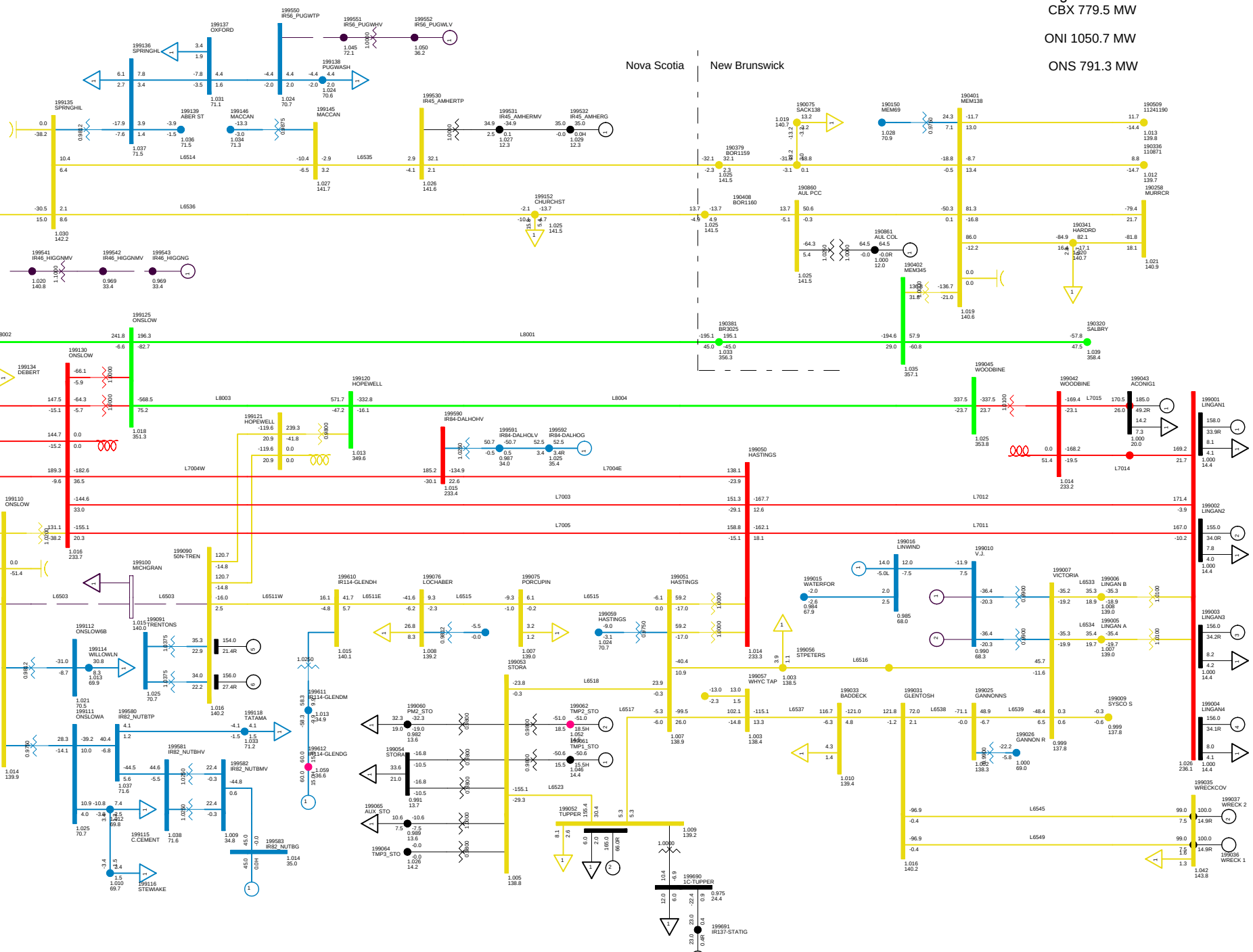

2013 SUMMER PEAK NS EXPORT 200
C12 LOSE 6503
NORTHEASTERN NS TUE, DEC 09 2008 22:53

Total Wind Gen: 290.1 MW | Gross Tupper 165.0 MW | Gross Wreck Cove 200.0 MW | Net Stora Load 178.9 MW
Gross Lingan 625.0 MW | Gross Trenton 310.0 MW | Gross Gas Turbine 0.0 MW | Total BMPC Load 108.5 MW
Gross Pt Aconi 185.0 MW | Gross Tuft's Cove 133.2 MW | Gross Small Hydro 42.9 MW

Bus - VOLTAGE (KV/PU)
Branch - MW/MVAR
Equipment - MW/MVAR
110.0%RATEA
1.050OV 0.950UV
KV: <=25.000 <=69.000 <=138.000 <=230.000 <=345.000 >345.000

Figure ___

NSX 203.0 MW
CBX 780.2 MW
ONI 1039.5 MW
ONS 791.6 MW

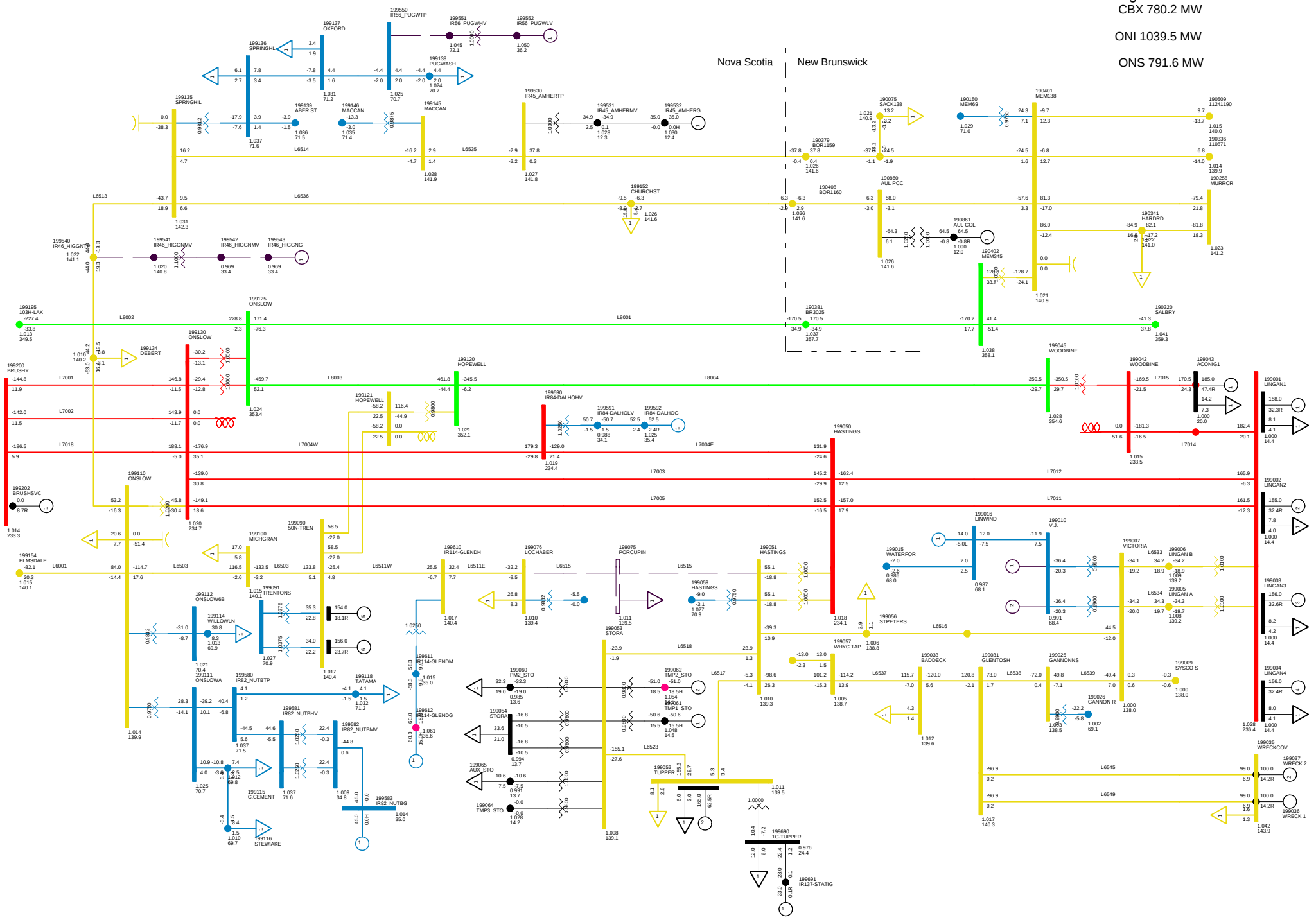

2013 SUMMER PEAK NS EXPORT 200
C13 LOSE L6511
NORTHEASTERN NS TUE, DEC 09 2008 22:53

Total Wind Gen: 290.1 MW | Gross Tupper 165.0 MW | Gross Wreck Cove 200.0 MW | Net Stora Load 178.9 MW
Gross Lingan 625.0 MW | Gross Trenton 310.0 MW | Gross Gas Turbine 0.0 MW | Total BMPC Load 108.5 MW
Gross Pt Aconi 185.0 MW | Gross Tuft's Cove 133.2 MW | Gross Small Hydro 42.9 MW

Bus - VOLTAGE (KV/PU)
Branch - MW/MVAR
Equipment - MW/MVAR
110.0%RATEA
1.0500V 0.950UV
KV: <=25.000 <=69.000 <=138.000 <=230.000 <=345.000 >345.000

Figure ___

NSX 199.8 MW
CBX 779.7 MW
ONI 1036.4 MW
ONS 791.6 MW

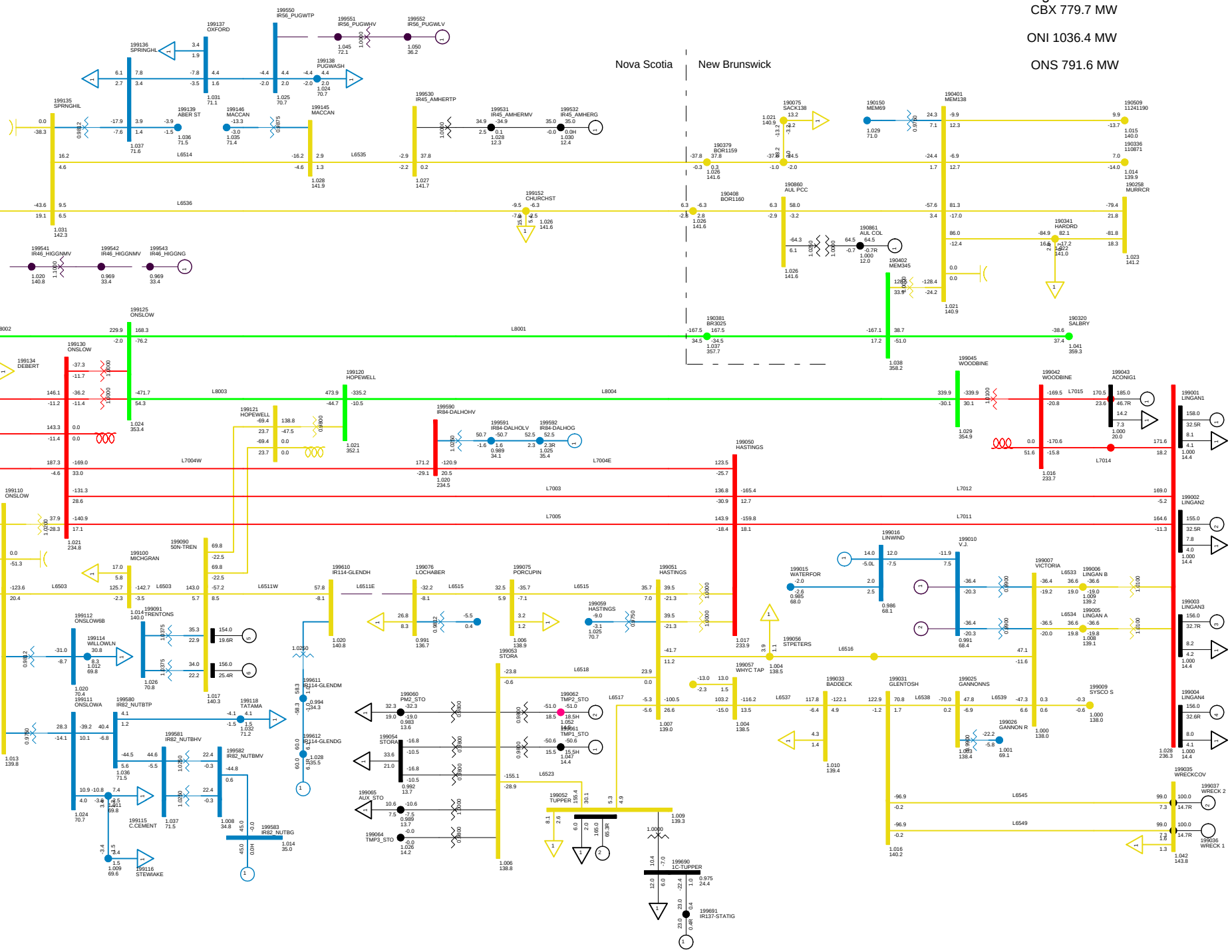

2013 SUMMER PEAK NS EXPORT 200
C14 LOSE L6511E
NORTHEASTERN NS TUE, DEC 09 2008 22:53

Total Wind Gen: 290.1 MW | Gross Tupper 165.0 MW | Gross Wreck Cove 200.0 MW | Net Stora Load 178.9 MW
Gross Lingan 625.0 MW | Gross Trenton 310.0 MW | Gross Gas Turbine 0.0 MW | Total BMPC Load 108.5 MW
Gross Pt Aconi 185.0 MW | Gross Tuft's Cove 133.2 MW | Gross Small Hydro 42.9 MW

Bus - VOLTAGE (KV/PU)
Branch - MW/MVAR
Equipment - MW/MVAR
110.0%RATEA
1.0500V 0.950UV
KV: <=25.000 <=69.000 <=138.000 <=230.000 <=345.000 >345.000

Figure ___

NSX 199.0 MW

CBX 780.4 MW

ONI 1035.5 MW

ONS 791.6 MW

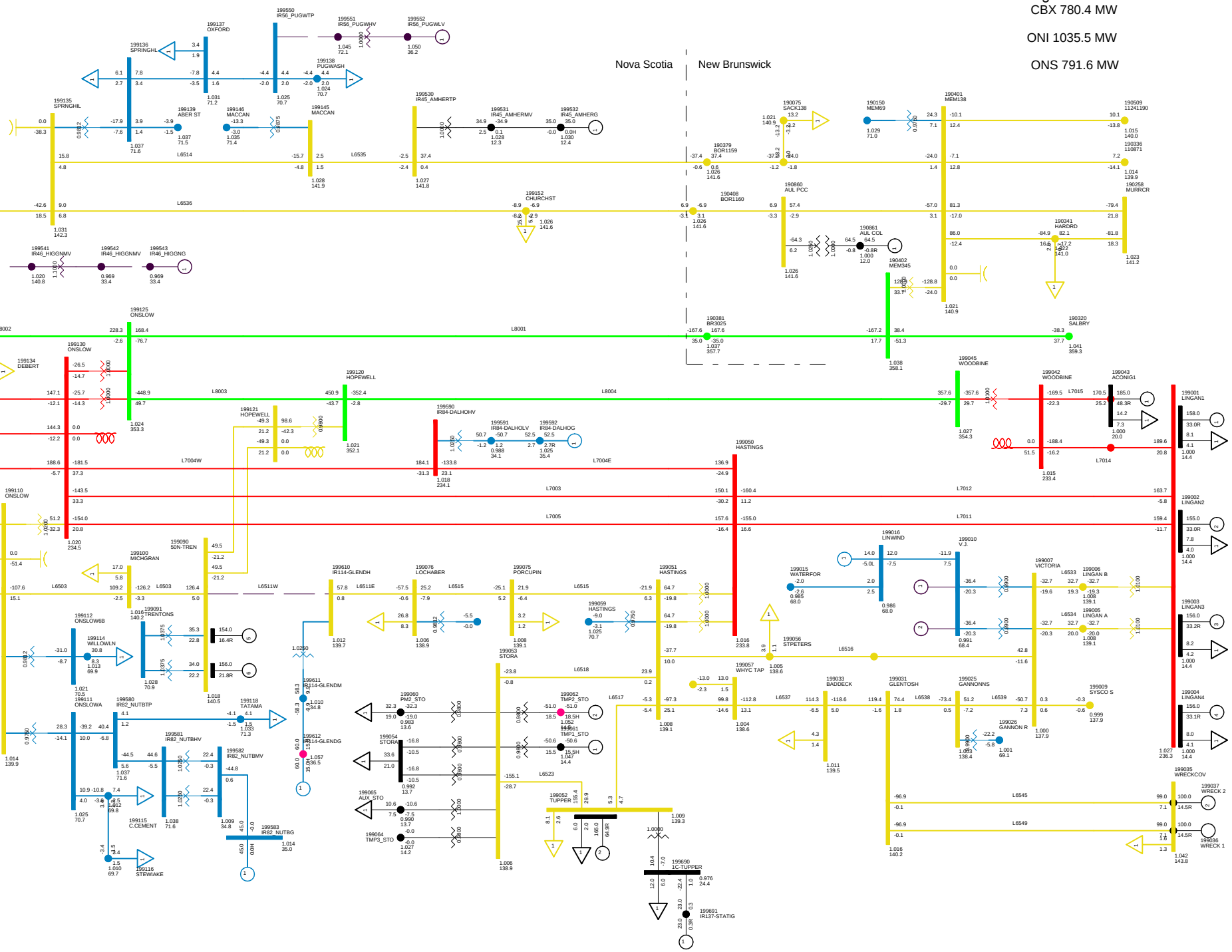

2013 SUMMER PEAK NS EXPORT 200
C15 LOSE L6511W
NORTHEASTERN NS TUE, DEC 09 2008 22:54

Total Wind Gen: 290.1 MW | Gross Tupper 165.0 MW | Gross Wreck Cove 200.0 MW | Net Stora Load 178.9 MW
Gross Lingan 625.0 MW | Gross Trenton 310.0 MW | Gross Gas Turbine 0.0 MW | Total BMPC Load 108.5 MW
Gross Pt Aconi 185.0 MW | Gross Tuft's Cove 133.2 MW | Gross Small Hydro 42.9 MW

Bus - VOLTAGE (KV/PU)
Branch - MW/MVAR
Equipment - MW/MVAR
110.0%RATEA
1.0500V 0.950UV
KV: <=25.000 <=69.000 <=138.000 <=230.000 <=345.000 >345.000

Figure ___

NSX 209.4 MW
CBX 780.0 MW
ONI 1036.9 MW
ONS 791.9 MW

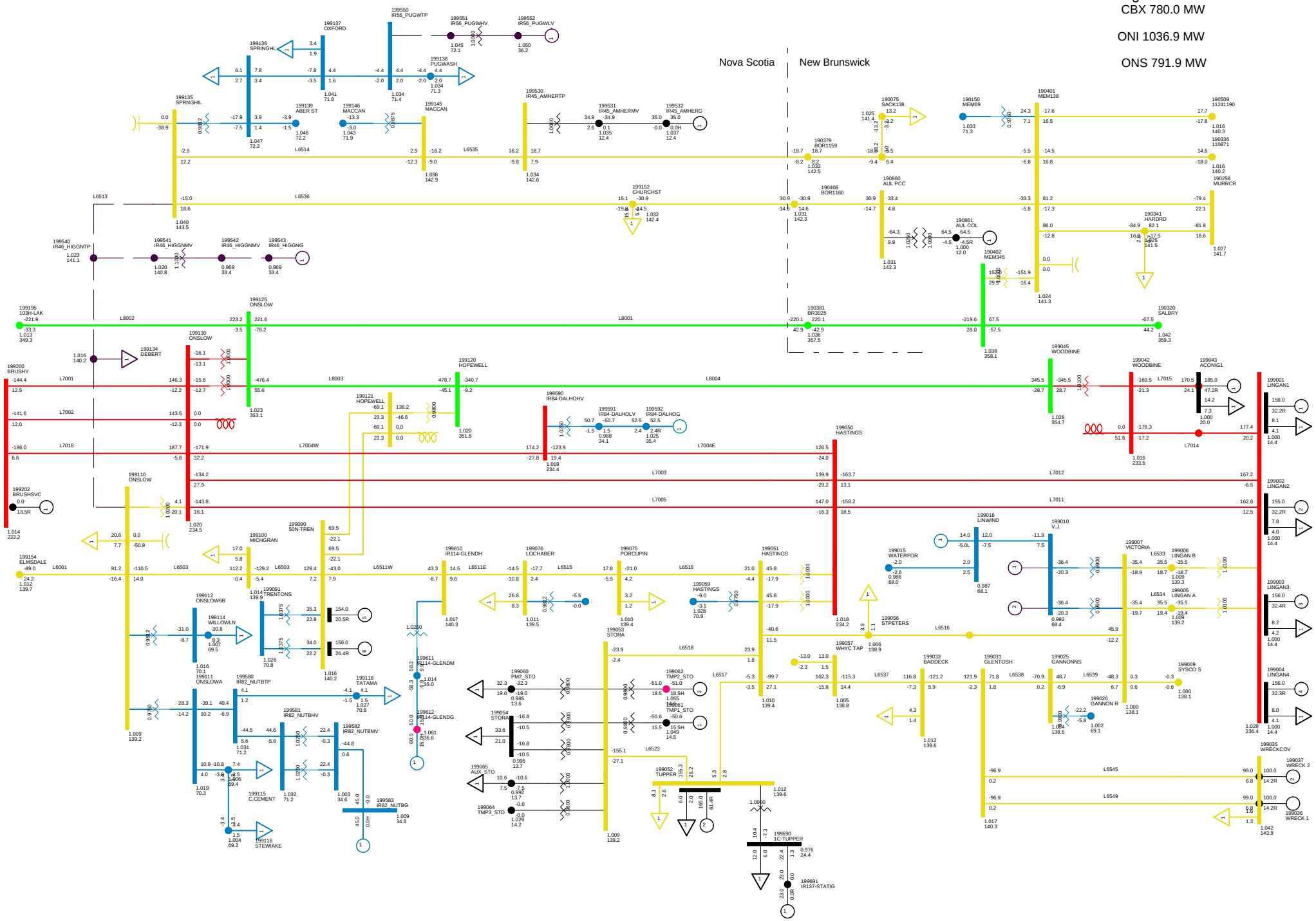

2013 SUMMER PEAK NS EXPORT 200
C16 LOSE L6513
NORTHEASTERN NS TUE, DEC 09 2008 22:54

Total Wind Gen: 290.1 MW | Gross Tupper 165.0 MW | Gross Wreck Cove 200.0 MW | Net Stora Load 178.9 MW
Gross Lingan 625.0 MW | Gross Trenton 310.0 MW | Gross Gas Turbine 0.0 MW | Total BMPC Load 108.5 MW
Gross Pt Aconi 185.0 MW | Gross Tuft's Cove 133.2 MW | Gross Small Hydro 42.9 MW

Bus - VOLTAGE (KV/PU)
Branch - MW/MVAR
Equipment - MW/MVAR
110.0%RATEA
1.0500V 0.950UV
KV: <=25.000 <=69.000 <=138.000 <=230.000 <=345.000 >345.000

Figure ___

NSX 216.1 MW
CBX 780.0 MW
ONI 1036.8 MW
ONS 791.6 MW

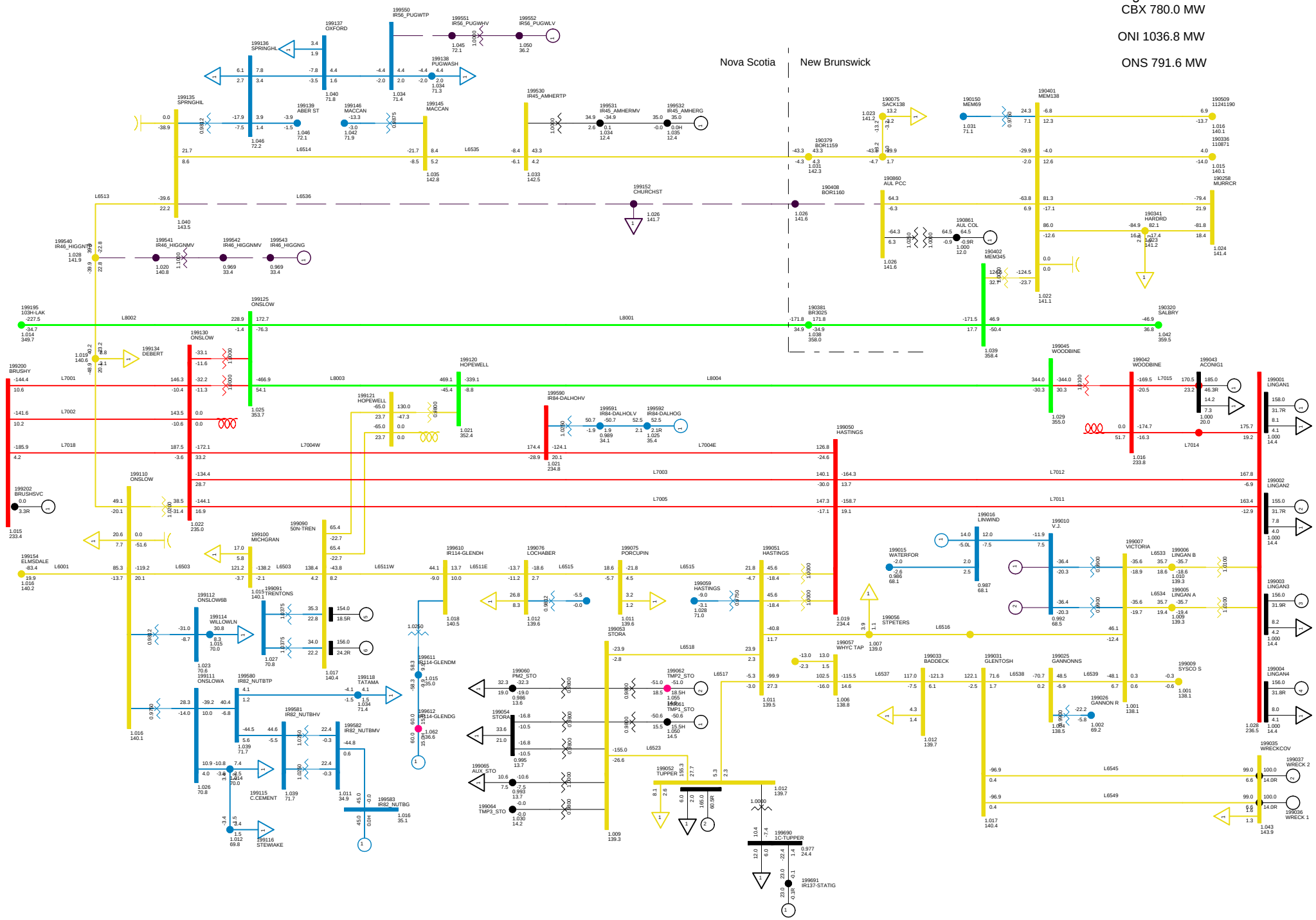

2013 SUMMER PEAK NS EXPORT 200
C17 LOSE L6536
NORTHEASTERN NS TUE, DEC 09 2008 22:54

Total Wind Gen: 290.1 MW | Gross Tupper 165.0 MW | Gross Wreck Cove 200.0 MW | Net Stora Load 178.9 MW
Gross Lingan 625.0 MW | Gross Trenton 310.0 MW | Gross Gas Turbine 0.0 MW | Total BMPC Load 108.5 MW
Gross Pt Aconi 185.0 MW | Gross Tuft's Cove 133.2 MW | Gross Small Hydro 42.9 MW

Bus - VOLTAGE (KV/PU)
Branch - MW/MVAR
Equipment - MW/MVAR
110.0%RATEA
1.0500V 0.950UV
KV: <=25.000 <=69.000 <=138.000 <=230.000 <=345.000 >345.000

Figure ___

NSX 200.2 MW
CBX 780.0 MW
ONI 1036.7 MW
ONS 791.6 MW

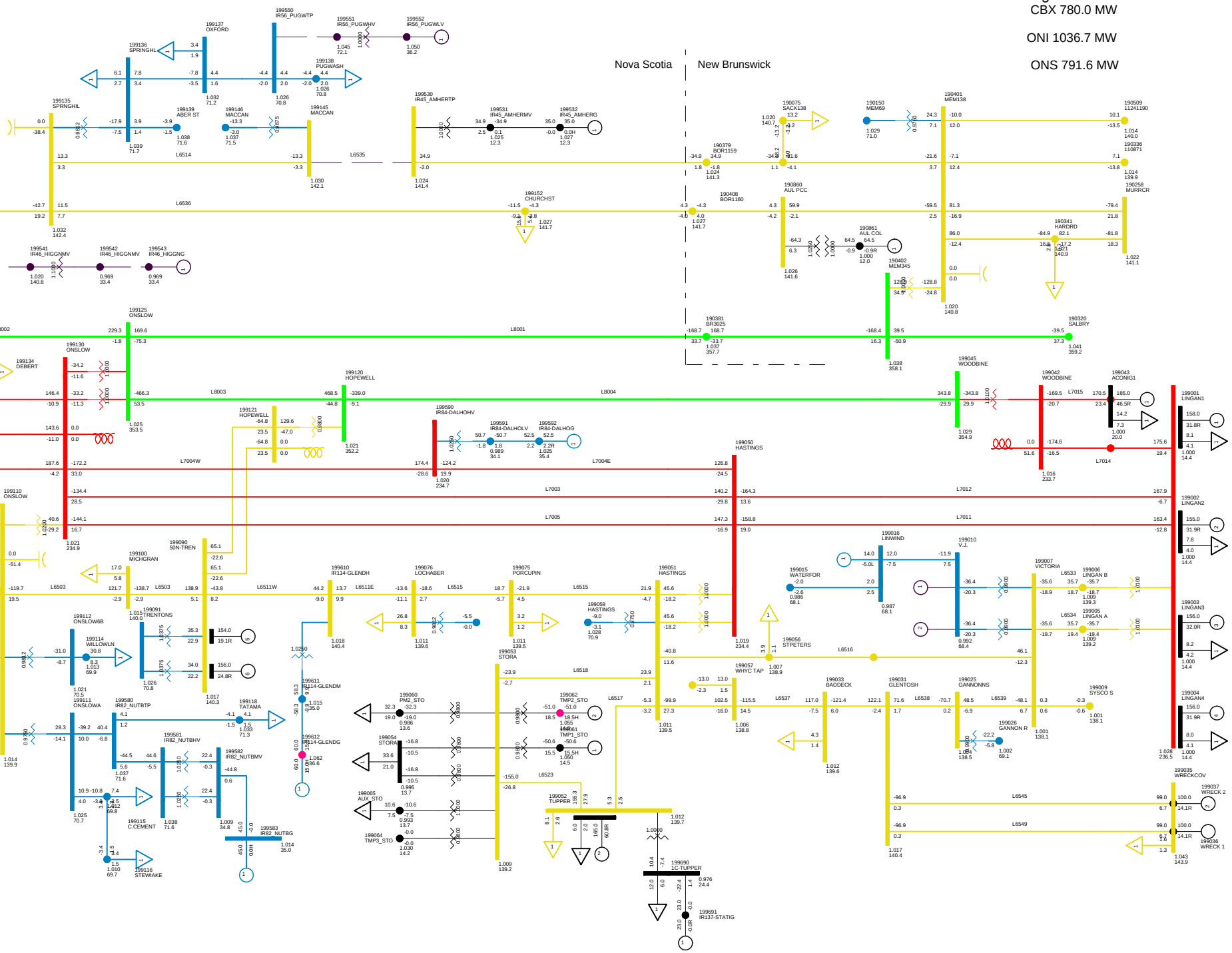

2013 SUMMER PEAK NS EXPORT 200
C18 LOSE L6535S
NORTHEASTERN NS TUE, DEC 09 2008 22:54

Total Wind Gen: 290.1 MW | Gross Tupper 165.0 MW | Gross Wreck Cove 200.0 MW | Net Stora Load 178.9 MW
Gross Lingan 625.0 MW | Gross Trenton 310.0 MW | Gross Gas Turbine 0.0 MW | Total BMPC Load 108.5 MW
Gross Pt Aconi 185.0 MW | Gross Tuft's Cove 133.2 MW | Gross Small Hydro 42.9 MW

Bus - VOLTAGE (KV/PU)
Branch - MW/MVAR
Equipment - MW/MVAR
110.0%RATEA
1.050OV 0.950UV
KV: <=25.000 <=69.000 <=138.000 <=230.000 <=345.000 >345.000

Figure ___

NSX 200.2 MW

CBX 780.0 MW

ONI 1036.8 MW

ONS 791.6 MW

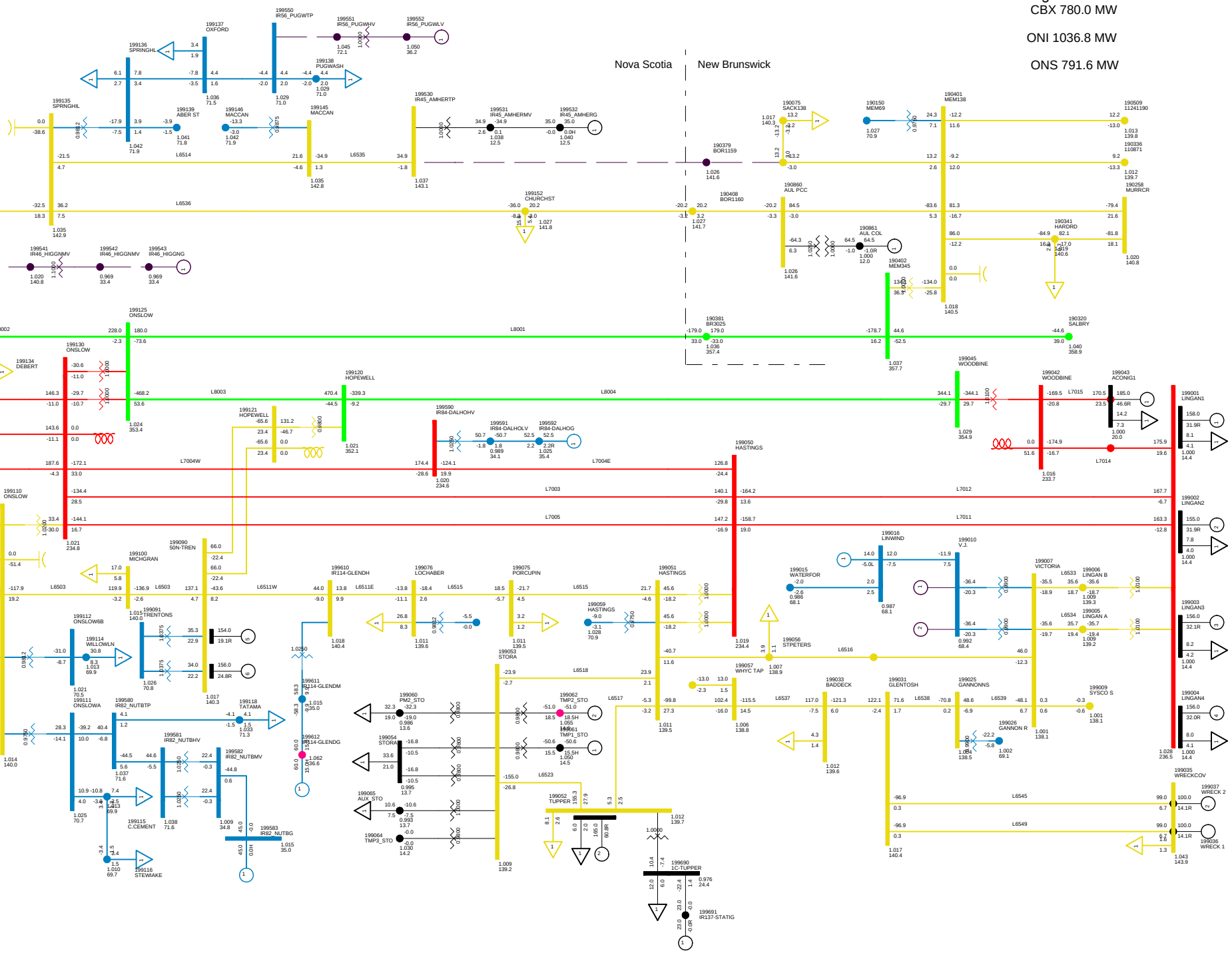

2013 SUMMER PEAK NS EXPORT 200
C19 LOSE L6535N
NORTHEASTERN NS TUE, DEC 09 2008 22:54

Total Wind Gen: 290.1 MW | Gross Tupper 165.0 MW | Gross Wreck Cove 200.0 MW | Net Stora Load 178.9 MW
Gross Lingan 625.0 MW | Gross Trenton 310.0 MW | Gross Gas Turbine 0.0 MW | Total BMPC Load 108.5 MW
Gross Pt Aconi 185.0 MW | Gross Tuft's Cove 133.2 MW | Gross Small Hydro 42.9 MW

Bus - VOLTAGE (KV/PU)
Branch - MW/MVAR
Equipment - MW/MVAR
110.0%RATEA
1.0500V 0.950UV
KV: <=25.000 <=69.000 <=138.000 <=230.000 <=345.000 >345.000

Figure ___

NSX 127.6 MW
CBX 702.8 MW
ONI 963.7 MW
ONS 791.4 MW

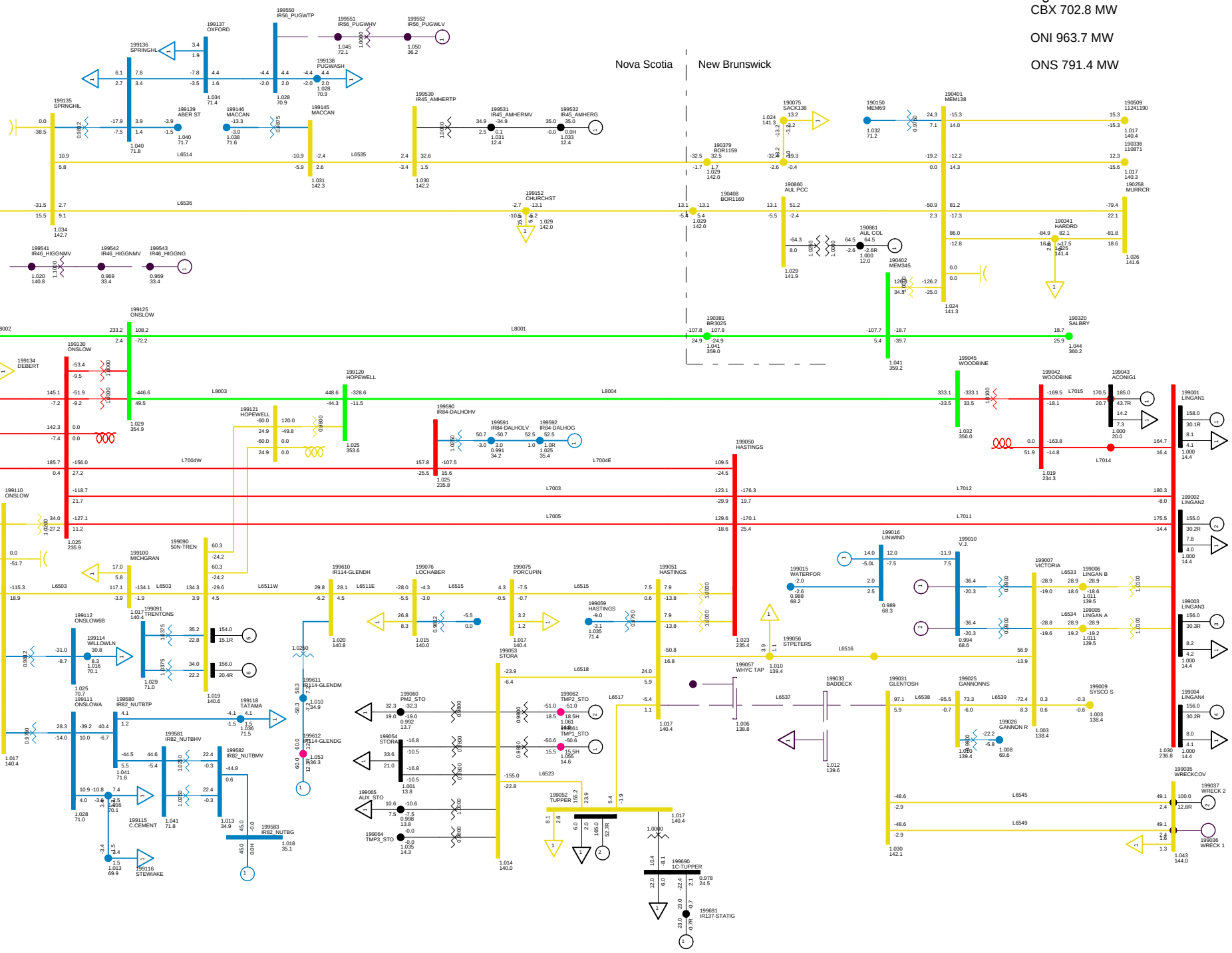

2013 SUMMER PEAK NS EXPORT 200
C20 LOSE L6537
NORTHEASTERN NS TUE, DEC 09 2008 22:54

Total Wind Gen: 290.1 MW | Gross Tupper 165.0 MW | Gross Wreck Cove 100.0 MW | Net Stora Load 178.9 MW
Gross Lingan 625.0 MW | Gross Trenton 310.0 MW | Gross Gas Turbine 0.0 MW | Total BMPC Load 108.5 MW
Gross Pt Aconi 185.0 MW | Gross Tuft's Cove 133.2 MW | Gross Small Hydro 42.9 MW

Bus - VOLTAGE (KV/PU)
Branch - MW/MVAR
Equipment - MW/MVAR
110.0%RATEA
1.050OV 0.950UV
KV: <=25.000 <=69.000 <=138.000 <=230.000 <=345.000 >345.000

Figure ___

NSX 203.3 MW
CBX 783.2 MW
ONI 1039.9 MW
ONS 791.6 MW

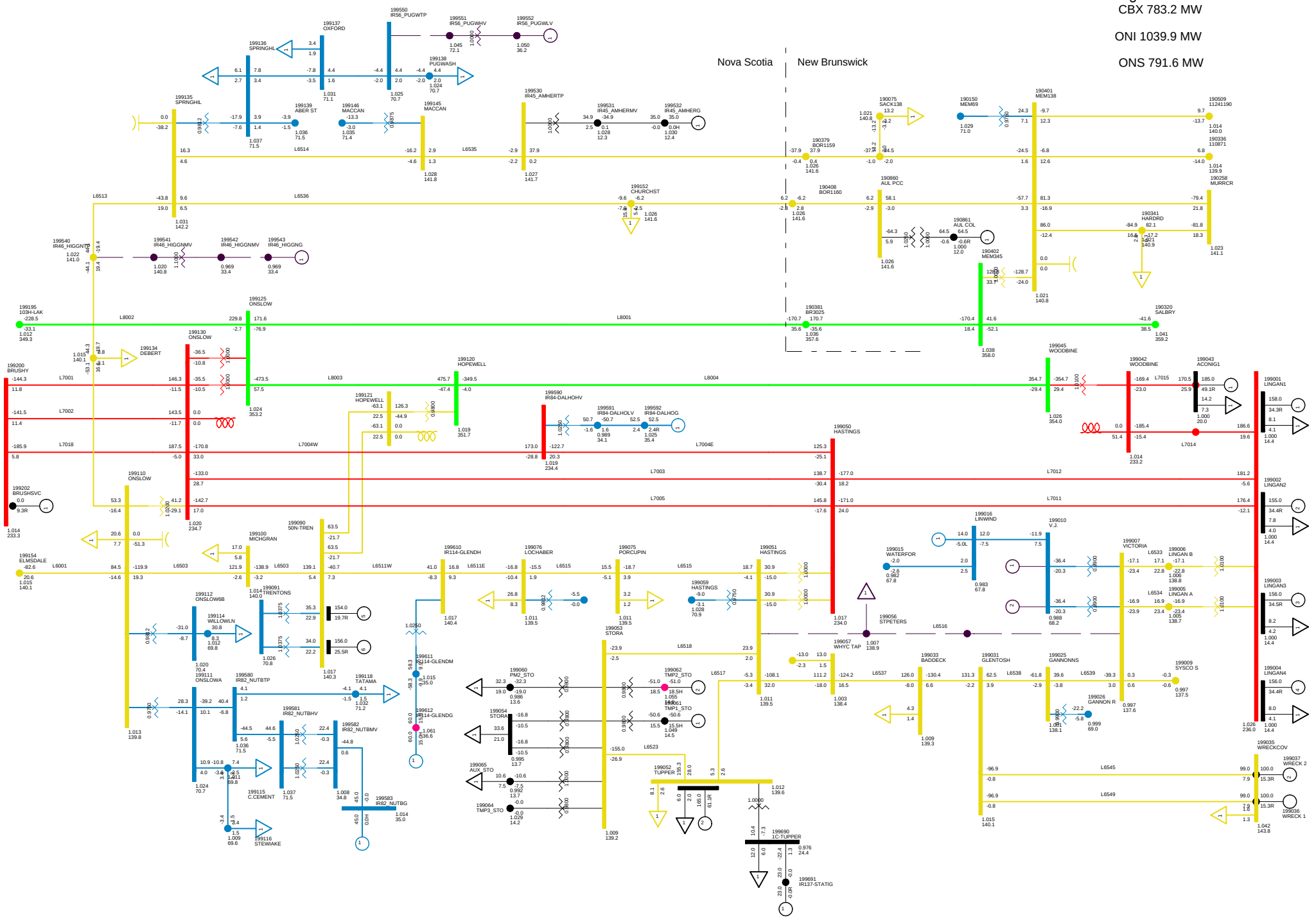

2013 SUMMER PEAK NS EXPORT 200
C21 LOSE L6516
NORTHEASTERN NS TUE, DEC 09 2008 22:54

Total Wind Gen: 290.1 MW | Gross Tupper 165.0 MW | Gross Wreck Cove 200.0 MW | Net Stora Load 178.9 MW
Gross Lingan 625.0 MW | Gross Trenton 310.0 MW | Gross Gas Turbine 0.0 MW | Total BMPC Load 108.5 MW
Gross Pt Aconi 185.0 MW | Gross Tuft's Cove 133.2 MW | Gross Small Hydro 42.9 MW

Bus - VOLTAGE (KV/PU)
Branch - MW/MVAR
Equipment - MW/MVAR
110.0%RATEA
1.050OV 0.950UV
KV: <=25.000 <=69.000 <=138.000 <=230.000 <=345.000 >345.000

Figure ___

NSX 194.8 MW

CBX 774.8 MW

ONI 1031.4 MW

ONS 791.6 MW

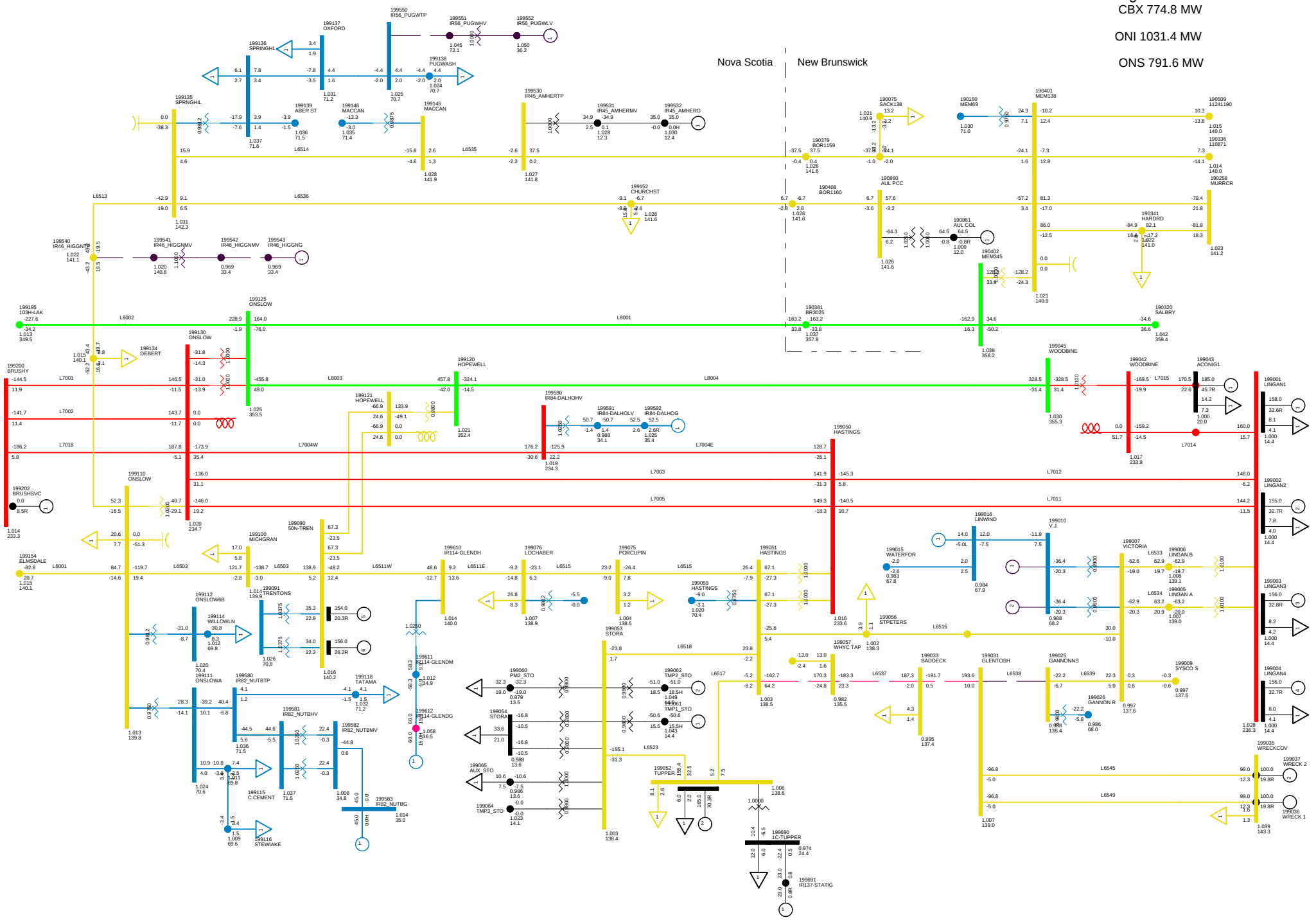

2013 SUMMER PEAK NS EXPORT 200
C22 LOSE L6538
NORTHEASTERN NS TUE, DEC 09 2008 22:54

Total Wind Gen: 290.1 MW | Gross Tupper 165.0 MW | Gross Wreck Cove 200.0 MW | Net Stora Load 178.9 MW
Gross Lingan 625.0 MW | Gross Trenton 310.0 MW | Gross Gas Turbine 0.0 MW | Total BMPC Load 108.5 MW
Gross Pt Aconi 185.0 MW | Gross Tuft's Cove 133.2 MW | Gross Small Hydro 42.9 MW

Bus - VOLTAGE (KV/PU)
Branch - MW/MVAR
Equipment - MW/MVAR
110.0%RATEA
1.0500V 0.950UV
KV: <=25.000 <=69.000 <=138.000 <=230.000 <=345.000 >345.000

Figure ___

Total Wind Gen: 290.1 MW
Gross Tupper 165.0 MW
Gross Wreck Cove 200.0 MW
Gross Lingan 625.0 MW
Gross Trenton 310.0 MW
Gross Gas Turbine 0.0 MW
Gross Pt Aconi 185.0 MW
Gross Tuft's Cove 133.2 MW
Gross Small Hydro 42.9 MW
Net Stora Load 178.9 MW
Total BMPC Load 108.5 MW

NSX 200.1 MW
CBX 780.0 MW
ONI 1036.7 MW
ONS 791.6 MW

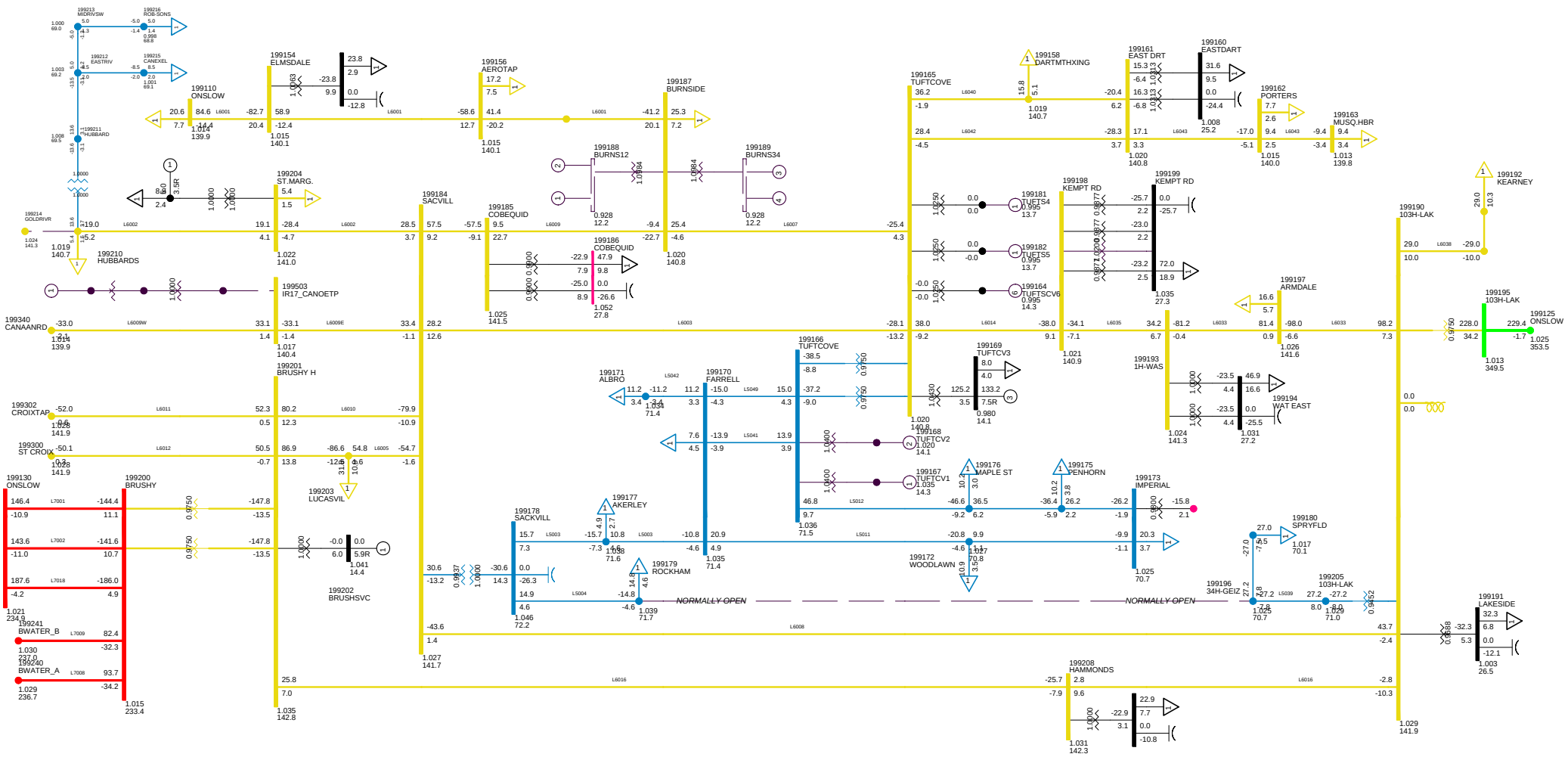

2010 SUMMER PEAK, NSLOAD=1700
NS-NB=+250; NB-NE=1000; CBX=780; ONI=1036 ONS=791
METRO ZONE TUE, DEC 09 2008 22:55

Bus - VOLTAGE (KV/PU)
Branch - MW/MVAR
Equipment - MW/MVAR
100.0%RATEA
1.050OV 0.950UV
KV: <=30.000 <=69.000 <=138.000 <=230.000 <=345.000 >345.000

Figure __

Total Wind Gen: 290.1 MW
Gross Tupper 165.0 MW
Gross Wreck Cove 200.0 MW
Gross Lingan 625.0 MW
Gross Trenton 310.0 MW
Gross Gas Turbine 0.0 MW
Gross Pt Aconi 185.0 MW
Gross Tuft's Cove 133.2 MW
Gross Small Hydro 42.9 MW
Net Stora Load 178.9 MW
Total BMPC Load 108.5 MW

NSX 200.0 MW
CBX 780.0 MW
ONI 1036.7 MW
ONS 791.7 MW

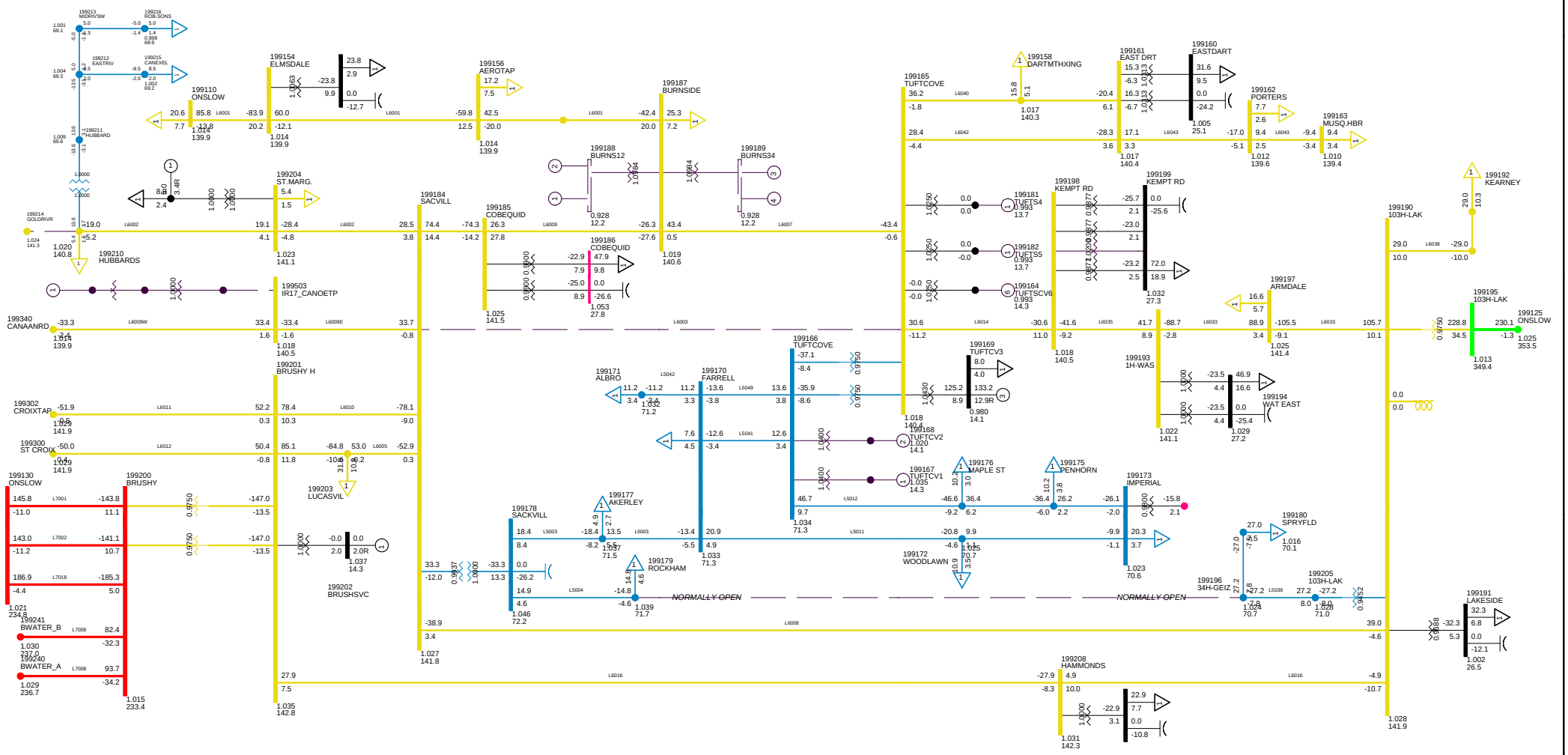

2013 SUMMER PEAK NS EXPORT 200
C23 LOSE L6003
METRO ZONE TUE, DEC 09 2008 22:55

Bus - VOLTAGE (KV/PU)
Branch - MW/MVAR
Equipment - MW/MVAR
100.0%RATEA
1.050OV 0.950UV
KV: <=30.000 <=69.000 <=138.000 <=230.000 <=345.000 >345.000

Figure __

Total Wind Gen: 290.1 MW
Gross Tupper 165.0 MW
Gross Wreck Cove 200.0 MW
Gross Lingan 625.0 MW
Gross Trenton 310.0 MW
Gross Gas Turbine 0.0 MW
Gross Pt Aconi 185.0 MW
Gross Tuft's Cove 133.2 MW
Gross Small Hydro 42.9 MW
Net Stora Load 178.9 MW
Total BMPC Load 108.5 MW

NSX 232.4 MW
CBX 780.0 MW
ONI 1036.8 MW
ONS 759.2 MW

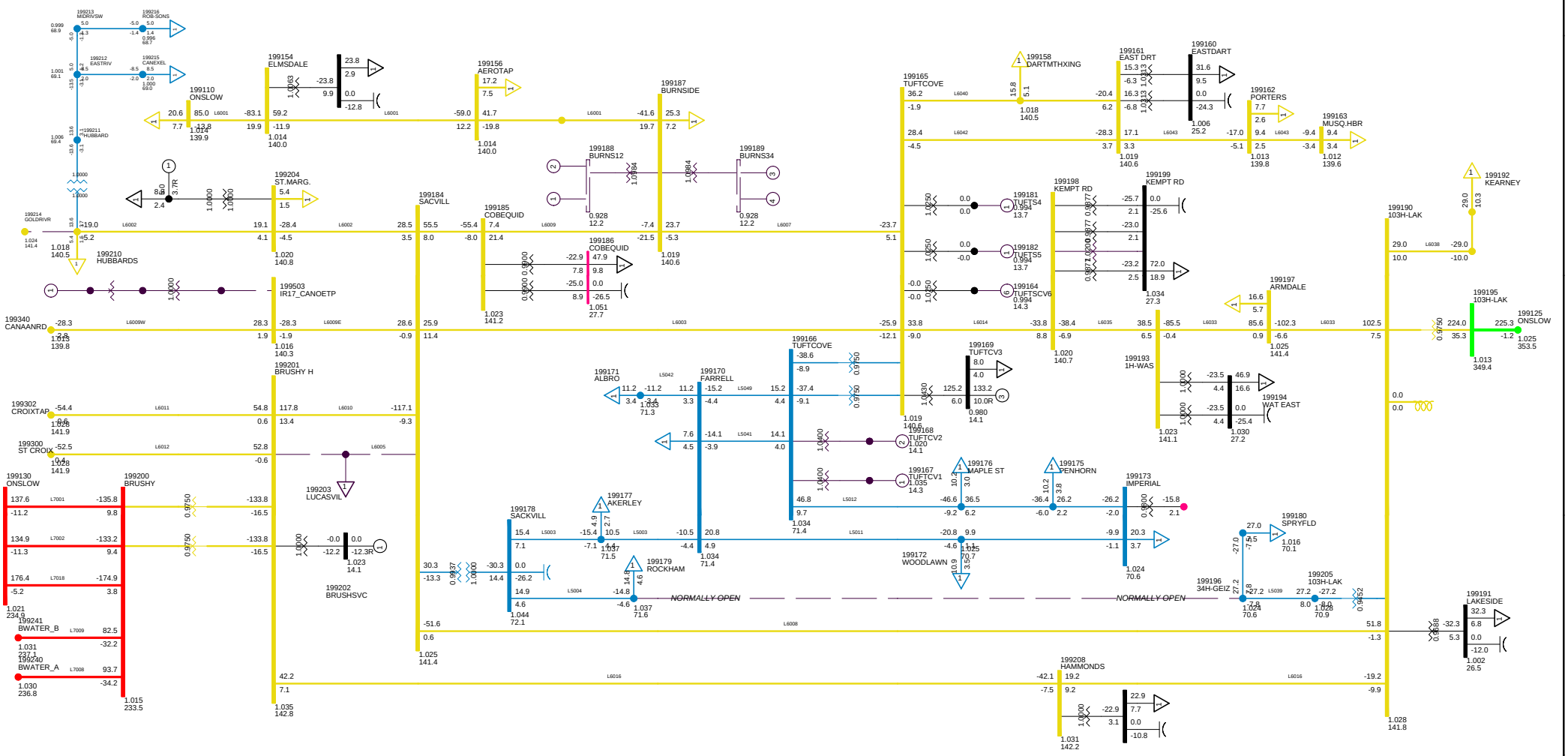

2013 SUMMER PEAK NS EXPORT 200
C24 LOSE L6005
METRO ZONE TUE, DEC 09 2008 22:55

Bus - VOLTAGE (KV/PU)
Branch - MW/MVAR
Equipment - MW/MVAR
100.0%RATEA
1.050OV 0.950UV
KV: <=30.000 <=69.000 <=138.000 <=230.000 <=345.000 >345.000

Figure __

Total Wind Gen: 290.1 MW | Gross Tupper 165.0 MW | Gross Wreck Cove 200.0 MW

Gross Lingan 625.0 MW | Gross Trenton 310.0 MW | Gross Gas Turbine 0.0 MW

Gross Pt Aconi 185.0 MW | Gross Tuft's Cove 133.2 MW | Gross Small Hydro 42.9 MW

Net Stora Load 178.9 MW | Total BMPC Load 108.5 MW

NSX 200.2 MW

CBX 780.0 MW

ONI 1036.7 MW

ONS 791.6 MW

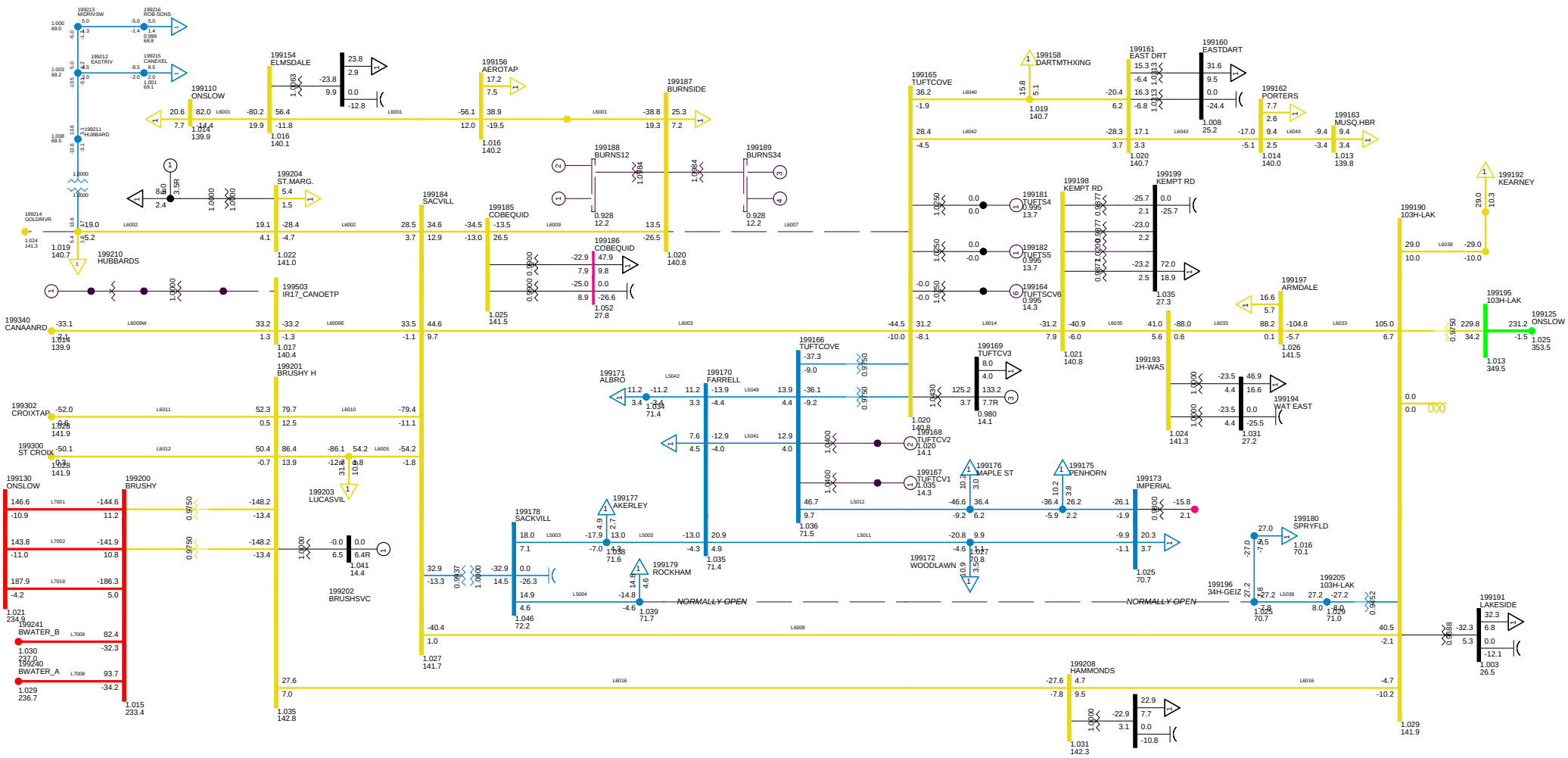

2013 SUMMER PEAK NS EXPORT 200
C25 LOSE L6007
METRO ZONE TUE, DEC 09 2008 22:55

Bus - VOLTAGE (KV/PU)
Branch - MW/MVAR
Equipment - MW/MVAR
100.0%RATEA
1.050OV 0.950UV
KV: <=30.000 <=69.000 <=138.000 <=230.000 <=345.000 >345.000

Figure __

Total Wind Gen: 290.1 MW | Gross Tupper 165.0 MW | Gross Wreck Cove 200.0 MW

Gross Lingan 625.0 MW | Gross Trenton 310.0 MW | Gross Gas Turbine 0.0 MW

Gross Pt Aconi 185.0 MW | Gross Tuft's Cove 133.2 MW | Gross Small Hydro 42.9 MW

Net Stora Load 178.9 MW | Total BMPC Load 108.5 MW

NSX 199.7 MW

CBX 780.0 MW

ONI 1036.7 MW

ONS 792.0 MW

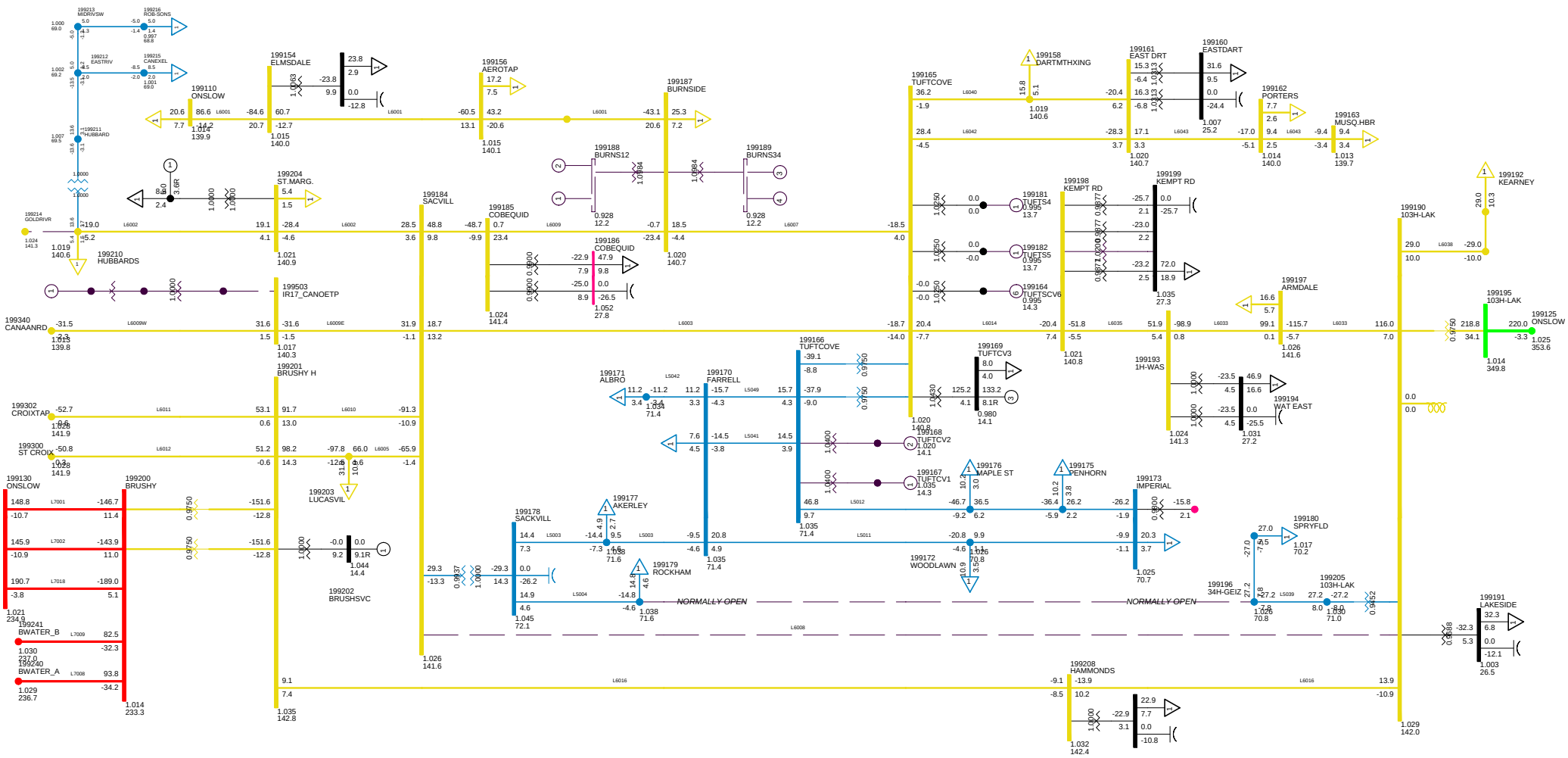

2013 SUMMER PEAK NS EXPORT 200
C26 LOSE L6008
METRO ZONE TUE, DEC 09 2008 22:55

Bus - VOLTAGE (KV/PU)
Branch - MW/MVAR
Equipment - MW/MVAR
100.0%RATEA
1.050OV 0.950UV
KV: <=30.000 <=69.000 <=138.000 <=230.000 <=345.000 >345.000

Figure __

Total Wind Gen: 290.1 MW
Gross Tupper 165.0 MW
Gross Wreck Cove 200.0 MW
Gross Lingan 625.0 MW
Gross Trenton 310.0 MW
Gross Gas Turbine 0.0 MW
Gross Pt Aconi 185.0 MW
Gross Tuft's Cove 133.2 MW
Gross Small Hydro 42.9 MW
Net Stora Load 178.9 MW
Total BMPC Load 108.5 MW

NSX 223.5 MW
CBX 780.0 MW
ONI 1036.7 MW
ONS 768.1 MW

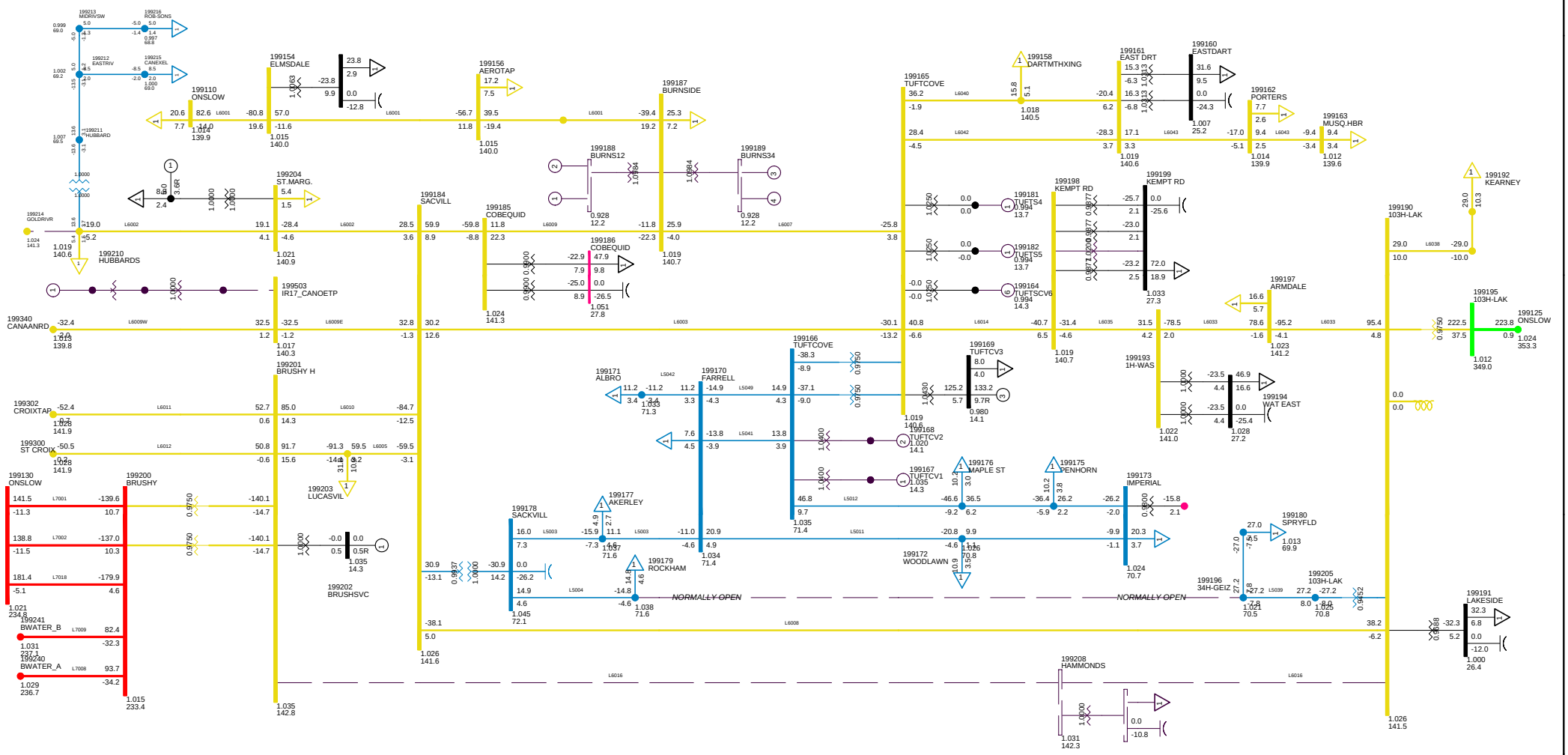

2013 SUMMER PEAK NS EXPORT 200
C27 LOSE L6009
METRO ZONE TUE, DEC 09 2008 22:55

Bus - VOLTAGE (KV/PU)
Branch - MW/MVAR
Equipment - MW/MVAR
100.0%RATEA
1.050OV 0.950UV
KV: <=30.000 <=69.000 <=138.000 <=230.000 <=345.000 >345.000

Figure __

Total Wind Gen: 290.1 MW
Gross Tupper 165.0 MW
Gross Wreck Cove 200.0 MW
Gross Lingan 625.0 MW
Gross Trenton 310.0 MW
Gross Gas Turbine 0.0 MW
Gross Pt Aconi 185.0 MW
Gross Tuft's Cove 133.2 MW
Gross Small Hydro 42.9 MW
Net Stora Load 178.9 MW
Total BMPC Load 108.5 MW

NSX 199.6 MW
CBX 780.0 MW
ONI 1036.7 MW
ONS 792.2 MW

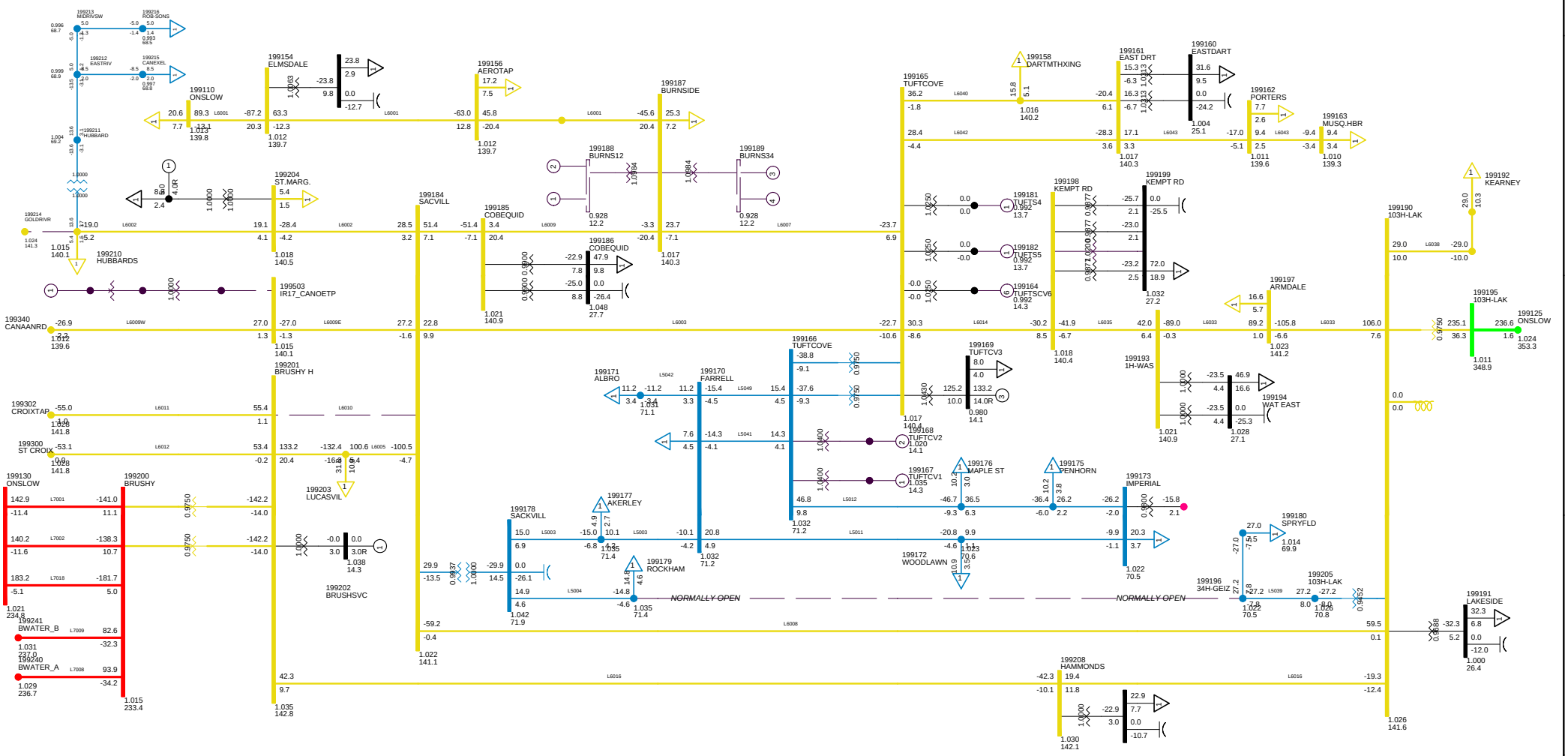

2013 SUMMER PEAK NS EXPORT 200
C28 LOSE L6010
METRO ZONE TUE, DEC 09 2008 22:55

Bus - VOLTAGE (KV/PU)
Branch - MW/MVAR
Equipment - MW/MVAR
100.0%RATEA
1.050OV 0.950UV
KV: <=30.000 <=69.000 <=138.000 <=230.000 <=345.000 >345.000

Figure __

Total Wind Gen: 290.1 MW
Gross Tupper 165.0 MW
Gross Wreck Cove 200.0 MW
Gross Lingan 625.0 MW
Gross Trenton 310.0 MW
Gross Gas Turbine 0.0 MW
Gross Pt Aconi 185.0 MW
Gross Tuft's Cove 133.2 MW
Gross Small Hydro 42.9 MW
Net Stora Load 178.9 MW
Total BMPC Load 108.5 MW

NSX 200.1 MW
CBX 780.0 MW
ONI 1036.7 MW
ONS 791.6 MW

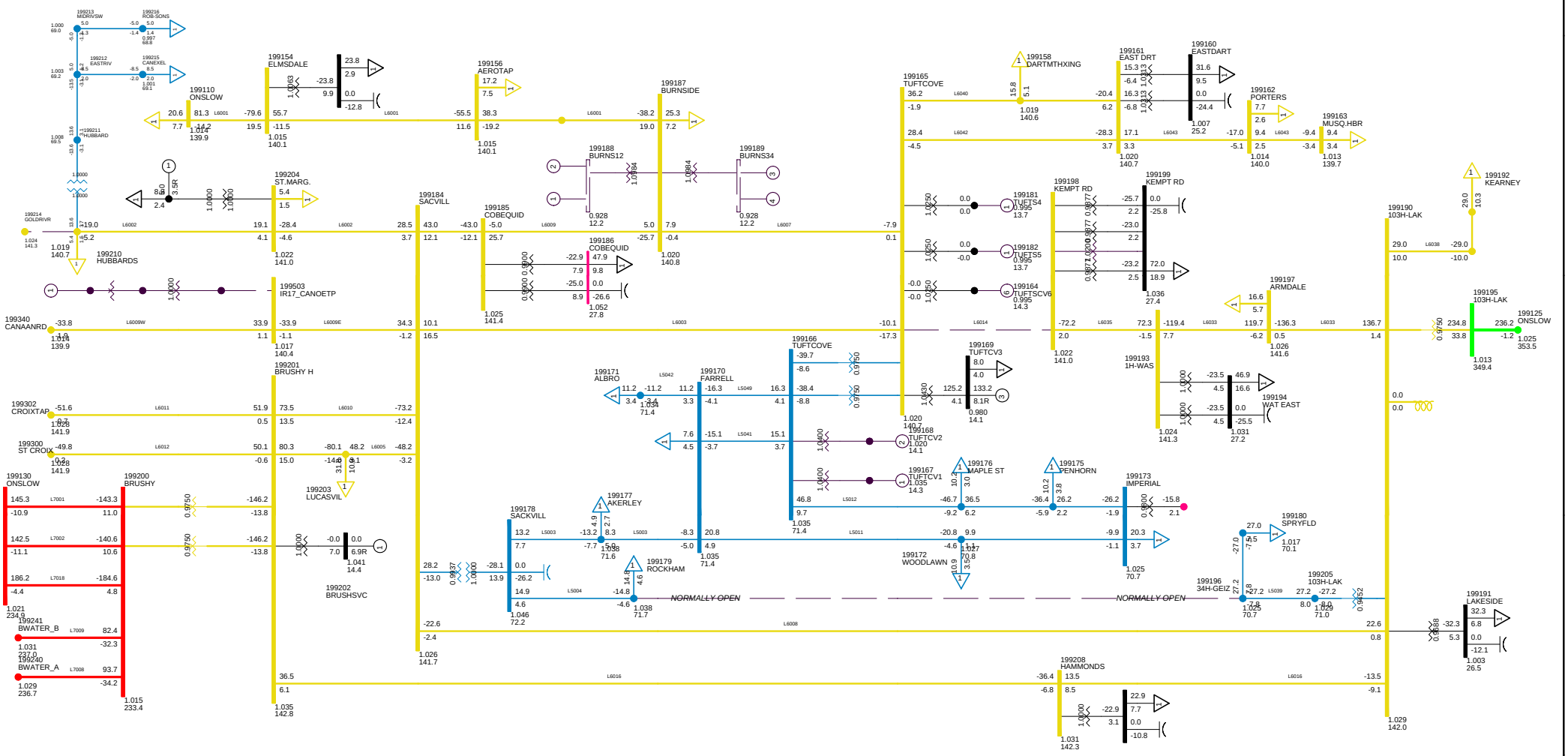

2013 SUMMER PEAK NS EXPORT 200
C29 LOSE L6014
METRO ZONE TUE, DEC 09 2008 22:55

Bus - VOLTAGE (KV/PU)
Branch - MW/MVAR
Equipment - MW/MVAR
100.0%RATEA
1.050OV 0.950UV
KV: <=30.000 <=69.000 <=138.000 <=230.000 <=345.000 >345.000

Figure __

Total Wind Gen: 290.1 MW
Gross Tupper 165.0 MW
Gross Wreck Cove 200.0 MW
Gross Lingan 625.0 MW
Gross Trenton 310.0 MW
Gross Gas Turbine 0.0 MW
Gross Pt Aconi 185.0 MW
Gross Tuft's Cove 133.2 MW
Gross Small Hydro 42.9 MW
Net Stora Load 178.9 MW
Total BMPC Load 108.5 MW

NSX 223.5 MW
CBX 780.0 MW
ONI 1036.7 MW
ONS 768.1 MW

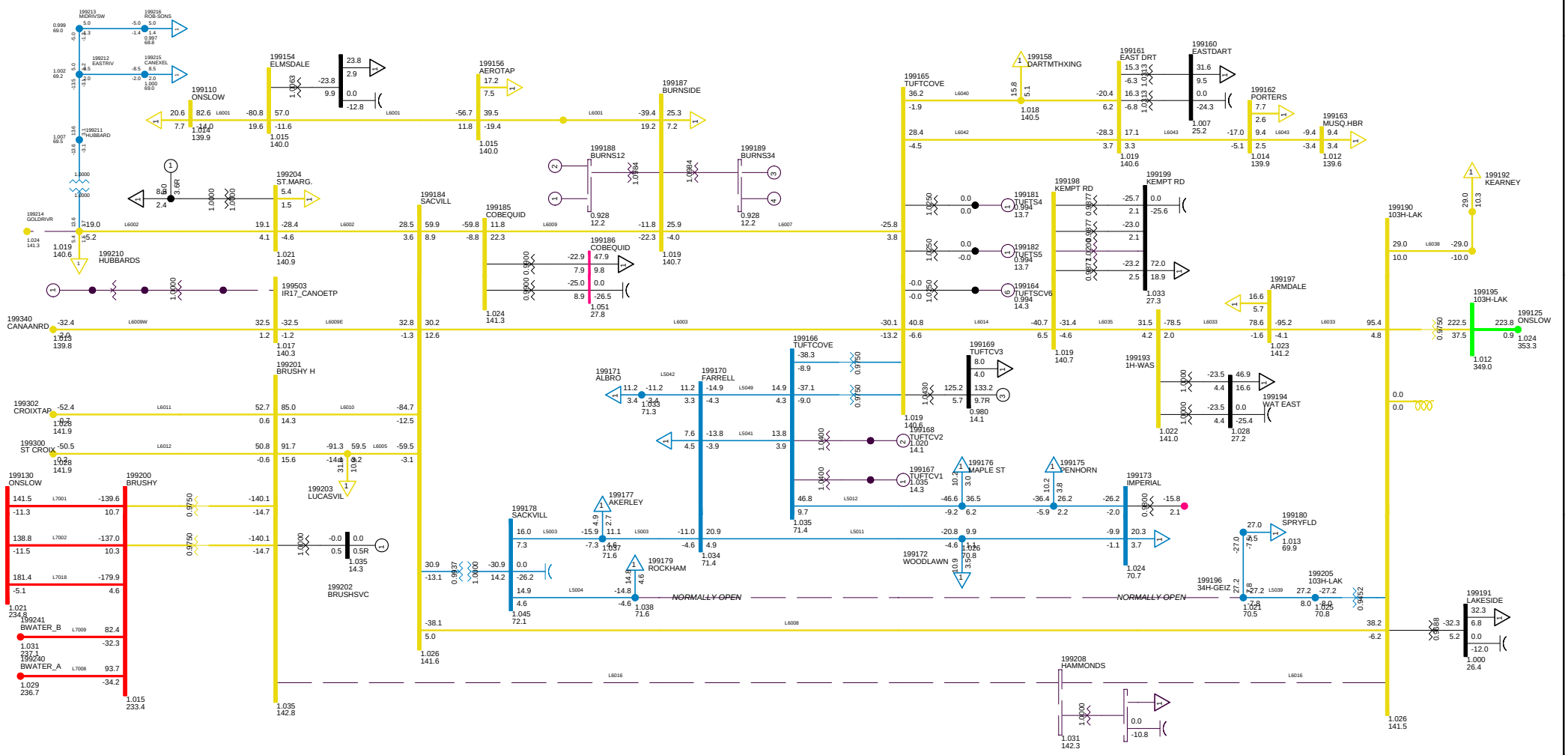

2013 SUMMER PEAK NS EXPORT 200
C30 LOSE L6016
METRO ZONE TUE, DEC 09 2008 22:56

Bus - VOLTAGE (KV/PU)
Branch - MW/MVAR
Equipment - MW/MVAR
100.0%RATEA
1.050OV 0.950UV
KV: <=30.000 <=69.000 <=138.000 <=230.000 <=345.000 >345.000

Figure __

Total Wind Gen: 290.1 MW
Gross Tupper 165.0 MW
Gross Wreck Cove 200.0 MW
Gross Lingan 625.0 MW
Gross Trenton 310.0 MW
Gross Gas Turbine 0.0 MW
Gross Pt Aconi 185.0 MW
Gross Tuft's Cove 133.2 MW
Gross Small Hydro 42.9 MW
Net Stora Load 178.9 MW
Total BMPC Load 108.5 MW

NSX 238.9 MW
CBX 780.0 MW
ONI 1036.7 MW
ONS 752.7 MW

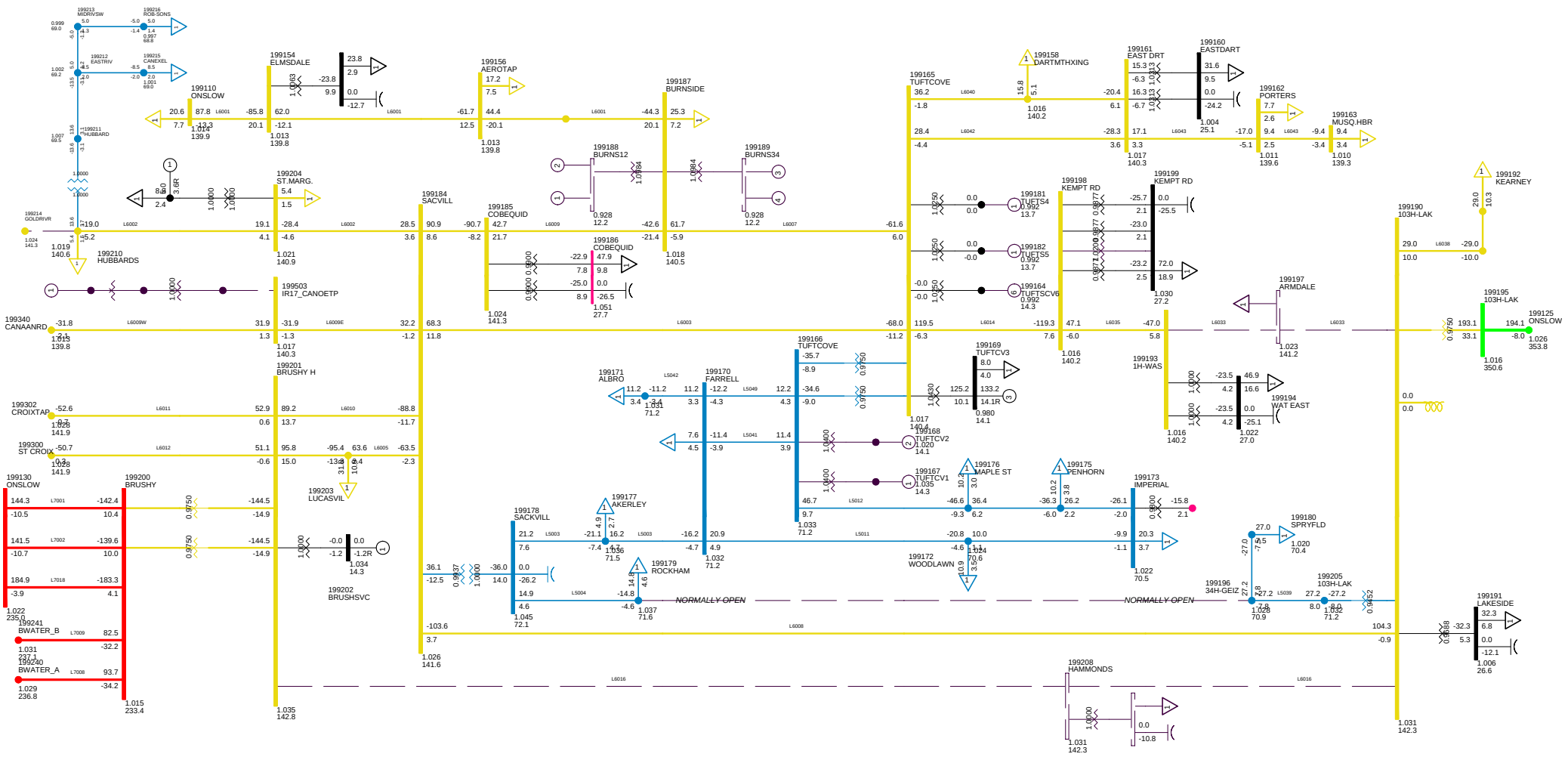

2013 SUMMER PEAK NS EXPORT 200
C31 LOSE L6033
METRO ZONE TUE, DEC 09 2008 22:56

Bus - VOLTAGE (KV/PU)
Branch - MW/MVAR
Equipment - MW/MVAR
100.0%RATEA
1.050OV 0.950UV
KV: <=30.000 <=69.000 <=138.000 <=230.000 <=345.000 >345.000

Figure __

Total Wind Gen: 290.1 MW
Gross Tupper 165.0 MW
Gross Wreck Cove 200.0 MW
Gross Lingan 625.0 MW
Gross Trenton 310.0 MW
Gross Gas Turbine 0.0 MW
Gross Pt Aconi 185.0 MW
Gross Tuft's Cove 133.2 MW
Gross Small Hydro 42.9 MW
Net Stora Load 178.9 MW
Total BMPC Load 108.5 MW

NSX 199.8 MW
CBX 780.0 MW
ONI 1036.7 MW
ONS 791.9 MW

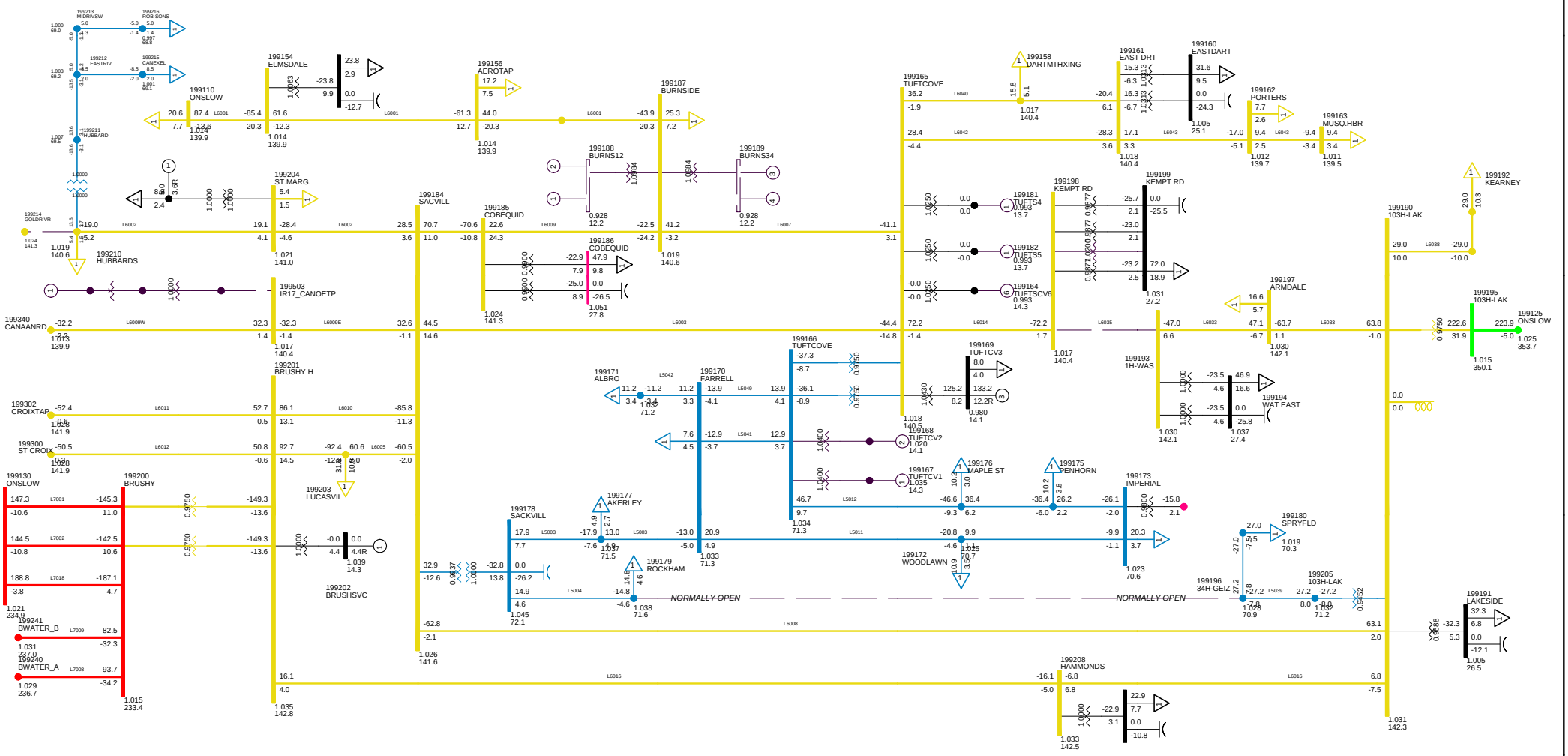

2013 SUMMER PEAK NS EXPORT 200
C32 LOSE L6035
METRO ZONE TUE, DEC 09 2008 22:56

Bus - VOLTAGE (KV/PU)
Branch - MW/MVAR
Equipment - MW/MVAR
100.0%RATEA
1.050OV 0.950UV
KV: <=30.000 <=69.000 <=138.000 <=230.000 <=345.000 >345.000

Figure __

Total Wind Gen: 290.1 MW
Gross Tupper 165.0 MW
Gross Wreck Cove 200.0 MW
Gross Lingan 625.0 MW
Gross Trenton 310.0 MW
Gross Gas Turbine 0.0 MW
Gross Pt Aconi 185.0 MW
Gross Tuft's Cove 133.2 MW
Gross Small Hydro 42.9 MW
Net Stora Load 178.9 MW
Total BMPC Load 108.5 MW

NSX 218.5 MW
CBX 779.7 MW
ONI 1036.0 MW
ONS 772.5 MW

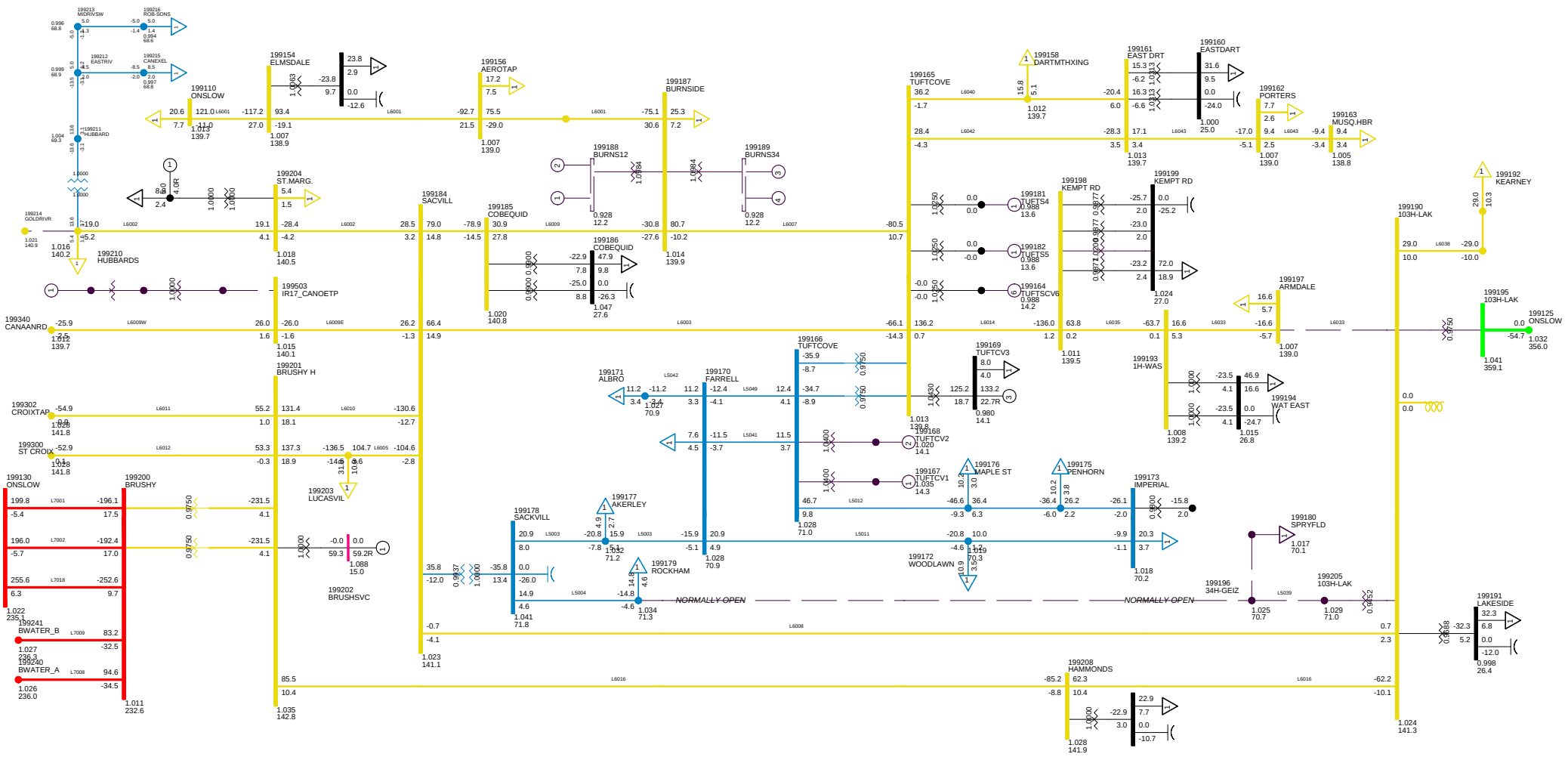

2013 SUMMER PEAK NS EXPORT 200
C33 LOSE 103H-B61
METRO ZONE TUE, DEC 09 2008 22:56

Bus - VOLTAGE (KV/PU)
Branch - MW/MVAR
Equipment - MW/MVAR
100.0%RATEA
1.050OV 0.950UV
KV: <=30.000 <=69.000 <=138.000 <=230.000 <=345.000 >345.000

Figure __

Total Wind Gen: 290.1 MW
Gross Tupper 165.0 MW
Gross Wreck Cove 200.0 MW
Gross Lingan 625.0 MW
Gross Trenton 310.0 MW
Gross Gas Turbine 0.0 MW
Gross Pt Aconi 185.0 MW
Gross Tuft's Cove 133.2 MW
Gross Small Hydro 42.9 MW
Net Stora Load 178.9 MW
Total BMPC Load 108.5 MW

NSX 223.3 MW
CBX 779.8 MW
ONI 1036.2 MW
ONS 768.0 MW

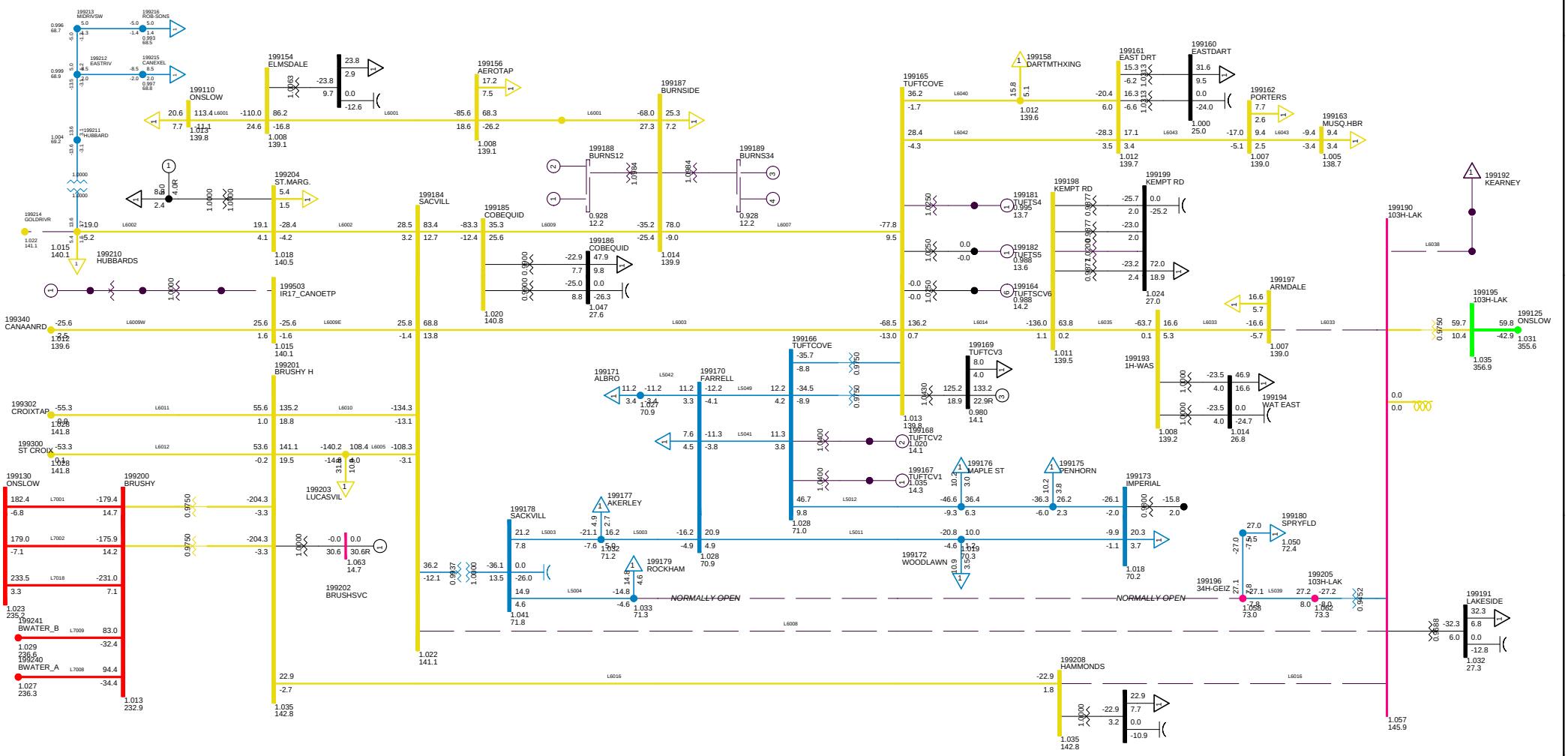

2013 SUMMER PEAK NS EXPORT 200
C34 LOSE 103H-B62
METRO ZONE TUE, DEC 09 2008 22:56

Bus - VOLTAGE (KV/PU)
Branch - MW/MVAR
Equipment - MW/MVAR
100.0%RATEA
1.050OV 0.950UV
KV: <=30.000 <=69.000 <=138.000 <=230.000 <=345.000 >345.000

Figure __

Total Wind Gen: 290.1 MW
Gross Tupper 165.0 MW
Gross Wreck Cove 200.0 MW
Gross Lingan 625.0 MW
Gross Trenton 310.0 MW
Gross Gas Turbine 0.0 MW
Gross Pt Aconi 185.0 MW
Gross Tuft's Cove 133.2 MW
Gross Small Hydro 42.9 MW
Net Stora Load 178.9 MW
Total BMPC Load 108.5 MW

NSX 200.1 MW
CBX 780.0 MW
ONI 1036.7 MW
ONS 791.6 MW

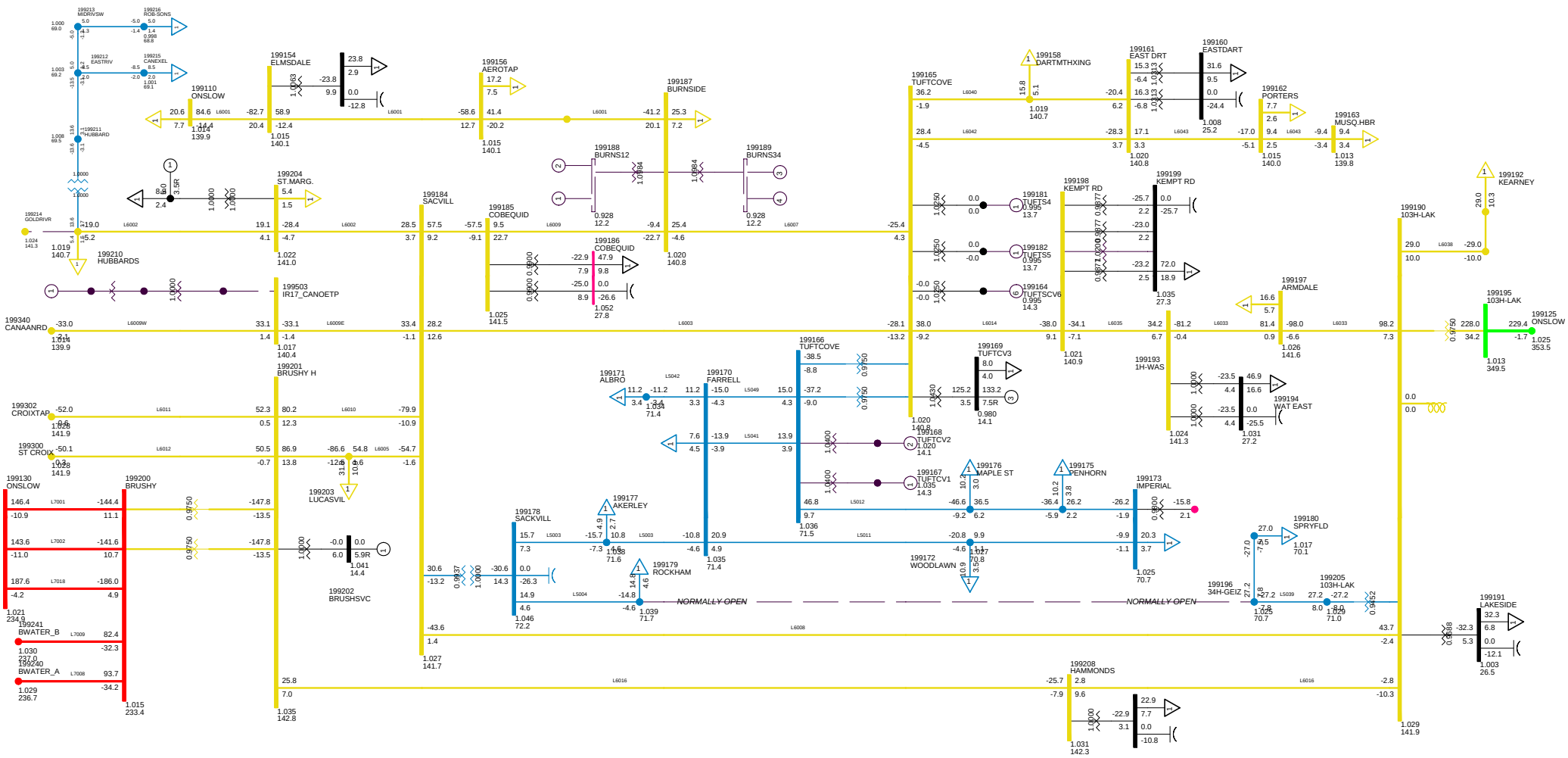

2010 SUMMER PEAK, NSLOAD=1700
NS-NB=+250; NB-NE=1000; CBX=780; ONI=1036 ONS=791
METRO ZONE TUE, DEC 09 2008 22:56

Bus - VOLTAGE (KV/PU)
Branch - MW/MVAR
Equipment - MW/MVAR
100.0%RATEA
1.050OV 0.950UV
KV: <=30.000 <=69.000 <=138.000 <=230.000 <=345.000 >345.000

Figure __

Total Wind Gen: 290.1 MW
Gross Tupper 165.0 MW
Gross Wreck Cove 200.0 MW
Gross Lingan 625.0 MW
Gross Trenton 310.0 MW
Gross Gas Turbine 0.0 MW
Gross Pt Aconi 185.0 MW
Gross Tuft's Cove 133.2 MW
Gross Small Hydro 42.9 MW
Net Stora Load 178.9 MW
Total BMPC Load 108.5 MW

NSX 230.7 MW
CBX 780.0 MW
ONI 1036.8 MW
ONS 760.9 MW

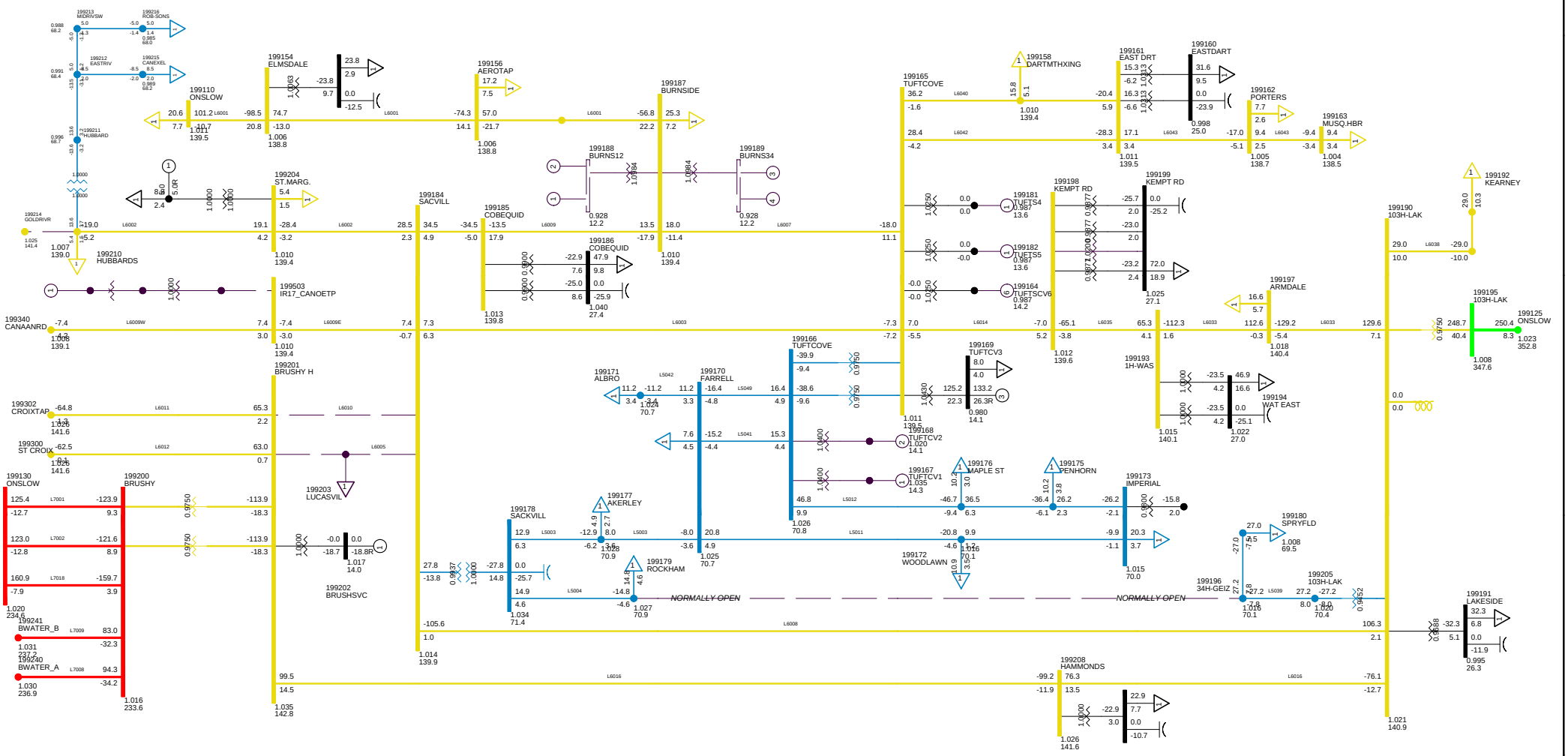

2013 SUMMER PEAK NS EXPORT 200
C35 DCT L6005+L6010
METRO ZONE TUE, DEC 09 2008 22:56

Figure __

Total Wind Gen: 290.1 MW
Gross Tupper 165.0 MW
Gross Wreck Cove 200.0 MW
Gross Lingan 625.0 MW
Gross Trenton 310.0 MW
Gross Gas Turbine 0.0 MW
Gross Pt Aconi 185.0 MW
Gross Tuft's Cove 133.2 MW
Gross Small Hydro 42.9 MW
Net Stora Load 178.9 MW
Total BMPC Load 108.5 MW

NSX 232.4 MW
CBX 780.0 MW
ONI 1036.8 MW
ONS 759.2 MW

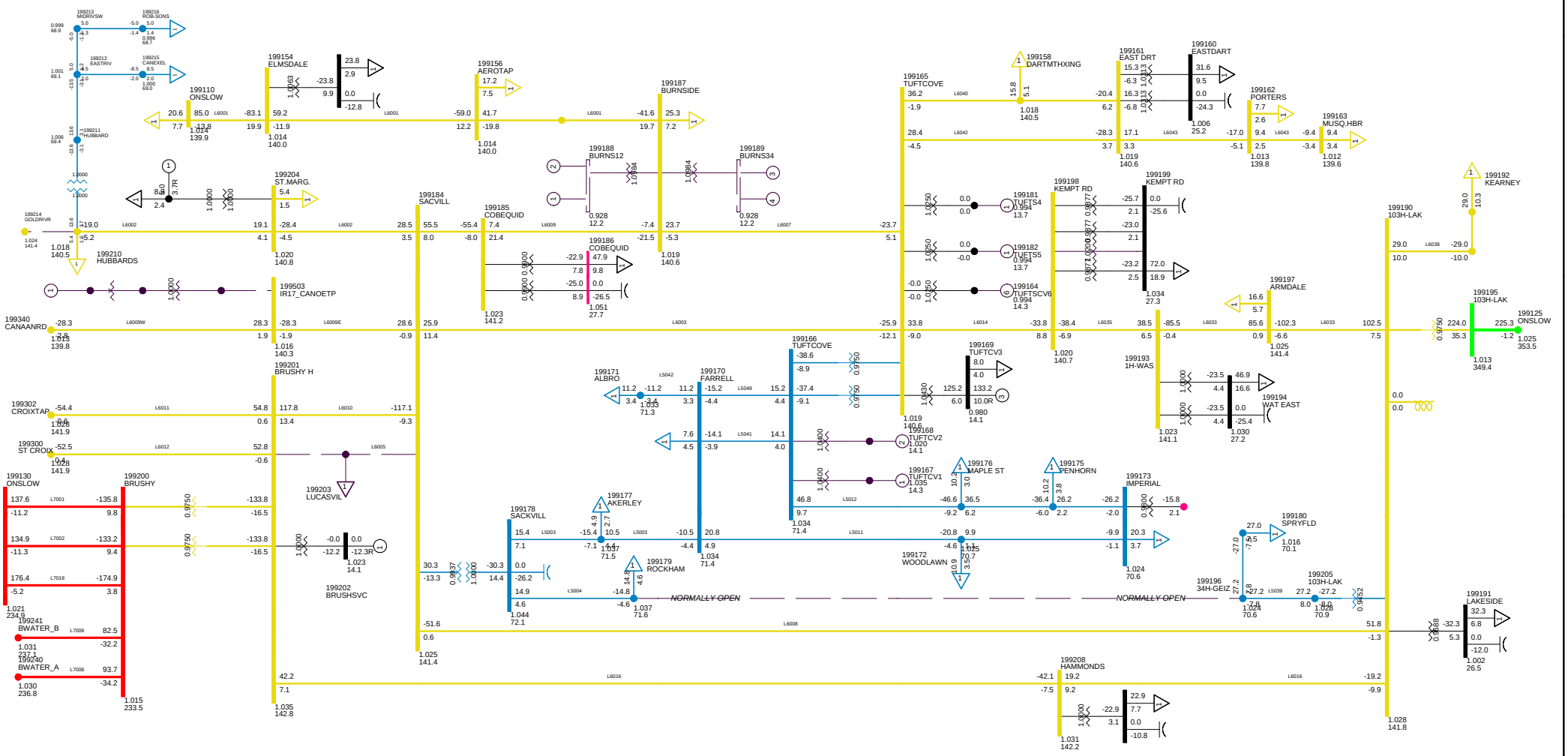

2010 SUMMER PEAK, NSLOAD=1700
NS-NB=+250; NB-NE=1000; CBX=780; ONI=1036 ONS=791
METRO ZONE TUE, DEC 09 2008 22:56

Bus - VOLTAGE (KV/PU)
Branch - MW/MVAR
Equipment - MW/MVAR
100.0%RATEA
1.050OV 0.950UV
KV: <=30.000 <=69.000 <=138.000 <=230.000 <=345.000 >345.000

Figure __

Total Wind Gen: 290.1 MW | Gross Tupper 165.0 MW | Gross Wreck Cove 200.0 MW

Gross Lingan 625.0 MW | Gross Trenton 310.0 MW | Gross Gas Turbine 0.0 MW

Gross Pt Aconi 185.0 MW | Gross Tuft's Cove 133.2 MW | Gross Small Hydro 42.9 MW

Net Stora Load 178.9 MW | Total BMPC Load 108.5 MW

NSX 255.7 MW

CBX 780.0 MW

ONI 1036.8 MW

ONS 735.8 MW

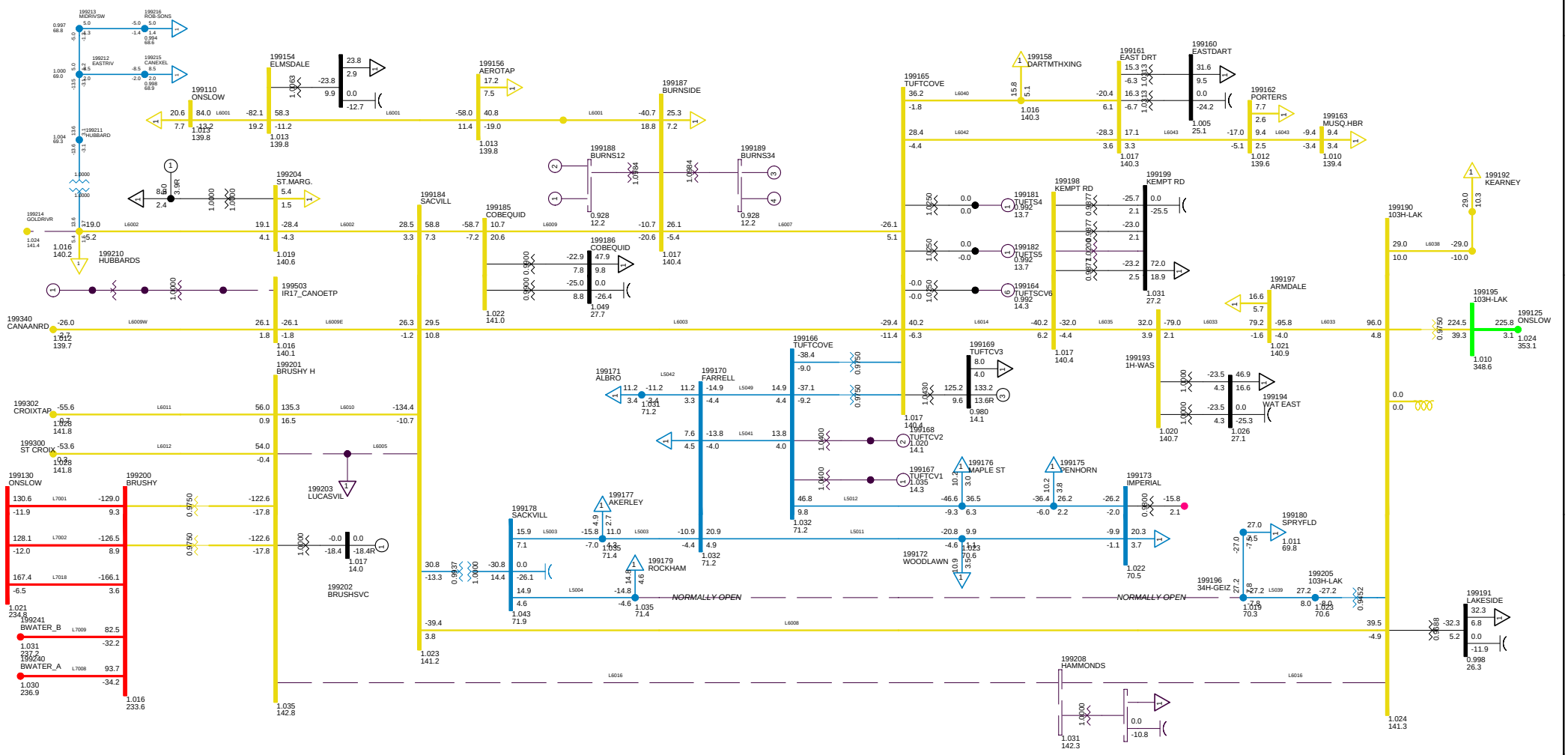

2013 SUMMER PEAK NS EXPORT 200
C37 DCT L6005 L6016
METRO ZONE TUE, DEC 09 2008 22:57

Bus - VOLTAGE (KV/PU)
Branch - MW/MVAR
Equipment - MW/MVAR
100.0%RATEA
1.050OV 0.950UV
KV: <=30.000 <=69.000 <=138.000 <=230.000 <=345.000 >345.000

Figure __

Total Wind Gen: 290.1 MW
Gross Tupper 165.0 MW
Gross Wreck Cove 200.0 MW
Gross Lingan 625.0 MW
Gross Trenton 310.0 MW
Gross Gas Turbine 0.0 MW
Gross Pt Aconi 185.0 MW
Gross Tuft's Cove 133.2 MW
Gross Small Hydro 42.9 MW
Net Stora Load 178.9 MW
Total BMPC Load 108.5 MW

NSX 249.0 MW
CBX 780.0 MW
ONI 1036.8 MW
ONS 742.5 MW

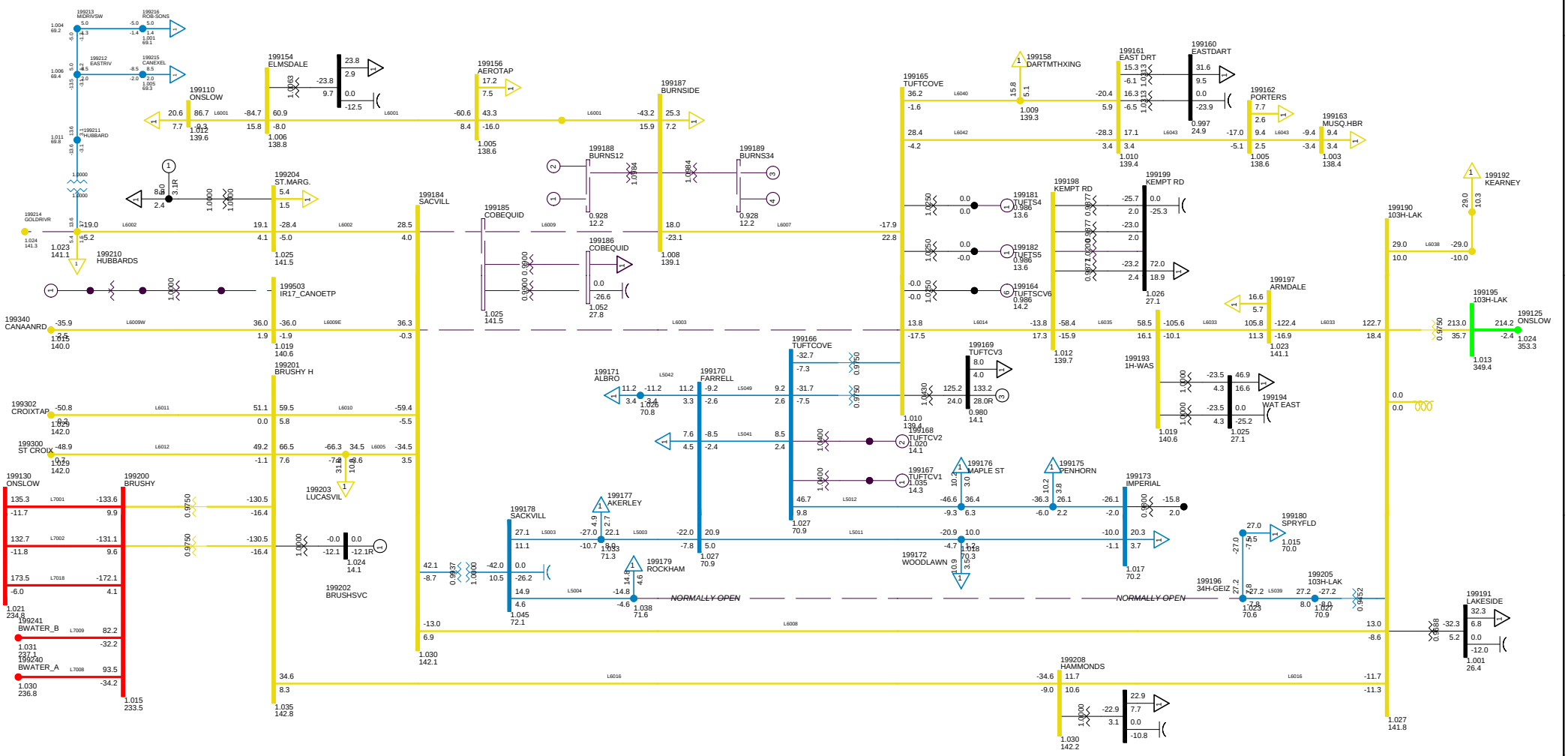

2013 SUMMER PEAK NS EXPORT 200
C38 DCT L6003 L6009
METRO ZONE TUE, DEC 09 2008 22:57

Bus - VOLTAGE (KV/PU)
Branch - MW/MVAR
Equipment - MW/MVAR
100.0%RATEA
1.050OV 0.950UV
KV: <=30.000 <=69.000 <=138.000 <=230.000 <=345.000 >345.000

Figure __

Total Wind Gen: 290.1 MW
Gross Tupper 165.0 MW
Gross Wreck Cove 200.0 MW
Gross Lingan 625.0 MW
Gross Trenton 310.0 MW
Gross Gas Turbine 0.0 MW
Gross Pt Aconi 185.0 MW
Gross Tuft's Cove 133.2 MW
Gross Small Hydro 42.9 MW
Net Stora Load 178.9 MW
Total BMPC Load 108.5 MW

NSX 200.0 MW
CBX 780.0 MW
ONI 1036.7 MW
ONS 791.7 MW

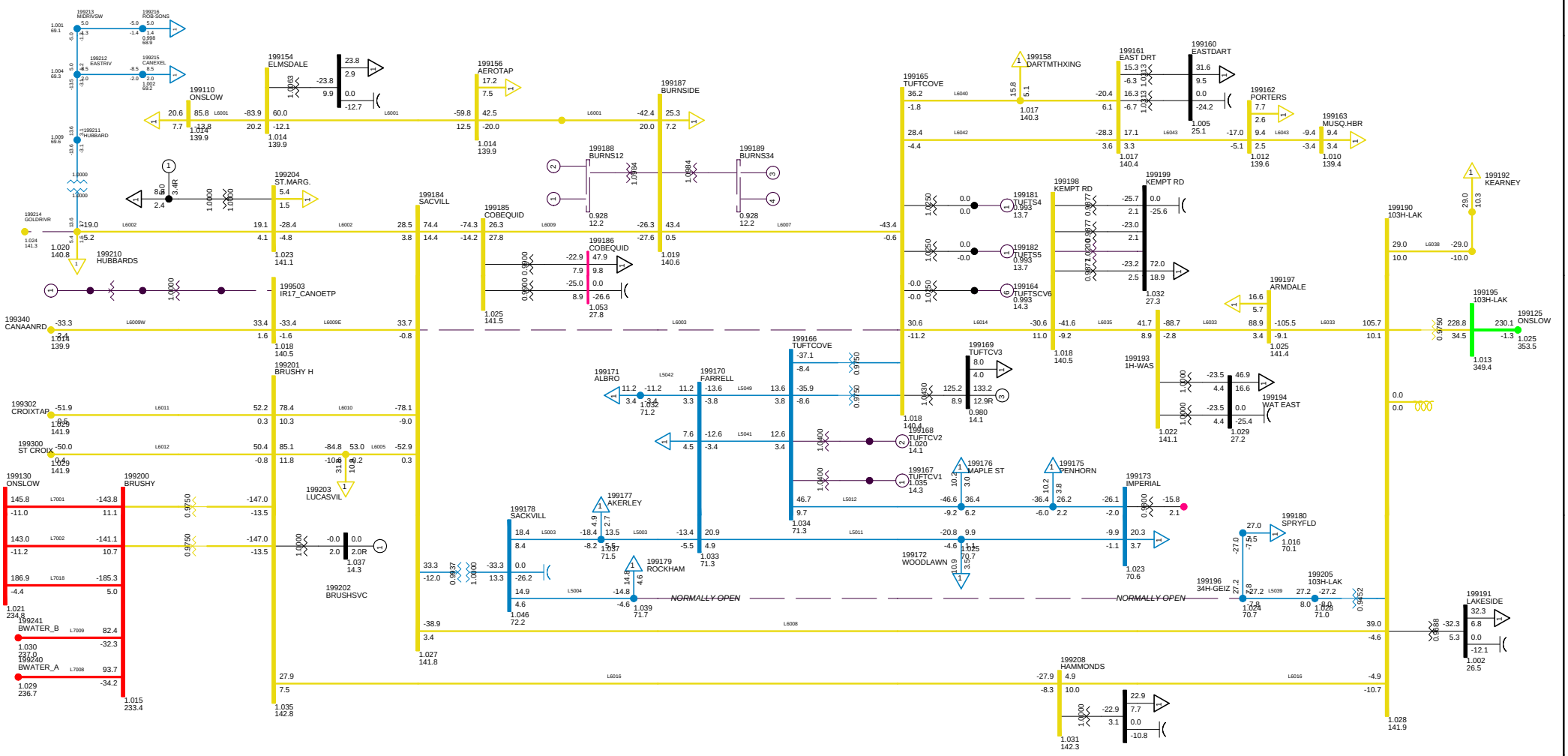

2013 SUMMER PEAK NS EXPORT 200
C39 DCT L6003 L6007
METRO ZONE TUE, DEC 09 2008 22:57

Bus - VOLTAGE (KV/PU)
Branch - MW/MVAR
Equipment - MW/MVAR
100.0%RATEA
1.050OV 0.950UV
KV: <=30.000 <=69.000 <=138.000 <=230.000 <=345.000 >345.000

Figure __

Total Wind Gen: 259.5 MW | Gross Tupper 165.0 MW | Gross Wreck Cove 200.0 MW

Gross Lingan 625.0 MW | Gross Trenton 310.0 MW | Gross Gas Turbine 0.0 MW

Gross Pt Aconi 185.0 MW | Gross Tuft's Cove 133.2 MW | Gross Small Hydro 23.9 MW

Net Stora Load 178.9 MW | Total BMPC Load 0.0 MW

NSX 382.9 MW

CBX 780.1 MW

ONI 1037.0 MW

ONS 607.7 MW

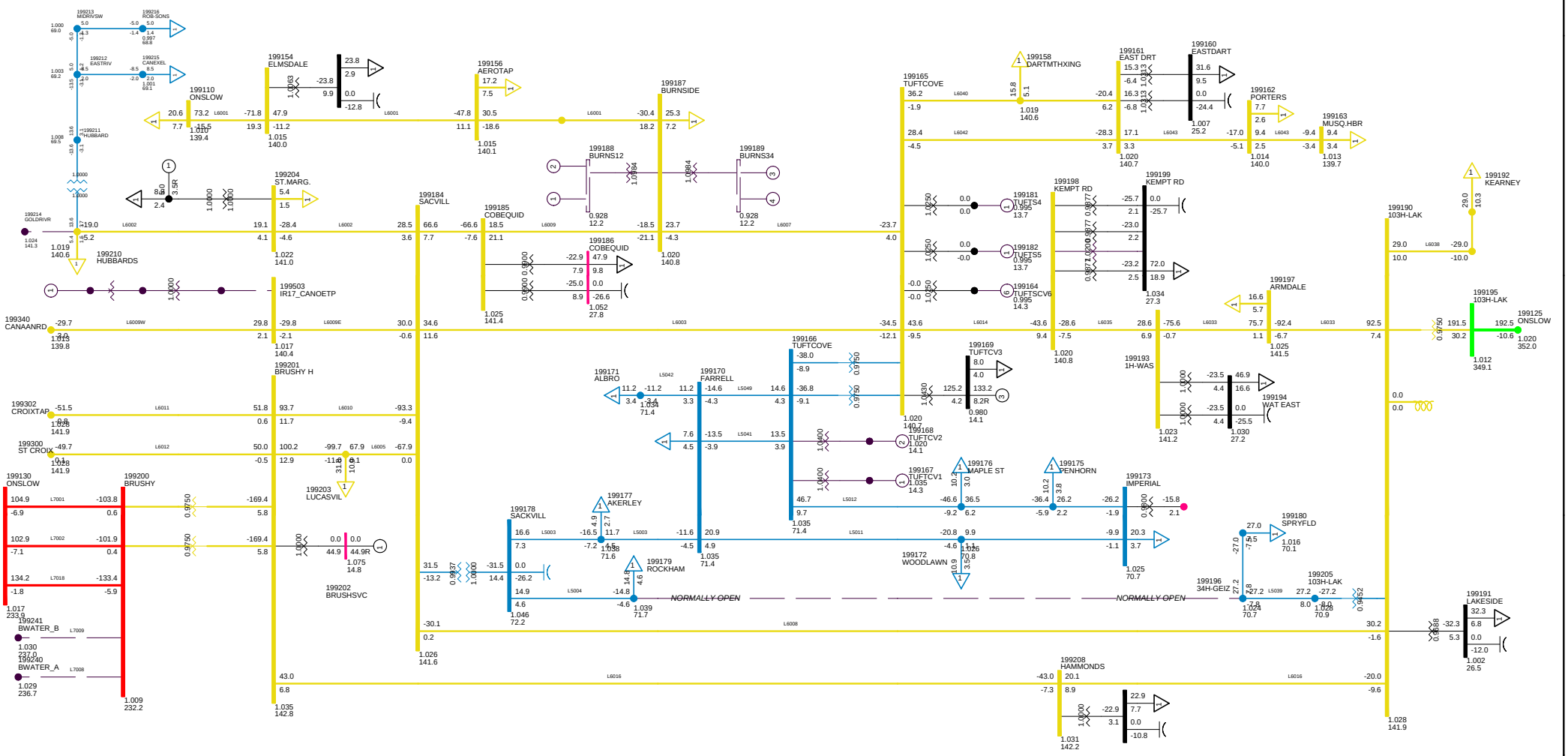

2013 SUMMER PEAK NS EXPORT 200
C40 DCT L7008 L7009 ISOLATES WEST
METRO ZONE TUE, DEC 09 2008 22:57

Bus - VOLTAGE (KV/PU)
Branch - MW/MVAR
Equipment - MW/MVAR
100.0%RATEA
1.050OV 0.950UV
KV: <=30.000 <=69.000 <=138.000 <=230.000 <=345.000 >345.000

Figure __

Total Wind Gen: 290.1 MW | Gross Tupper 165.0 MW | Gross Wreck Cove 200.0 MW

Gross Lingan 625.0 MW | Gross Trenton 310.0 MW | Gross Gas Turbine 0.0 MW

Gross Pt Aconi 185.0 MW | Gross Tuft's Cove 133.2 MW | Gross Small Hydro 42.9 MW

Net Stora Load 178.9 MW | Total BMPC Load 108.5 MW

NSX 255.7 MW

CBX 780.0 MW

ONI 1036.8 MW

ONS 735.8 MW

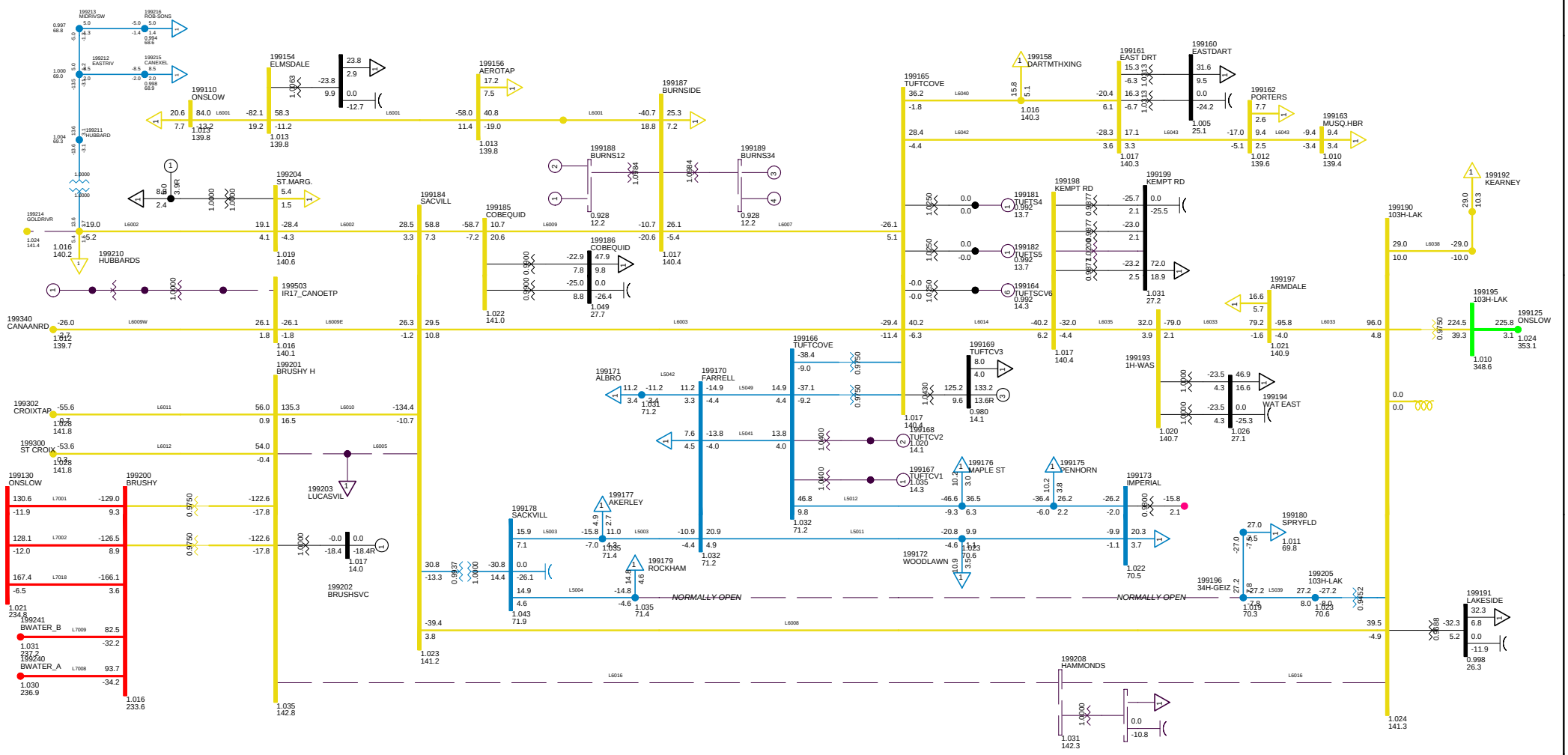

2013 SUMMER PEAK NS EXPORT 200
C41 1P FAULT ON L6016, BBU 622
METRO ZONE TUE, DEC 09 2008 22:57

Bus - VOLTAGE (KV/PU)
Branch - MW/MVAR
Equipment - MW/MVAR
100.0%RATEA
1.050OV 0.950UV
KV: <=30.000 <=69.000 <=138.000 <=230.000 <=345.000 >345.000

Figure __

Total Wind Gen: 290.1 MW | Gross Tupper 165.0 MW | Gross Wreck Cove 200.0 MW

Gross Lingan 625.0 MW | Gross Trenton 310.0 MW | Gross Gas Turbine 0.0 MW

Gross Pt Aconi 185.0 MW | Gross Tuft's Cove 133.2 MW | Gross Small Hydro 42.9 MW

Net Stora Load 178.9 MW | Total BMPC Load 108.5 MW

NSX 236.5 MW

CBX 779.7 MW

ONI 1036.1 MW

ONS 754.5 MW

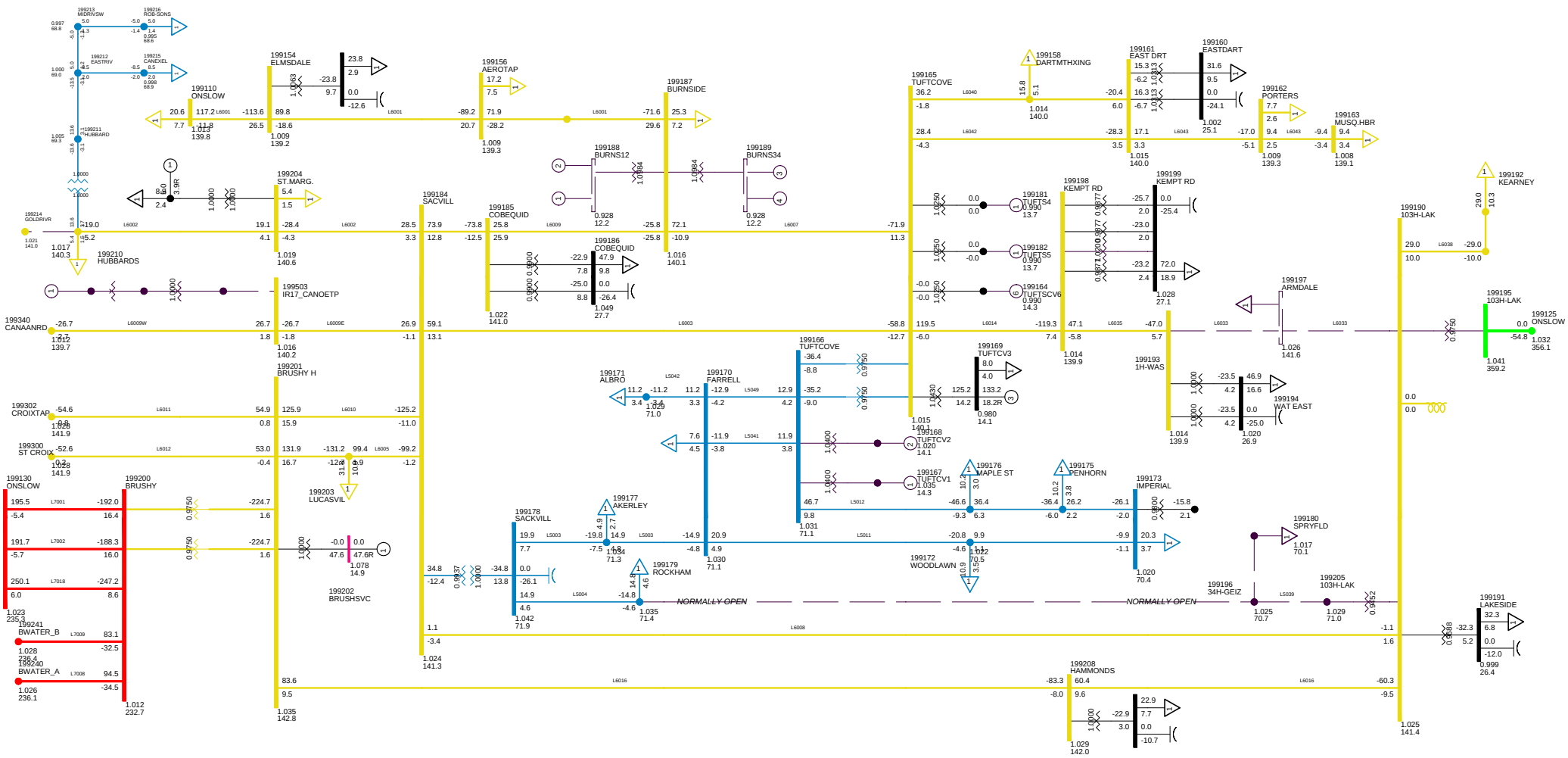

2013 SUMMER PEAK NS EXPORT 200
C42 1P L6033, BBU 103H-632
METRO ZONE TUE, DEC 09 2008 22:57

Bus - VOLTAGE (KV/PU)
Branch - MW/MVAR
Equipment - MW/MVAR
100.0%RATEA
1.050OV 0.950UV
KV: <=30.000 <=69.000 <=138.000 <=230.000 <=345.000 >345.000

Figure __

Total Wind Gen: 290.1 MW
Gross Tupper 165.0 MW
Gross Wreck Cove 200.0 MW
Gross Lingan 625.0 MW
Gross Trenton 310.0 MW
Gross Gas Turbine 0.0 MW
Gross Pt Aconi 185.0 MW
Gross Tuft's Cove 133.2 MW
Gross Small Hydro 42.9 MW
Net Stora Load 178.9 MW
Total BMPC Load 108.5 MW

NSX 230.7 MW
CBX 780.0 MW
ONI 1036.8 MW
ONS 760.9 MW

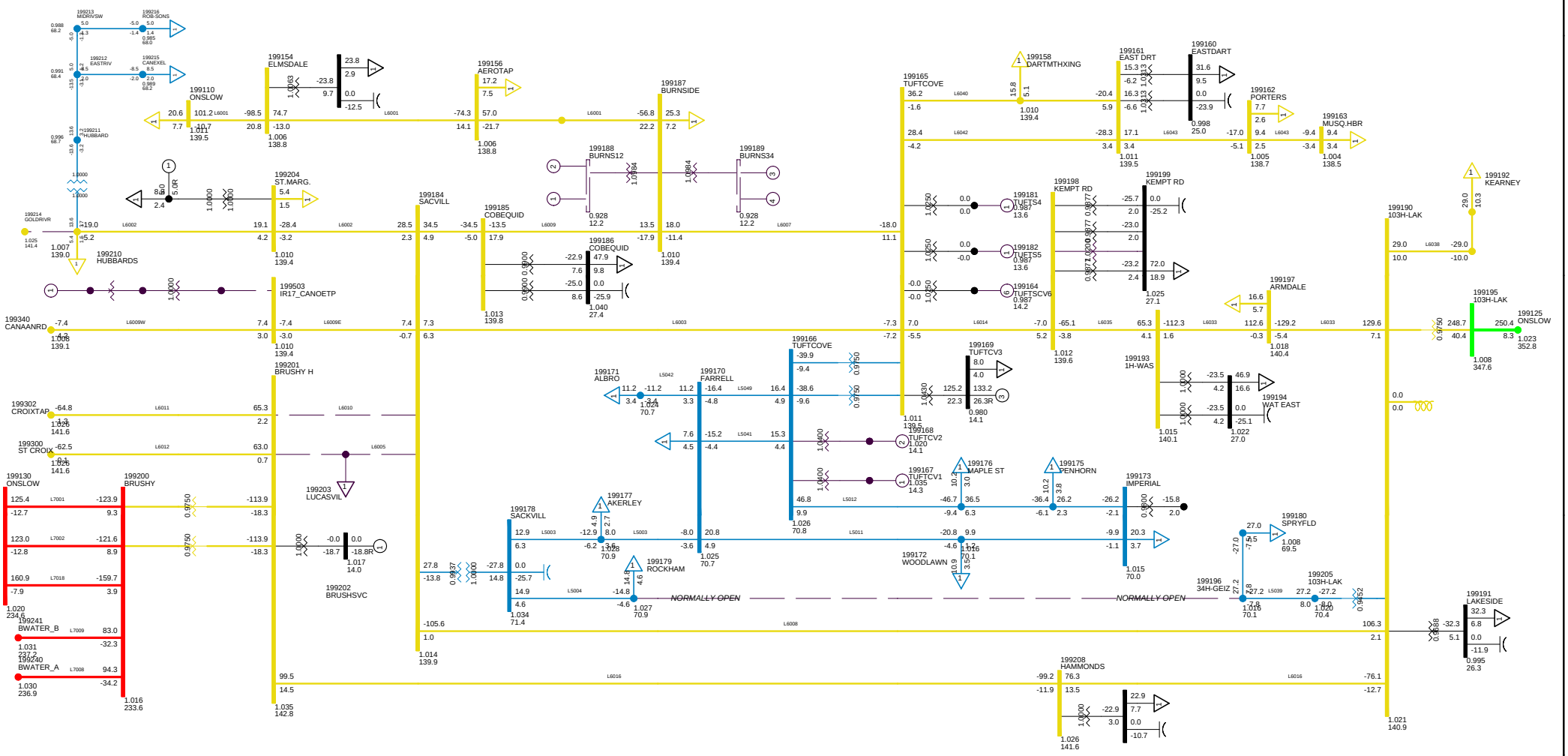

2013 SUMMER PEAK NS EXPORT 200
C43 BBU L6005 L6010 90H-608
METRO ZONE TUE, DEC 09 2008 22:57

Bus - VOLTAGE (KV/PU)
Branch - MW/MVAR
Equipment - MW/MVAR
100.0%RATEA
1.050OV 0.950UV
KV: <=30.000 <=69.000 <=138.000 <=230.000 <=345.000 >345.000

Figure __

Total Wind Gen: 290.1 MW | Gross Tupper 165.0 MW | Gross Wreck Cove 200.0 MW

Gross Lingan 625.0 MW | Gross Trenton 310.0 MW | Gross Gas Turbine 0.0 MW

Gross Pt Aconi 185.0 MW | Gross Tuft's Cove 133.2 MW | Gross Small Hydro 42.9 MW

Net Stora Load 178.9 MW | Total BMPC Load 108.5 MW

NSX 249.2 MW

CBX 780.0 MW

ONI 1036.8 MW

ONS 742.3 MW

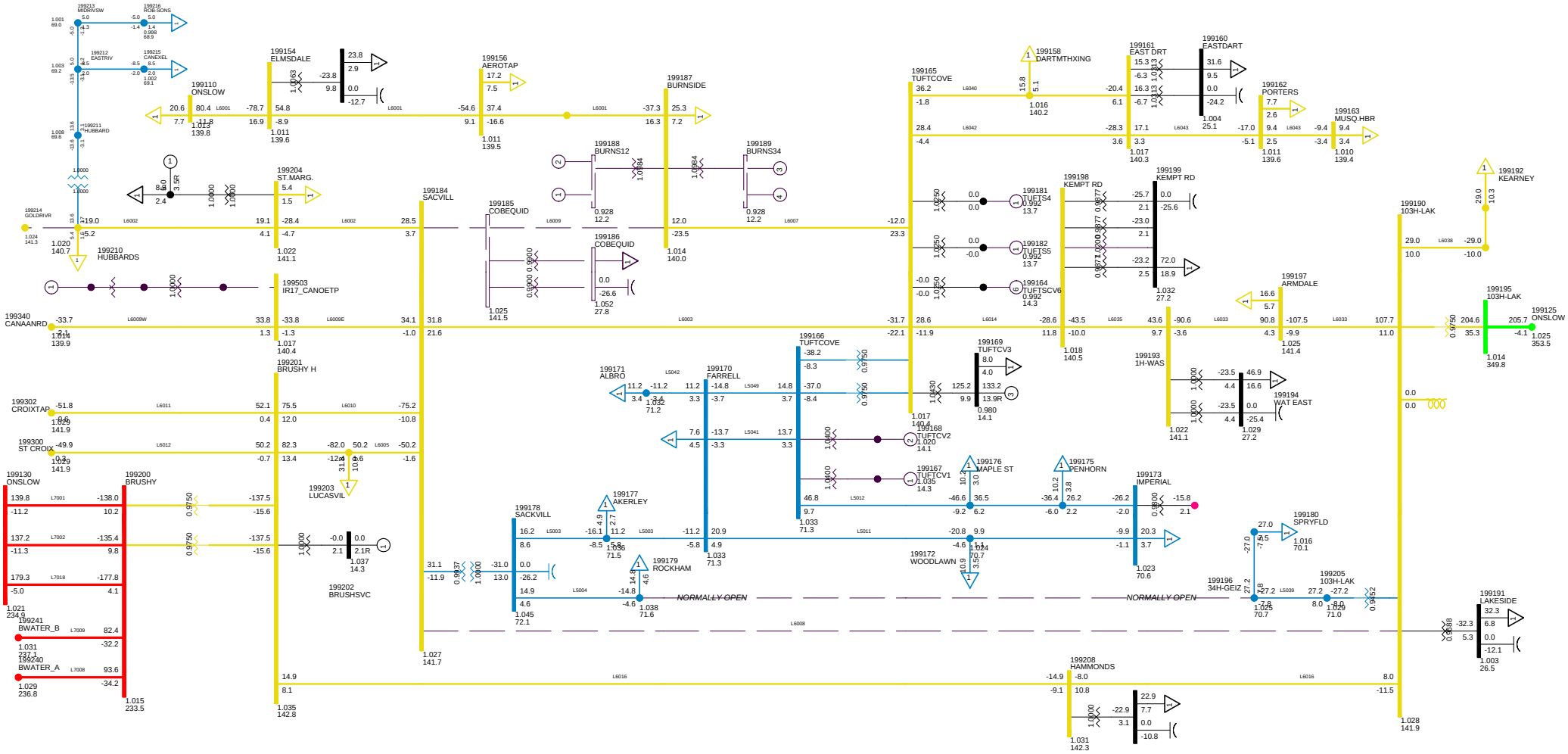

2013 SUMMER PEAK NS EXPORT 200
C44 BBU L6008 L6009 90H-611
METRO ZONE TUE, DEC 09 2008 22:58

Bus - VOLTAGE (KV/PU)
Branch - MW/MVAR
Equipment - MW/MVAR
100.0%RATEA
1.050OV 0.950UV
KV: <=30.000 <=69.000 <=138.000 <=230.000 <=345.000 >345.000

Figure __

Total Wind Gen: 290.1 MW
Gross Tupper 165.0 MW
Gross Wreck Cove 200.0 MW
Gross Lingan 625.0 MW
Gross Trenton 310.0 MW
Gross Gas Turbine 0.0 MW
Gross Pt Aconi 185.0 MW
Gross Tuft's Cove 133.2 MW
Gross Small Hydro 42.9 MW
Net Stora Load 178.9 MW
Total BMPC Load 108.5 MW

NSX 285.4 MW
CBX 780.0 MW
ONI 1036.9 MW
ONS 705.9 MW

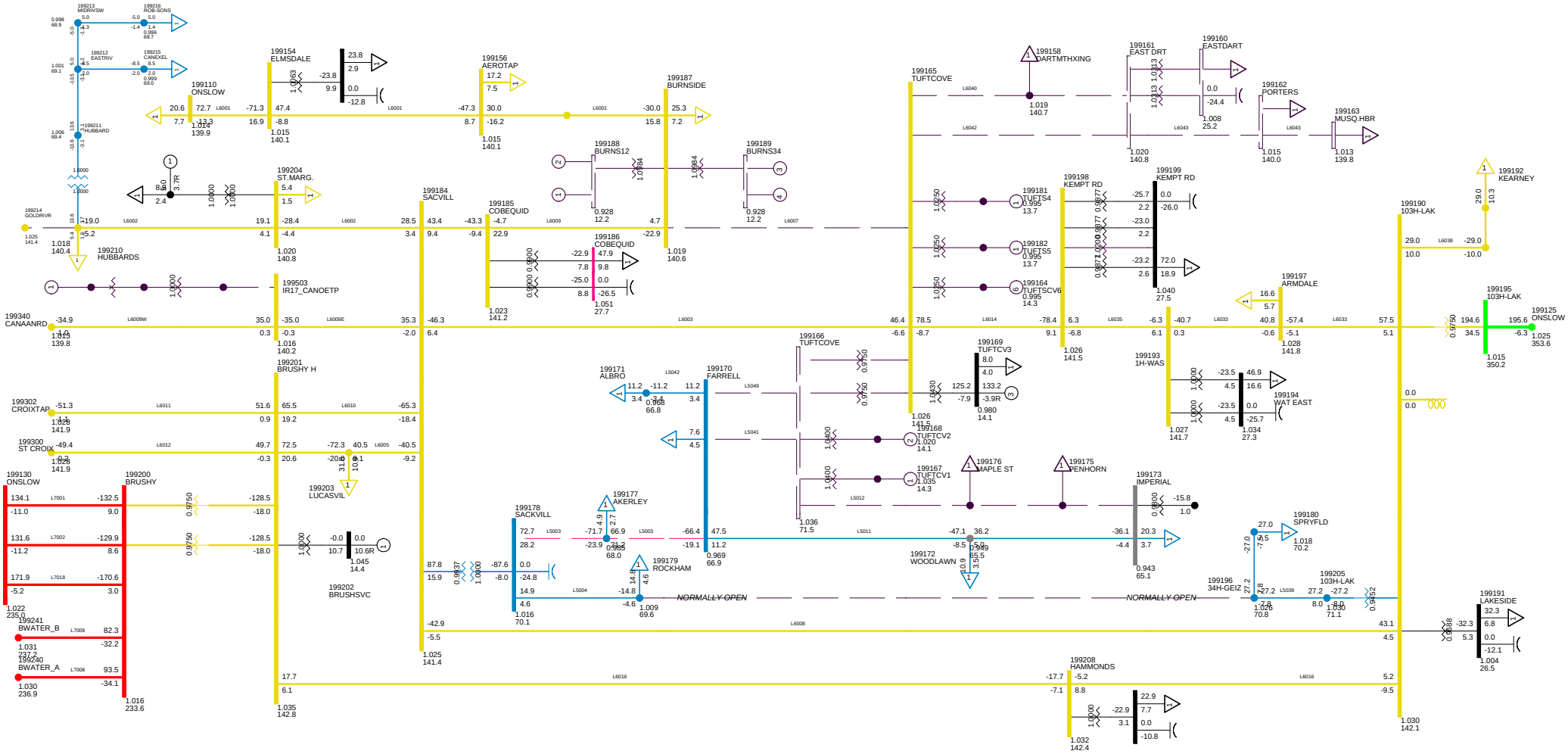

2013 SUMMER PEAK NS EXPORT 200
C45 BBU ON 91H-523
METRO ZONE TUE, DEC 09 2008 22:58

Bus - VOLTAGE (KV/PU)
Branch - MW/MVAR
Equipment - MW/MVAR
100.0%RATEA
1.050OV 0.950UV
KV: <=30.000 <=69.000 <=138.000 <=230.000 <=345.000 >345.000

Figure __

Total Wind Gen: 290.1 MW | Gross Tupper 165.0 MW | Gross Wreck Cove 200.0 MW

Gross Lingan 625.0 MW | Gross Trenton 310.0 MW | Gross Gas Turbine 0.0 MW

Gross Pt Aconi 185.0 MW | Gross Tuft's Cove 133.2 MW | Gross Small Hydro 42.9 MW

Net Stora Load 178.9 MW | Total BMPC Load 108.5 MW

NSX 275.6 MW

CBX 780.0 MW

ONI 1036.9 MW

ONS 715.7 MW

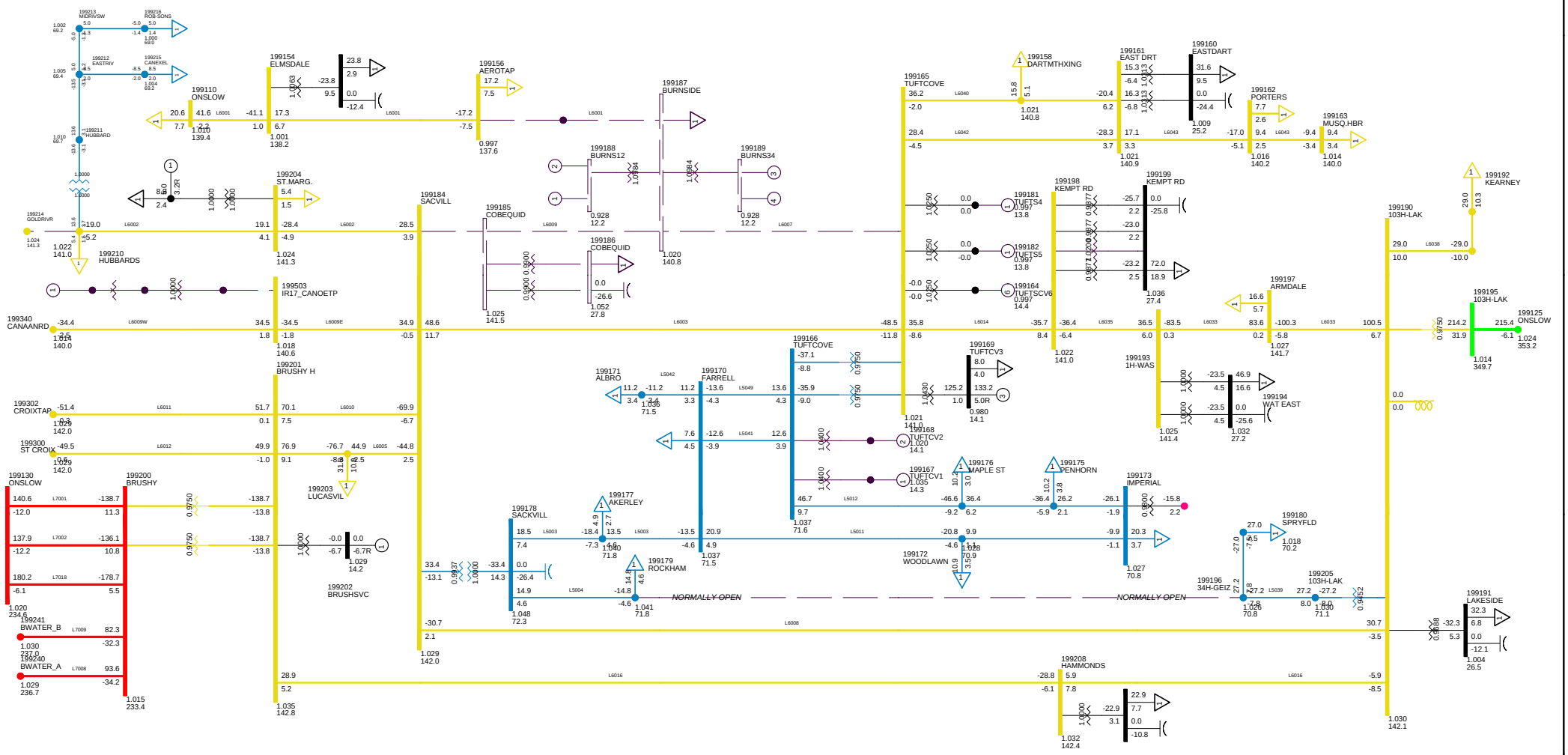

2013 SUMMER PEAK NS EXPORT 200
C46 1P L6009 BBU ON 108H 607
METRO ZONE TUE, DEC 09 2008 22:58

Bus - VOLTAGE (KV/PU)
Branch - MW/MVAR
Equipment - MW/MVAR
100.0%RATEA
1.050OV 0.950UV
KV: <=30.000 <=69.000 <=138.000 <=230.000 <=345.000 >345.000

Figure __

Total Wind Gen: 290.1 MW
Gross Tupper 165.0 MW
Gross Wreck Cove 200.0 MW
Gross Lingan 625.0 MW
Gross Trenton 310.0 MW
Gross Gas Turbine 0.0 MW
Gross Pt Aconi 185.0 MW
Gross Tuft's Cove 133.2 MW
Gross Small Hydro 42.9 MW
Net Stora Load 178.9 MW
Total BMPC Load 108.5 MW

NSX 282.8 MW
CBX 779.8 MW
ONI 1036.2 MW
ONS 708.2 MW

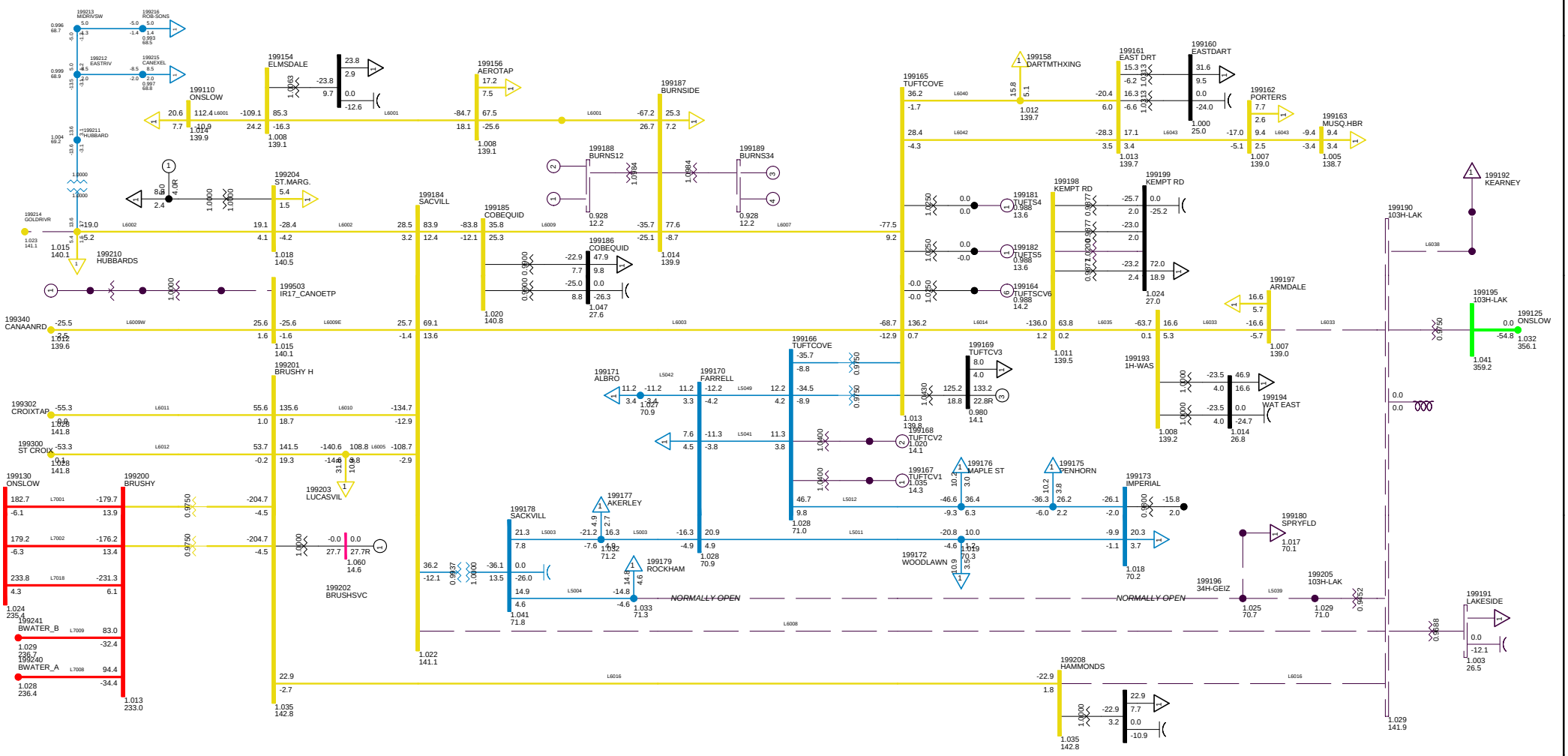

2013 SUMMER PEAK NS EXPORT 200
C47 1P 103H-600
METRO ZONE TUE, DEC 09 2008 22:58

Bus - VOLTAGE (KV/PU)
Branch - MW/MVAR
Equipment - MW/MVAR
100.0%RATEA
1.050OV 0.950UV
KV: <=30.000 <=69.000 <=138.000 <=230.000 <=345.000 >345.000

Figure __

Total Wind Gen: 290.1 MW | Gross Tupper 165.0 MW | Gross Wreck Cove 200.0 MW

Gross Lingan 625.0 MW | Gross Trenton 310.0 MW | Gross Gas Turbine 0.0 MW

Gross Pt Aconi 185.0 MW | Gross Tuft's Cove 133.2 MW | Gross Small Hydro 42.9 MW

Net Stora Load 178.9 MW | Total BMPC Load 108.5 MW

NSX 200.0 MW

CBX 780.0 MW

ONI 1036.7 MW

ONS 791.8 MW

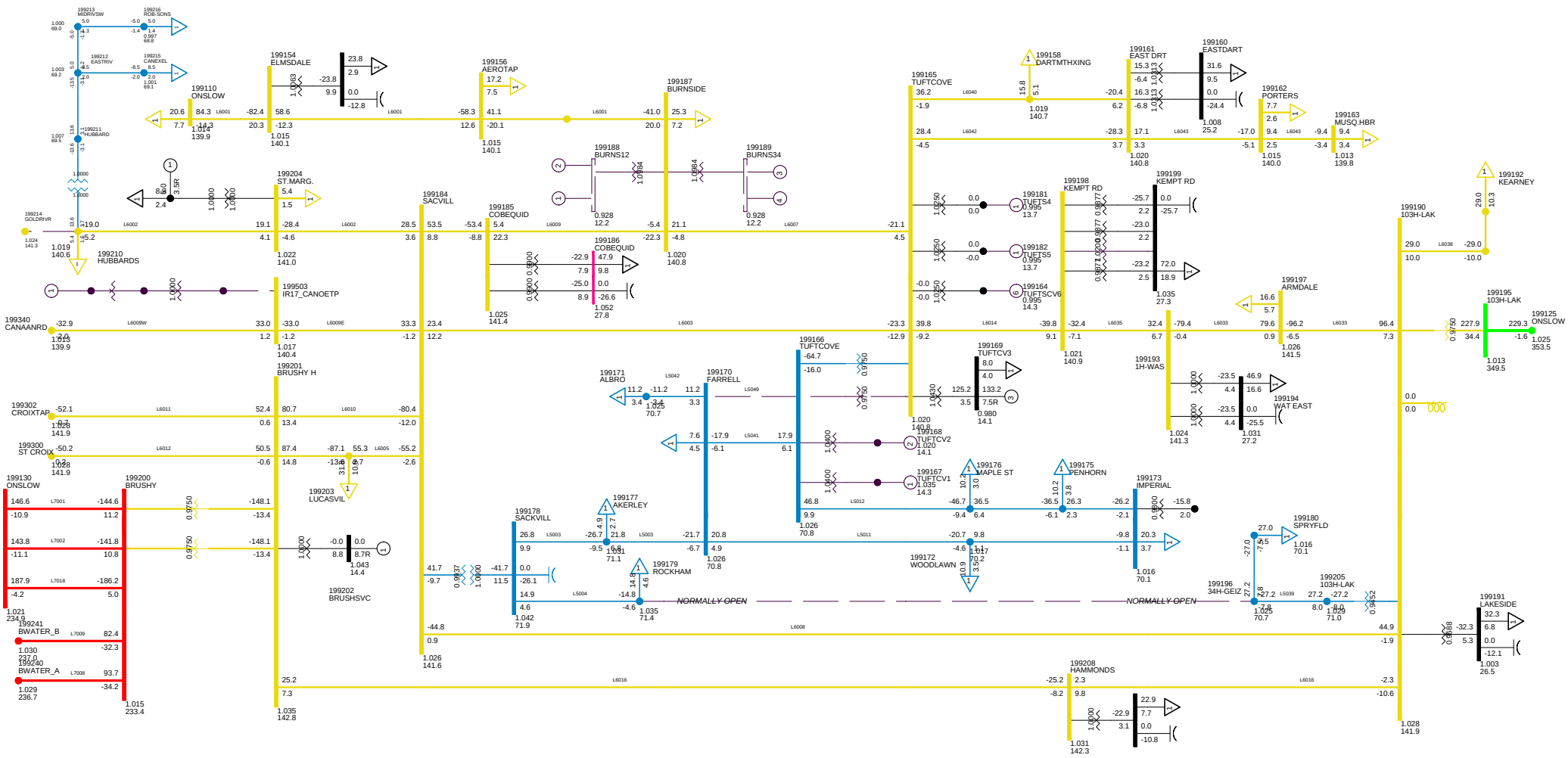

2013 SUMMER PEAK NS EXPORT 200
C48 1P ON BREAKER 91H-523
METRO ZONE TUE, DEC 09 2008 22:58

Bus - VOLTAGE (KV/PU)
Branch - MW/MVAR
Equipment - MW/MVAR
100.0%RATEA
1.050OV 0.950UV
KV: <=30.000 <=69.000 <=138.000 <=230.000 <=345.000 >345.000

Figure __

Total Wind Gen: 290.1 MW
Gross Tupper 165.0 MW
Gross Wreck Cove 200.0 MW
Gross Lingan 625.0 MW
Gross Trenton 310.0 MW
Gross Gas Turbine 0.0 MW
Gross Pt Aconi 185.0 MW
Gross Tuft's Cove 133.2 MW
Gross Small Hydro 42.9 MW
Net Stora Load 178.9 MW
Total BMPC Load 108.5 MW

NSX 274.4 MW
CBX 780.0 MW
ONI 1036.9 MW
ONS 717.0 MW

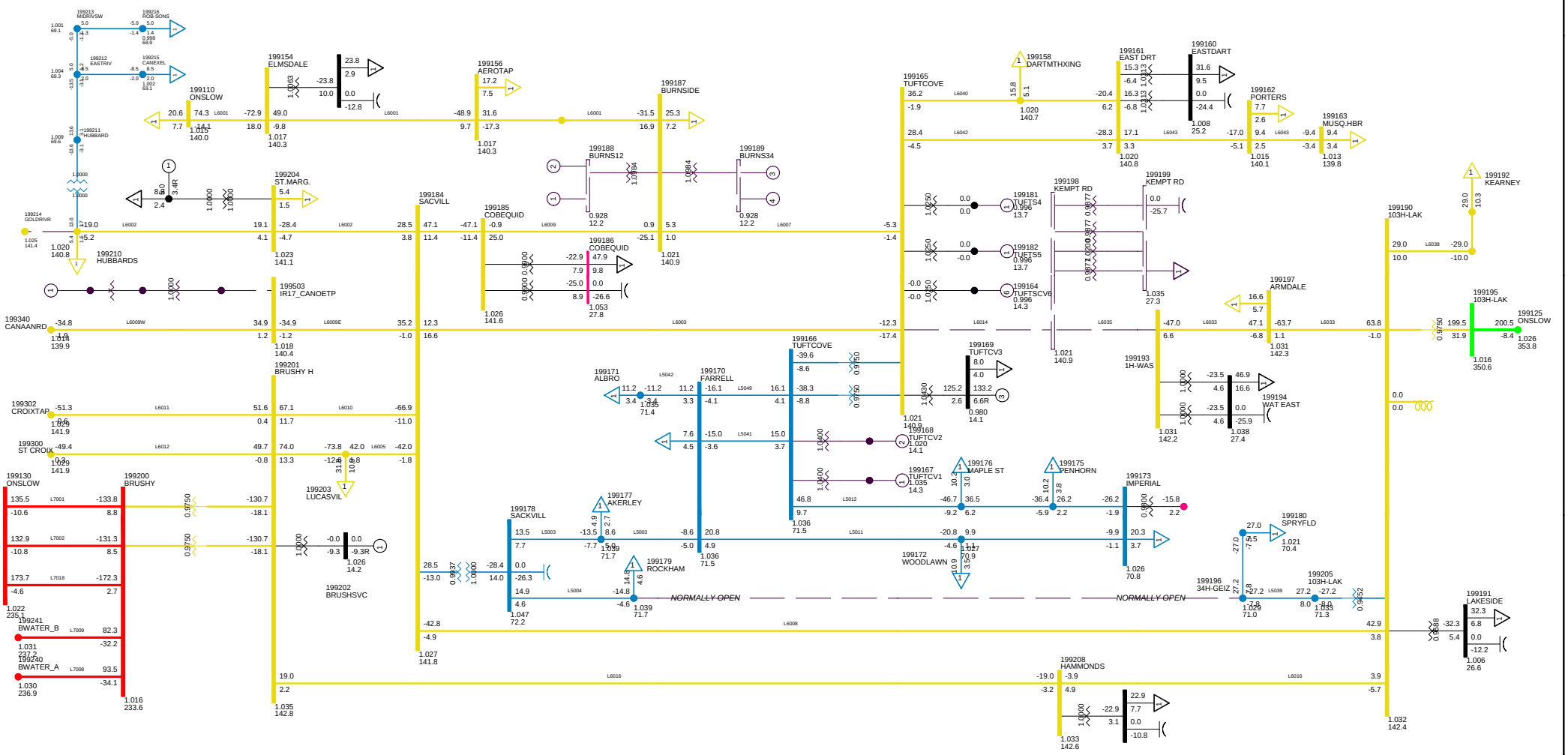

2013 SUMMER PEAK NS EXPORT 200
C49 1-PH ON 104H-600
METRO ZONE TUE, DEC 09 2008 22:58

Bus - VOLTAGE (KV/PU)
Branch - MW/MVAR
Equipment - MW/MVAR
100.0%RATEA
1.050OV 0.950UV
KV: <=30.000 <=69.000 <=138.000 <=230.000 <=345.000 >345.000

Figure __

NSX 200.1 MW

CBX 780.0 MW

ONI 1036.7 MW

ONS 791.6 MW

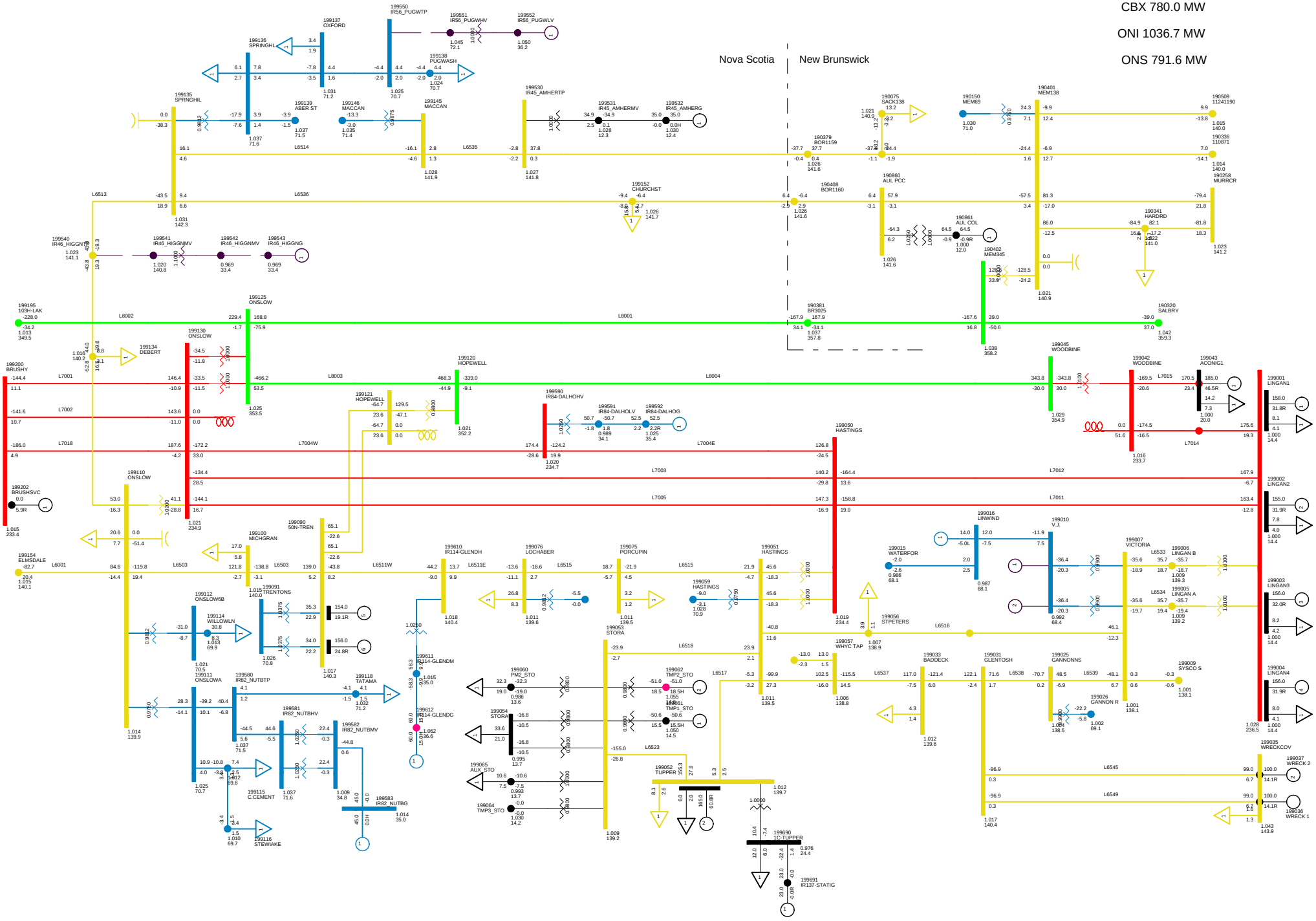

2010 SUMMER PEAK, NSLOAD=1700
NS-NB=+250; NB-NE=1000; CBX=780; ONI=1036 ONS=791
NORTHEASTERN NS TUE, DEC 09 2008 22:58

Total Wind Gen: 290.1 MW
Gross Lingan 625.0 MW
Gross Pt Aconi 185.0 MW
Gross Tupper 165.0 MW
Gross Trenton 310.0 MW
Gross Tuft's Cove 133.2 MW
Gross Wreck Cove 200.0 MW
Gross Gas Turbine 0.0 MW
Gross Small Hydro 42.9 MW
Net Stora Load 178.9 MW
Total BMPC Load 108.5 MW

Bus - VOLTAGE (KV/PU)
Branch - MW/MVAR
Equipment - MW/MVAR
110.0%RATEA
1.050OV 0.950UV
KV: <=25.000 <=69.000 <=138.000 <=230.000 <=345.000 >345.000

Figure ___

NSX 20.4 MW

CBX 620.3 MW

ONI 859.6 MW

ONS 794.0 MW

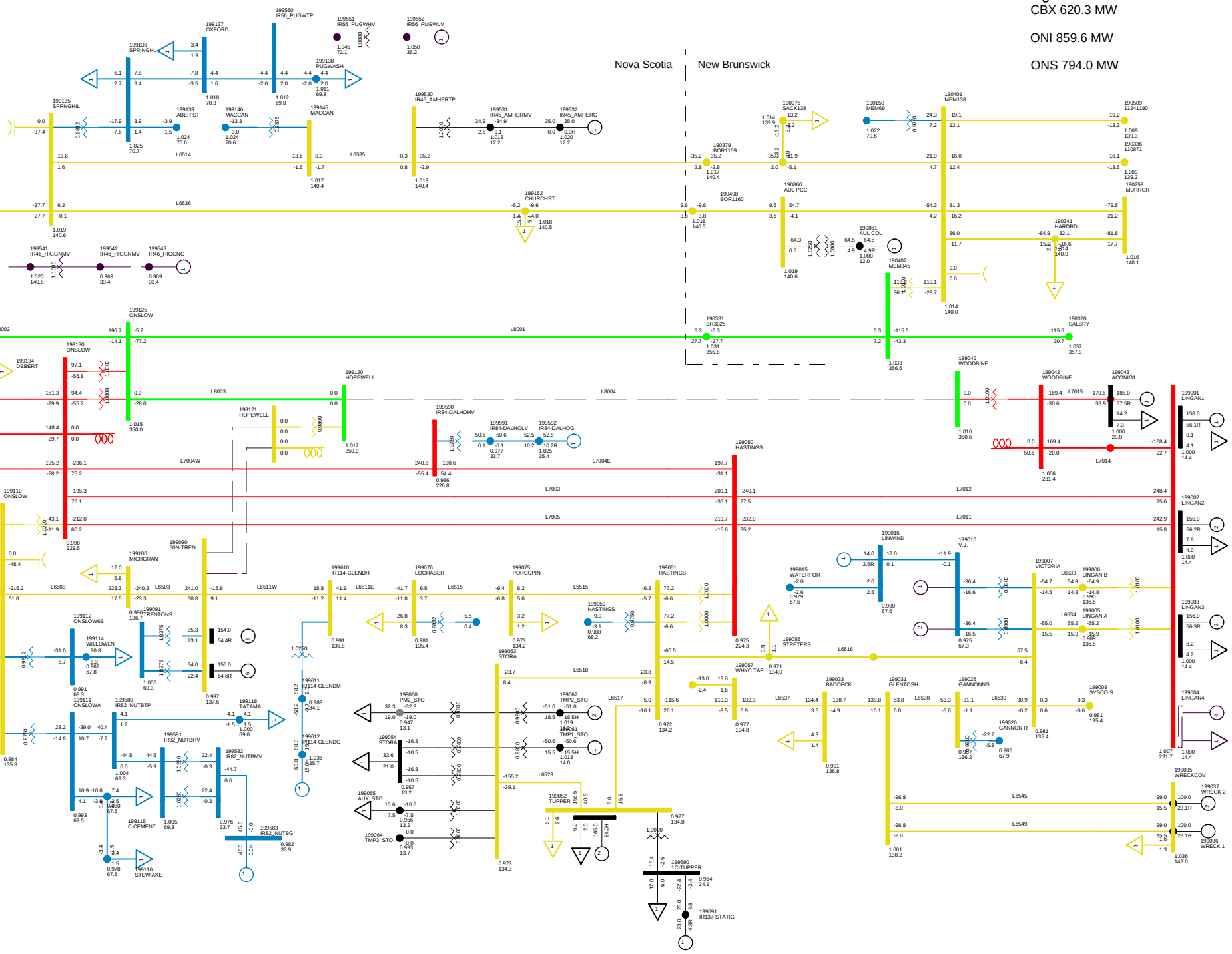

2013 SUMMER PEAK NS EXPORT 200
C50 1P FAULT ON L6507, BBU 79N-606
NORTHEASTERN NS TUE, DEC 09 2008 22:59

Total Wind Gen: 290.1 MW | Gross Tupper 165.0 MW | Gross Wreck Cove 200.0 MW | Net Stora Load 179.0 MW
Gross Lingan 469.0 MW | Gross Trenton 310.0 MW | Gross Gas Turbine 0.0 MW | Total BMPC Load 108.6 MW
Gross Pt Aconi 185.0 MW | Gross Tuft's Cove 133.2 MW | Gross Small Hydro 42.9 MW

Bus - VOLTAGE (KV/PU)
Branch - MW/MVAR
Equipment - MW/MVAR
110.0%RATEA
1.0500V 0.950UV
KV: <=25.000 <=69.000 <=138.000 <=230.000 <=345.000 >345.000

Figure ___

NSX 220.7 MW

CBX 779.6 MW

ONI 1034.5 MW

ONS 792.8 MW

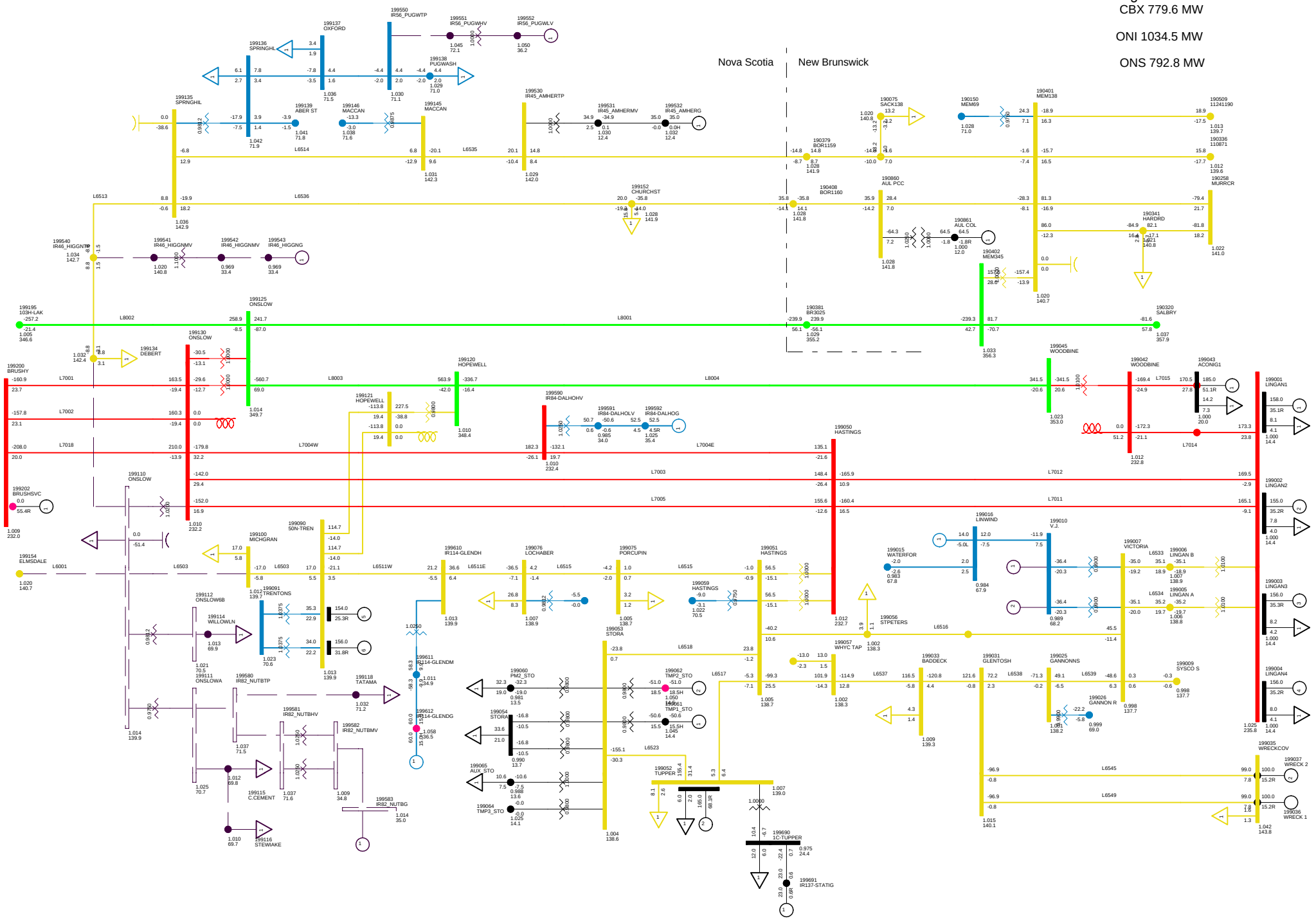

2013 SUMMER PEAK NS EXPORT 200
C51 1P FAULT ON 1N BUS 61
NORTHEASTERN NS TUE, DEC 09 2008 22:59

Total Wind Gen: 245.1 MW | Gross Tupper 165.0 MW | Gross Wreck Cove 200.0 MW | Net Stora Load 178.9 MW
Gross Lingan 625.0 MW | Gross Trenton 310.0 MW | Gross Gas Turbine 0.0 MW | Total BMPC Load 108.6 MW
Gross Pt Aconi 185.0 MW | Gross Tuft's Cove 133.2 MW | Gross Small Hydro 42.9 MW

Bus - VOLTAGE (KV/PU)
Branch - MW/MVAR
Equipment - MW/MVAR
110.0%RATEA
1.050OV 0.950UV
KV: <=25.000 <=69.000 <=138.000 <=230.000 <=345.000 >345.000

Figure ___

NSX 248.1 MW
CBX 831.5 MW
ONI 1085.1 MW
ONS 791.7 MW

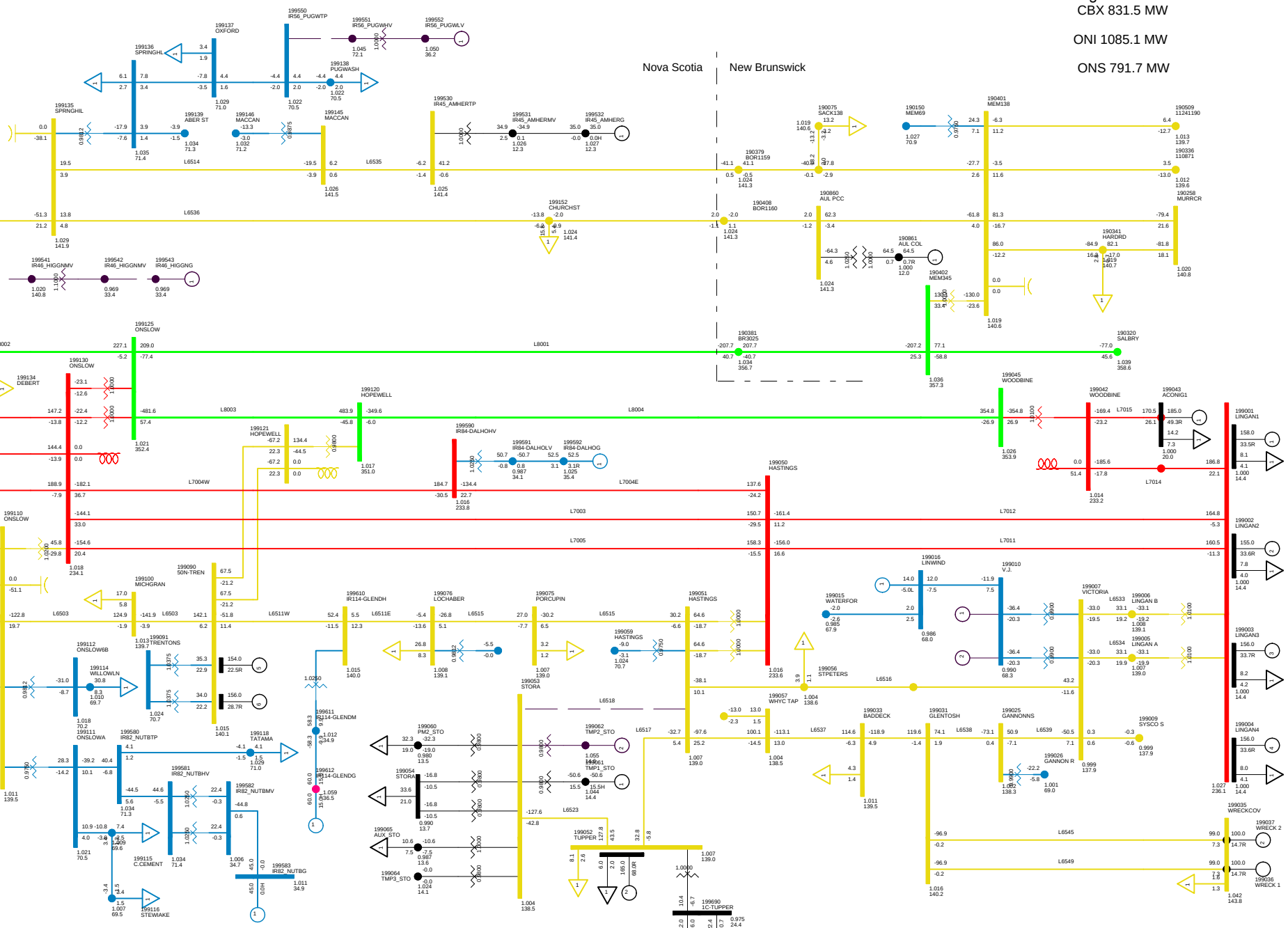

2013 SUMMER PEAK NS EXPORT 200
C52 BBU 47C-601
NORTHEASTERN NS TUE, DEC 09 2008 22:59

Total Wind Gen: 290.1 MW | Gross Tupper 165.0 MW | Gross Wreck Cove 200.0 MW | Net Stora Load 127.6 MW
Gross Lingan 625.0 MW | Gross Trenton 310.0 MW | Gross Gas Turbine 0.0 MW | Total BMPC Load 108.5 MW
Gross Pt Aconi 185.0 MW | Gross Tuft's Cove 133.2 MW | Gross Small Hydro 42.9 MW

Bus - VOLTAGE (KV/PU)
Branch - MW/MVAR
Equipment - MW/MVAR
110.0%RATEA
1.0500V 0.950UV
KV: <=25.000 <=69.000 <=138.000 <=230.000 <=345.000 >345.000

Figure ___

NSX 247.8 MW
CBX 831.2 MW
ONI 1084.8 MW
ONS 791.7 MW

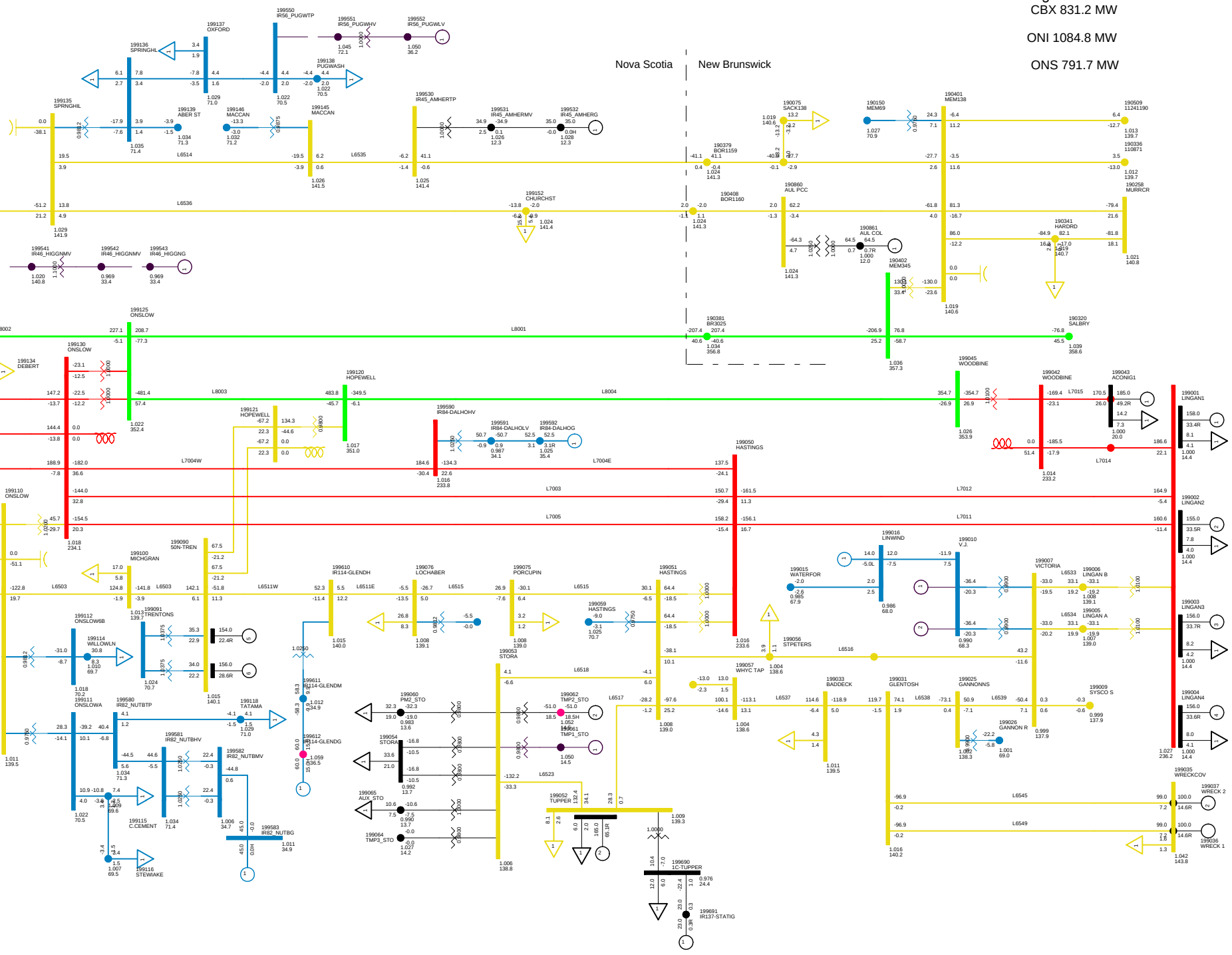

2013 SUMMER PEAK NS EXPORT 200
C53 BREAKR 47C-602 FAULT
NORTHEASTERN NS TUE, DEC 09 2008 22:59

Total Wind Gen: 290.1 MW | Gross Tupper 165.0 MW | Gross Wreck Cove 200.0 MW | Net Stora Load 128.1 MW
Gross Lingan 625.0 MW | Gross Trenton 310.0 MW | Gross Gas Turbine 0.0 MW | Total BMPC Load 108.5 MW
Gross Pt Aconi 185.0 MW | Gross Tuft's Cove 133.2 MW | Gross Small Hydro 42.9 MW

Bus - VOLTAGE (KV/PU)
Branch - MW/MVAR
Equipment - MW/MVAR
110.0%RATEA
1.050OV 0.950UV
KV: <=25.000 <=69.000 <=138.000 <=230.000 <=345.000 >345.000

Figure ___

NSX 200.1 MW

CBX 780.0 MW

ONI 1036.7 MW

ONS 791.6 MW

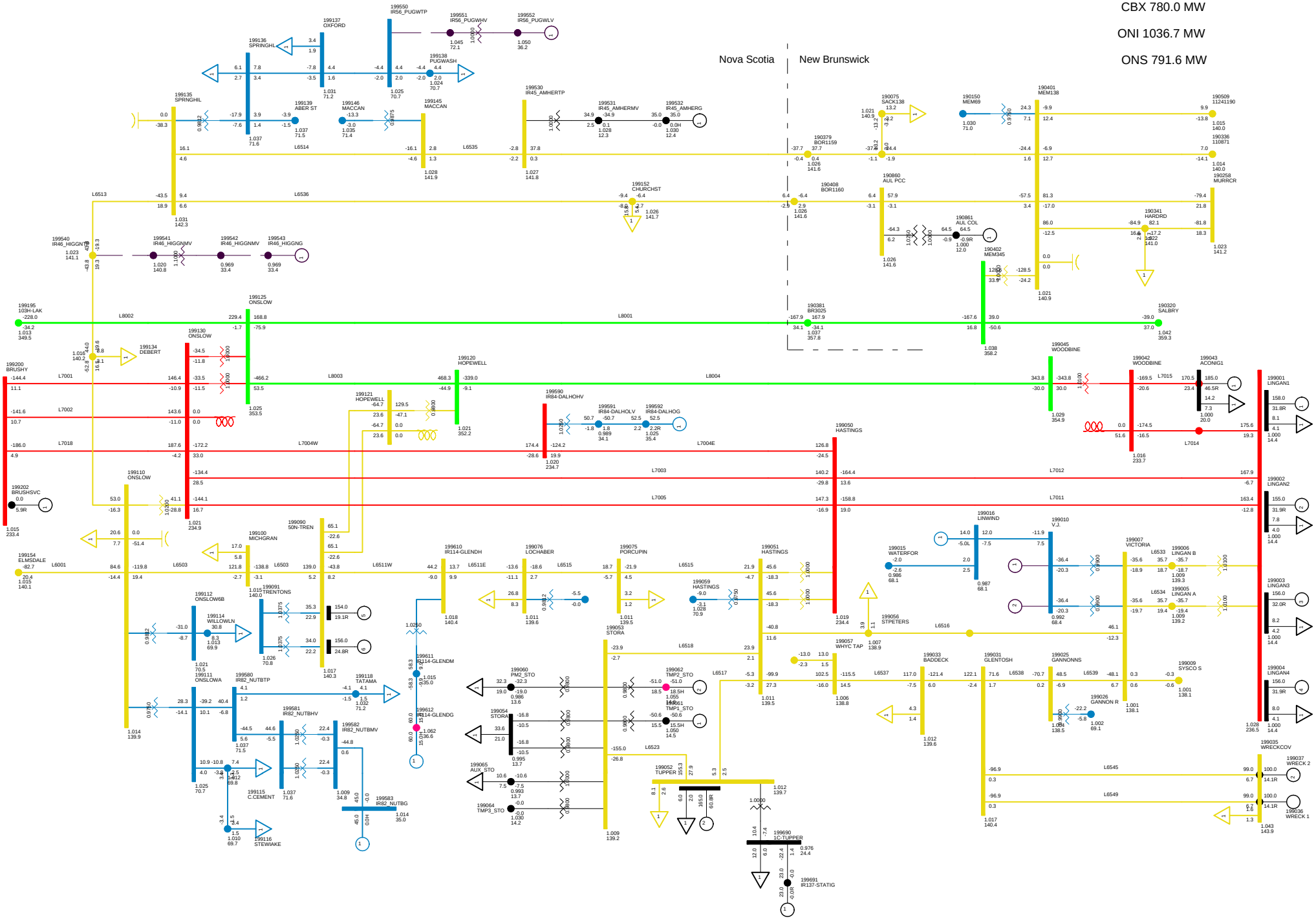

2010 SUMMER PEAK, NSLOAD=1700
NS-NB=+250; NB-NE=1000; CBX=780; ONI=1036 ONS=791
NORTHEASTERN NS TUE, DEC 09 2008 22:59

Total Wind Gen: 290.1 MW
Gross Lingan 625.0 MW
Gross Pt Aconi 185.0 MW
Gross Tupper 165.0 MW
Gross Trenton 310.0 MW
Gross Tuft's Cove 133.2 MW
Gross Wreck Cove 200.0 MW
Gross Gas Turbine 0.0 MW
Gross Small Hydro 42.9 MW
Net Stora Load 178.9 MW
Total BMPC Load 108.5 MW

Bus - VOLTAGE (KV/PU)
Branch - MW/MVAR
Equipment - MW/MVAR
110.0%RATEA
1.050OV 0.950UV
KV: <=25.000 <=69.000 <=138.000 <=230.000 <=345.000 >345.000

Figure ___

NSX 47.1 MW
CBX 623.1 MW
ONI 883.3 MW
ONS 791.6 MW

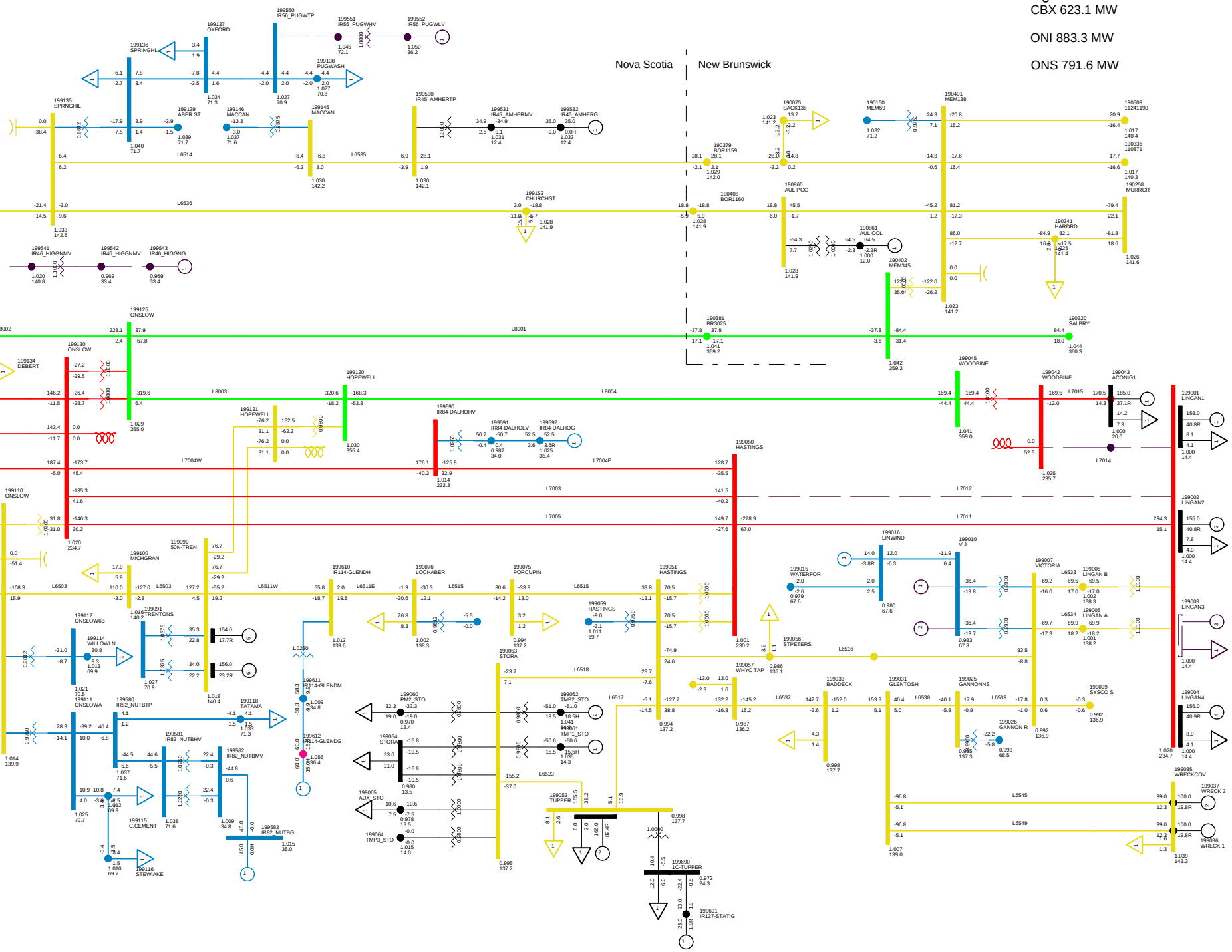

2013 SUMMER PEAK NS EXPORT 200
C54S BBU 88S-723 WITH SPS
NORTHEASTERN NS TUE, DEC 09 2008 22:59

Total Wind Gen: 290.1 MW
Gross Lingan 469.0 MW
Gross Pt Aconi 185.0 MW
Gross Tupper 165.0 MW
Gross Trenton 310.0 MW
Gross Tuft's Cove 133.2 MW
Gross Wreck Cove 200.0 MW
Gross Gas Turbine 0.0 MW
Gross Small Hydro 42.9 MW
Net Stora Load 178.9 MW
Total BMPC Load 108.5 MW

Bus - VOLTAGE (KV/PU)
Branch - MW/MVAR
Equipment - MW/MVAR
110.0%RATEA
1.0500V 0.9500V
KV: <=25.000 <=69.000 <=138.000 <=230.000 <=345.000 >345.000

Figure ___

NSX 188.2 MW
CBX 780.9 MW
ONI 1029.7 MW
ONS 796.5 MW

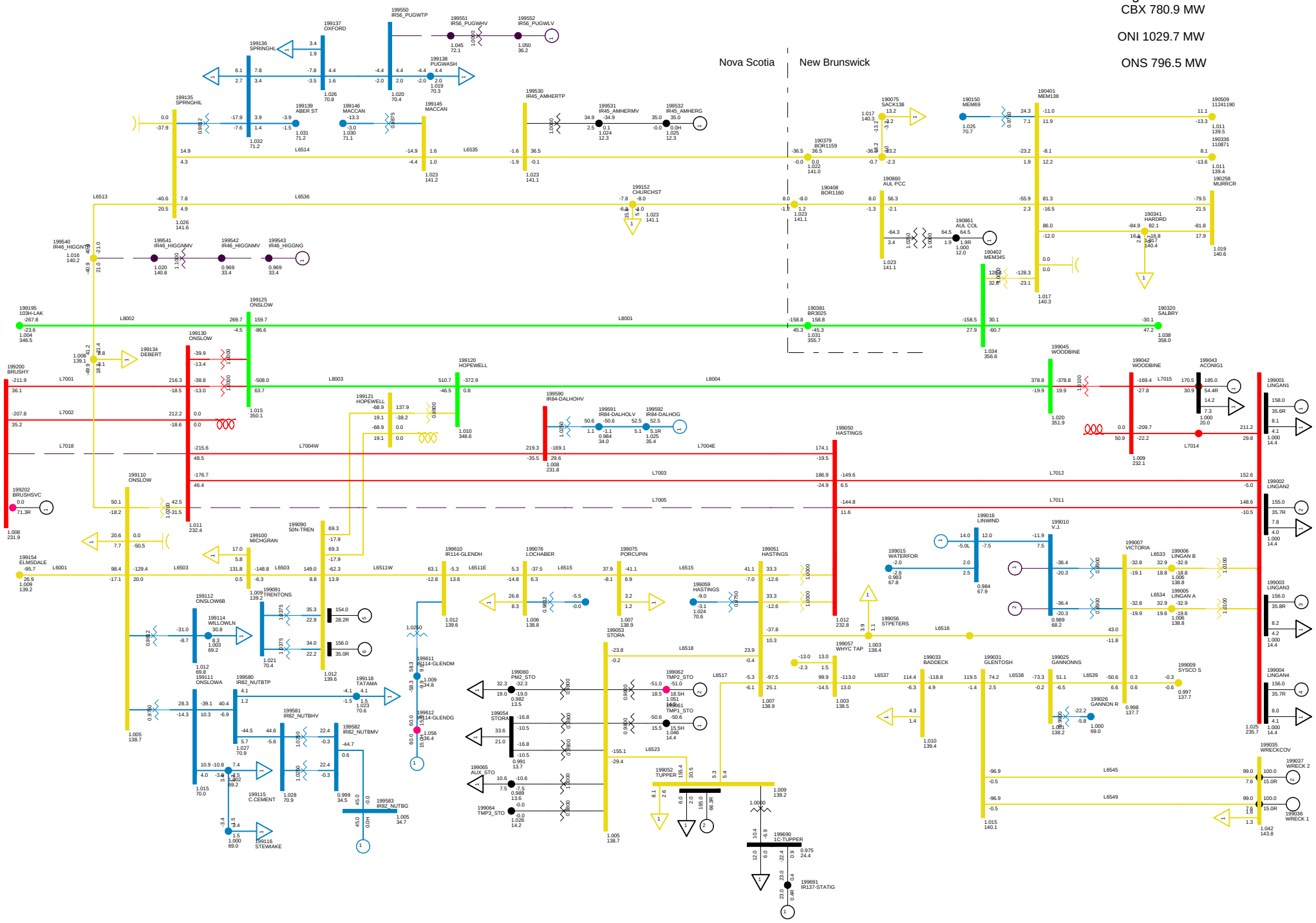

2013 SUMMER PEAK NS EXPORT 200
C55 BBU 67N-712
NORTHEASTERN NS TUE, DEC 09 2008 23:00

Total Wind Gen: 290.1 MW | Gross Tupper 165.0 MW | Gross Wreck Cove 200.0 MW | Net Stora Load 178.9 MW
Gross Lingan 625.0 MW | Gross Trenton 310.0 MW | Gross Gas Turbine 0.0 MW | Total BMPC Load 108.6 MW
Gross Pt Aconi 185.0 MW | Gross Tuft's Cove 133.2 MW | Gross Small Hydro 42.9 MW

Bus - VOLTAGE (KV/PU)
Branch - MW/MVAR
Equipment - MW/MVAR
110.0%RATEA
1.0500V 0.950UV
KV: <=25.000 <=69.000 <=138.000 <=230.000 <=345.000 >345.000

Figure ___

NSX 27.4 MW

CBX 629.2 MW

ONI 867.9 MW

ONS 794.8 MW

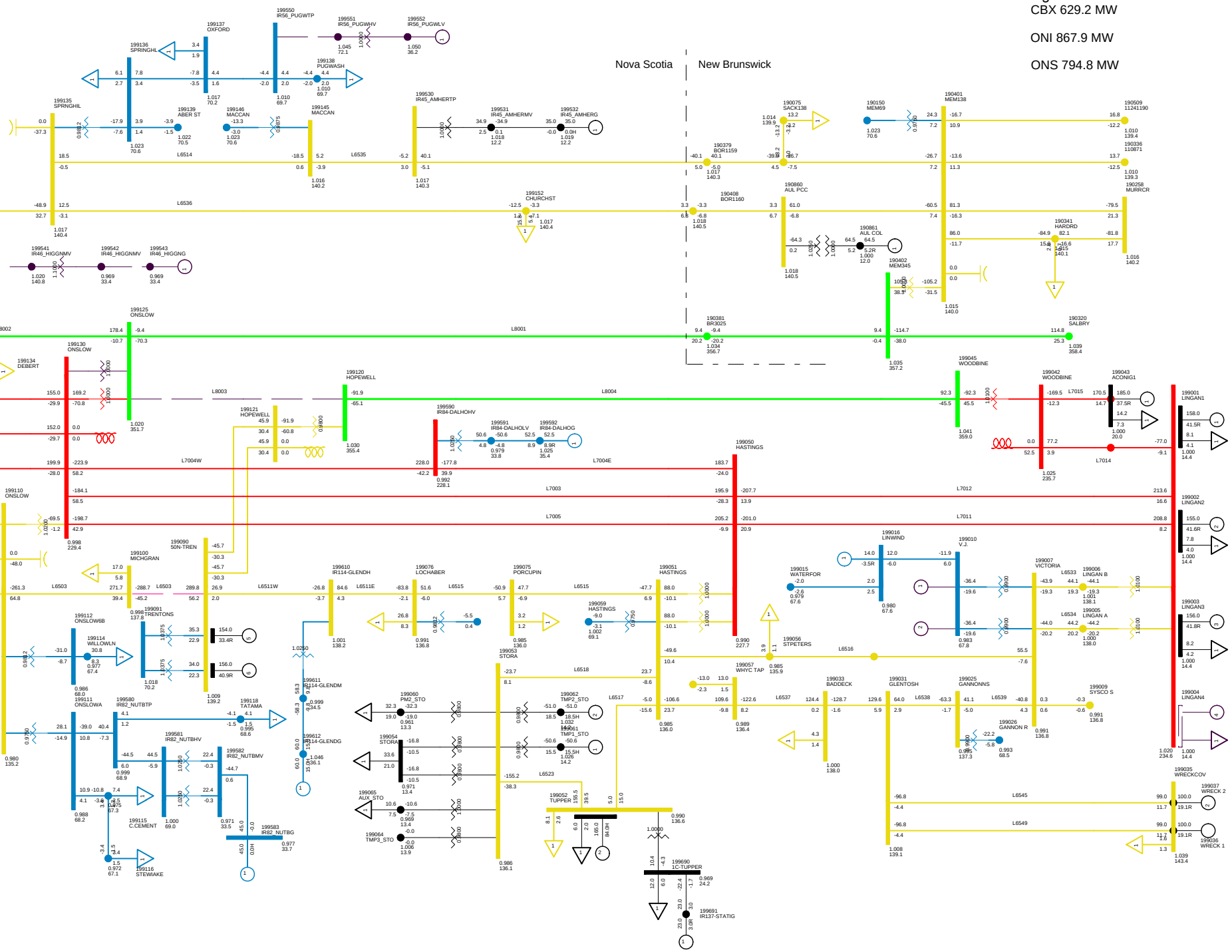

2013 SUMMER PEAK NS EXPORT 200
C56S BBU 67N-811 L8003 + T82 1 UNIT SPS
NORTHEASTERN NS TUE, DEC 09 2008 23:00

Total Wind Gen: 290.1 MW | Gross Tupper 165.0 MW | Gross Wreck Cove 200.0 MW | Net Stora Load 178.9 MW
Gross Lingan 469.0 MW | Gross Trenton 310.0 MW | Gross Gas Turbine 0.0 MW | Total BMPC Load 108.6 MW
Gross Pt Aconi 185.0 MW | Gross Tuft's Cove 133.2 MW | Gross Small Hydro 42.9 MW

Bus - VOLTAGE (KV/PU)
Branch - MW/MVAR
Equipment - MW/MVAR
110.0%RATEA
1.050OV 0.950UV
KV: <=25.000 <=69.000 <=138.000 <=230.000 <=345.000 >345.000

Figure ___

NSX -93.8 MW

CBX 492.7 MW

ONI 744.3 MW

ONS 793.3 MW

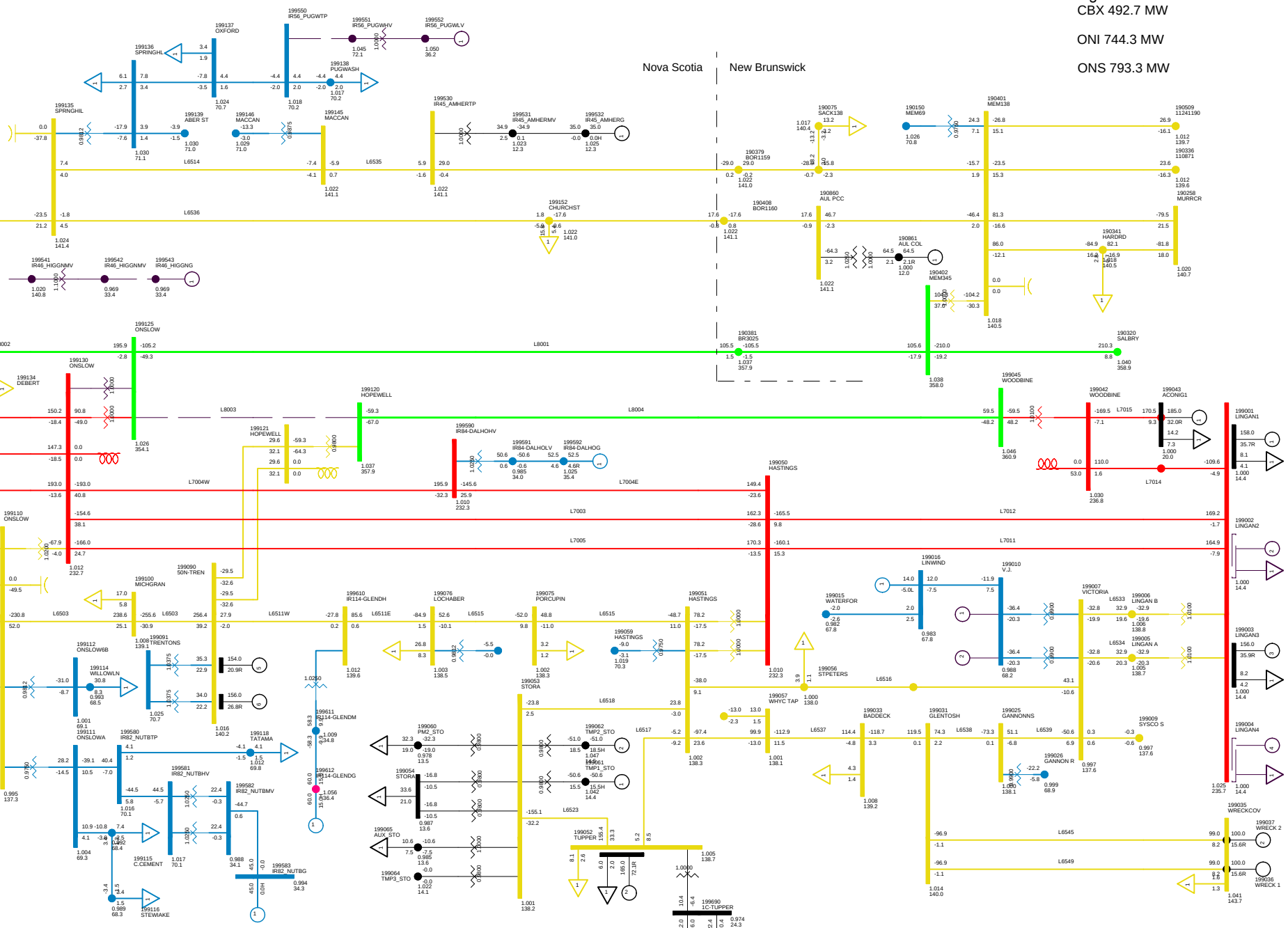

2013 SUMMER PEAK NS EXPORT 200
C56SS BBU 67N-811 L8003 + T82 2 UNIT SPS
NORTHEASTERN NS TUE, DEC 09 2008 23:00

Total Wind Gen: 290.1 MW | Gross Tupper 165.0 MW | Gross Wreck Cove 200.0 MW | Net Stora Load 178.9 MW
Gross Lingan 314.0 MW | Gross Trenton 310.0 MW | Gross Gas Turbine 0.0 MW | Total BMPC Load 108.5 MW
Gross Pt Aconi 185.0 MW | Gross Tuft's Cove 133.2 MW | Gross Small Hydro 42.9 MW

Bus - VOLTAGE (KV/PU)
Branch - MW/MVAR
Equipment - MW/MVAR
110.0%RATEA
1.050OV 0.950UV
KV: <=25.000 <=69.000 <=138.000 <=230.000 <=345.000 >345.000

Figure ___

NSX 16.8 MW
CBX 628.7 MW
ONI 866.5 MW
ONS 804.5 MW

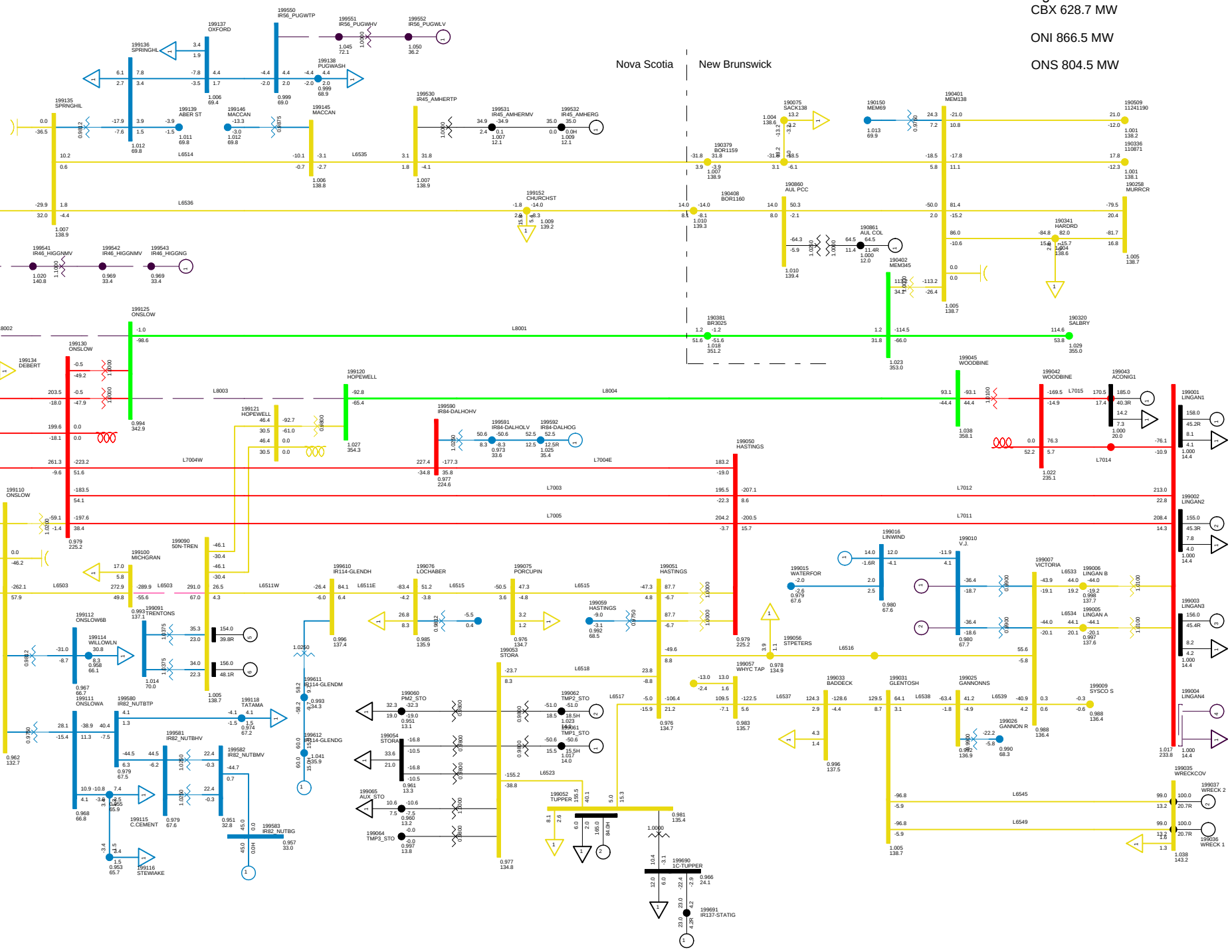

2013 SUMMER PEAK NS EXPORT 200
C57S BBU 67N-812 1-UNIT SPS
NORTHEASTERN NS TUE, DEC 09 2008 23:00

Total Wind Gen: 290.1 MW | Gross Tupper 165.0 MW | Gross Wreck Cove 200.0 MW | Net Stora Load 178.9 MW
Gross Lingan 469.0 MW | Gross Trenton 310.0 MW | Gross Gas Turbine 0.0 MW | Total BMPC Load 108.5 MW
Gross Pt Aconi 185.0 MW | Gross Tuft's Cove 133.2 MW | Gross Small Hydro 42.9 MW

Bus - VOLTAGE (KV/PU)
Branch - MW/MVAR
Equipment - MW/MVAR
110.0%RATEA
1.050OV 0.950UV
KV: <=25.000 <=69.000 <=138.000 <=230.000 <=345.000 >345.000

Figure ___

NSX -103.2 MW

CBX 492.7 MW

ONI 744.2 MW

ONS 802.9 MW

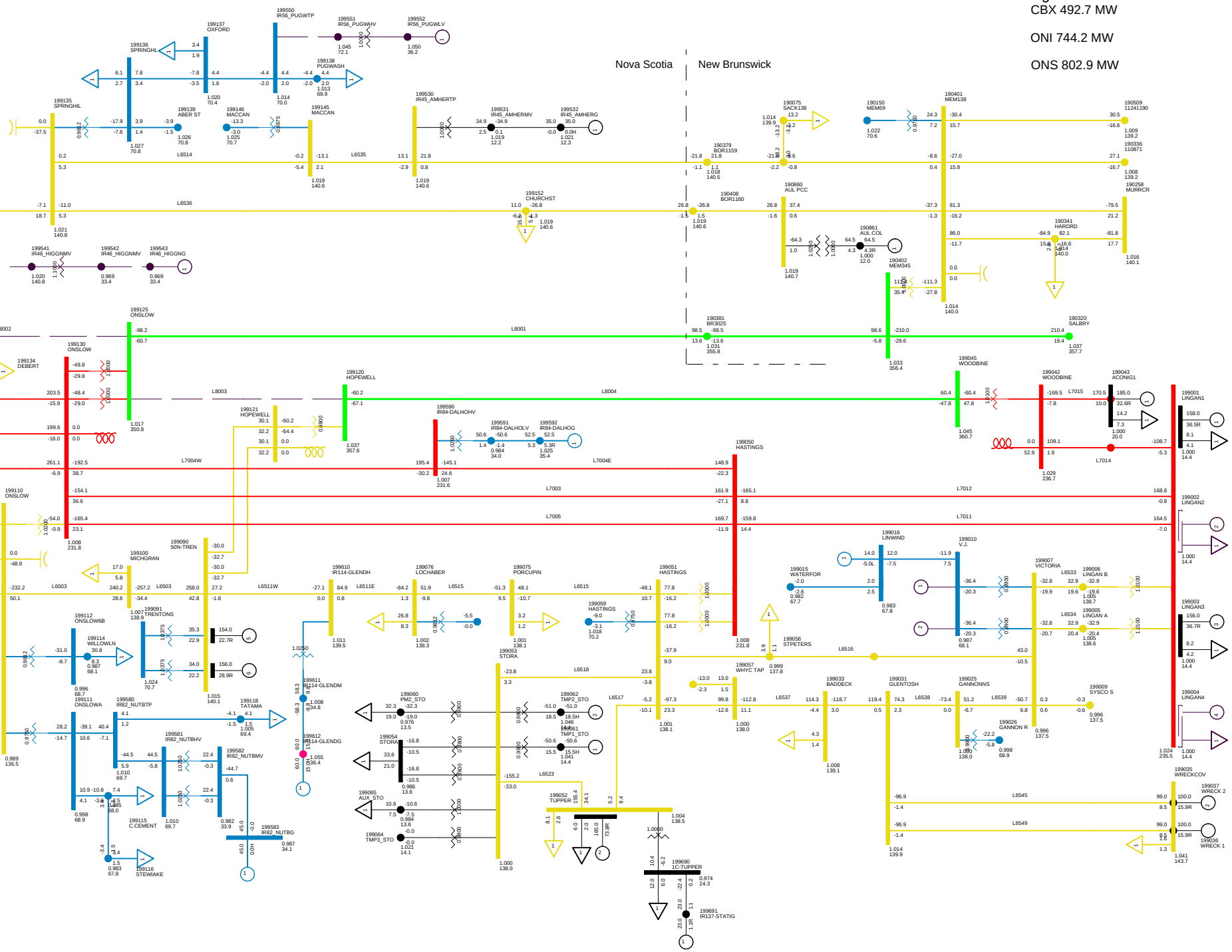

2013 SUMMER PEAK NS EXPORT 200
C57SS BBU 67N-812 2-UNIT SPS
NORTHEASTERN NS TUE, DEC 09 2008 23:01

Total Wind Gen: 290.1 MW | Gross Tupper 165.0 MW | Gross Wreck Cove 200.0 MW | Net Stora Load 178.9 MW
Gross Lingan 314.0 MW | Gross Trenton 310.0 MW | Gross Gas Turbine 0.0 MW | Total BMPC Load 108.6 MW
Gross Pt Aconi 185.0 MW | Gross Tuft's Cove 133.2 MW | Gross Small Hydro 42.9 MW

Bus - VOLTAGE (KV/PU)
Branch - MW/MVAR
Equipment - MW/MVAR
110.0%RATEA
1.050OV 0.950UV
KV: <=25.000 <=69.000 <=138.000 <=230.000 <=345.000 >345.000

Figure ___

NSX 19.7 MW

CBX 620.2 MW

ONI 859.3 MW

ONS 794.3 MW

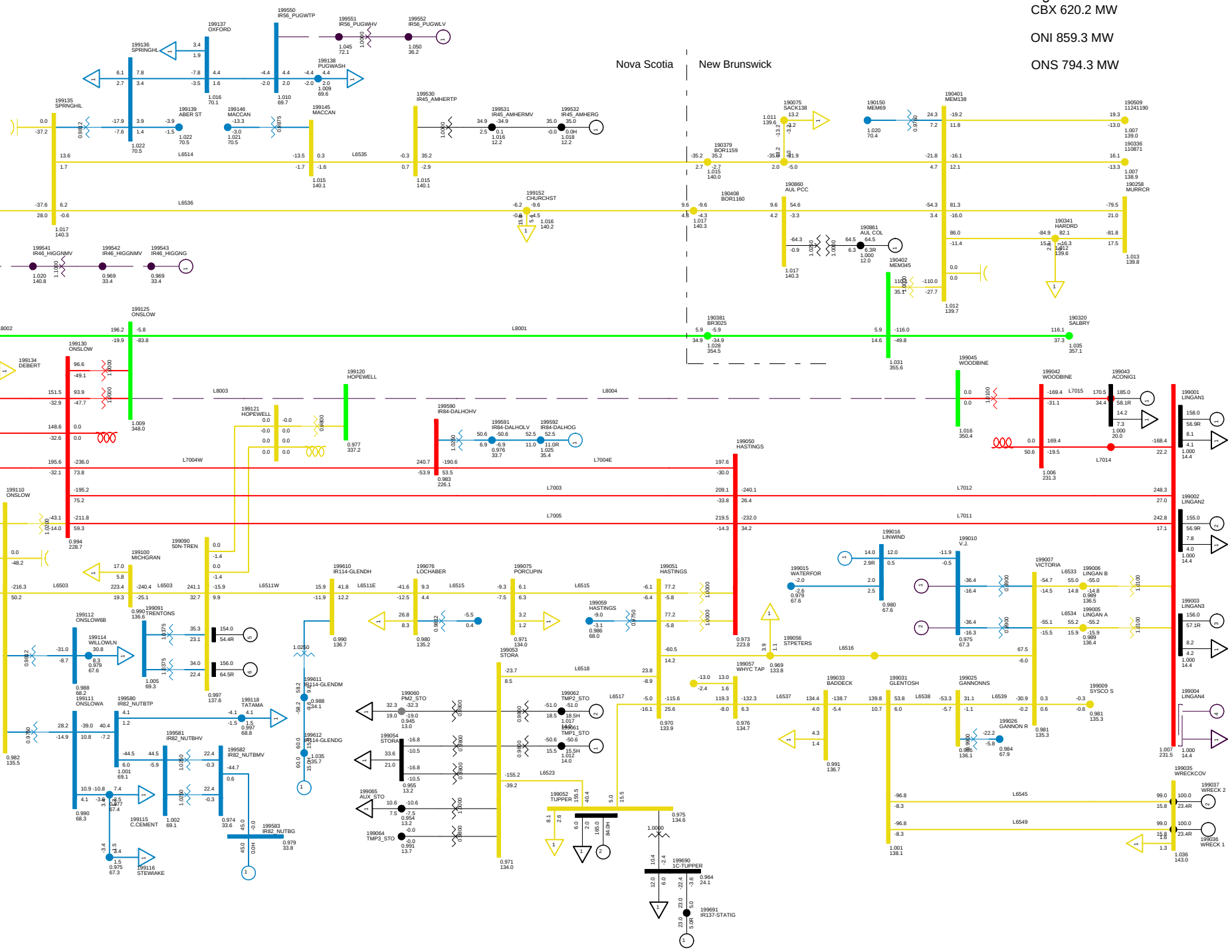

2013 SUMMER PEAK NS EXPORT 200
C58S BBU 79N-810 1-UNIT SPS
NORTHEASTERN NS TUE, DEC 09 2008 23:01

Total Wind Gen: 290.1 MW | Gross Tupper 165.0 MW | Gross Wreck Cove 200.0 MW | Net Stora Load 179.0 MW
Gross Lingan 469.0 MW | Gross Trenton 310.0 MW | Gross Gas Turbine 0.0 MW | Total BMPC Load 108.6 MW
Gross Pt Aconi 185.0 MW | Gross Tuft's Cove 133.2 MW | Gross Small Hydro 42.9 MW

Bus - VOLTAGE (KV/PU)
Branch - MW/MVAR
Equipment - MW/MVAR
110.0%RATEA
1.050OV 0.950UV
KV: <=25.000 <=69.000 <=138.000 <=230.000 <=345.000 >345.000

Figure ___

NSX -97.2 MW

CBX 488.1 MW

ONI 740.5 MW

ONS 793.1 MW

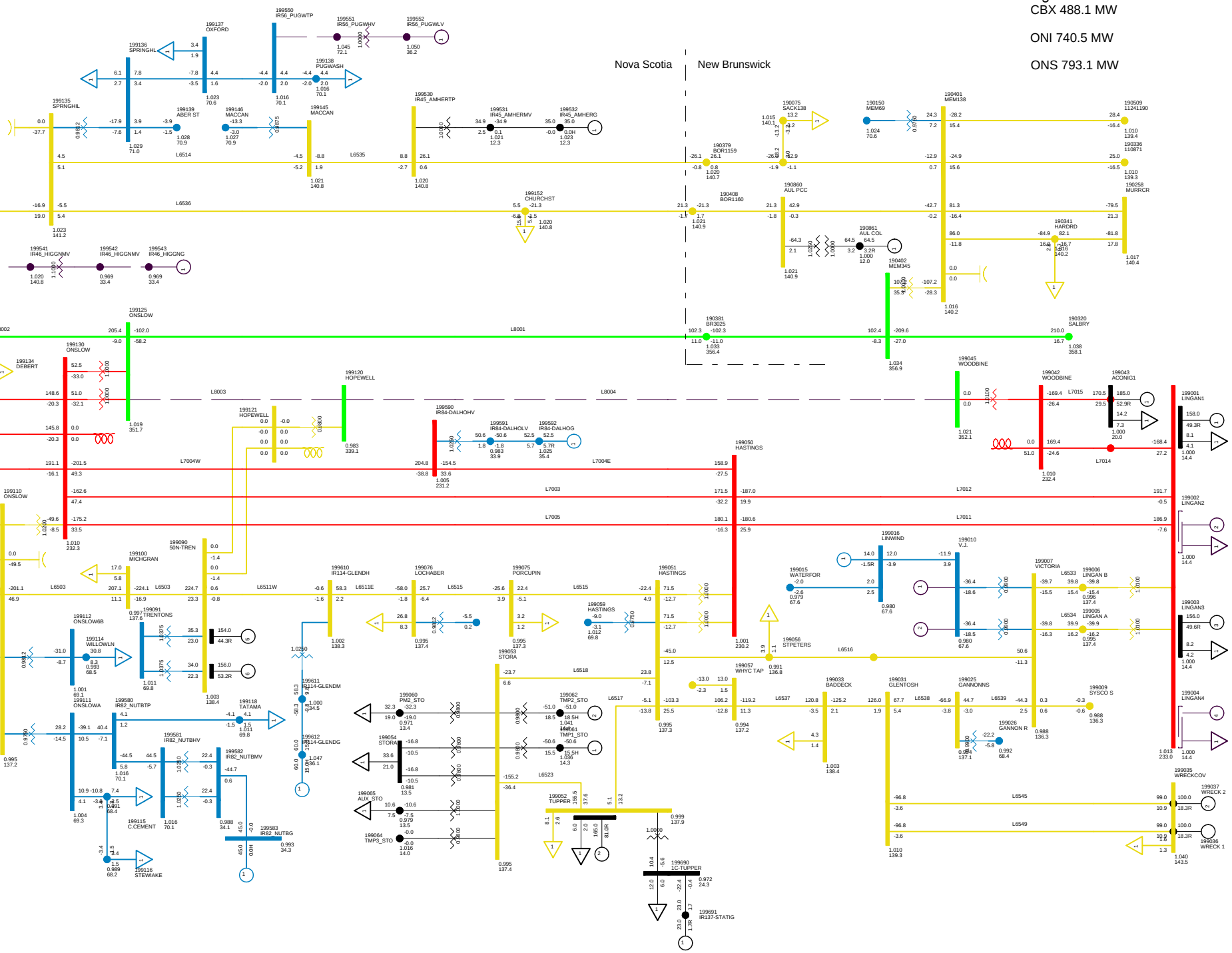

2013 SUMMER PEAK NS EXPORT 200
C58SS BBU 79N-810 2-UNIT SPS
NORTHEASTERN NS TUE, DEC 09 2008 23:01

Total Wind Gen: 290.1 MW | Gross Tupper 165.0 MW | Gross Wreck Cove 200.0 MW | Net Stora Load 178.9 MW
Gross Lingan 314.0 MW | Gross Trenton 310.0 MW | Gross Gas Turbine 0.0 MW | Total BMPC Load 108.6 MW
Gross Pt Aconi 185.0 MW | Gross Tuft's Cove 133.2 MW | Gross Small Hydro 42.9 MW

Bus - VOLTAGE (KV/PU)
Branch - MW/MVAR
Equipment - MW/MVAR
110.0%RATEA
1.050OV 0.950UV
KV: <=25.000 <=69.000 <=138.000 <=230.000 <=345.000 >345.000

Figure ___

NSX -67.0 MW

CBX 499.6 MW

ONI 768.5 MW

ONS 791.3 MW

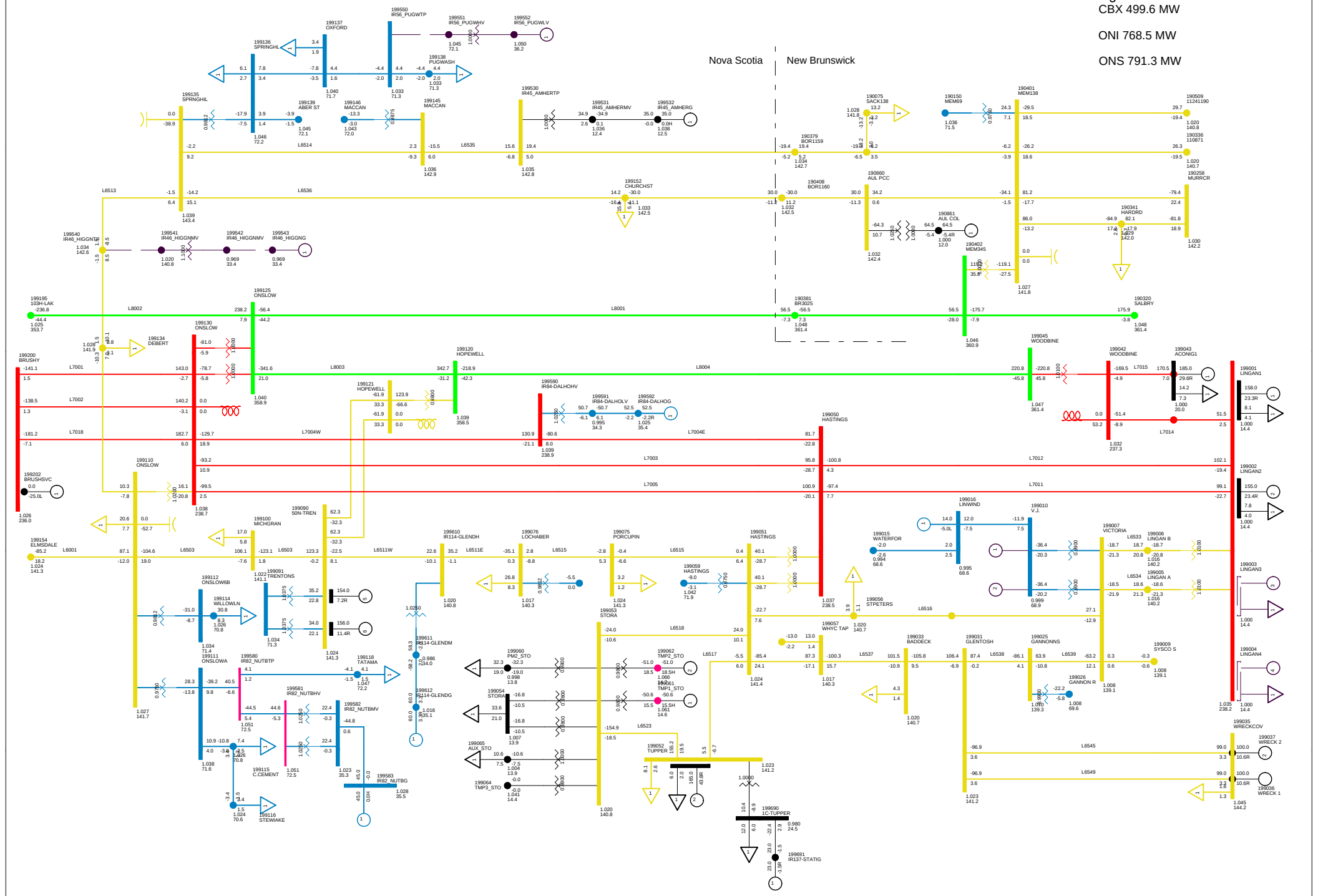

2013 SUMMER PEAK NS EXPORT 200
C59 BBU 88S-721 TRIP LINGAN 3 AND 4
NORTHEASTERN NS TUE, DEC 09 2008 23:01

Total Wind Gen: 290.1 MW | Gross Tupper 165.0 MW | Gross Wreck Cove 200.0 MW | Net Stora Load 178.9 MW
Gross Lingan 313.0 MW | Gross Trenton 310.0 MW | Gross Gas Turbine 0.0 MW | Total BMPC Load 108.6 MW
Gross Pt Aconi 185.0 MW | Gross Tuft's Cove 133.2 MW | Gross Small Hydro 42.9 MW

Bus - VOLTAGE (KV/PU)
Branch - MW/MVAR
Equipment - MW/MVAR
110.0%RATEA
1.050OV 0.950UV
KV: <=25.000 <=69.000 <=138.000 <=230.000 <=345.000 >345.000

Figure ___

NSX 195.1 MW
CBX 781.8 MW
ONI 1032.1 MW
ONS 792.0 MW

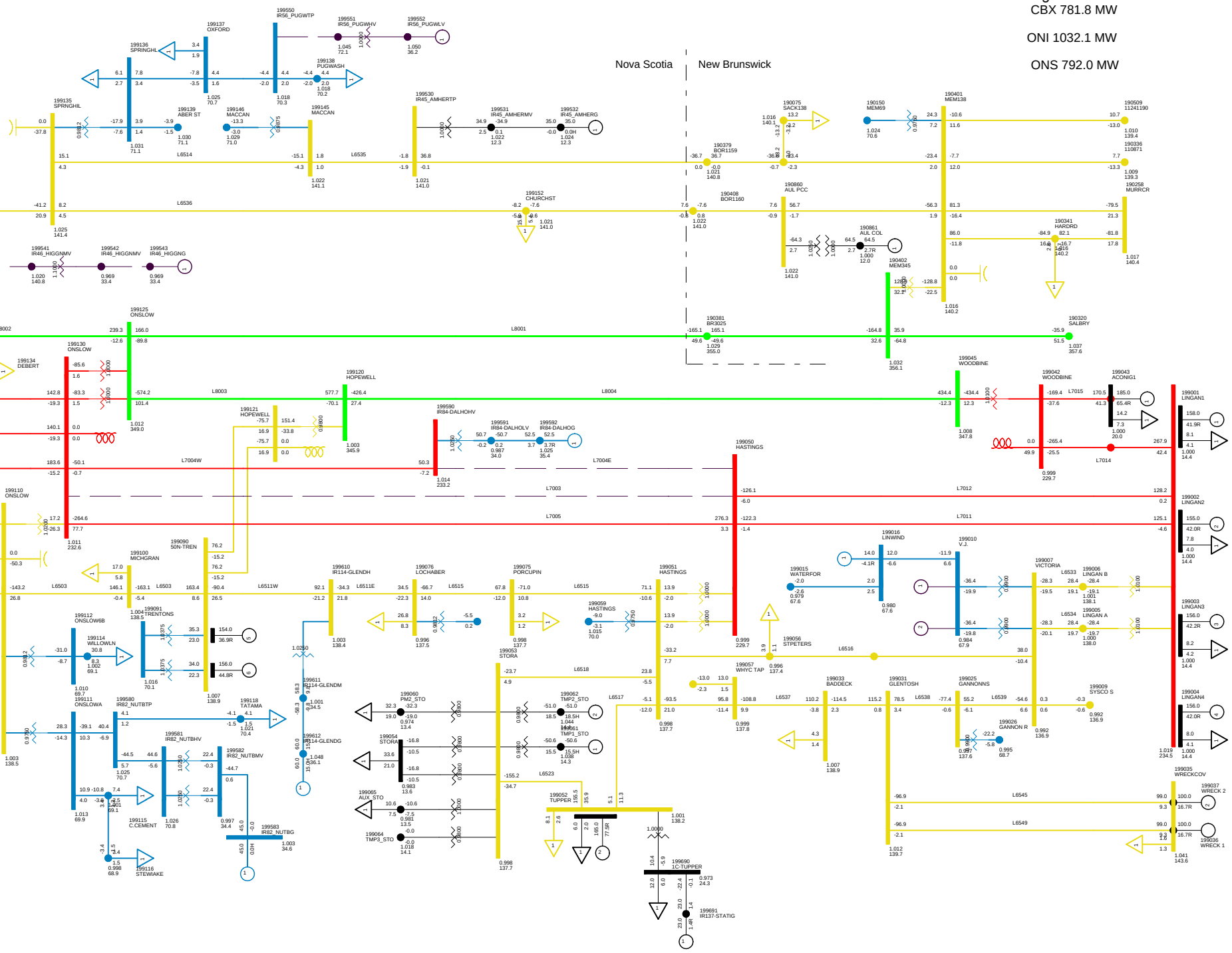

2013 SUMMER PEAK NS EXPORT 200
C60 DCT ON L7003+L7004
NORTHEASTERN NS TUE, DEC 09 2008 23:01

Total Wind Gen: 290.1 MW | Gross Tupper 165.0 MW | Gross Wreck Cove 200.0 MW | Net Stora Load 178.9 MW
Gross Lingan 625.0 MW | Gross Trenton 310.0 MW | Gross Gas Turbine 0.0 MW | Total BMPC Load 108.6 MW
Gross Pt Aconi 185.0 MW | Gross Tuft's Cove 133.2 MW | Gross Small Hydro 42.9 MW

Bus - VOLTAGE (KV/PU)
Branch - MW/MVAR
Equipment - MW/MVAR
110.0%RATEA
1.050OV 0.950UV
KV: <=25.000 <=69.000 <=138.000 <=230.000 <=345.000 >345.000

Figure ___

CBX 620.3 MW

ONI 848.4 MW

ONS 793.4 MW

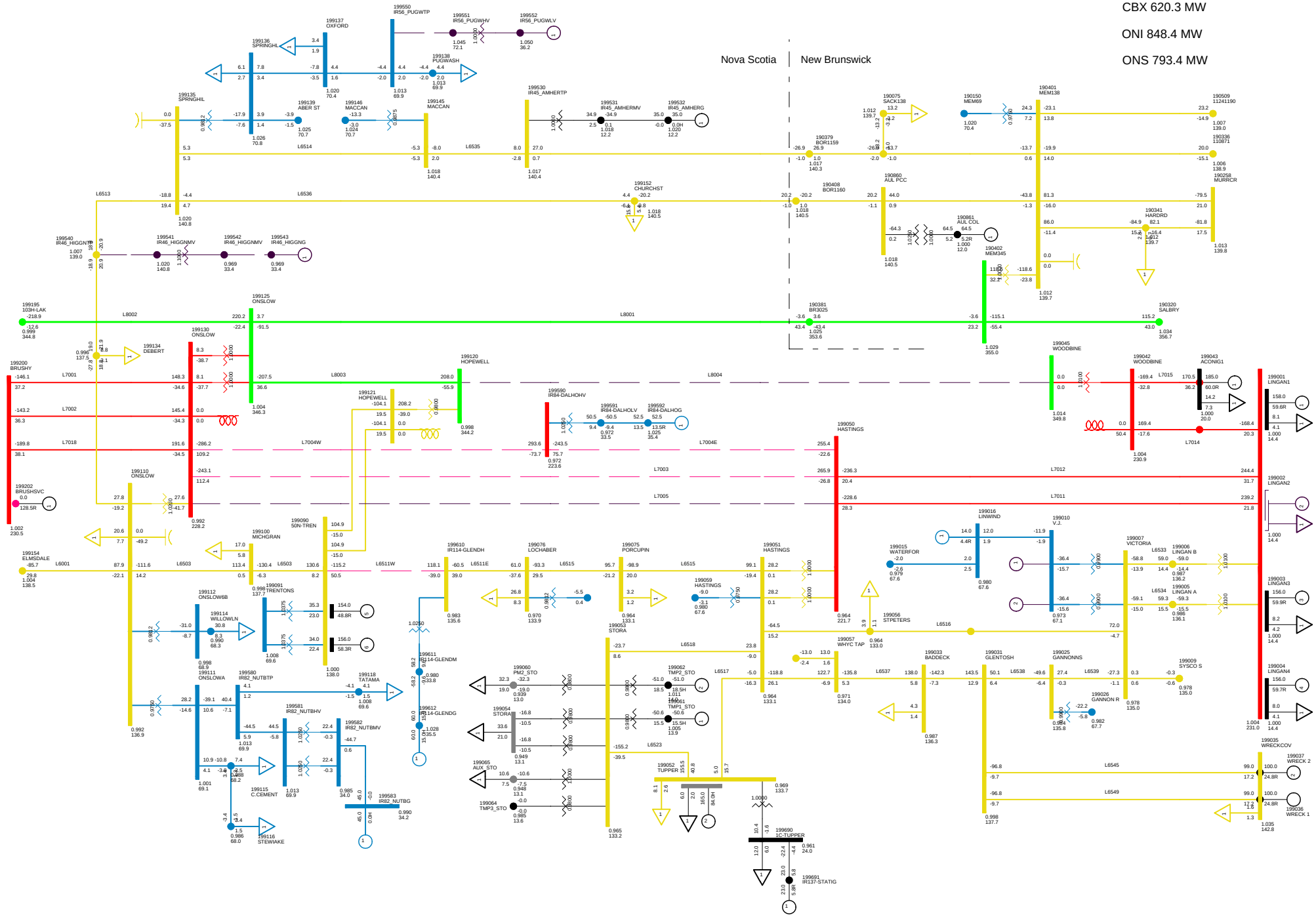

2013 SUMMER PEAK NS EXPORT 200
C61S DCT ON STRAIT CROSSING L8004-L7005 WITH 1-UNIT SPS
NORTHEASTERN NS TUE, DEC 09 2008 23:02

Total Wind Gen: 290.1 MW
Gross Lingan 470.0 MW
Gross Pt Aconi 185.0 MW
Gross Tupper 165.0 MW
Gross Trenton 310.0 MW
Gross Tuft's Cove 133.2 MW
Gross Wreck Cove 200.0 MW
Gross Gas Turbine 0.0 MW
Gross Small Hydro 42.9 MW
Net Stora Load 179.0 MW
Total BMPC Load 108.6 MW

Bus - VOLTAGE (KV/PU)
Branch - MW/MVAR
Equipment - MW/MVAR
110.0%RATEA
1.050OV 0.950UV
KV: <=25.000 <=69.000 <=138.000 <=230.000 <=345.000 >345.000

Figure ___

CBX 488.0 MW

ONI 736.4 MW

ONS 792.3 MW

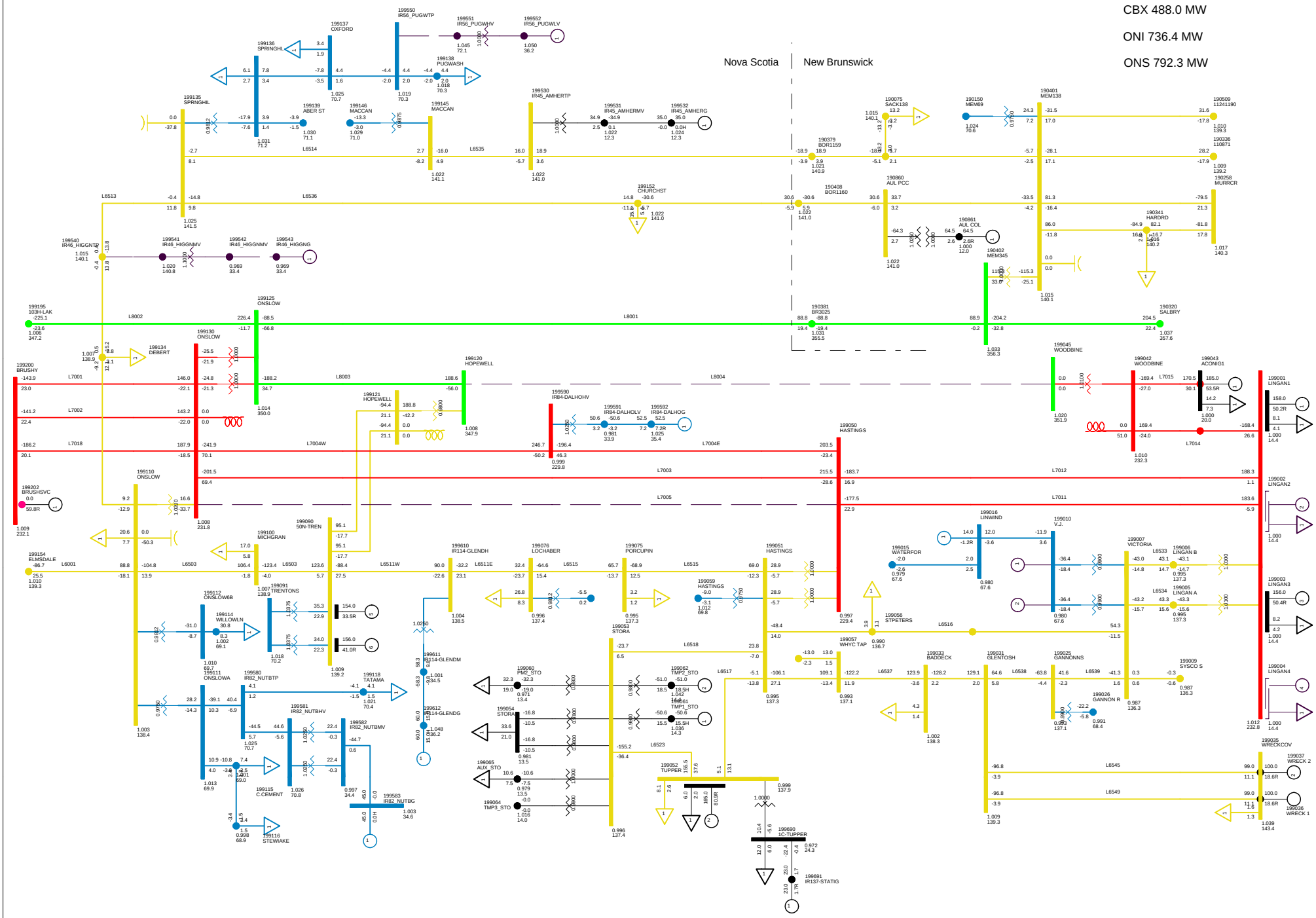

2013 SUMMER PEAK NS EXPORT 200
C61SS DCT ON STRAIT CROSSING L8004-L7005 WITH 2-UNIT SPS
NORTHEASTERN NS TUE, DEC 09 2008 23:02

Total Wind Gen: 290.1 MW
Gross Lingan 314.0 MW
Gross Pt Aconi 185.0 MW

Gross Tupper 165.0 MW
Gross Trenton 310.0 MW
Gross Tuft's Cove 133.2 MW

Gross Wreck Cove 200.0 MW
Gross Gas Turbine 0.0 MW
Gross Small Hydro 42.9 MW

Net Stora Load 178.9 MW
Total BMPC Load 108.6 MW

Bus - VOLTAGE (KV/PU)
Branch - MW/MVAR
Equipment - MW/MVAR
110.0%RATEA
1.050OV 0.950UV
KV: <=25.000 <=69.000 <=138.000 <=230.000 <=345.000 >345.000

Figure ___

NSX -67.0 MW

CBX 499.6 MW

ONI 768.5 MW

ONS 791.3 MW

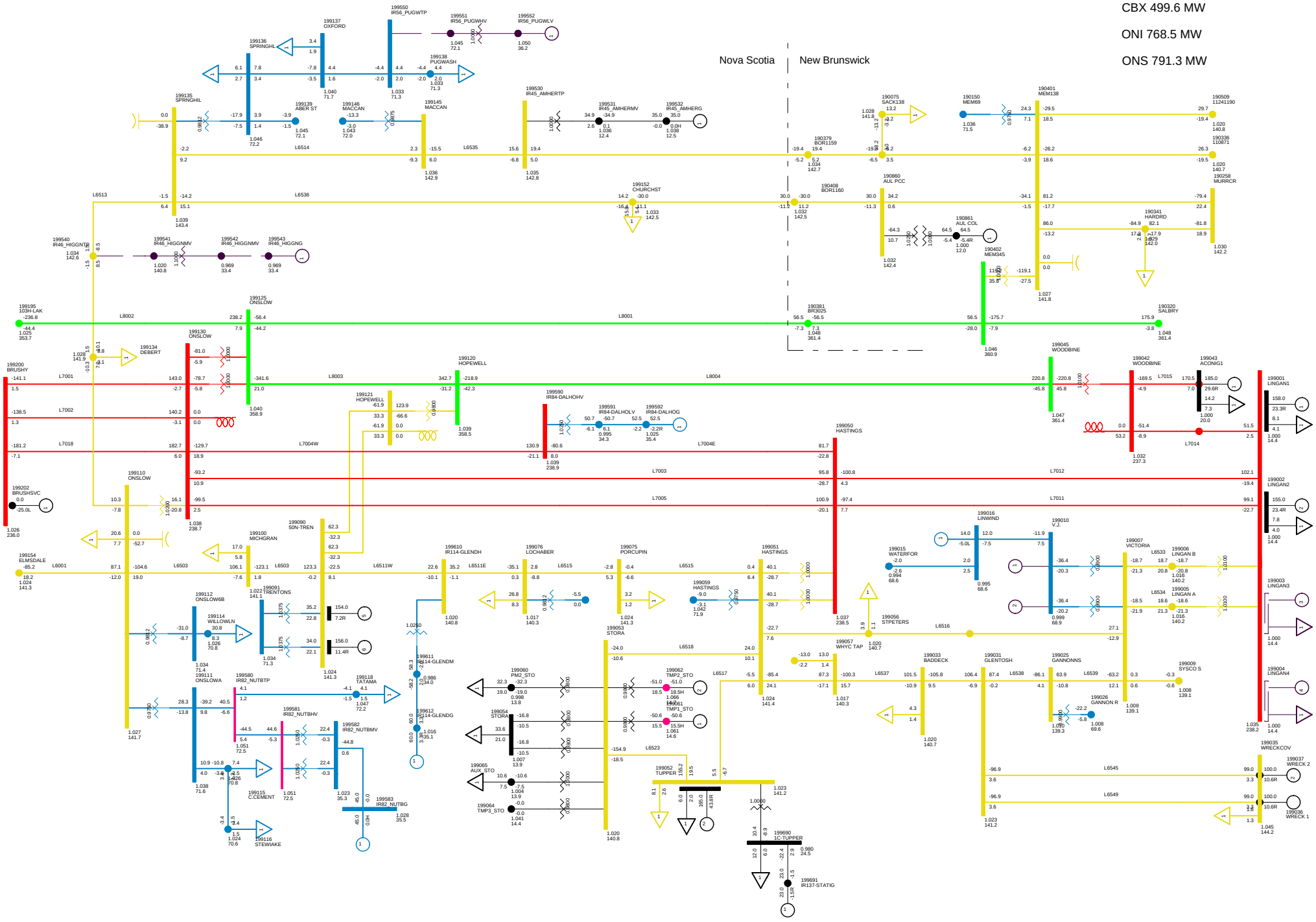

2013 SUMMER PEAK NS EXPORT 200
C62 FAULT ON BREAKER 88S-721 TRIPS LINGAN 3 AND 4
NORTHEASTERN NS TUE, DEC 09 2008 23:02

Total Wind Gen: 290.1 MW | Gross Tupper 165.0 MW | Gross Wreck Cove 200.0 MW | Net Stora Load 178.9 MW
Gross Lingan 313.0 MW | Gross Trenton 310.0 MW | Gross Gas Turbine 0.0 MW | Total BMPC Load 108.6 MW
Gross Pt Aconi 185.0 MW | Gross Tuft's Cove 133.2 MW | Gross Small Hydro 42.9 MW

Bus - VOLTAGE (KV/PU)
Branch - MW/MVAR
Equipment - MW/MVAR
110.0%RATEA
1.050OV 0.950UV
KV: <=25.000 <=69.000 <=138.000 <=230.000 <=345.000 >345.000

Figure ___

NSX 199.5 MW

CBX 779.8 MW

ONI 1036.4 MW

ONS 791.7 MW

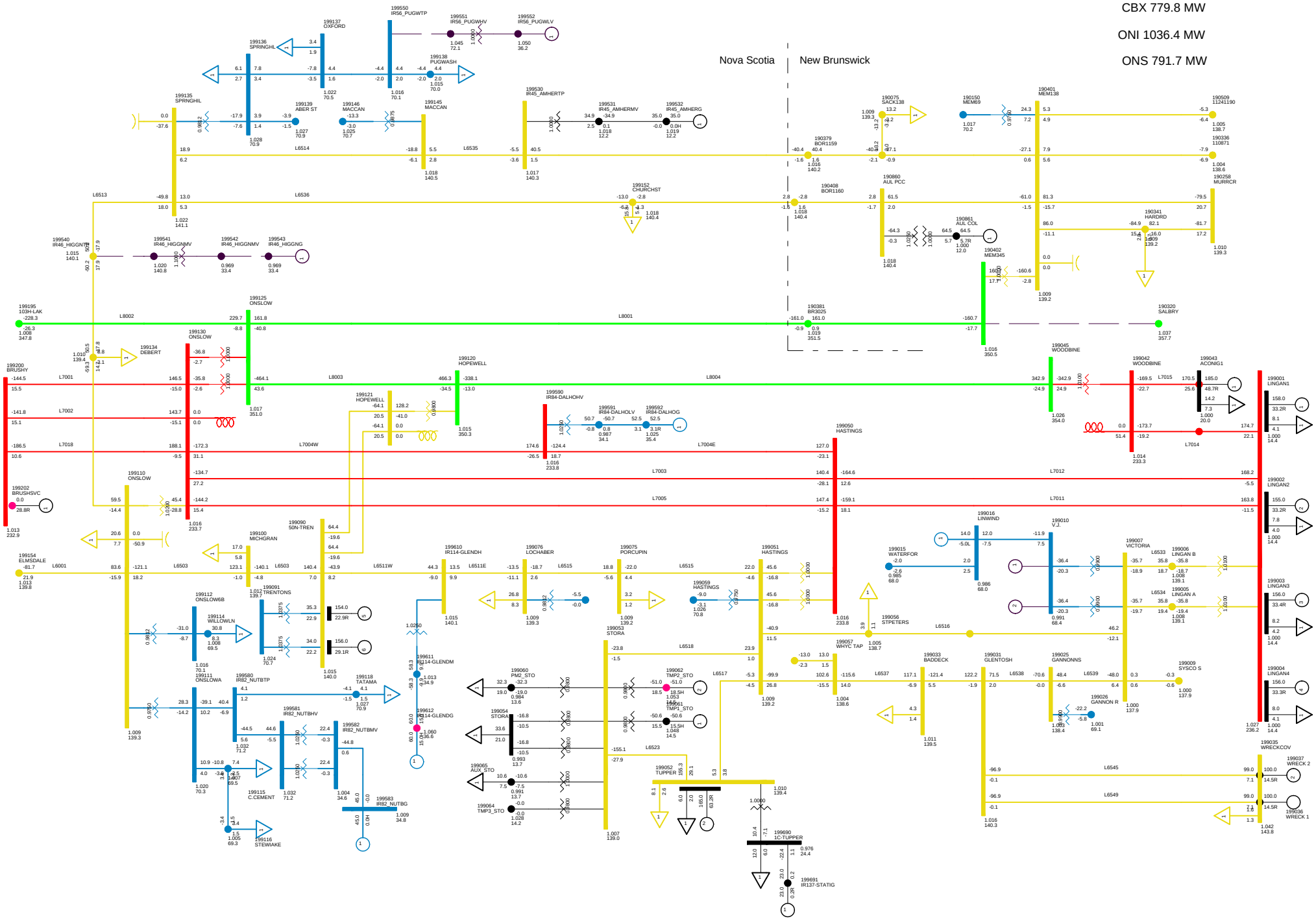

2013 SUMMER PEAK NS EXPORT 200
C63 FAULT ON SALISBURY SA3-2 TRIPS L3006 AND L3017
NORTHEASTERN NS TUE, DEC 09 2008 23:02

Total Wind Gen: 290.1 MW | Gross Tupper 165.0 MW | Gross Wreck Cove 200.0 MW | Net Stora Load 178.9 MW
Gross Lingan 625.0 MW | Gross Trenton 310.0 MW | Gross Gas Turbine 0.0 MW | Total BMPC Load 108.5 MW
Gross Pt Aconi 185.0 MW | Gross Tuft's Cove 133.2 MW | Gross Small Hydro 42.9 MW

Bus - VOLTAGE (KV/PU)
Branch - MW/MVAR
Equipment - MW/MVAR
110.0%RATEA
1.050OV 0.950UV
KV: <=25.000 <=69.000 <=138.000 <=230.000 <=345.000 >345.000

Figure ___

NSX 200.0 MW

CBX 780.0 MW

ONI 1036.7 MW

ONS 791.5 MW

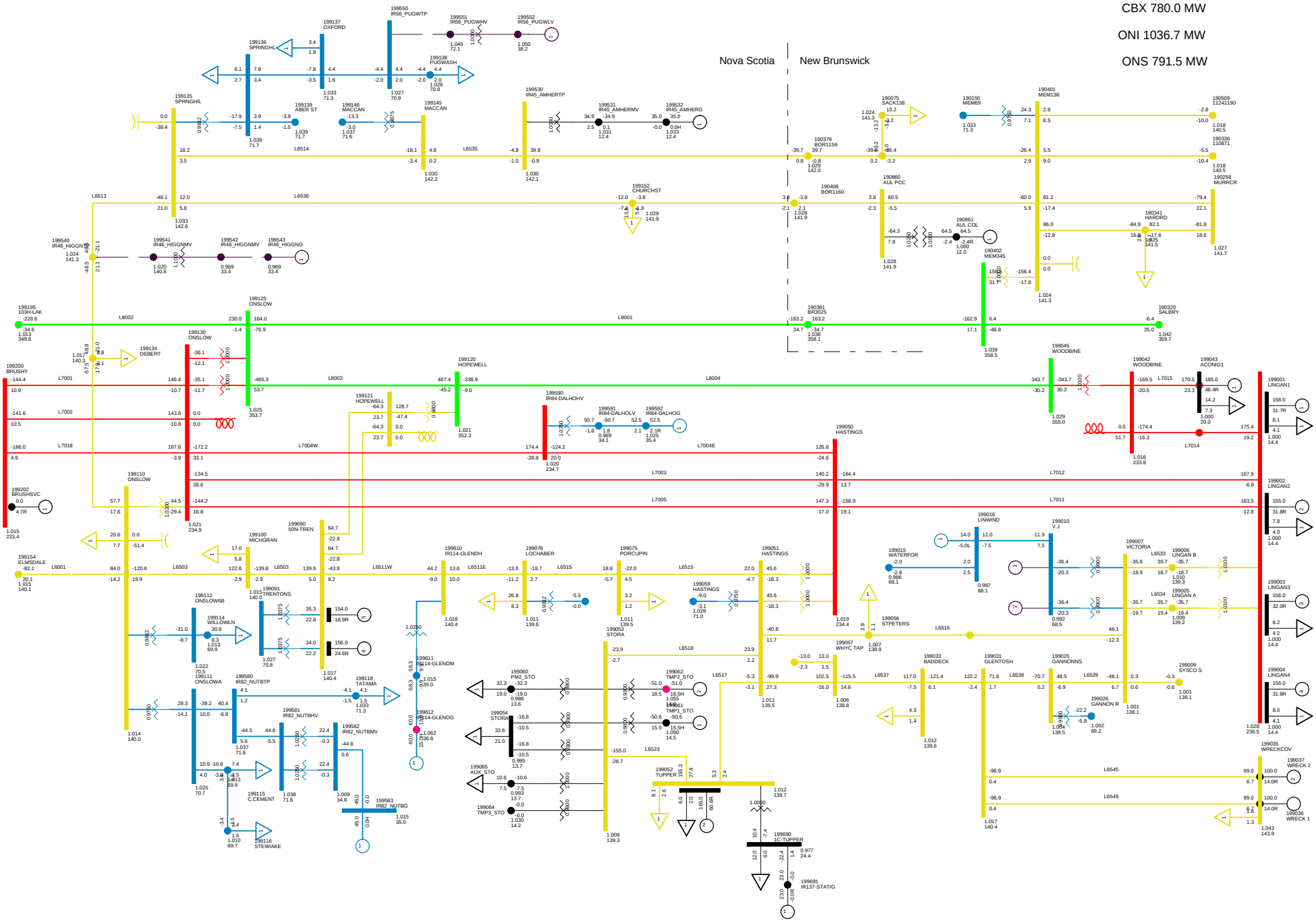

2013 SUMMER PEAK NS EXPORT 200
C64 FAULT ON BREAKER SALISBURY BREAKER SA3-4 TRIPS L3013 AND
NORTHEASTERN NS TUE, DEC 09 2008 23:02

Total Wind Gen: 290.1 MW
Gross Lingan 625.0 MW
Gross Pt Aconi 185.0 MW
Gross Tupper 165.0 MW
Gross Trenton 310.0 MW
Gross Tuft's Cove 133.2 MW
Gross Wreck Cove 200.0 MW
Gross Gas Turbine 0.0 MW
Gross Small Hydro 42.9 MW
Net Stora Load 178.9 MW
Total BMPC Load 108.5 MW

Bus - VOLTAGE (KV/PU)
Branch - MW/MVAR
Equipment - MW/MVAR
110.0%RATEA
1.050OV 0.950UV
KV: <=25.000 <=69.000 <=138.000 <=230.000 <=345.000 >345.000

Figure ____

NSX 299.9 MW

CBX 780.3 MW

ONI 1037.4 MW

ONS 692.0 MW

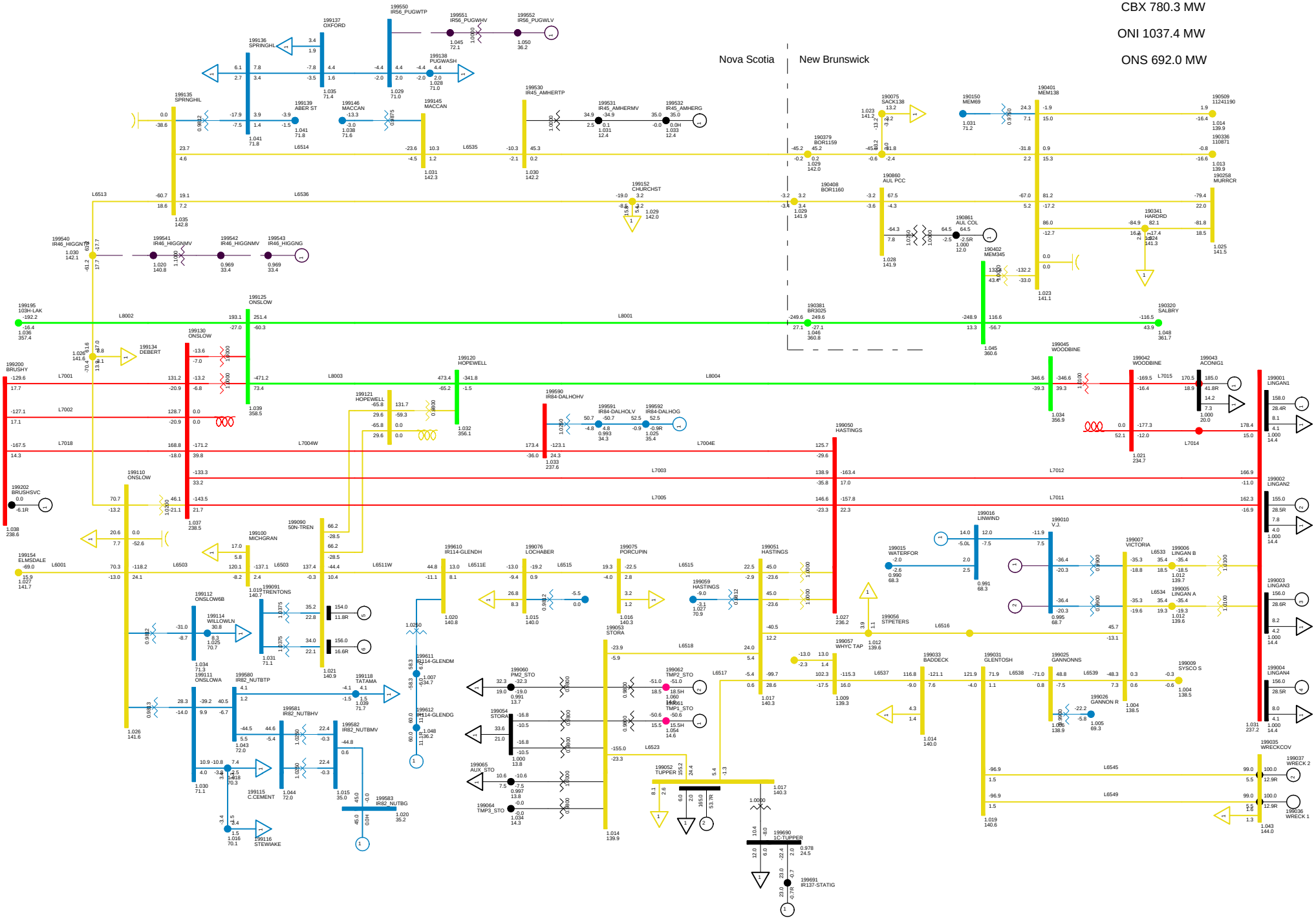

2010 SUMMER PEAK, NSLOAD=1700
NS-NB=+300; NB-NE=1000; CBX=780; ONI=1037 ONS=692
NORTHEASTERN NS TUE, DEC 09 2008 23:05

Total Wind Gen: 290.1 MW
Gross Lingan 625.0 MW
Gross Pt Aconi 185.0 MW
Gross Tupper 165.0 MW
Gross Trenton 310.0 MW
Gross Tuft's Cove 229.2 MW
Gross Wreck Cove 200.0 MW
Gross Gas Turbine 0.0 MW
Gross Small Hydro 42.9 MW
Net Stora Load 178.9 MW
Total BMPC Load 108.6 MW

Bus - VOLTAGE (KV/PU)
Branch - MW/MVAR
Equipment - MW/MVAR
110.0%RATEA
1.050OV 0.950UV
KV: <=25.000 <=69.000 <=138.000 <=230.000 <=345.000 >345.000

Figure ___

NSX 299.9 MW

CBX 780.3 MW

ONI 1037.4 MW

ONS 692.0 MW

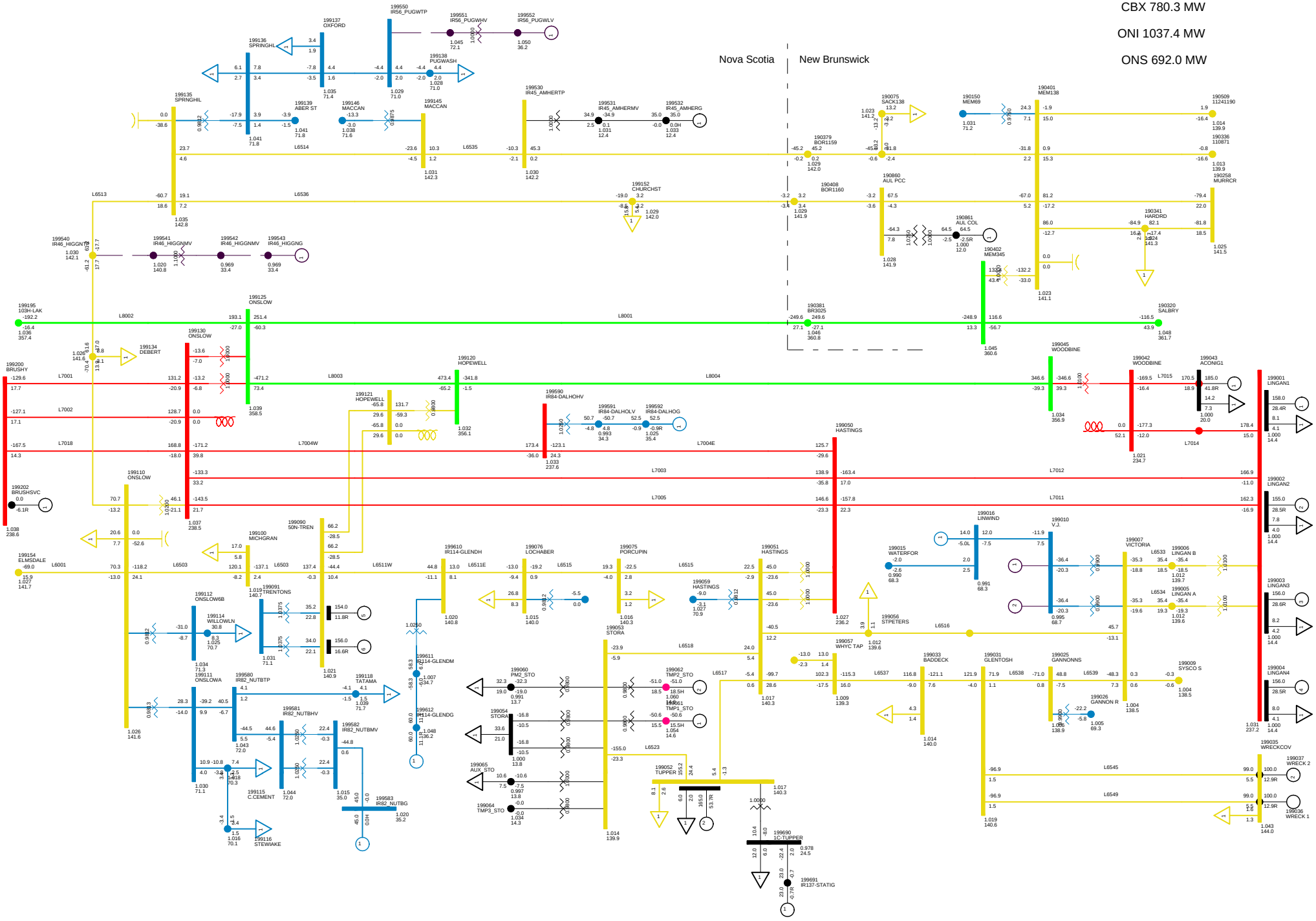

2010 SUMMER PEAK, NSLOAD=1700
NS-NB=+300; NB-NE=1000; CBX=780; ONI=1037 ONS=692
NORTHEASTERN NS TUE, DEC 09 2008 23:05

Total Wind Gen: 290.1 MW
Gross Lingan 625.0 MW
Gross Pt Aconi 185.0 MW
Gross Tupper 165.0 MW
Gross Trenton 310.0 MW
Gross Tuft's Cove 229.2 MW
Gross Wreck Cove 200.0 MW
Gross Gas Turbine 0.0 MW
Gross Small Hydro 42.9 MW
Net Stora Load 178.9 MW
Total BMPC Load 108.6 MW

Bus - VOLTAGE (KV/PU)
Branch - MW/MVAR
Equipment - MW/MVAR
110.0%RATEA
1.050OV 0.950UV
KV: <=25.000 <=69.000 <=138.000 <=230.000 <=345.000 >345.000

Figure ___

NSX 243.5 MW
CBX 750.0 MW
ONI 983.3 MW
ONS 694.0 MW

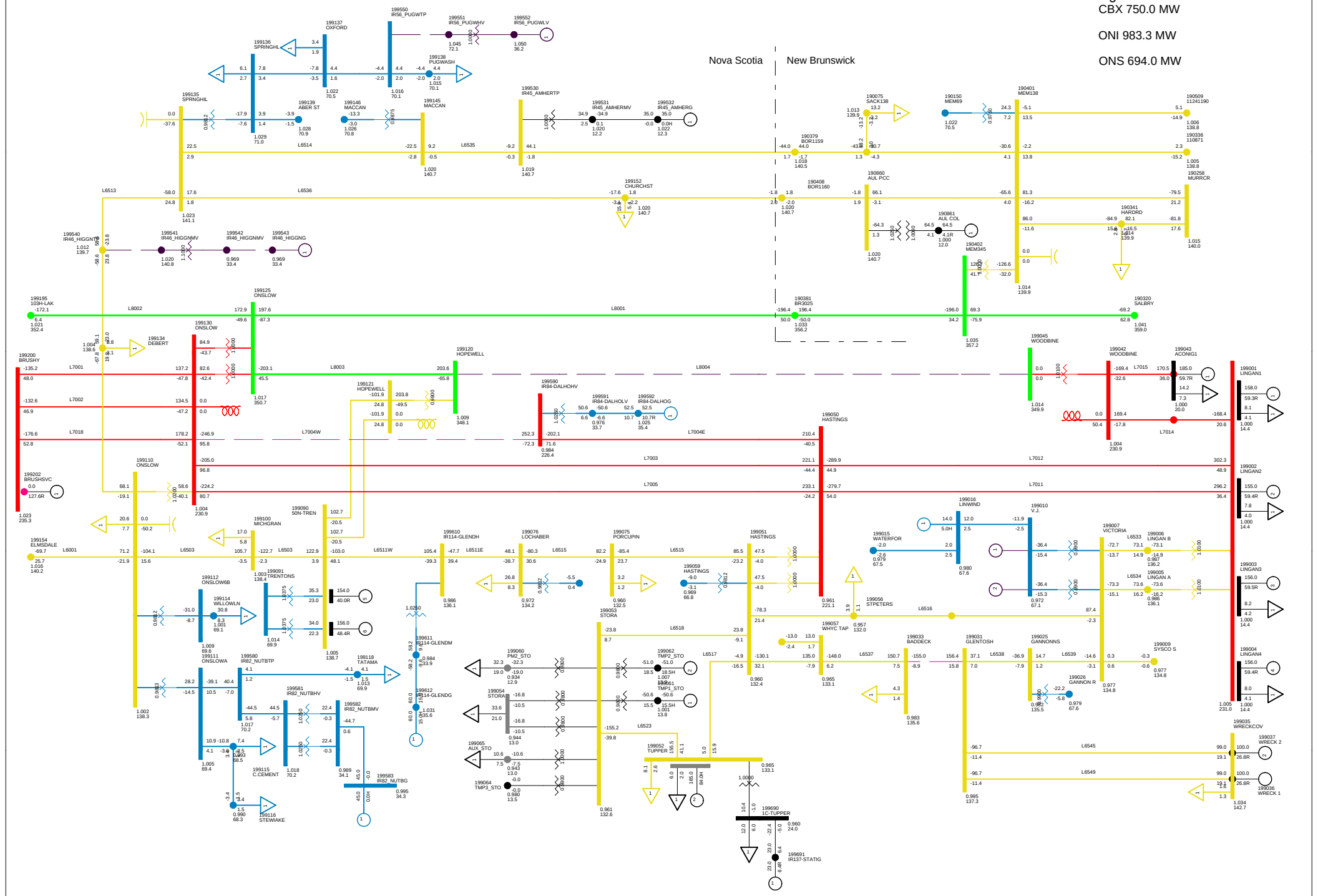

2013 SUMMER PEAK NS EXPORT 300 MW
C01 LOSE L8004 NO SPS
NORTHEASTERN NS TUE, DEC 09 2008 23:05

Total Wind Gen: 290.1 MW | Gross Tupper 165.0 MW | Gross Wreck Cove 200.0 MW | Net Stora Load 179.0 MW
Gross Lingan 625.0 MW | Gross Trenton 310.0 MW | Gross Gas Turbine 0.0 MW | Total BMPC Load 108.5 MW
Gross Pt Aconi 185.0 MW | Gross Tuft's Cove 229.2 MW | Gross Small Hydro 42.9 MW

Bus - VOLTAGE (KV/PU)
Branch - MW/MVAR
Equipment - MW/MVAR
110.0%RATEA
1.050OV 0.950UV
KV: <=25.000 <=69.000 <=138.000 <=230.000 <=345.000 >345.000

Figure ___

NSX 12.7 MW

CBX 488.6 MW

ONI 749.2 MW

ONS 692.1 MW

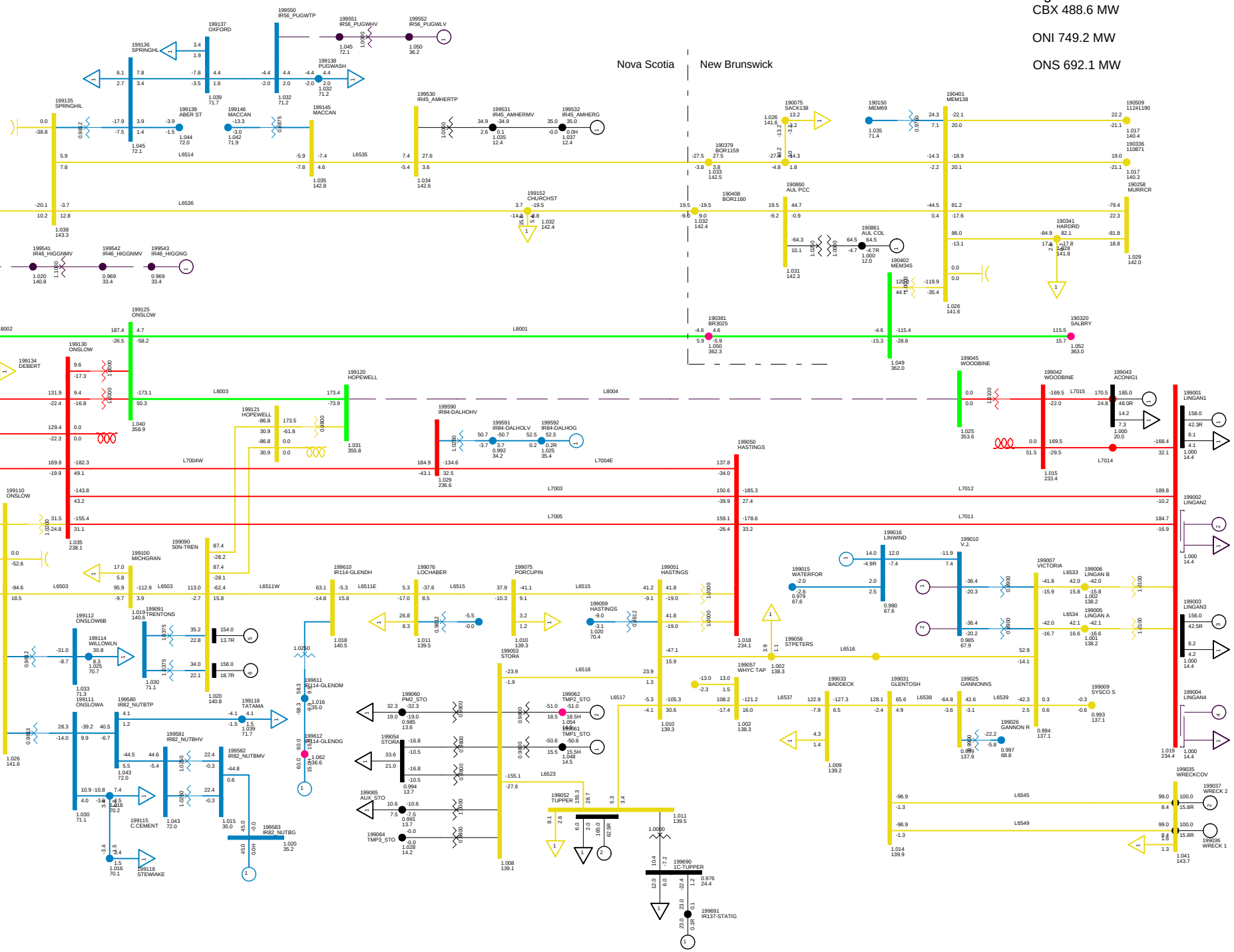

2013 SUMMER PEAK NS EXPORT 300 MW
C01SS LOSE L8004 WITH 2 UNIT SPS
NORTHEASTERN NS TUE, DEC 09 2008 23:06

Total Wind Gen: 290.1 MW
Gross Lingan 314.0 MW
Gross Pt Aconi 185.0 MW
Gross Tupper 165.0 MW
Gross Trenton 310.0 MW
Gross Tuft's Cove 229.2 MW
Gross Wreck Cove 200.0 MW
Gross Gas Turbine 0.0 MW
Gross Small Hydro 42.9 MW
Net Stora Load 178.9 MW
Total BMPC Load 108.6 MW

Bus - VOLTAGE (KV/PU)
Branch - MW/MVAR
Equipment - MW/MVAR
110.0%RATEA
1.0500V 0.950UV
KV: <=25.000 <=69.000 <=138.000 <=230.000 <=345.000 >345.000

Figure ___

NSX 129.3 MW
CBX 629.7 MW
ONI 869.3 MW
ONS 693.9 MW

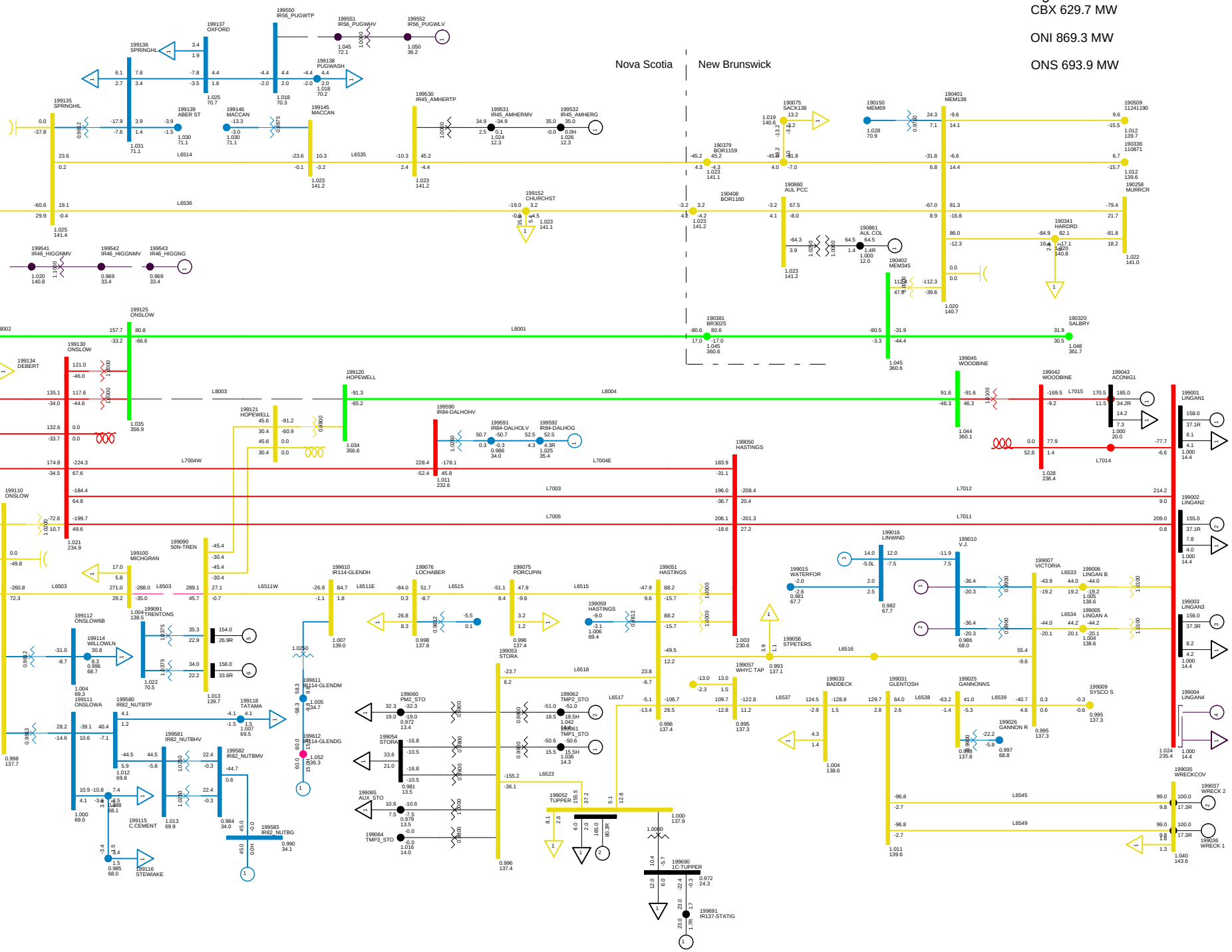

2013 SUMMER PEAK NS EXPORT 300 MW
C02S LOSE L8003 WITH 1-UNIT SPS
NORTHEASTERN NS TUE, DEC 09 2008 23:06

Total Wind Gen: 290.1 MW | Gross Tupper 165.0 MW | Gross Wreck Cove 200.0 MW | Net Stora Load 178.9 MW
Gross Lingan 469.0 MW | Gross Trenton 310.0 MW | Gross Gas Turbine 0.0 MW | Total BMPC Load 108.6 MW
Gross Pt Aconi 185.0 MW | Gross Tuft's Cove 229.2 MW | Gross Small Hydro 42.9 MW

Bus - VOLTAGE (KV/PU)
Branch - MW/MVAR
Equipment - MW/MVAR
110.0%RATEA
1.050OV 0.950UV
KV: <=25.000 <=69.000 <=138.000 <=230.000 <=345.000 >345.000

Figure ___

NSX 7.0 MW

CBX 493.0 MW

ONI 745.0 MW

ONS 693.1 MW

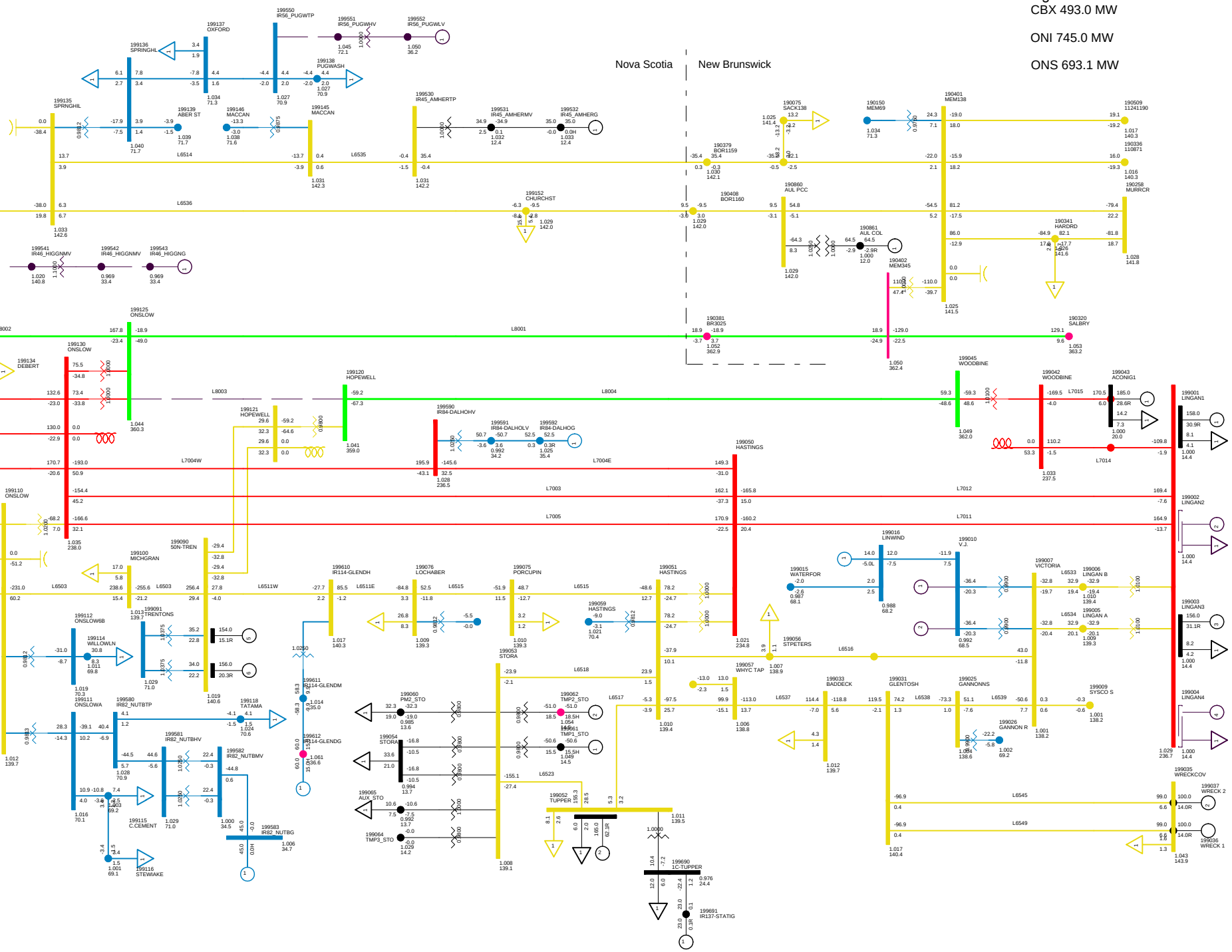

2013 SUMMER PEAK NS EXPORT 300 MW
C02SS LOSE L8003 WITH 2-UNIT SPS
NORTHEASTERN NS TUE, DEC 09 2008 23:06

Total Wind Gen: 290.1 MW
Gross Lingan 314.0 MW
Gross Pt Aconi 185.0 MW
Gross Tupper 165.0 MW
Gross Trenton 310.0 MW
Gross Tuft's Cove 229.2 MW
Gross Wreck Cove 200.0 MW
Gross Gas Turbine 0.0 MW
Gross Small Hydro 42.9 MW
Net Stora Load 178.9 MW
Total BMPC Load 108.6 MW

Bus - VOLTAGE (KV/PU)
Branch - MW/MVAR
Equipment - MW/MVAR
110.0%RATEA
1.0500V 0.950UV
KV: <=25.000 <=69.000 <=138.000 <=230.000 <=345.000 >345.000

Figure ___

NSX 292.5 MW
CBX 779.9 MW
ONI 1036.4 MW
ONS 698.6 MW

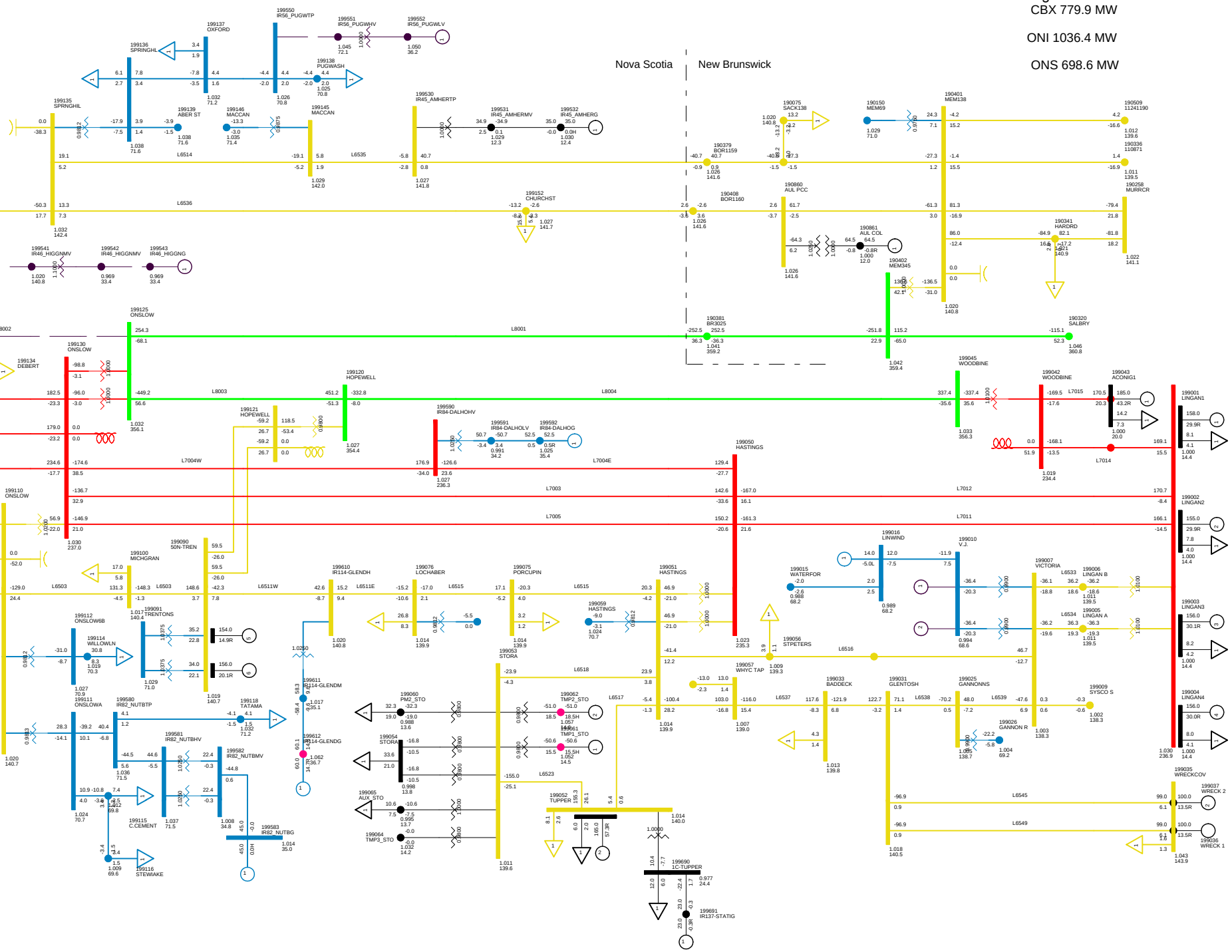

2013 SUMMER PEAK NS EXPORT 300 MW
C03 LOSE L8002
NORTHEASTERN NS TUE, DEC 09 2008 23:06

Total Wind Gen: 290.1 MW | Gross Tupper 165.0 MW | Gross Wreck Cove 200.0 MW | Net Stora Load 178.9 MW
Gross Lingan 625.0 MW | Gross Trenton 310.0 MW | Gross Gas Turbine 0.0 MW | Total BMPC Load 108.6 MW
Gross Pt Aconi 185.0 MW | Gross Tuft's Cove 229.2 MW | Gross Small Hydro 42.9 MW

Bus - VOLTAGE (KV/PU)
Branch - MW/MVAR
Equipment - MW/MVAR
110.0%RATEA
1.050OV 0.950UV
KV: <=25.000 <=69.000 <=138.000 <=230.000 <=345.000 >345.000

Figure ___

NSX 32.5 MW
CBX 500.2 MW
ONI 769.1 MW
ONS 691.6 MW

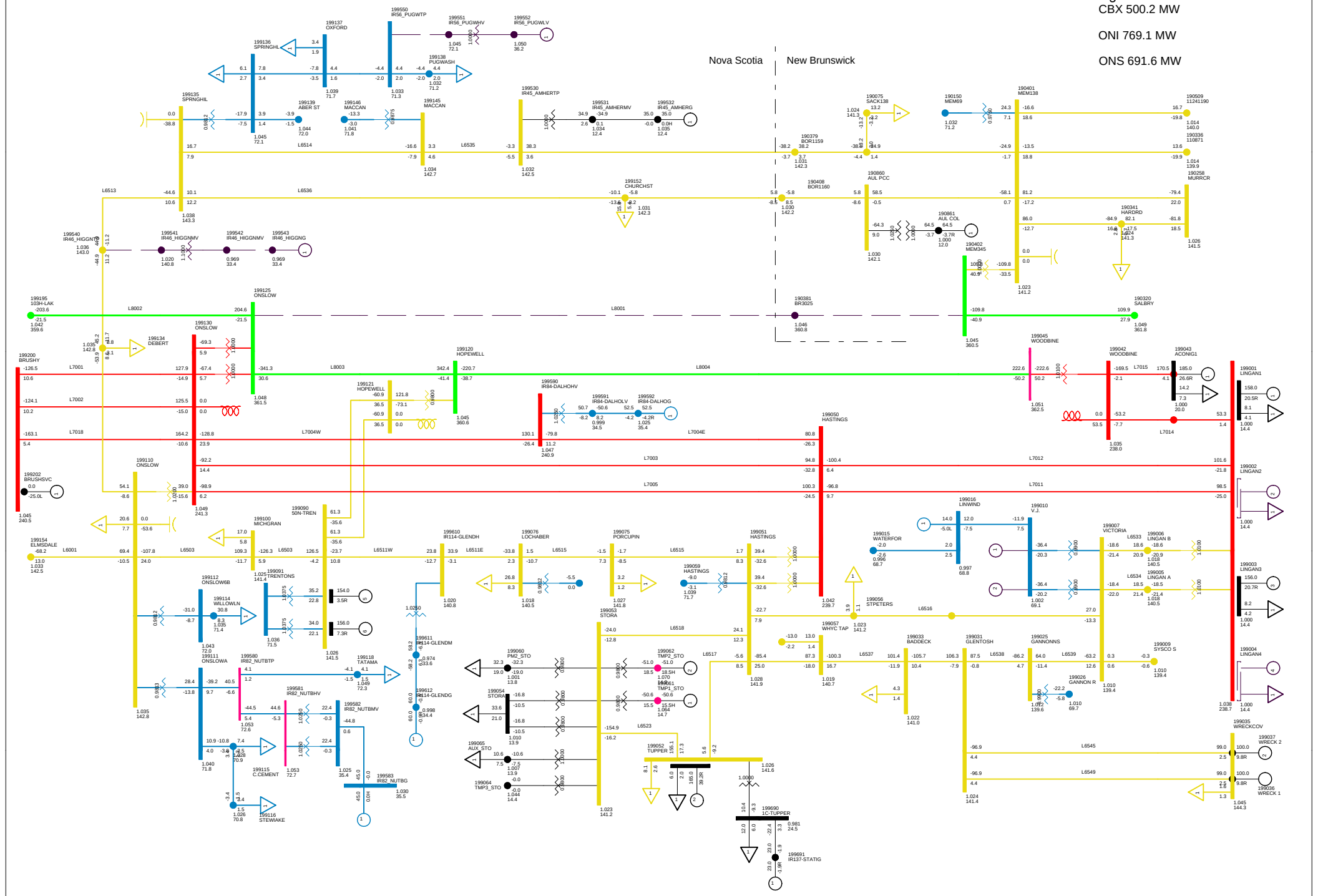

2013 SUMMER PEAK NS EXPORT 300 MW
C04SS LOSE L8001 SPS TRIPS 2 LINGAN UNIT
NORTHEASTERN NS TUE, DEC 09 2008 23:07

Total Wind Gen: 290.1 MW | Gross Tupper 165.0 MW | Gross Wreck Cove 200.0 MW | Net Stora Load 178.9 MW
Gross Lingan 314.0 MW | Gross Trenton 310.0 MW | Gross Gas Turbine 0.0 MW | Total BMPC Load 108.6 MW
Gross Pt Aconi 185.0 MW | Gross Tuft's Cove 229.2 MW | Gross Small Hydro 42.9 MW

Bus - VOLTAGE (KV/PU)
Branch - MW/MVAR
Equipment - MW/MVAR
110.0%RATEA
1.0500V 0.950UV
KV: <=25.000 <=69.000 <=138.000 <=230.000 <=345.000 >345.000

Figure ___

NSX 299.9 MW

CBX 780.3 MW

ONI 1037.4 MW

ONS 692.0 MW

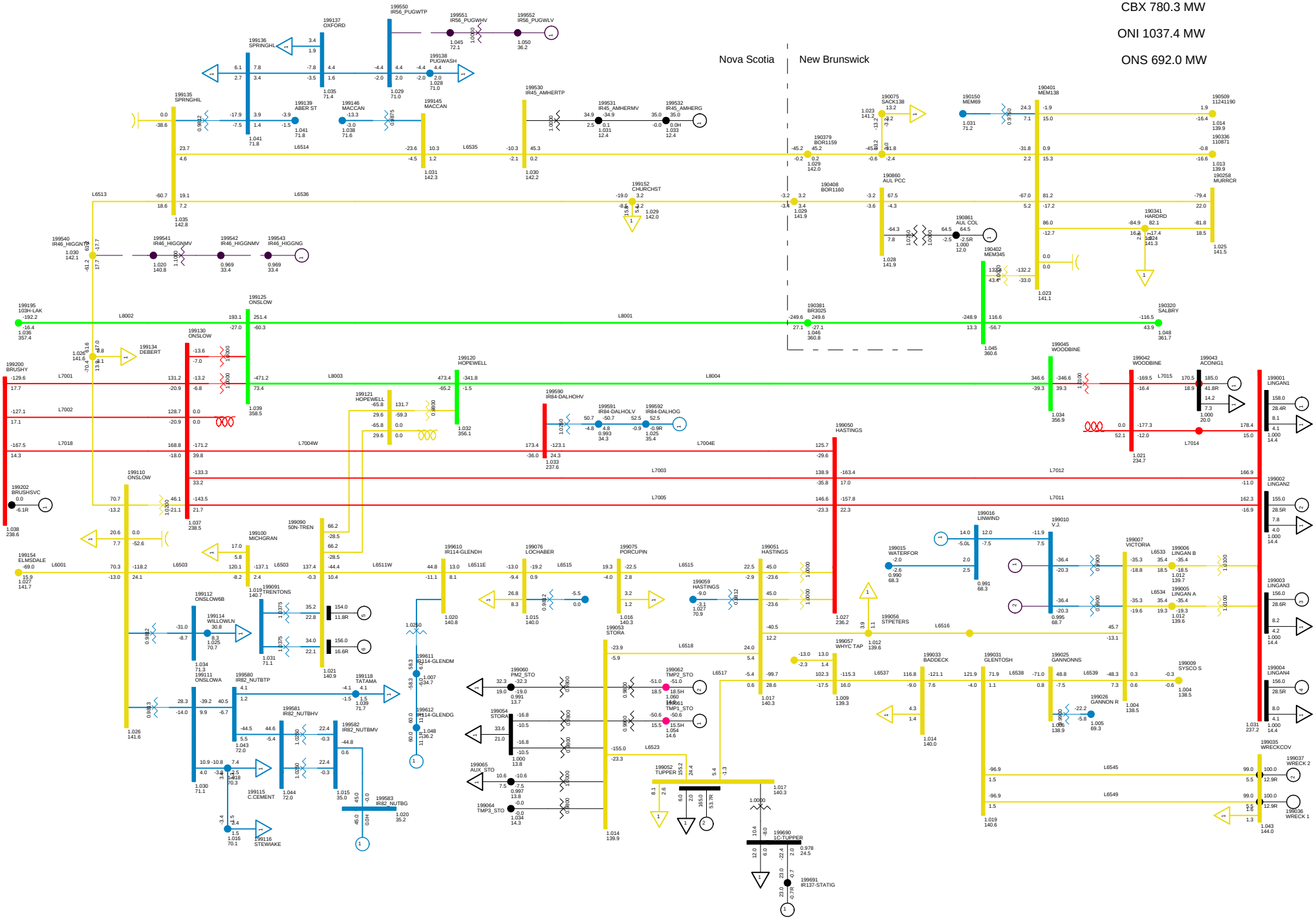

2010 SUMMER PEAK, NSLOAD=1700
NS-NB=+300; NB-NE=1000; CBX=780; ONI=1037 ONS=692
NORTHEASTERN NS TUE, DEC 09 2008 23:07

Total Wind Gen: 290.1 MW
Gross Lingan 625.0 MW
Gross Pt Aconi 185.0 MW
Gross Tupper 165.0 MW
Gross Trenton 310.0 MW
Gross Tuft's Cove 229.2 MW
Gross Wreck Cove 200.0 MW
Gross Gas Turbine 0.0 MW
Gross Small Hydro 42.9 MW
Net Stora Load 178.9 MW
Total BMPC Load 108.6 MW

Bus - VOLTAGE (KV/PU)
Branch - MW/MVAR
Equipment - MW/MVAR
110.0%RATEA
1.050OV 0.950UV
KV: <=25.000 <=69.000 <=138.000 <=230.000 <=345.000 >345.000

Figure ___

NSX 294.6 MW
CBX 774.3 MW
ONI 1032.1 MW
ONS 692.0 MW

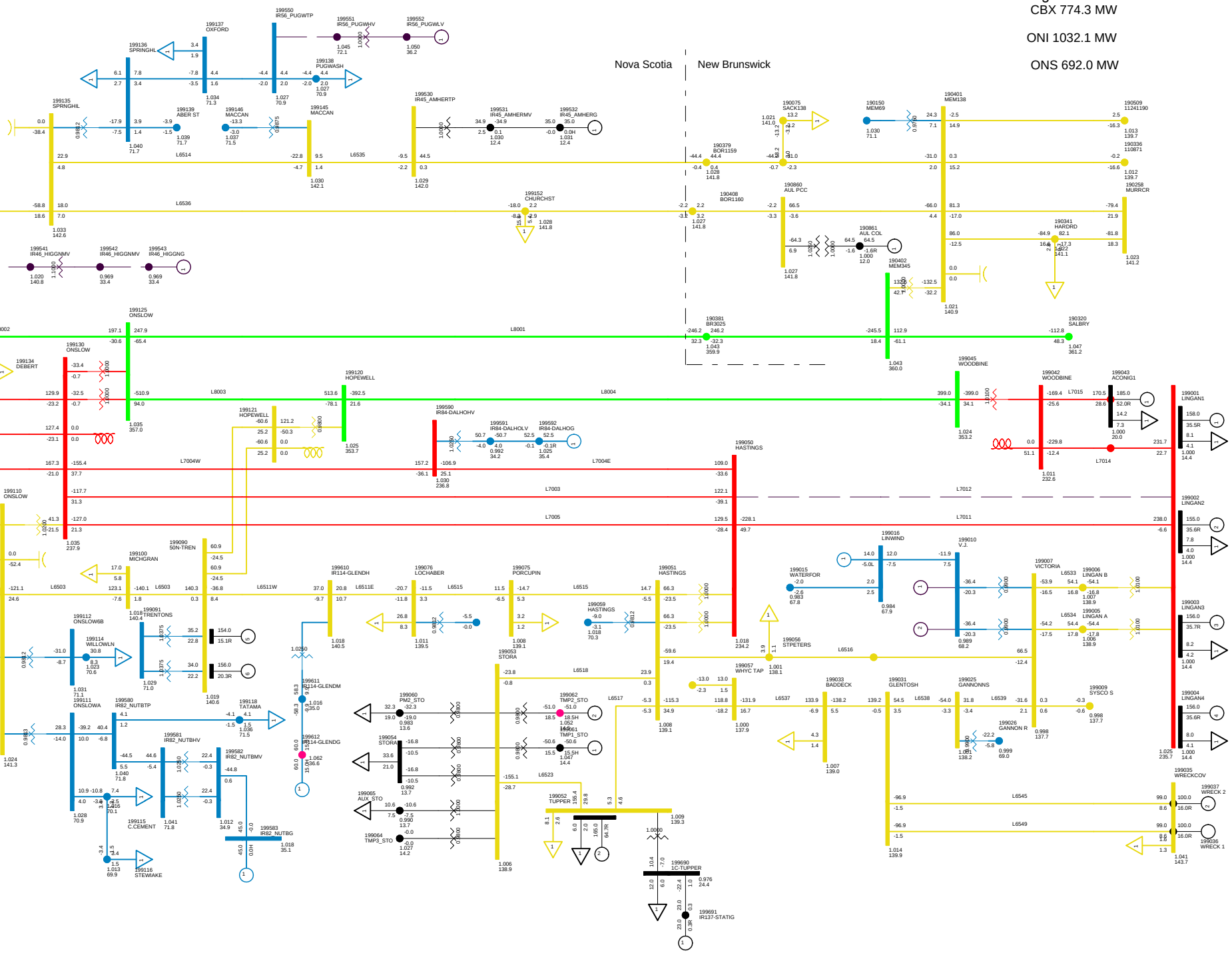

2013 SUMMER PEAK NS EXPORT 300 MW
C05 LOSE L7012 NO SPS
NORTHEASTERN NS TUE, DEC 09 2008 23:08

Total Wind Gen: 290.1 MW | Gross Tupper 165.0 MW | Gross Wreck Cove 200.0 MW | Net Stora Load 178.9 MW
Gross Lingan 625.0 MW | Gross Trenton 310.0 MW | Gross Gas Turbine 0.0 MW | Total BMPC Load 108.6 MW
Gross Pt Aconi 185.0 MW | Gross Tuft's Cove 229.2 MW | Gross Small Hydro 42.9 MW

Bus - VOLTAGE (KV/PU)
Branch - MW/MVAR
Equipment - MW/MVAR
110.0%RATEA
1.0500V 0.9500UV
KV: <=25.000 <=69.000 <=138.000 <=230.000 <=345.000 >345.000

Figure ___

NSX 297.2 MW

CBX 777.0 MW

ONI 1034.7 MW

ONS 692.0 MW

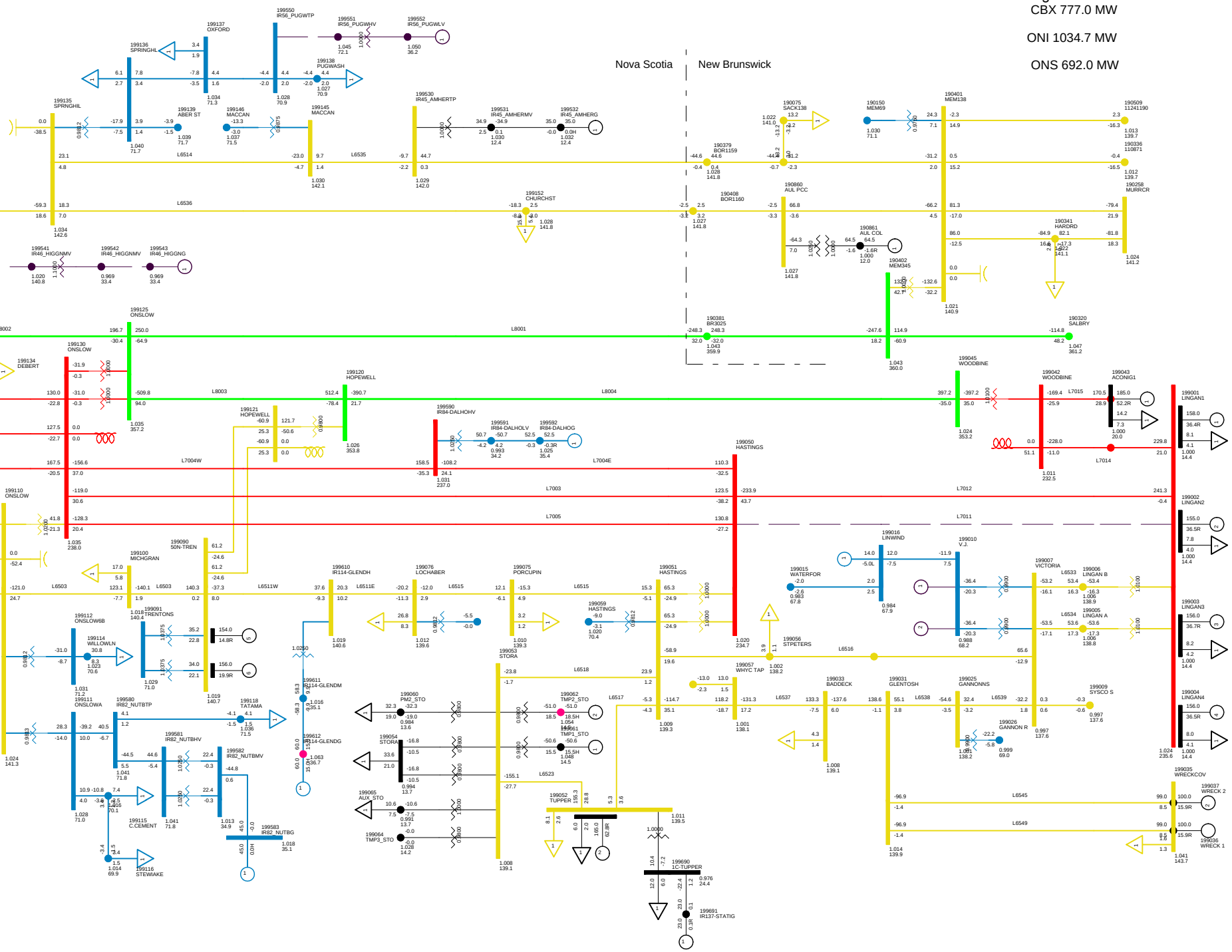

2013 SUMMER PEAK NS EXPORT 300 MW
C06 LOSE L7011
NORTHEASTERN NS TUE, DEC 09 2008 23:08

Total Wind Gen: 290.1 MW
Gross Lingan 625.0 MW
Gross Pt Aconi 185.0 MW
Gross Tupper 165.0 MW
Gross Trenton 310.0 MW
Gross Tuft's Cove 229.2 MW
Gross Wreck Cove 200.0 MW
Gross Gas Turbine 0.0 MW
Gross Small Hydro 42.9 MW
Net Stora Load 178.9 MW
Total BMPC Load 108.6 MW

Bus - VOLTAGE (KV/PU)
Branch - MW/MVAR
Equipment - MW/MVAR
110.0%RATEA
1.0500V 0.950UV
KV: <=25.000 <=69.000 <=138.000 <=230.000 <=345.000 >345.000

Figure ___

NSX 292.9 MW
CBX 781.3 MW
ONI 1030.6 MW
ONS 692.1 MW

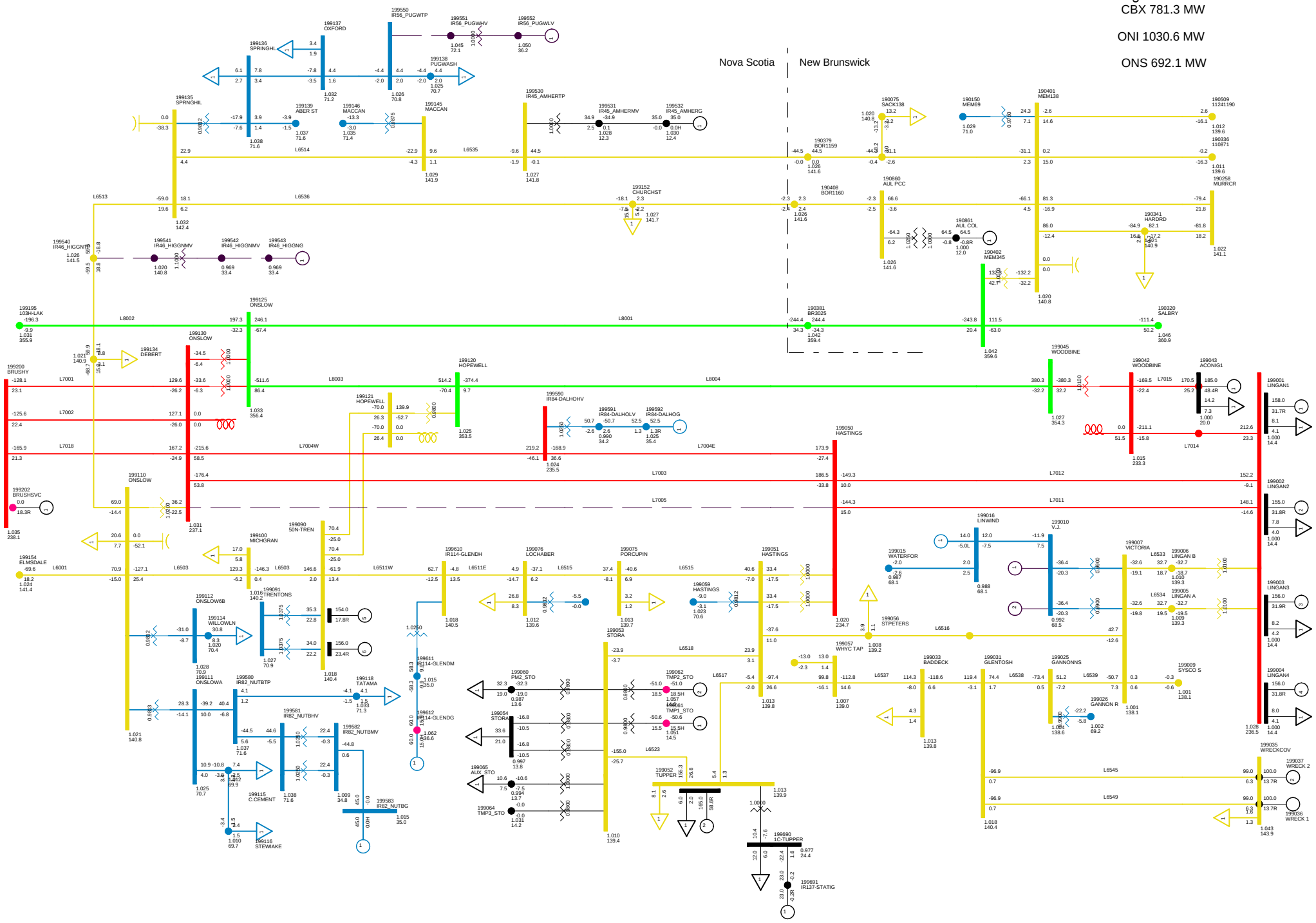

2013 SUMMER PEAK NS EXPORT 300 MW
C07 LOSE L7005
NORTHEASTERN NS TUE, DEC 09 2008 23:08

Total Wind Gen: 290.1 MW | Gross Tupper 165.0 MW | Gross Wreck Cove 200.0 MW | Net Stora Load 178.9 MW
Gross Lingan 625.0 MW | Gross Trenton 310.0 MW | Gross Gas Turbine 0.0 MW | Total BMPC Load 108.6 MW
Gross Pt Aconi 185.0 MW | Gross Tuft's Cove 229.2 MW | Gross Small Hydro 42.9 MW

Bus - VOLTAGE (KV/PU)
Branch - MW/MVAR
Equipment - MW/MVAR
110.0%RATEA
1.050OV 0.950UV
KV: <=25.000 <=69.000 <=138.000 <=230.000 <=345.000 >345.000

Figure ___

NSX 296.4 MW
CBX 780.3 MW
ONI 1037.4 MW
ONS 695.5 MW

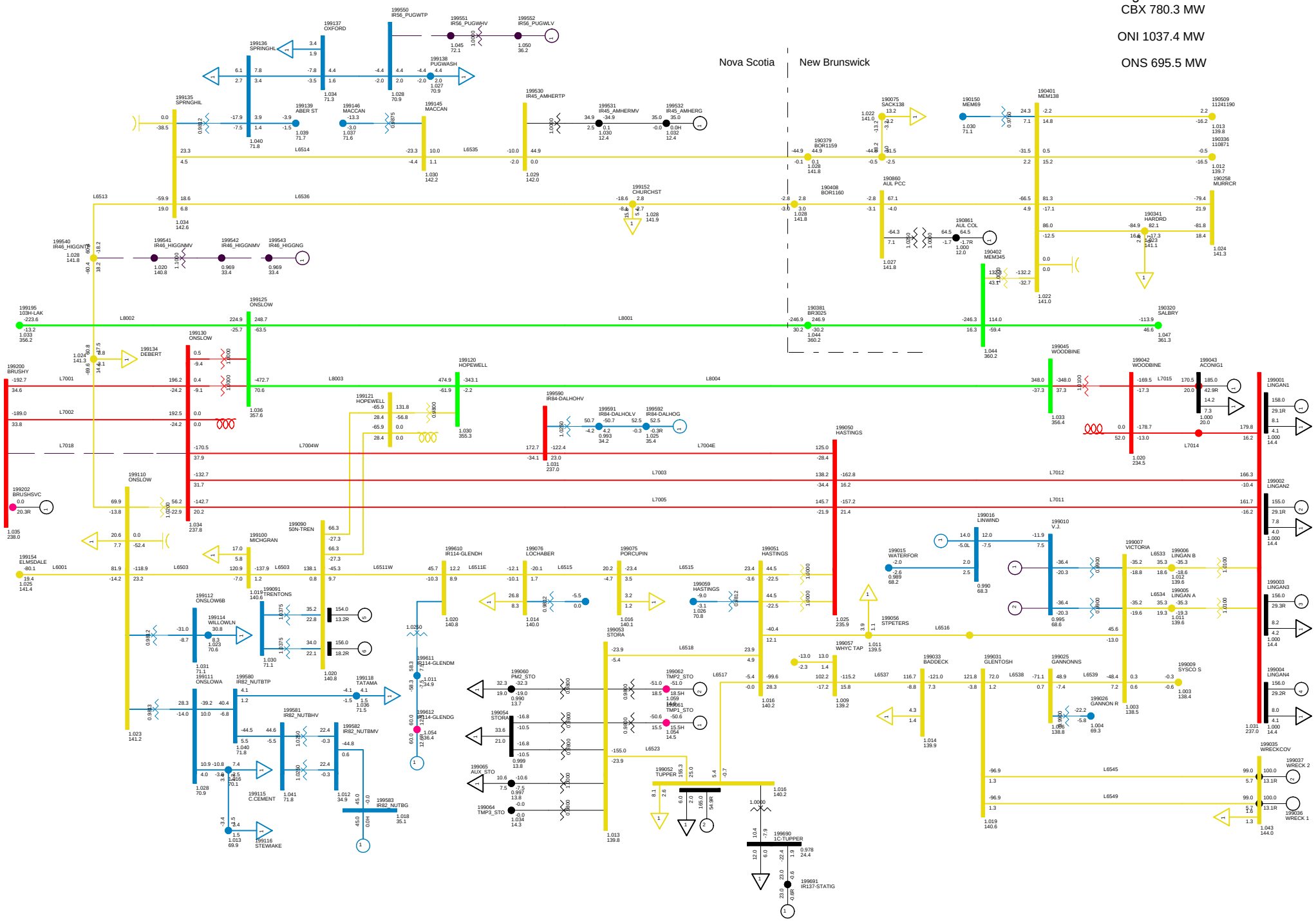

2013 SUMMER PEAK NS EXPORT 300 MW
C08 LOSE L7018
NORTHEASTERN NS TUE, DEC 09 2008 23:08

Total Wind Gen: 290.1 MW | Gross Tupper 165.0 MW | Gross Wreck Cove 200.0 MW | Net Stora Load 178.9 MW
Gross Lingan 625.0 MW | Gross Trenton 310.0 MW | Gross Gas Turbine 0.0 MW | Total BMPC Load 108.6 MW
Gross Pt Aconi 185.0 MW | Gross Tuft's Cove 229.2 MW | Gross Small Hydro 42.9 MW

Bus - VOLTAGE (KV/PU)
Branch - MW/MVAR
Equipment - MW/MVAR
110.0%RATEA
1.050OV 0.950UV
KV: <=25.000 <=69.000 <=138.000 <=230.000 <=345.000 >345.000

Figure ___

Total Wind Gen: 290.1 MW | Gross Tupper 165.0 MW | Gross Wreck Cove 200.0 MW

Gross Lingan 625.0 MW | Gross Trenton 310.0 MW | Gross Gas Turbine 0.0 MW

Gross Pt Aconi 185.0 MW | Gross Tuft's Cove 229.2 MW | Gross Small Hydro 42.9 MW

Net Stora Load 178.9 MW | Total BMPC Load 108.6 MW

NSX 298.4 MW

CBX 780.3 MW

ONI 1037.3 MW

ONS 693.3 MW

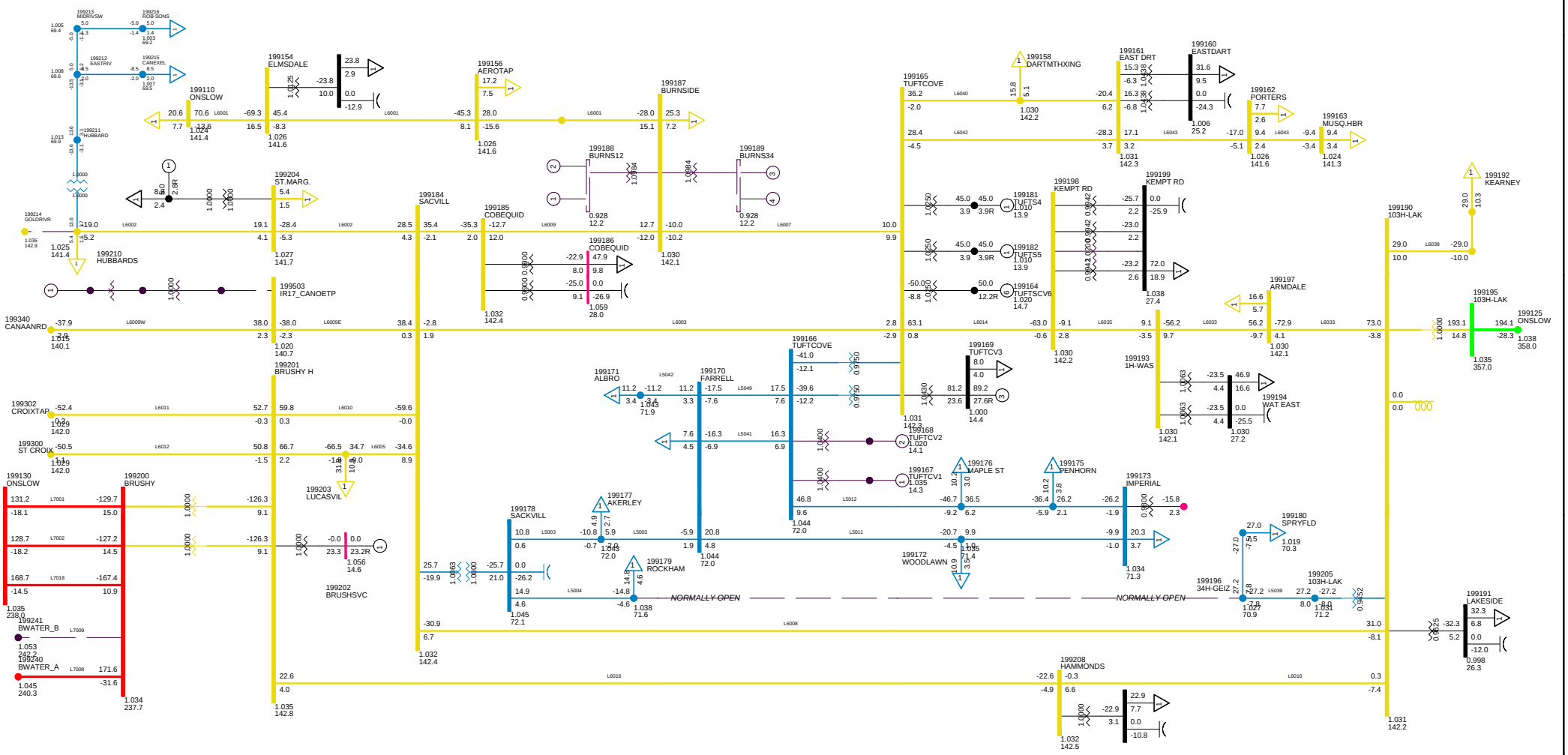

2013 SUMMER PEAK NS EXPORT 300 MW
C09 LOSE L7009
METRO ZONE TUE, DEC 09 2008 23:09

Bus - VOLTAGE (KV/PU)
Branch - MW/MVAR
Equipment - MW/MVAR
100.0%RATEA
1.050OV 0.950UV
KV: <=30.000 <=69.000 <=138.000 <=230.000 <=345.000 >345.000

Figure __

NSX 293.7 MW
CBX 781.4 MW
ONI 1031.3 MW
ONS 692.1 MW

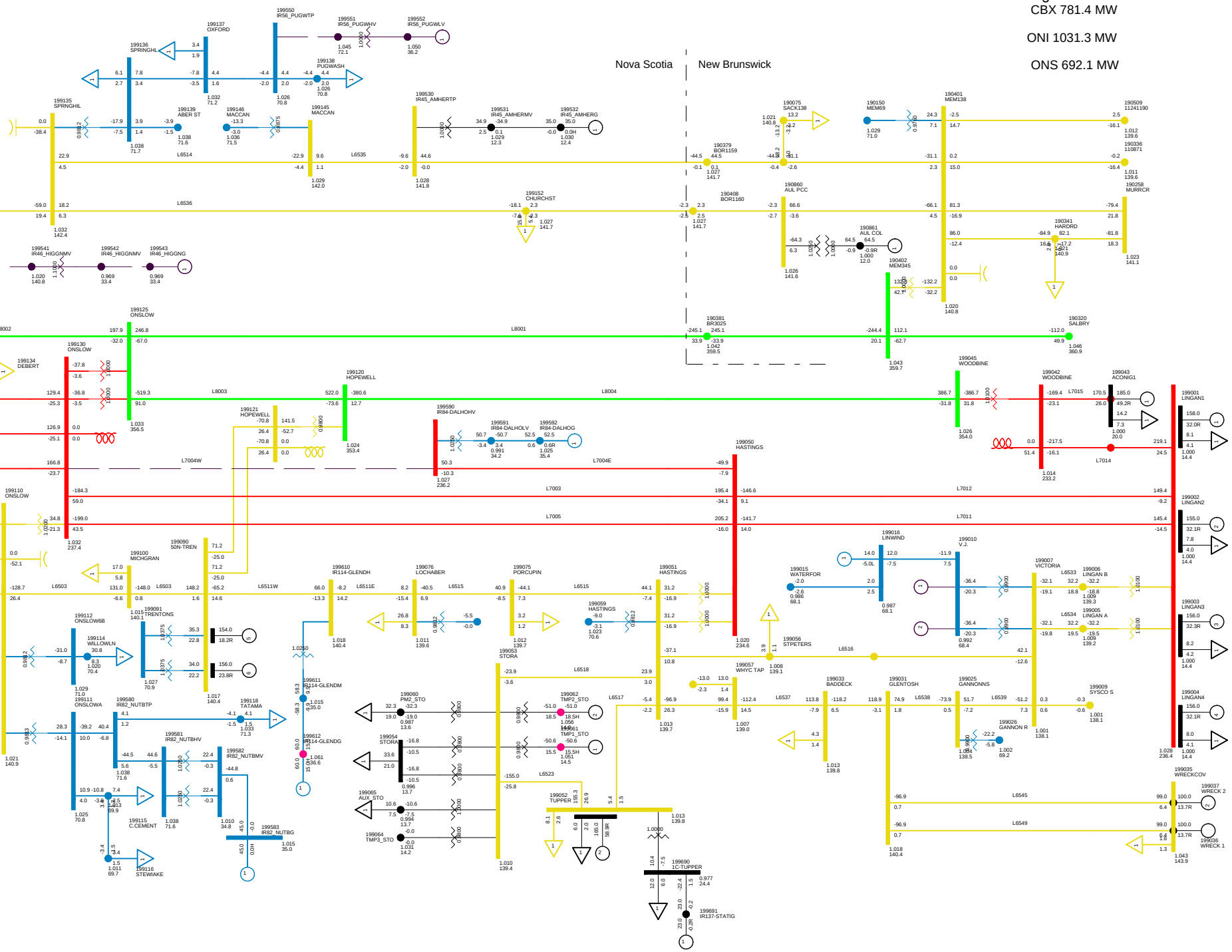

2013 SUMMER PEAK NS EXPORT 300 MW
C10 LOSE L7004 WEST
NORTHEASTERN NS TUE, DEC 09 2008 23:09

Total Wind Gen: 290.1 MW | Gross Tupper 165.0 MW | Gross Wreck Cove 200.0 MW | Net Stora Load 178.9 MW
Gross Lingan 625.0 MW | Gross Trenton 310.0 MW | Gross Gas Turbine 0.0 MW | Total BMPC Load 108.6 MW
Gross Pt Aconi 185.0 MW | Gross Tuft's Cove 229.2 MW | Gross Small Hydro 42.9 MW

Bus - VOLTAGE (KV/PU)
Branch - MW/MVAR
Equipment - MW/MVAR
110.0%RATEA
1.050OV 0.950UV
KV: <=25.000 <=69.000 <=138.000 <=230.000 <=345.000 >345.000

Figure ___

NSX 281.3 MW
CBX 769.7 MW
ONI 1019.2 MW
ONS 692.3 MW

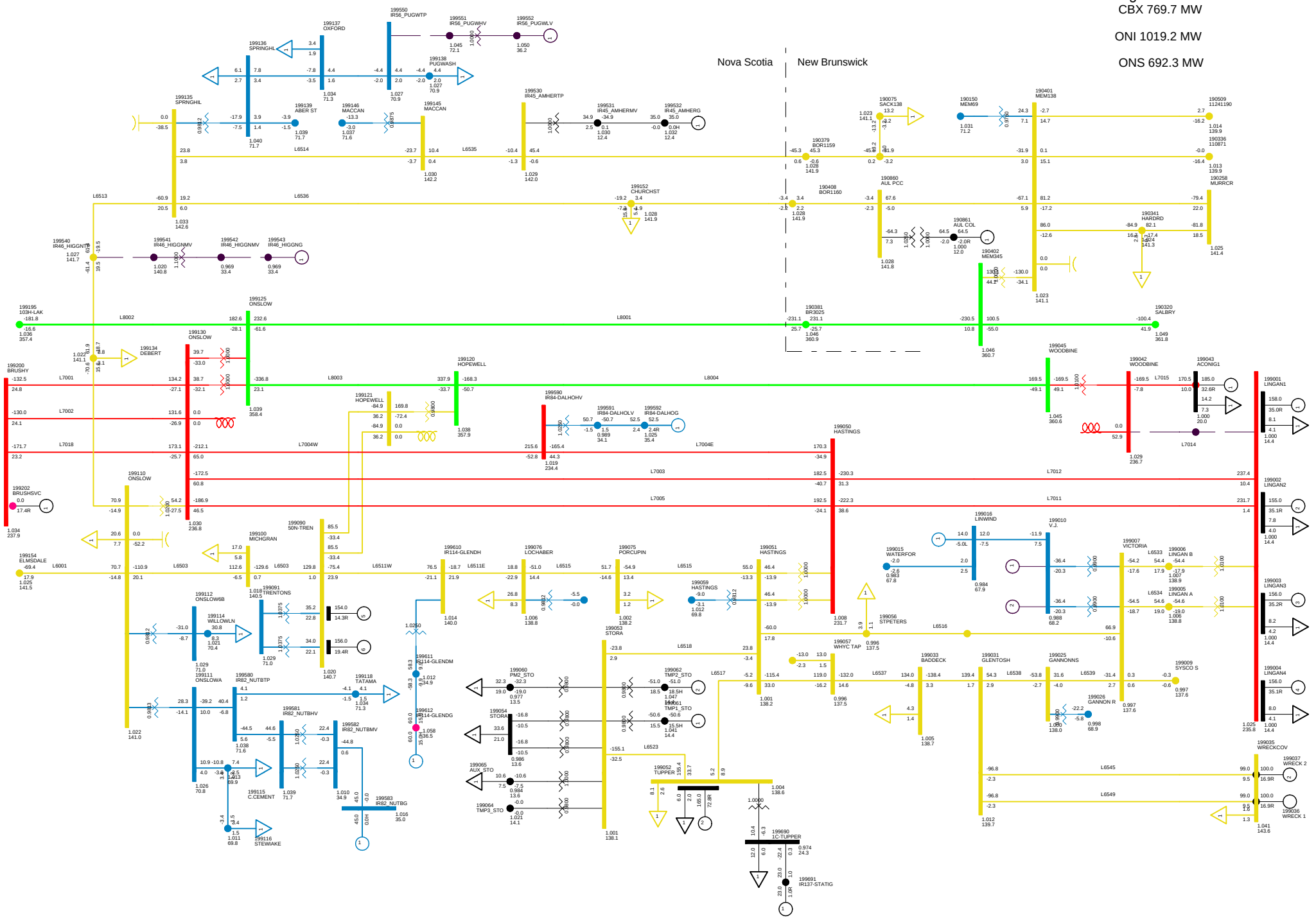

2013 SUMMER PEAK NS EXPORT 300 MW
C11 LOSE L7014
NORTHEASTERN NS TUE, DEC 09 2008 23:09

Total Wind Gen: 290.1 MW | Gross Tupper 165.0 MW | Gross Wreck Cove 200.0 MW | Net Stora Load 178.9 MW
Gross Lingan 625.0 MW | Gross Trenton 310.0 MW | Gross Gas Turbine 0.0 MW | Total BMPC Load 108.6 MW
Gross Pt Aconi 185.0 MW | Gross Tuft's Cove 229.2 MW | Gross Small Hydro 42.9 MW

Bus - VOLTAGE (KV/PU)
Branch - MW/MVAR
Equipment - MW/MVAR
110.0%RATEA
1.050UV 0.950UV
KV: <=25.000 <=69.000 <=138.000 <=230.000 <=345.000 >345.000

Figure ___

NSX 299.9 MW

CBX 780.3 MW

ONI 1037.4 MW

ONS 692.0 MW

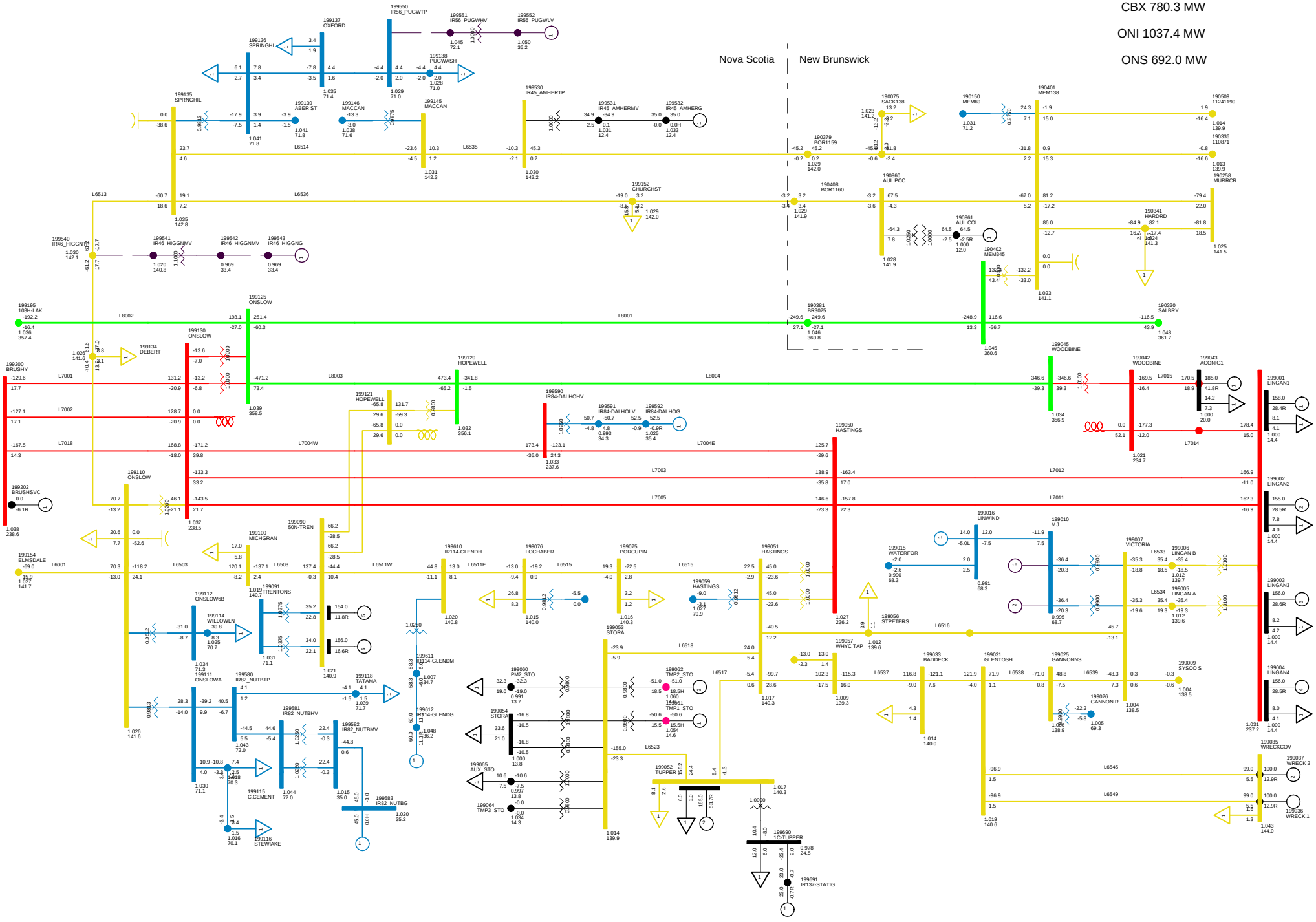

2010 SUMMER PEAK, NSLOAD=1700
NS-NB=+300; NB-NE=1000; CBX=780; ONI=1037 ONS=692
NORTHEASTERN NS TUE, DEC 09 2008 23:09

Total Wind Gen: 290.1 MW
Gross Lingan 625.0 MW
Gross Pt Aconi 185.0 MW
Gross Tupper 165.0 MW
Gross Trenton 310.0 MW
Gross Tuft's Cove 229.2 MW
Gross Wreck Cove 200.0 MW
Gross Gas Turbine 0.0 MW
Gross Small Hydro 42.9 MW
Net Stora Load 178.9 MW
Total BMPC Load 108.6 MW

Bus - VOLTAGE (KV/PU)
Branch - MW/MVAR
Equipment - MW/MVAR
110.0%RATEA
1.050OV 0.950UV
KV: <=25.000 <=69.000 <=138.000 <=230.000 <=345.000 >345.000

Figure ___

NSX 314.6 MW
CBX 779.9 MW
ONI 1051.6 MW
ONS 691.7 MW

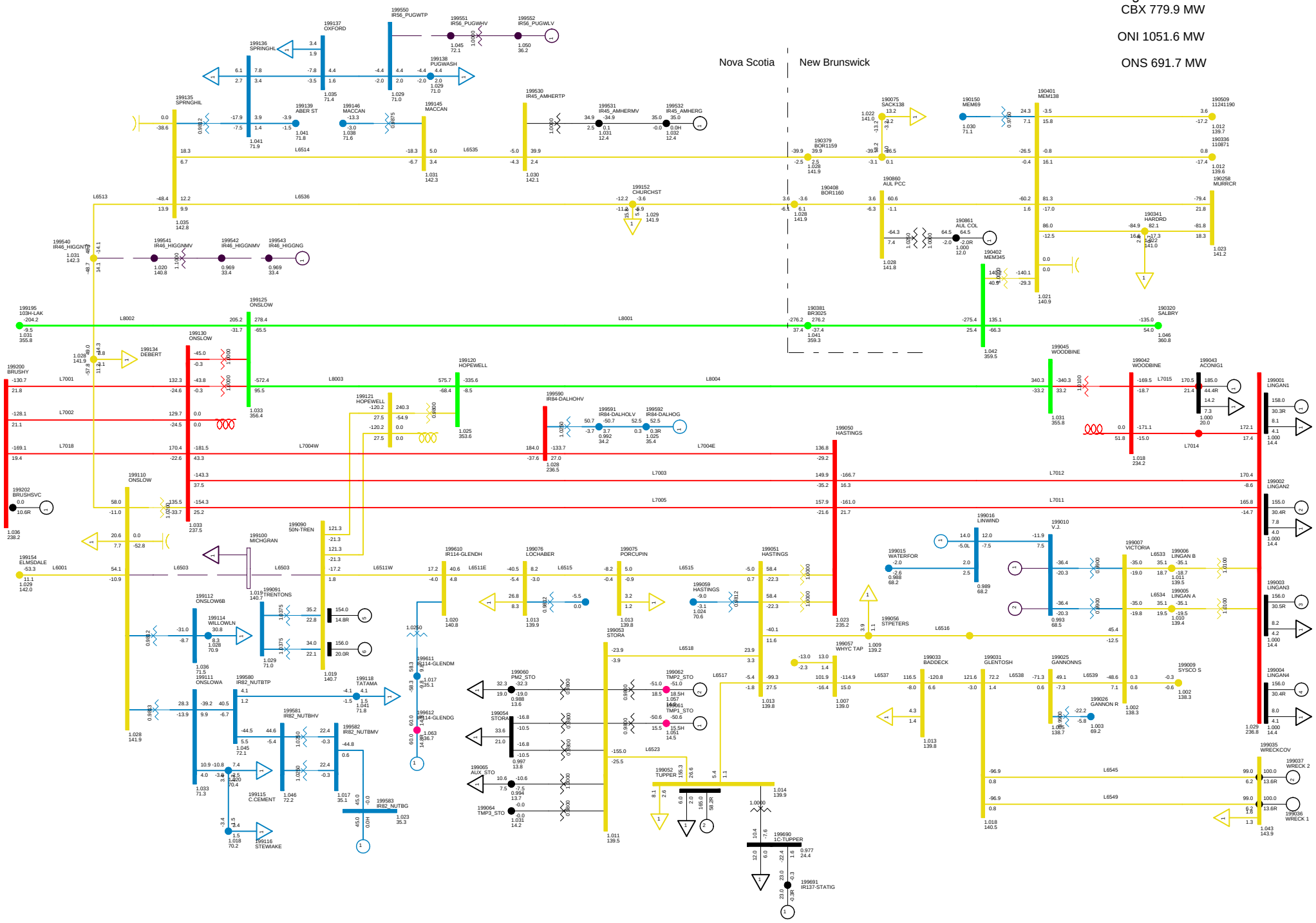

2013 SUMMER PEAK NS EXPORT 300 MW
C12 LOSE 6503
NORTHEASTERN NS TUE, DEC 09 2008 23:09

Total Wind Gen: 290.1 MW | Gross Tupper 165.0 MW | Gross Wreck Cove 200.0 MW | Net Stora Load 178.9 MW
Gross Lingan 625.0 MW | Gross Trenton 310.0 MW | Gross Gas Turbine 0.0 MW | Total BMPC Load 108.6 MW
Gross Pt Aconi 185.0 MW | Gross Tuft's Cove 229.2 MW | Gross Small Hydro 42.9 MW

Bus - VOLTAGE (KV/PU)
Branch - MW/MVAR
Equipment - MW/MVAR
110.0%RATEA
1.0500V 0.950UV
KV: <=25.000 <=69.000 <=138.000 <=230.000 <=345.000 >345.000

Figure ___

NSX 302.7 MW
CBX 780.5 MW
ONI 1040.2 MW
ONS 692.0 MW

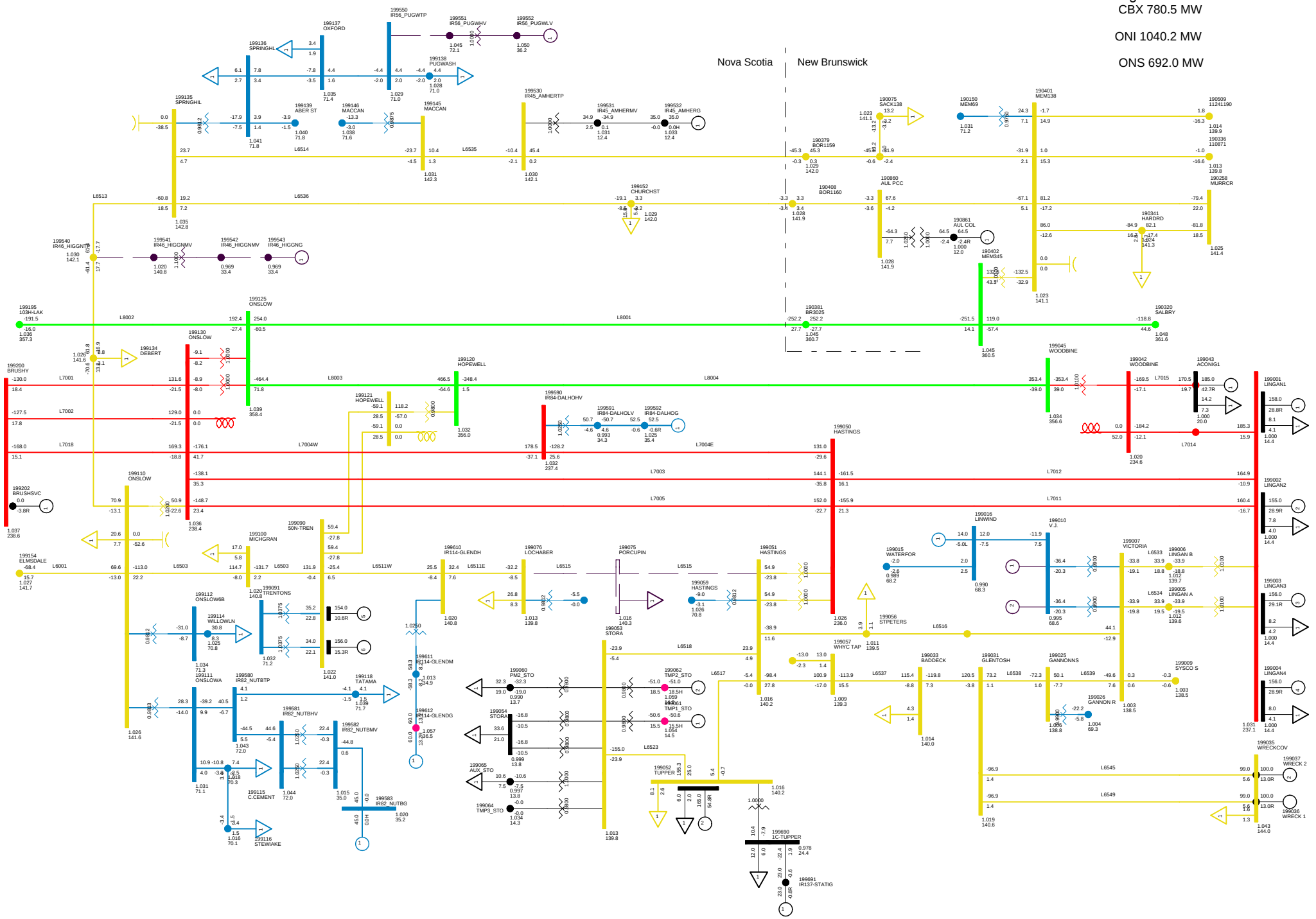

2013 SUMMER PEAK NS EXPORT 300 MW
C13 LOSE L6511
NORTHEASTERN NS TUE, DEC 09 2008 23:09

Total Wind Gen: 290.1 MW
Gross Lingan 625.0 MW
Gross Pt Aconi 185.0 MW
Gross Tupper 165.0 MW
Gross Trenton 310.0 MW
Gross Tuft's Cove 229.2 MW
Gross Wreck Cove 200.0 MW
Gross Gas Turbine 0.0 MW
Gross Small Hydro 42.9 MW
Net Stora Load 178.9 MW
Total BMPC Load 108.6 MW

Bus - VOLTAGE (KV/PU)
Branch - MW/MVAR
Equipment - MW/MVAR
110.0%RATEA
1.0500V 0.950UV
KV: <=25.000 <=69.000 <=138.000 <=230.000 <=345.000 >345.000

Figure ___

NSX 299.5 MW
CBX 780.1 MW
ONI 1037.0 MW
ONS 692.0 MW

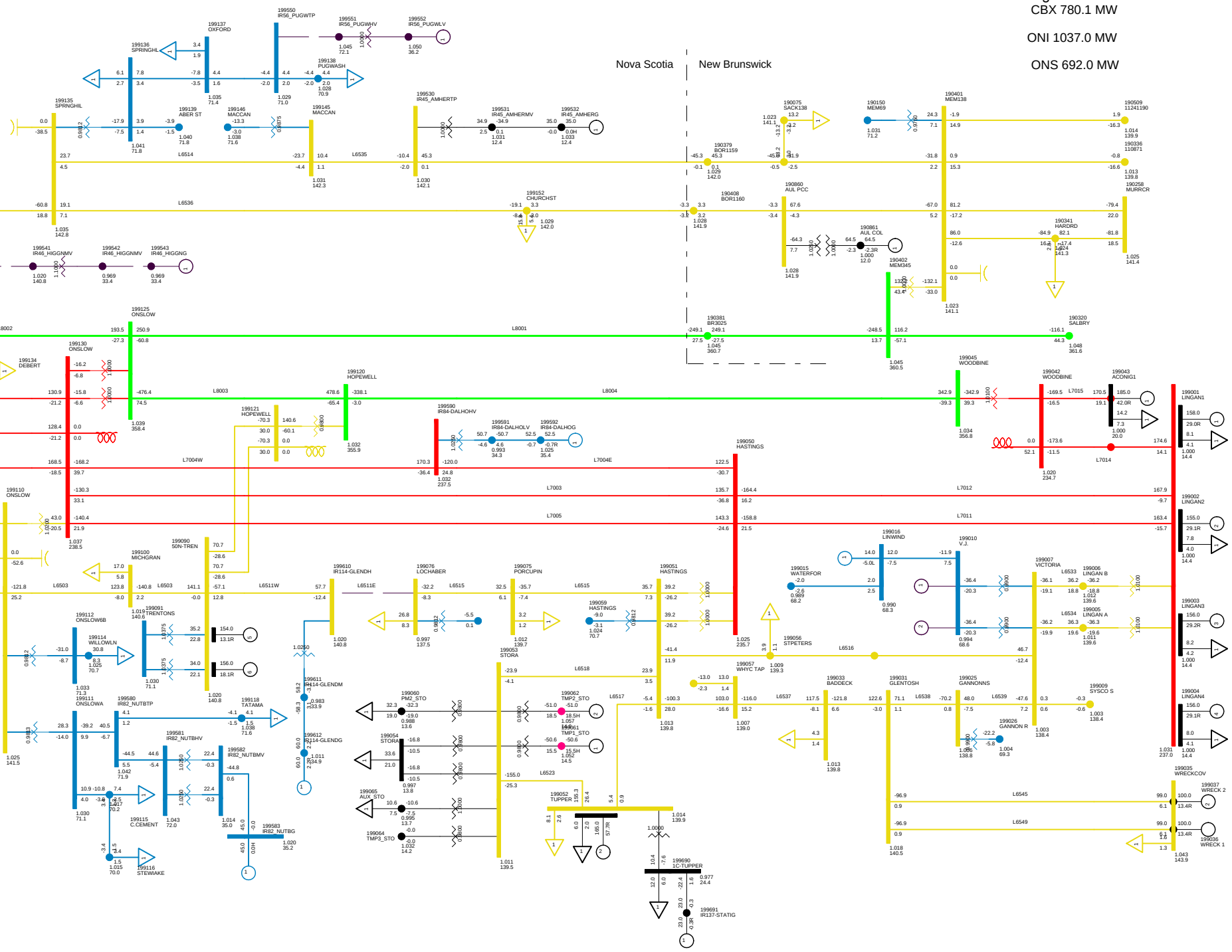

2013 SUMMER PEAK NS EXPORT 300 MW
C14 LOSE L6511E
NORTHEASTERN NS TUE, DEC 09 2008 23:10

Total Wind Gen: 290.1 MW | Gross Tupper 165.0 MW | Gross Wreck Cove 200.0 MW | Net Stora Load 178.9 MW
Gross Lingan 625.0 MW | Gross Trenton 310.0 MW | Gross Gas Turbine 0.0 MW | Total BMPC Load 108.6 MW
Gross Pt Aconi 185.0 MW | Gross Tuft's Cove 229.2 MW | Gross Small Hydro 42.9 MW

Bus - VOLTAGE (KV/PU)
Branch - MW/MVAR
Equipment - MW/MVAR
110.0%RATEA
1.0500V 0.950UV
KV: <=25.000 <=69.000 <=138.000 <=230.000 <=345.000 >345.000

Figure ___

NSX 298.8 MW
CBX 780.8 MW
ONI 1036.3 MW
ONS 692.0 MW

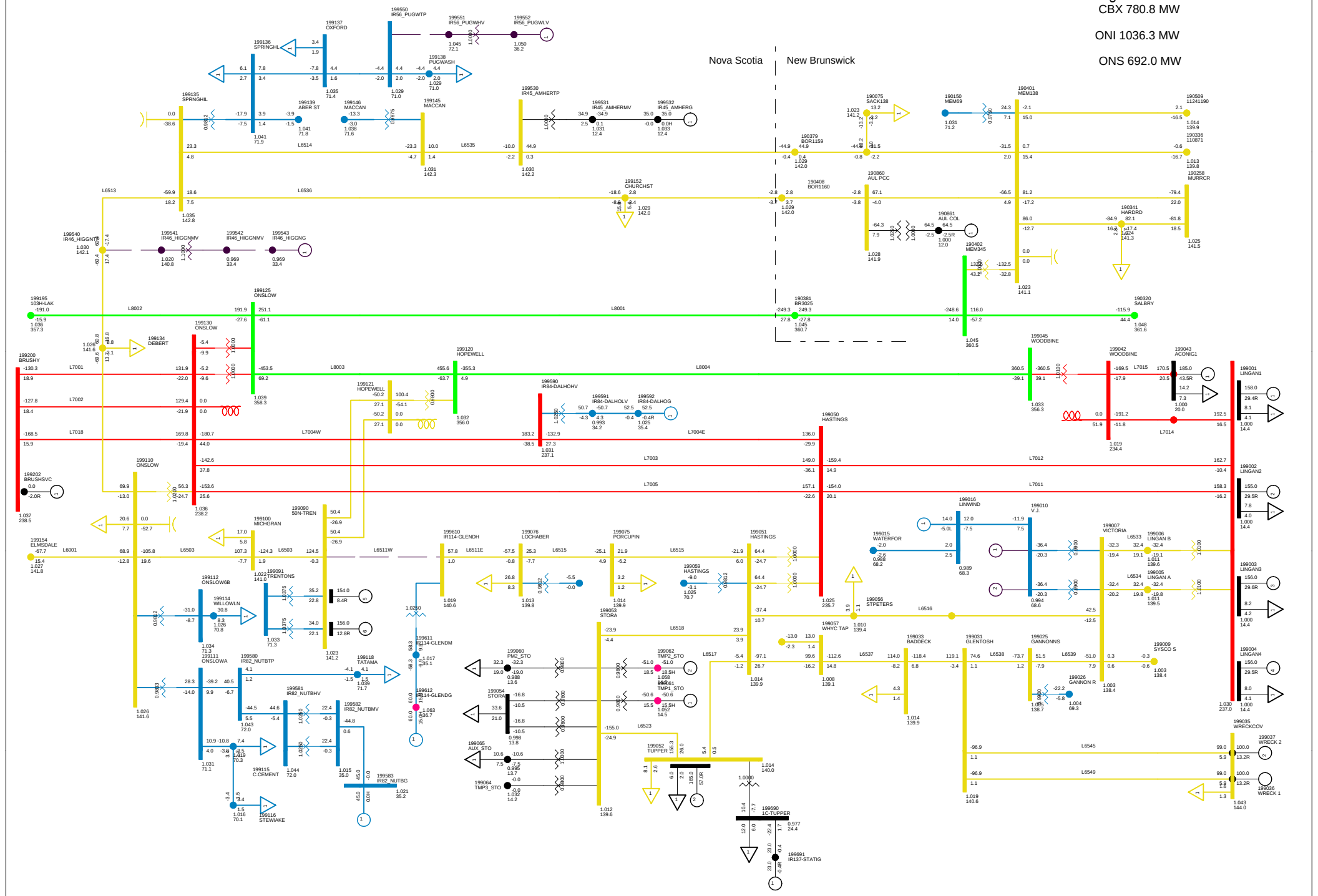

2013 SUMMER PEAK NS EXPORT 300 MW
C15 LOSE L6511W
NORTHEASTERN NS TUE, DEC 09 2008 23:10

Total Wind Gen: 290.1 MW | Gross Tupper 165.0 MW | Gross Wreck Cove 200.0 MW | Net Stora Load 178.9 MW
Gross Lingan 625.0 MW | Gross Trenton 310.0 MW | Gross Gas Turbine 0.0 MW | Total BMPC Load 108.6 MW
Gross Pt Aconi 185.0 MW | Gross Tuft's Cove 229.2 MW | Gross Small Hydro 42.9 MW

Bus - VOLTAGE (KV/PU)
Branch - MW/MVAR
Equipment - MW/MVAR
110.0%RATEA
1.0500V 0.950UV
KV: <=25.000 <=69.000 <=138.000 <=230.000 <=345.000 >345.000

Figure ___

NSX 309.7 MW
CBX 780.4 MW
ONI 1037.6 MW
ONS 692.3 MW

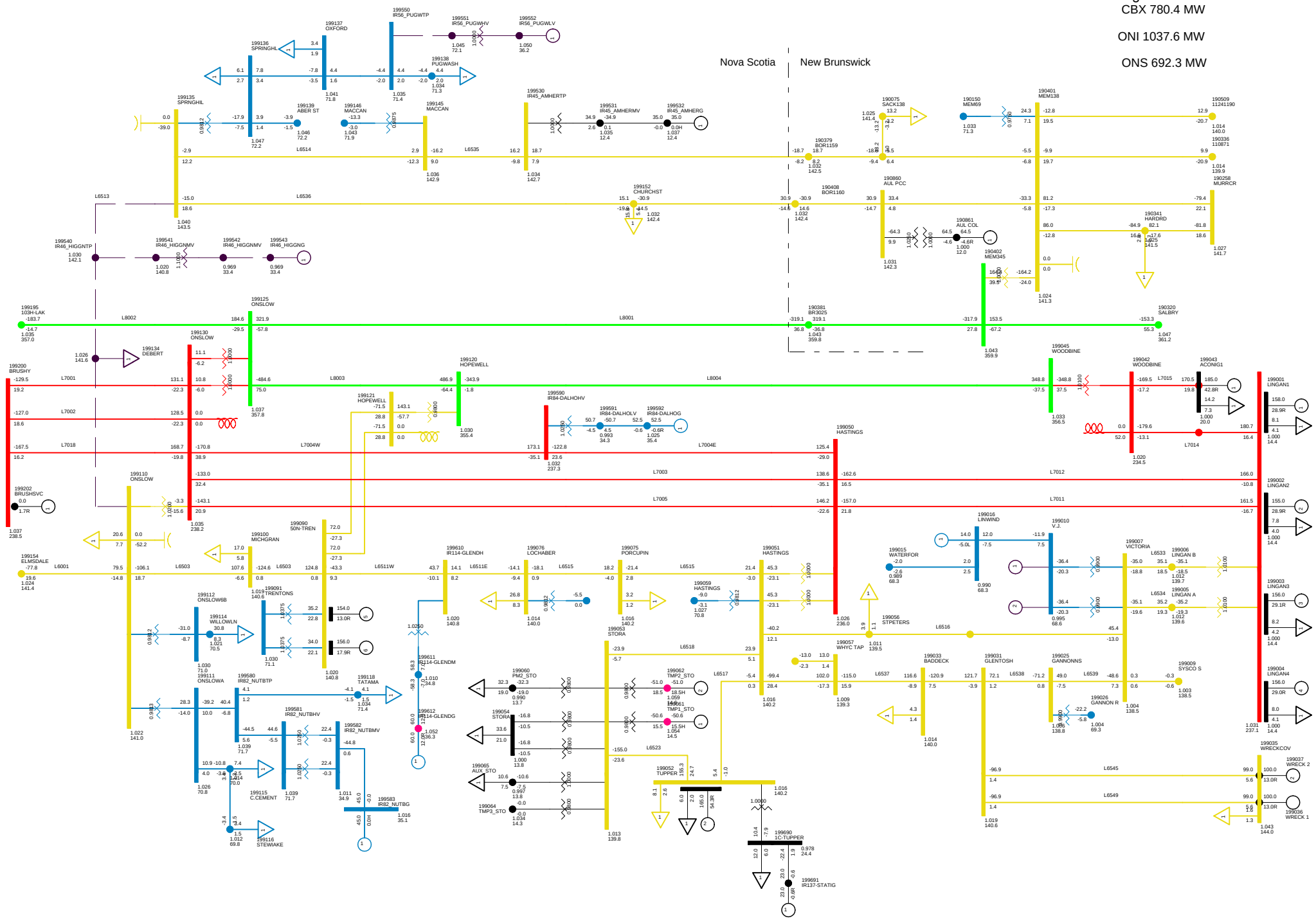

2013 SUMMER PEAK NS EXPORT 300 MW
C16 LOSE L6513
NORTHEASTERN NS TUE, DEC 09 2008 23:10

Total Wind Gen: 290.1 MW | Gross Tupper 165.0 MW | Gross Wreck Cove 200.0 MW | Net Stora Load 178.9 MW
Gross Lingan 625.0 MW | Gross Trenton 310.0 MW | Gross Gas Turbine 0.0 MW | Total BMPC Load 108.6 MW
Gross Pt Aconi 185.0 MW | Gross Tuft's Cove 229.2 MW | Gross Small Hydro 42.9 MW

Bus - VOLTAGE (KV/PU)
Branch - MW/MVAR
Equipment - MW/MVAR
110.0%RATEA
1.0500V 0.950UV
KV: <=25.000 <=69.000 <=138.000 <=230.000 <=345.000 >345.000

Figure ___

NSX 315.9 MW
CBX 780.3 MW
ONI 1037.4 MW
ONS 692.0 MW

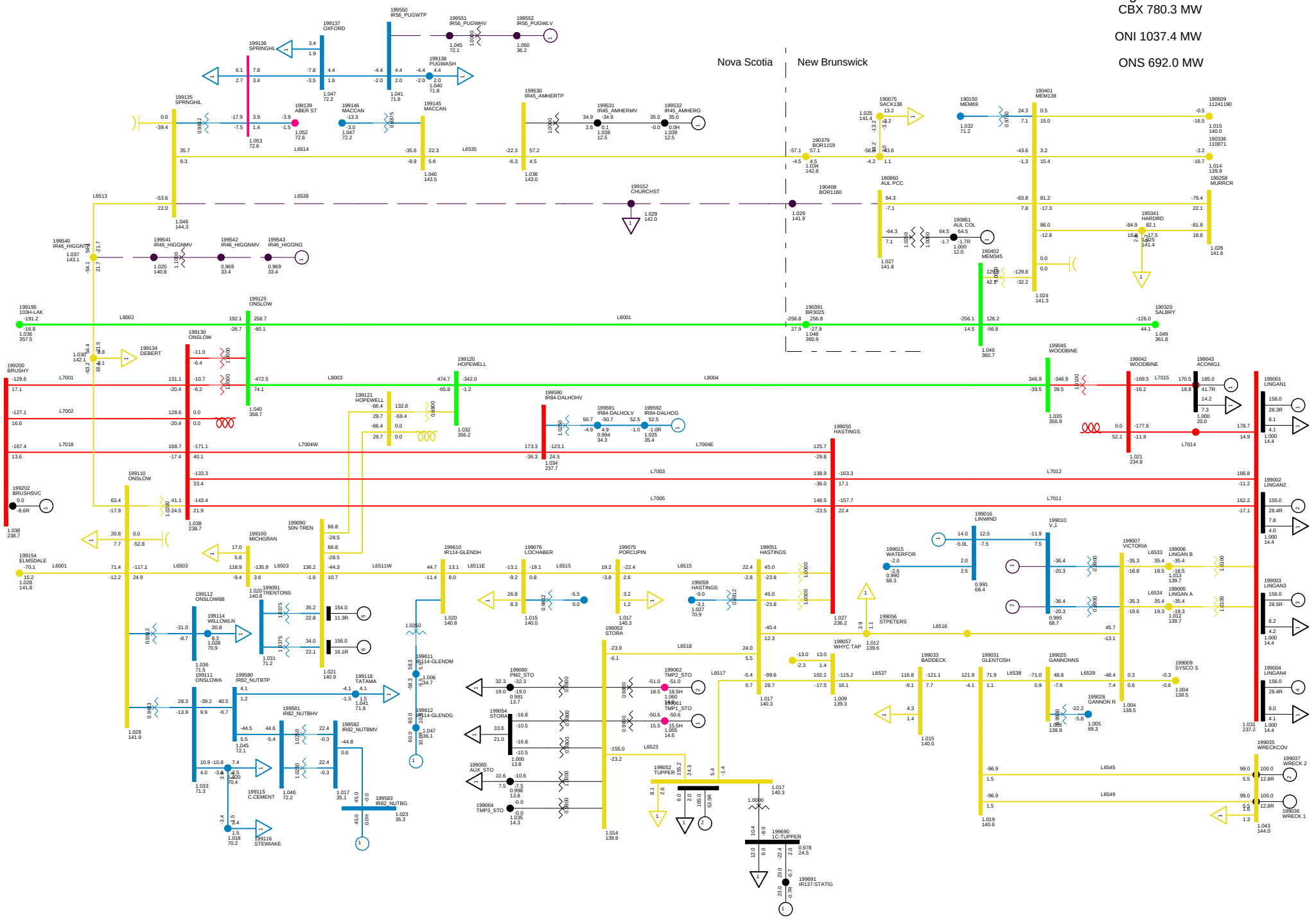

2013 SUMMER PEAK NS EXPORT 300 MW
C17 LOSE L6536
NORTHEASTERN NS TUE, DEC 09 2008 23:10

Total Wind Gen: 290.1 MW
Gross Lingan 625.0 MW
Gross Pt Aconi 185.0 MW
Gross Tupper 165.0 MW
Gross Trenton 310.0 MW
Gross Tuft's Cove 229.2 MW
Gross Wreck Cove 200.0 MW
Gross Gas Turbine 0.0 MW
Gross Small Hydro 42.9 MW
Net Stora Load 178.9 MW
Total BMPC Load 108.6 MW

Bus - VOLTAGE (KV/PU)
Branch - MW/MVAR
Equipment - MW/MVAR
110.0%RATEA
1.0500V 0.950UV
KV: <=25.000 <=69.000 <=138.000 <=230.000 <=345.000 >345.000

Figure ___

NSX 300.0 MW

CBX 780.3 MW

ONI 1037.4 MW

ONS 692.0 MW

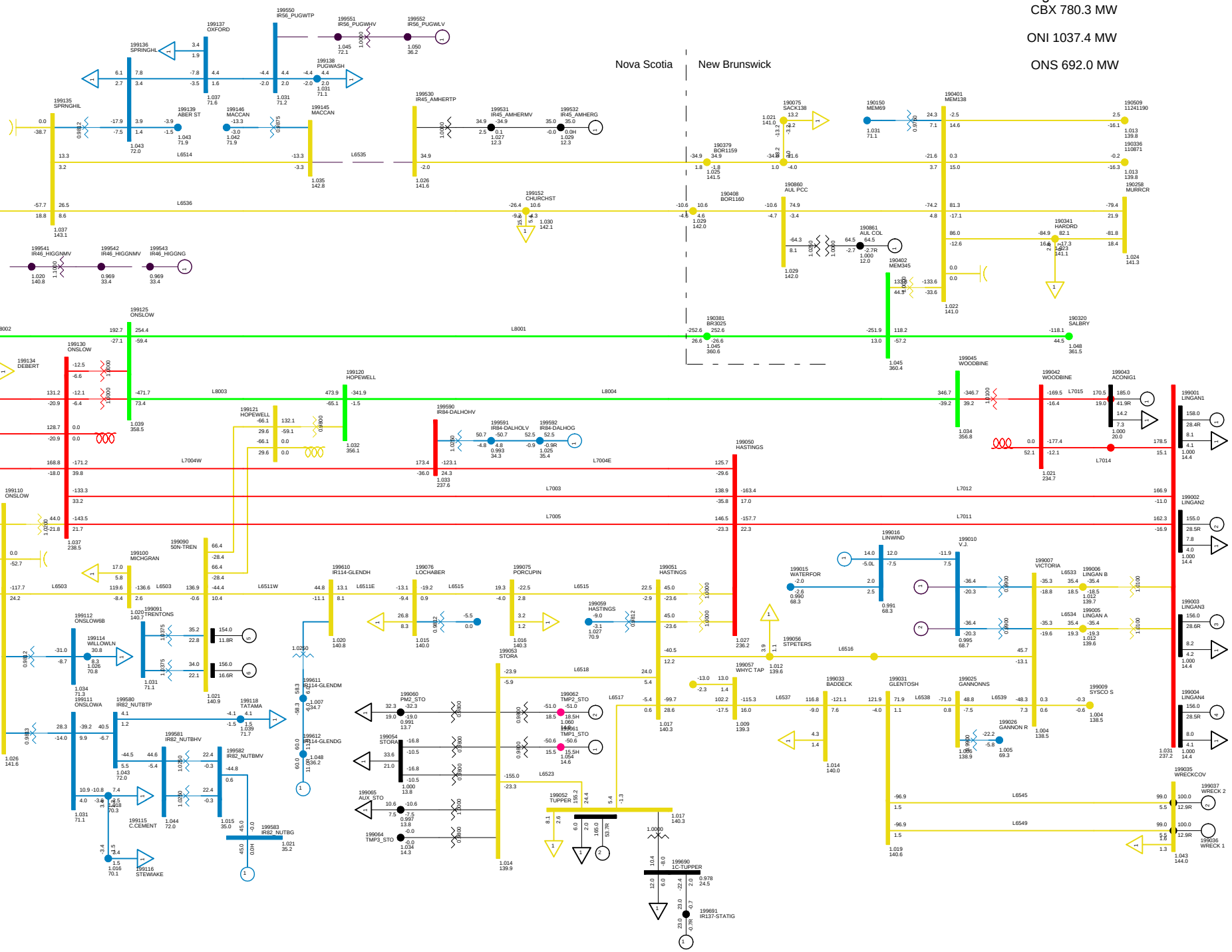

2013 SUMMER PEAK NS EXPORT 300 MW
C18 LOSE L6535S
NORTHEASTERN NS TUE, DEC 09 2008 23:10

Total Wind Gen: 290.1 MW | Gross Tupper 165.0 MW | Gross Wreck Cove 200.0 MW | Net Stora Load 178.9 MW
Gross Lingan 625.0 MW | Gross Trenton 310.0 MW | Gross Gas Turbine 0.0 MW | Total BMPC Load 108.6 MW
Gross Pt Aconi 185.0 MW | Gross Tuft's Cove 229.2 MW | Gross Small Hydro 42.9 MW

Bus - VOLTAGE (KV/PU)
Branch - MW/MVAR
Equipment - MW/MVAR
110.0%RATEA
1.0500V 0.950UV
KV: <=25.000 <=69.000 <=138.000 <=230.000 <=345.000 >345.000

Figure ___

NSX 300.0 MW
CBX 780.3 MW
ONI 1037.4 MW
ONS 692.0 MW

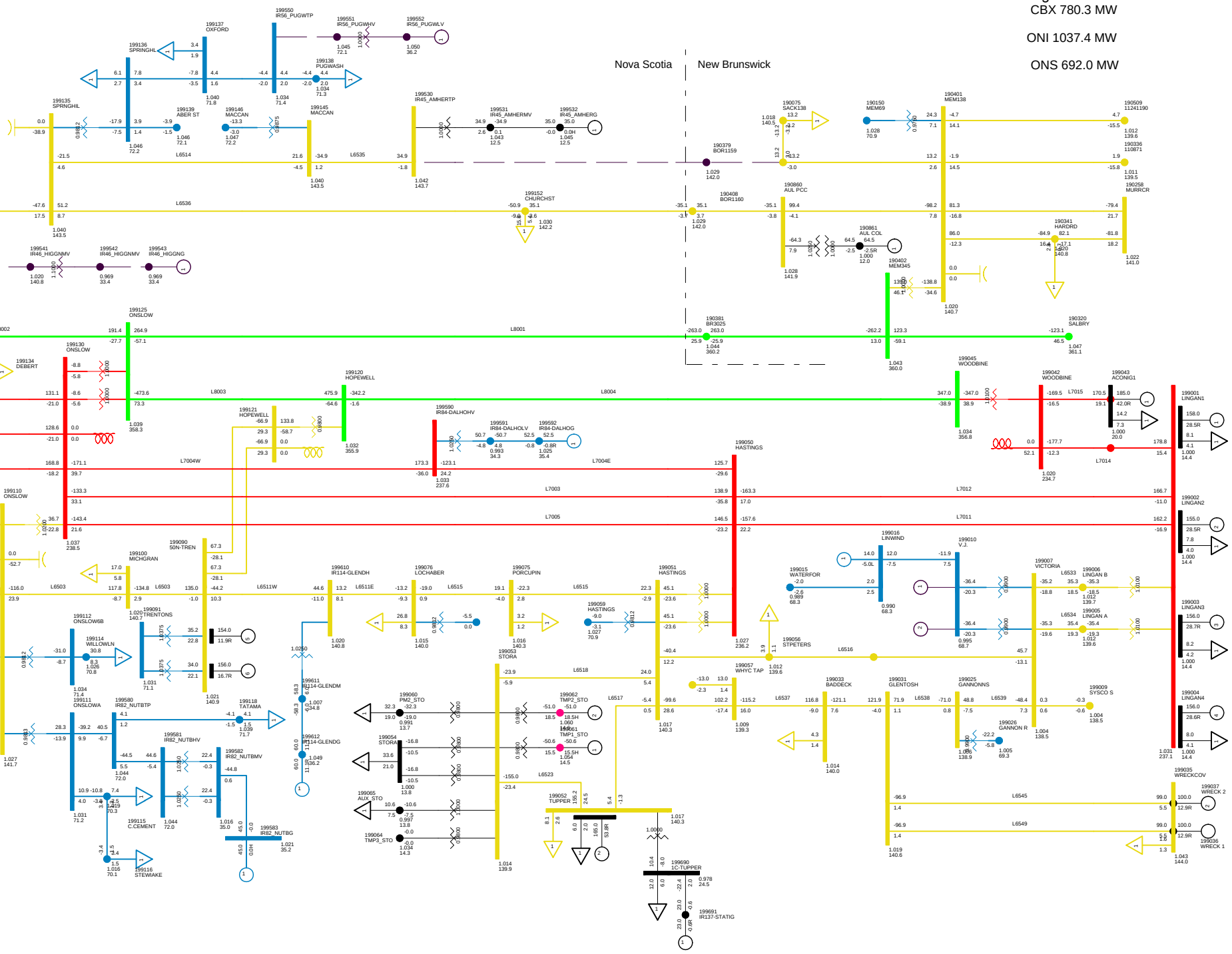

2013 SUMMER PEAK NS EXPORT 300 MW
C19 LOSE L6535N
NORTHEASTERN NS TUE, DEC 09 2008 23:10

Total Wind Gen: 290.1 MW | Gross Tupper 165.0 MW | Gross Wreck Cove 200.0 MW | Net Stora Load 178.9 MW
Gross Lingan 625.0 MW | Gross Trenton 310.0 MW | Gross Gas Turbine 0.0 MW | Total BMPC Load 108.6 MW
Gross Pt Aconi 185.0 MW | Gross Tuft's Cove 229.2 MW | Gross Small Hydro 42.9 MW

Bus - VOLTAGE (KV/PU)
Branch - MW/MVAR
Equipment - MW/MVAR
110.0%RATEA
1.0500V 0.950UV
KV: <=25.000 <=69.000 <=138.000 <=230.000 <=345.000 >345.000

Figure ___

NSX 227.3 MW
CBX 703.1 MW
ONI 964.2 MW
ONS 691.8 MW

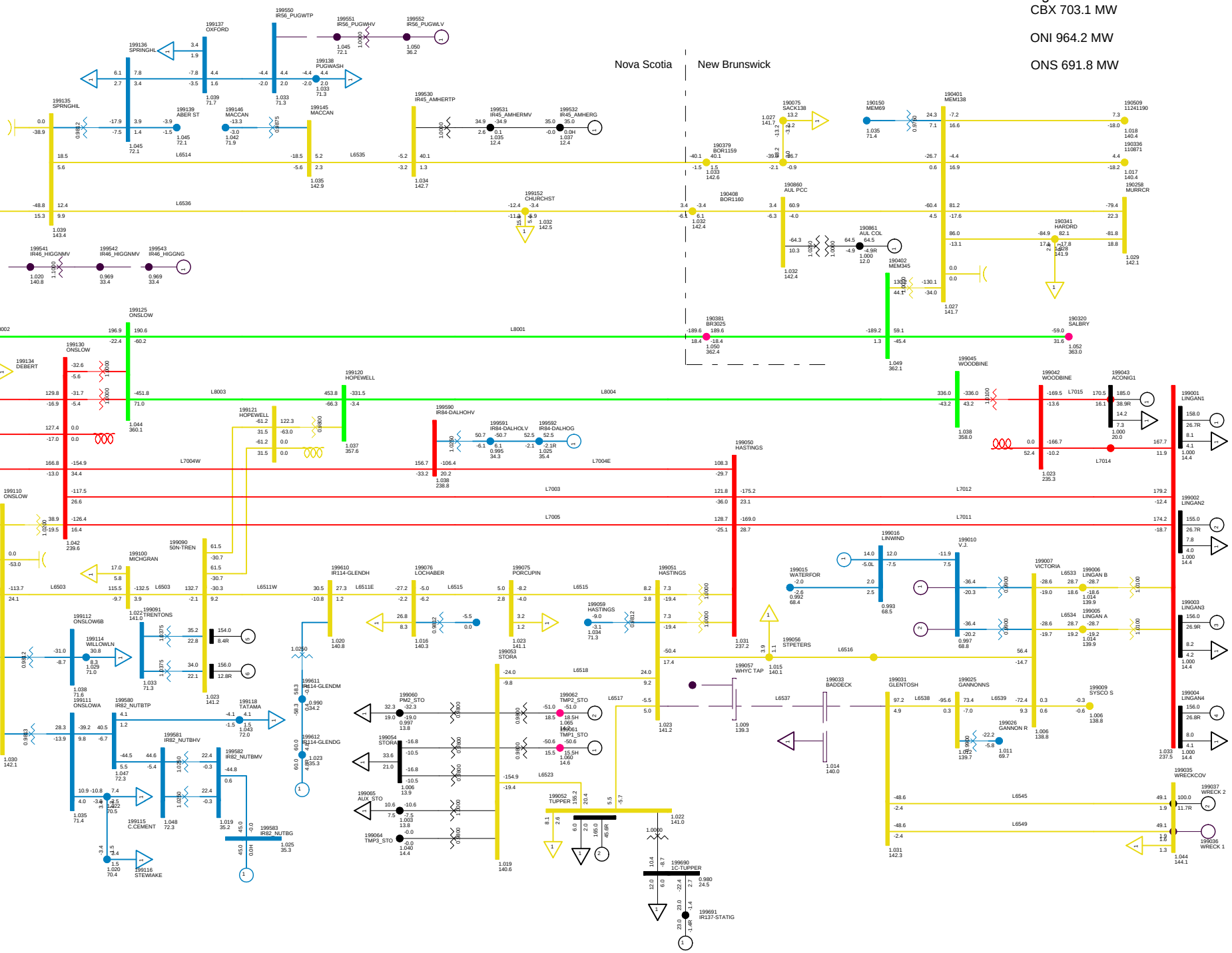

2013 SUMMER PEAK NS EXPORT 300 MW
C20 LOSE L6537
NORTHEASTERN NS TUE, DEC 09 2008 23:10

Total Wind Gen: 290.1 MW
Gross Lingan 625.0 MW
Gross Pt Aconi 185.0 MW
Gross Tupper 165.0 MW
Gross Trenton 310.0 MW
Gross Tuft's Cove 229.2 MW
Gross Wreck Cove 100.0 MW
Gross Gas Turbine 0.0 MW
Gross Small Hydro 42.9 MW
Net Stora Load 178.9 MW
Total BMPC Load 108.5 MW

Bus - VOLTAGE (KV/PU)
Branch - MW/MVAR
Equipment - MW/MVAR
110.0%RATEA
1.050UV 0.950UV
KV: <=25.000 <=69.000 <=138.000 <=230.000 <=345.000 >345.000

Figure ___

NSX 303.0 MW
CBX 783.6 MW
ONI 1040.6 MW
ONS 692.0 MW

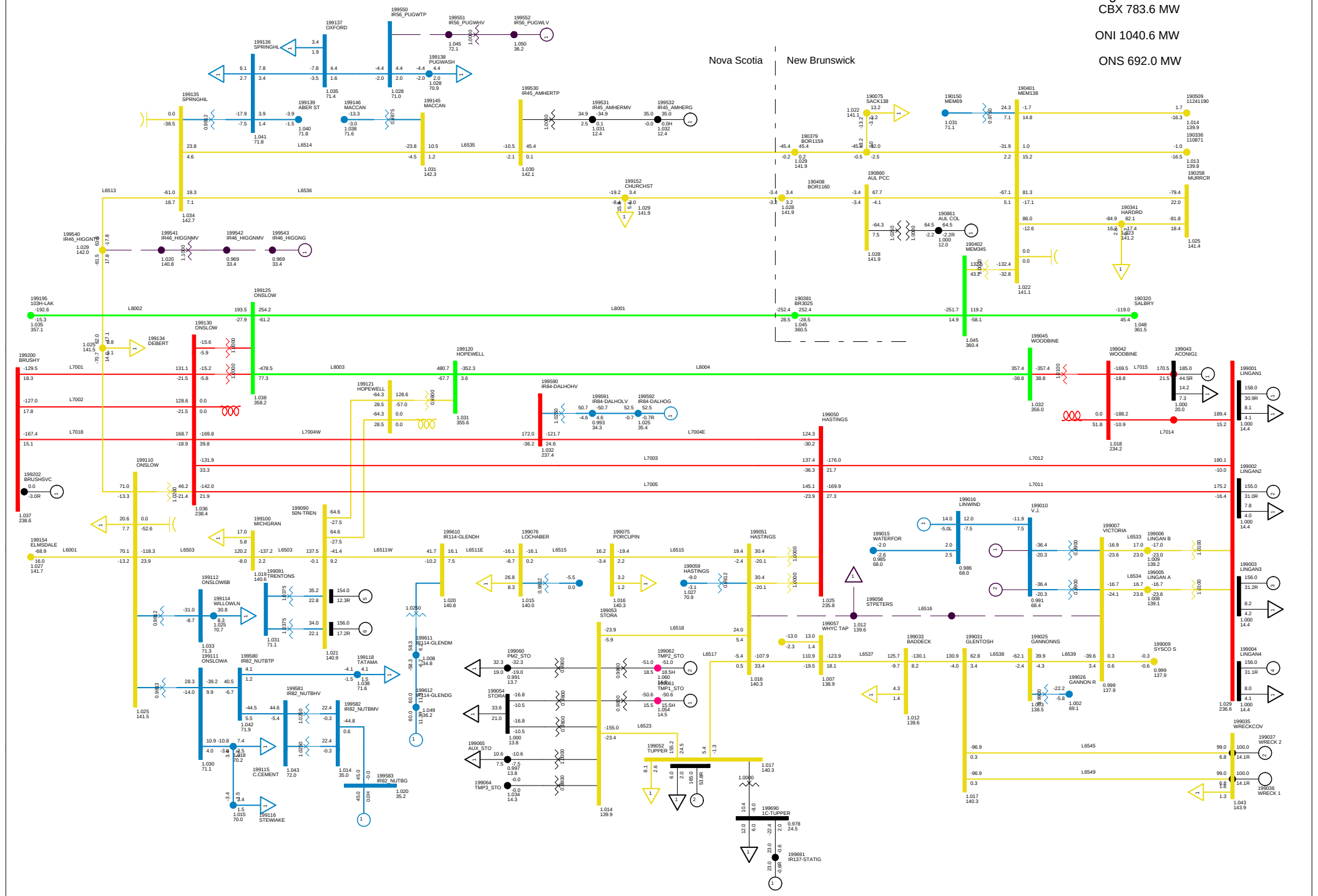

2013 SUMMER PEAK NS EXPORT 300 MW
C21 LOSE L6516
NORTHEASTERN NS TUE, DEC 09 2008 23:11

Total Wind Gen: 290.1 MW | Gross Tupper 165.0 MW | Gross Wreck Cove 200.0 MW | Net Stora Load 178.9 MW
Gross Lingan 625.0 MW | Gross Trenton 310.0 MW | Gross Gas Turbine 0.0 MW | Total BMPC Load 108.6 MW
Gross Pt Aconi 185.0 MW | Gross Tuft's Cove 229.2 MW | Gross Small Hydro 42.9 MW

Bus - VOLTAGE (KV/PU)
Branch - MW/MVAR
Equipment - MW/MVAR
110.0%RATEA
1.0500V 0.950UV
KV: <=25.000 <=69.000 <=138.000 <=230.000 <=345.000 >345.000

Figure ___

NSX 294.6 MW
CBX 775.2 MW
ONI 1032.1 MW
ONS 692.0 MW

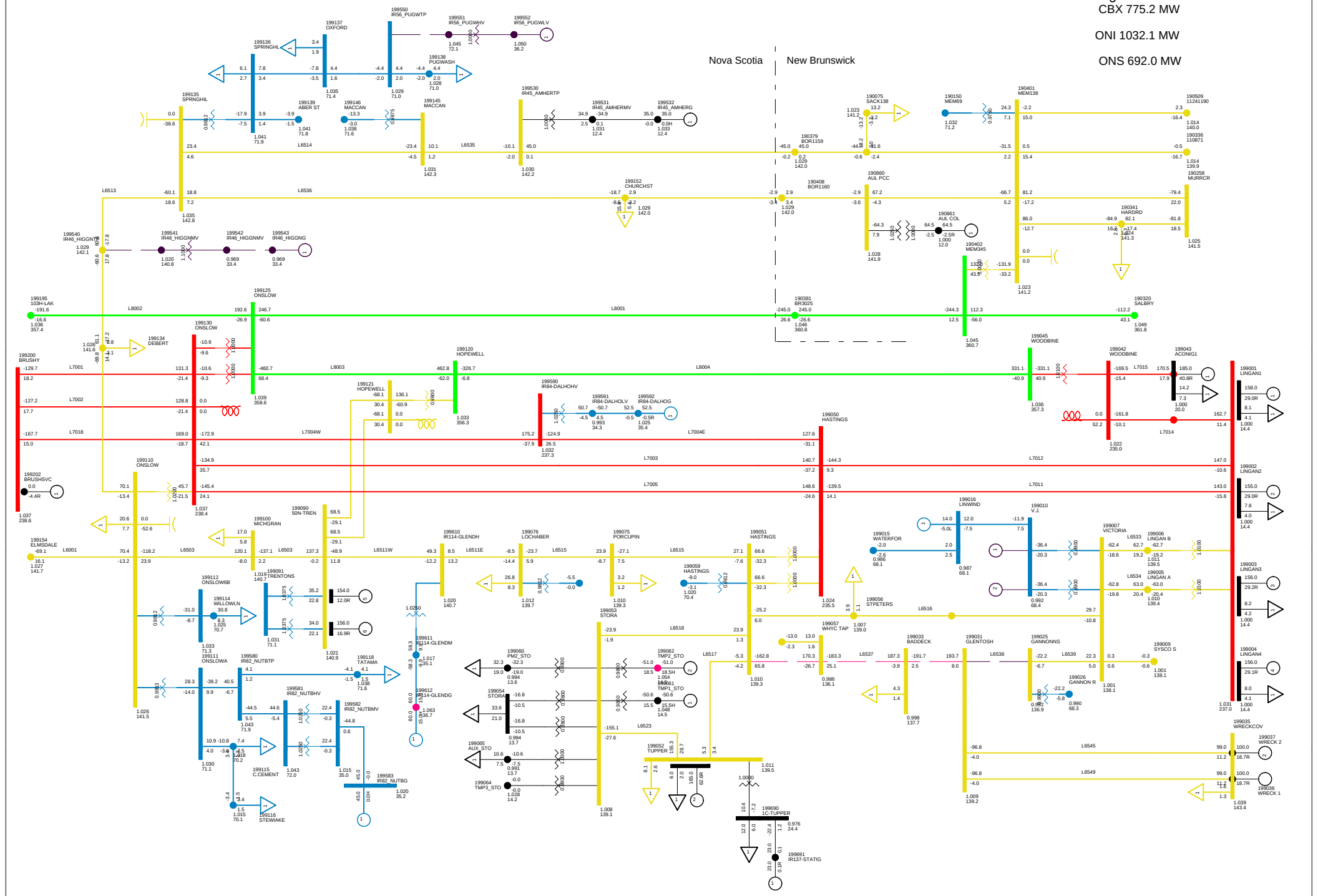

2013 SUMMER PEAK NS EXPORT 300 MW
C22 LOSE L6538
NORTHEASTERN NS TUE, DEC 09 2008 23:11

Total Wind Gen: 290.1 MW
Gross Lingan 625.0 MW
Gross Pt Aconi 185.0 MW
Gross Tupper 165.0 MW
Gross Trenton 310.0 MW
Gross Tuft's Cove 229.2 MW
Gross Wreck Cove 200.0 MW
Gross Gas Turbine 0.0 MW
Gross Small Hydro 42.9 MW
Net Stora Load 178.9 MW
Total BMPC Load 108.6 MW

Bus - VOLTAGE (KV/PU)
Branch - MW/MVAR
Equipment - MW/MVAR
110.0%RATEA
1.050OV 0.950UV
KV: <=25.000 <=69.000 <=138.000 <=230.000 <=345.000 >345.000

Figure ___

Total Wind Gen: 290.1 MW | Gross Tupper 165.0 MW | Gross Wreck Cove 200.0 MW

Gross Lingan 625.0 MW | Gross Trenton 310.0 MW | Gross Gas Turbine 0.0 MW

Gross Pt Aconi 185.0 MW | Gross Tuft's Cove 229.2 MW | Gross Small Hydro 42.9 MW

Net Stora Load 178.9 MW | Total BMPC Load 108.6 MW

NSX 299.9 MW

CBX 780.3 MW

ONI 1037.4 MW

ONS 692.0 MW

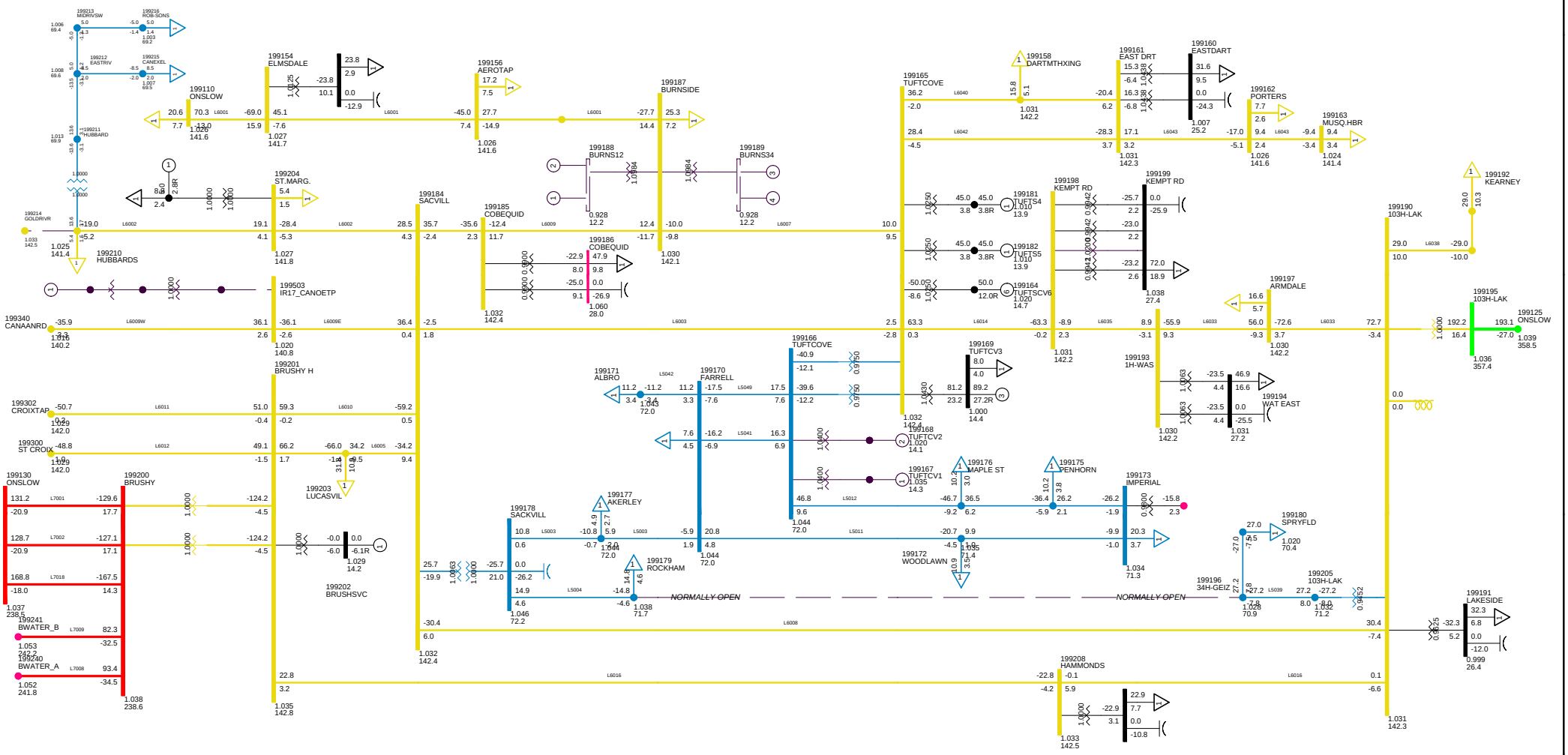

2010 SUMMER PEAK, NSLOAD=1700
NS-NB=+300; NB-NE=1000; CBX=780; ONI=1037 ONS=692
METRO ZONE TUE, DEC 09 2008 23:11

Bus - VOLTAGE (KV/PU)
Branch - MW/MVAR
Equipment - MW/MVAR
100.0%RATEA
1.050OV 0.950UV
KV: <=30.000 <=69.000 <=138.000 <=230.000 <=345.000 >345.000

Figure __

Total Wind Gen: 290.1 MW
Gross Tupper 165.0 MW
Gross Wreck Cove 200.0 MW
Gross Lingan 625.0 MW
Gross Trenton 310.0 MW
Gross Gas Turbine 0.0 MW
Gross Pt Aconi 185.0 MW
Gross Tuft's Cove 229.2 MW
Gross Small Hydro 42.9 MW

Net Stora Load 178.9 MW
Total BMPC Load 108.6 MW

NSX 299.9 MW
CBX 780.3 MW
ONI 1037.4 MW
ONS 692.0 MW

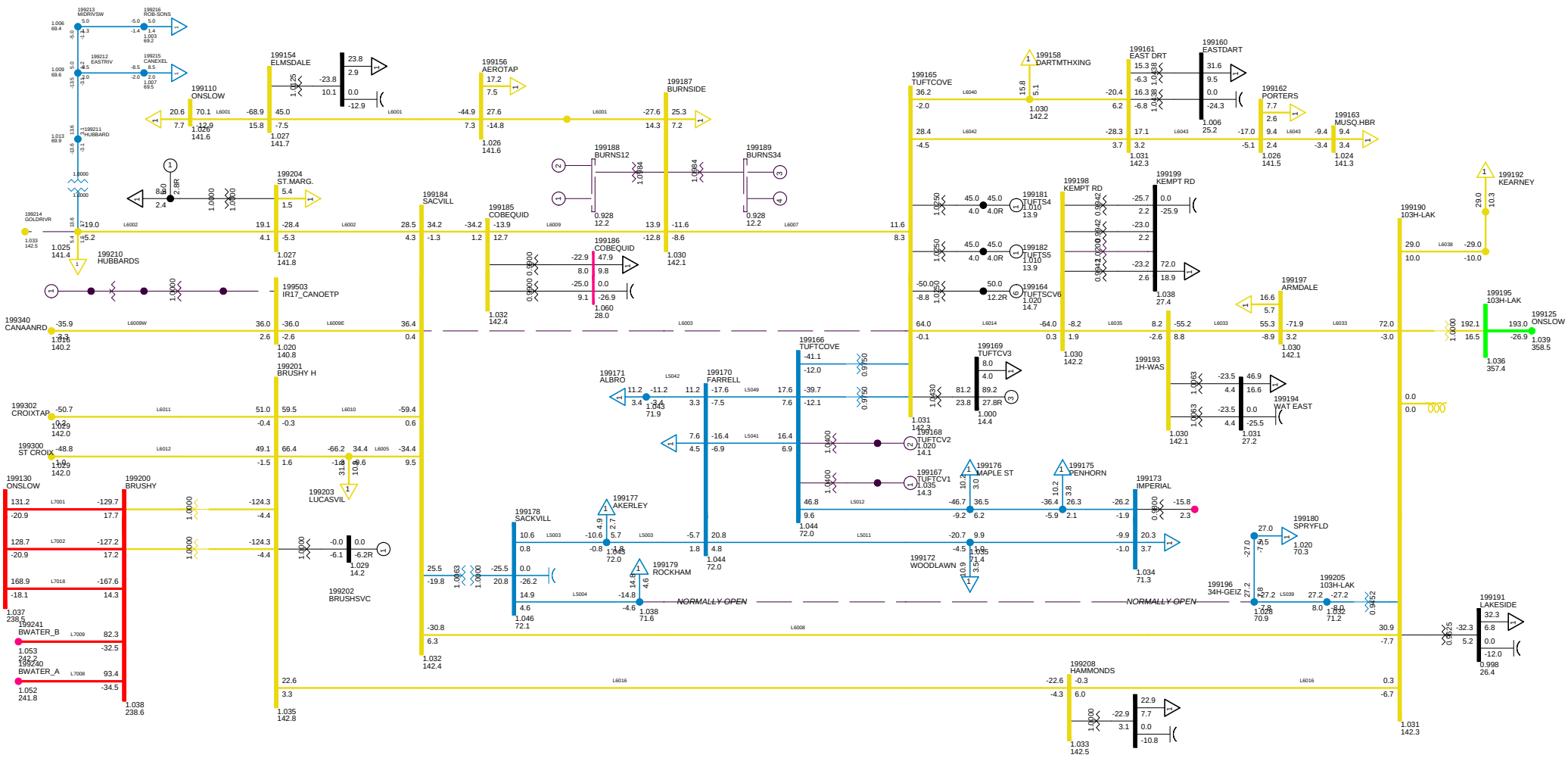

2013 SUMMER PEAK NS EXPORT 300 MW
C23 LOSE L6003
METRO ZONE TUE, DEC 09 2008 23:11

Bus - VOLTAGE (KV/PU)
Branch - MW/MVAR
Equipment - MW/MVAR
100.0%RATEA
1.050OV 0.950UV
KV: <=30.000 <=69.000 <=138.000 <=230.000 <=345.000 >345.000

Figure __

Total Wind Gen: 290.1 MW | Gross Tupper 165.0 MW | Gross Wreck Cove 200.0 MW

Gross Lingan 625.0 MW | Gross Trenton 310.0 MW | Gross Gas Turbine 0.0 MW

Gross Pt Aconi 185.0 MW | Gross Tuft's Cove 229.2 MW | Gross Small Hydro 42.9 MW

Net Stora Load 178.9 MW | Total BMPC Load 108.6 MW

NSX 332.1 MW

CBX 780.4 MW

ONI 1037.4 MW

ONS 659.6 MW

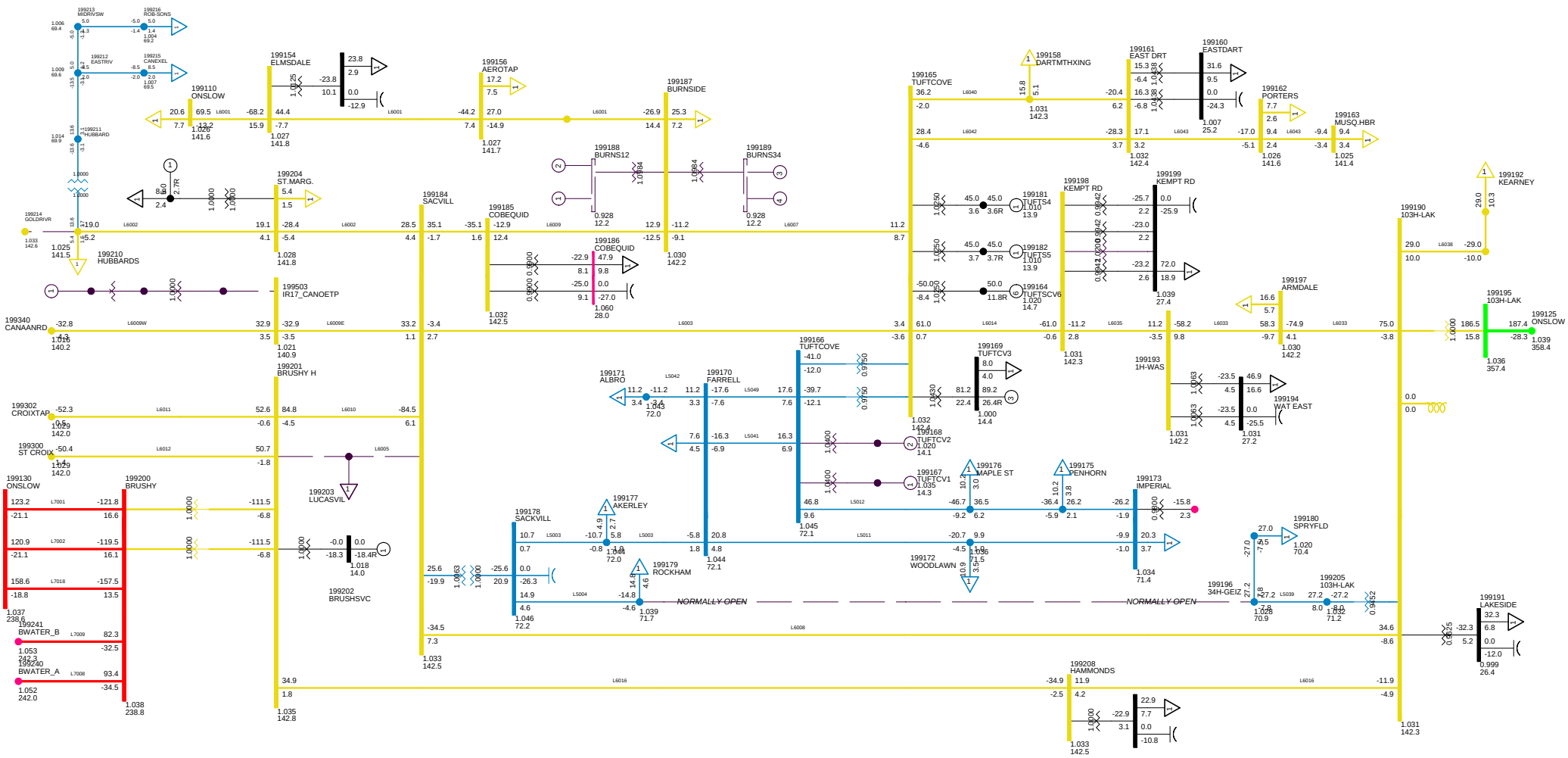

2013 SUMMER PEAK NS EXPORT 300 MW
C24 LOSE L6005
METRO ZONE TUE, DEC 09 2008 23:11

Bus - VOLTAGE (KV/PU)
Branch - MW/MVAR
Equipment - MW/MVAR
100.0%RATEA
1.050OV 0.950UV
KV: <=30.000 <=69.000 <=138.000 <=230.000 <=345.000 >345.000

Figure __

Total Wind Gen: 290.1 MW | Gross Tupper 165.0 MW | Gross Wreck Cove 200.0 MW

Gross Lingan 625.0 MW | Gross Trenton 310.0 MW | Gross Gas Turbine 0.0 MW

Gross Pt Aconi 185.0 MW | Gross Tuft's Cove 229.2 MW | Gross Small Hydro 42.9 MW

Net Stora Load 178.9 MW | Total BMPC Load 108.6 MW

NSX 299.8 MW

CBX 780.3 MW

ONI 1037.4 MW

ONS 692.0 MW

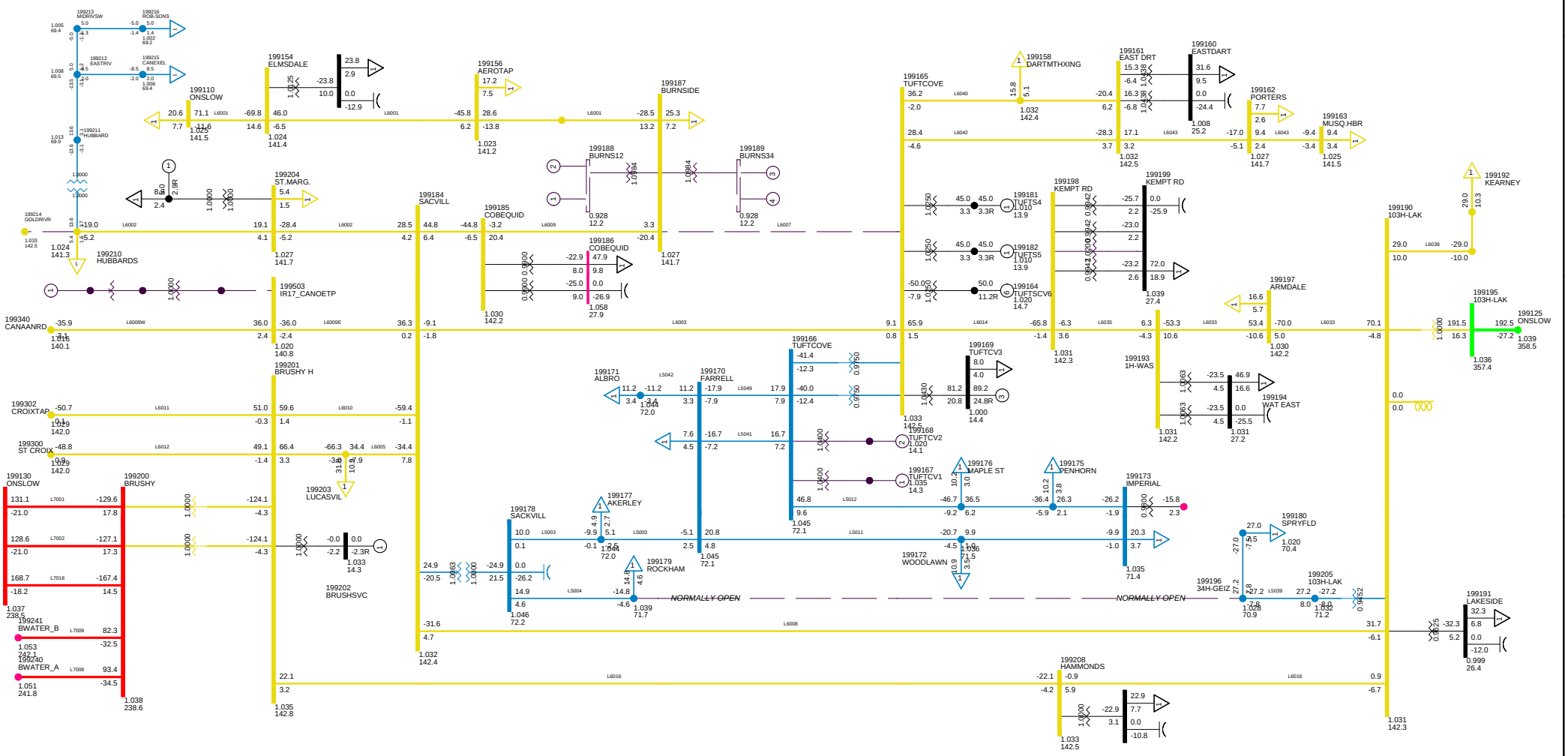

2013 SUMMER PEAK NS EXPORT 300 MW
C25 LOSE L6007
METRO ZONE TUE, DEC 09 2008 23:11

Bus - VOLTAGE (KV/PU)
Branch - MW/MVAR
Equipment - MW/MVAR
100.0%RATEA
1.050OV 0.950UV
KV: <=30.000 <=69.000 <=138.000 <=230.000 <=345.000 >345.000

Figure __

Total Wind Gen: 290.1 MW
Gross Tupper 165.0 MW
Gross Wreck Cove 200.0 MW
Gross Lingan 625.0 MW
Gross Trenton 310.0 MW
Gross Gas Turbine 0.0 MW
Gross Pt Aconi 185.0 MW
Gross Tuft's Cove 229.2 MW
Gross Small Hydro 42.9 MW
Net Stora Load 178.9 MW
Total BMPC Load 108.6 MW

NSX 299.6 MW
CBX 780.3 MW
ONI 1037.3 MW
ONS 692.2 MW

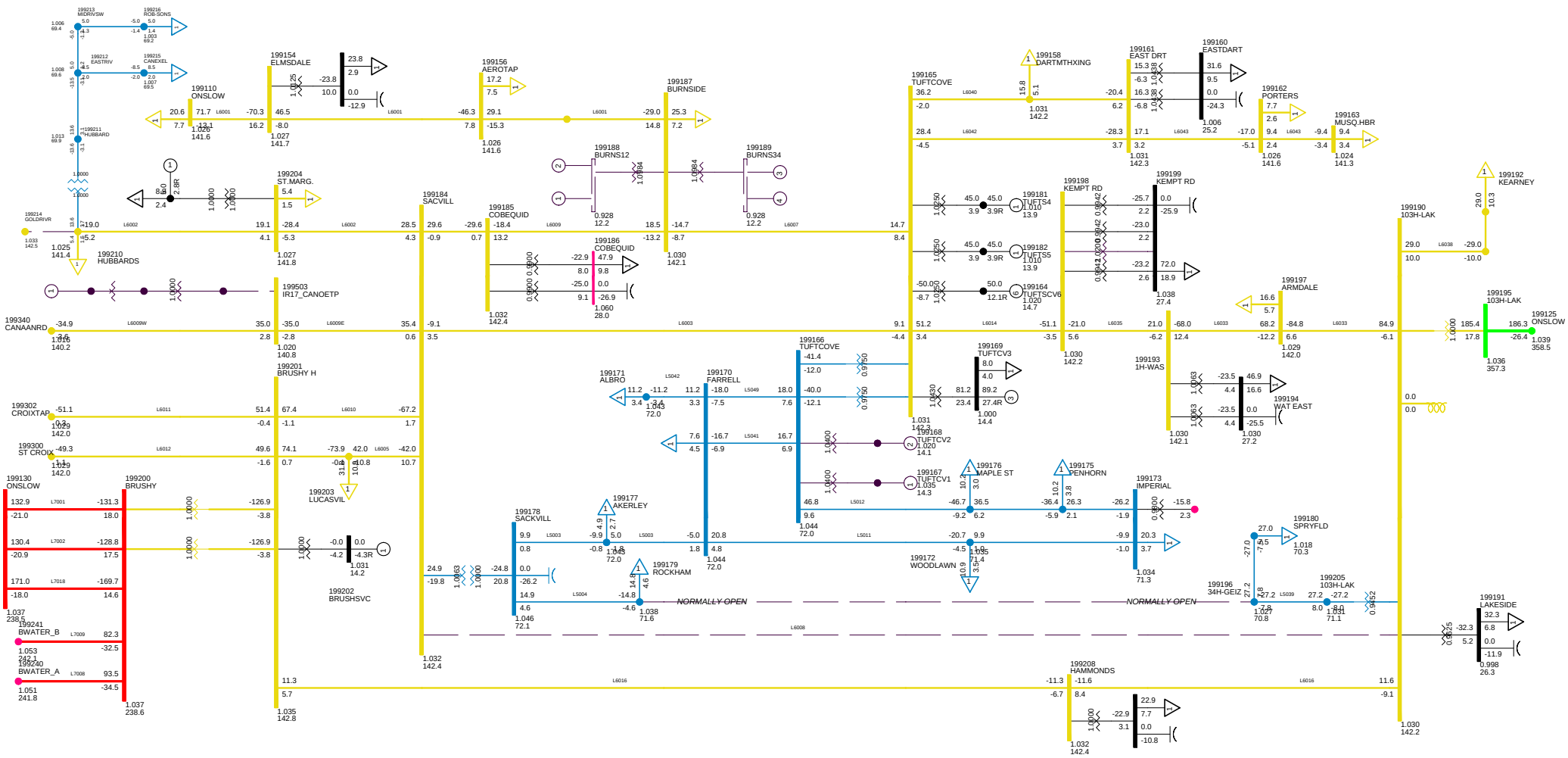

2013 SUMMER PEAK NS EXPORT 300 MW
C26 LOSE L6008
METRO ZONE TUE, DEC 09 2008 23:11

Bus - VOLTAGE (KV/PU)
Branch - MW/MVAR
Equipment - MW/MVAR
100.0%RATEA
1.050OV 0.950UV
KV: <=30.000 <=69.000 <=138.000 <=230.000 <=345.000 >345.000

Figure __

Total Wind Gen: 290.1 MW | Gross Tupper 165.0 MW | Gross Wreck Cove 200.0 MW

Gross Lingan 625.0 MW | Gross Trenton 310.0 MW | Gross Gas Turbine 0.0 MW

Gross Pt Aconi 185.0 MW | Gross Tuft's Cove 229.2 MW | Gross Small Hydro 42.9 MW

Net Stora Load 178.9 MW | Total BMPC Load 108.6 MW

NSX 323.1 MW

CBX 780.3 MW

ONI 1037.4 MW

ONS 668.6 MW

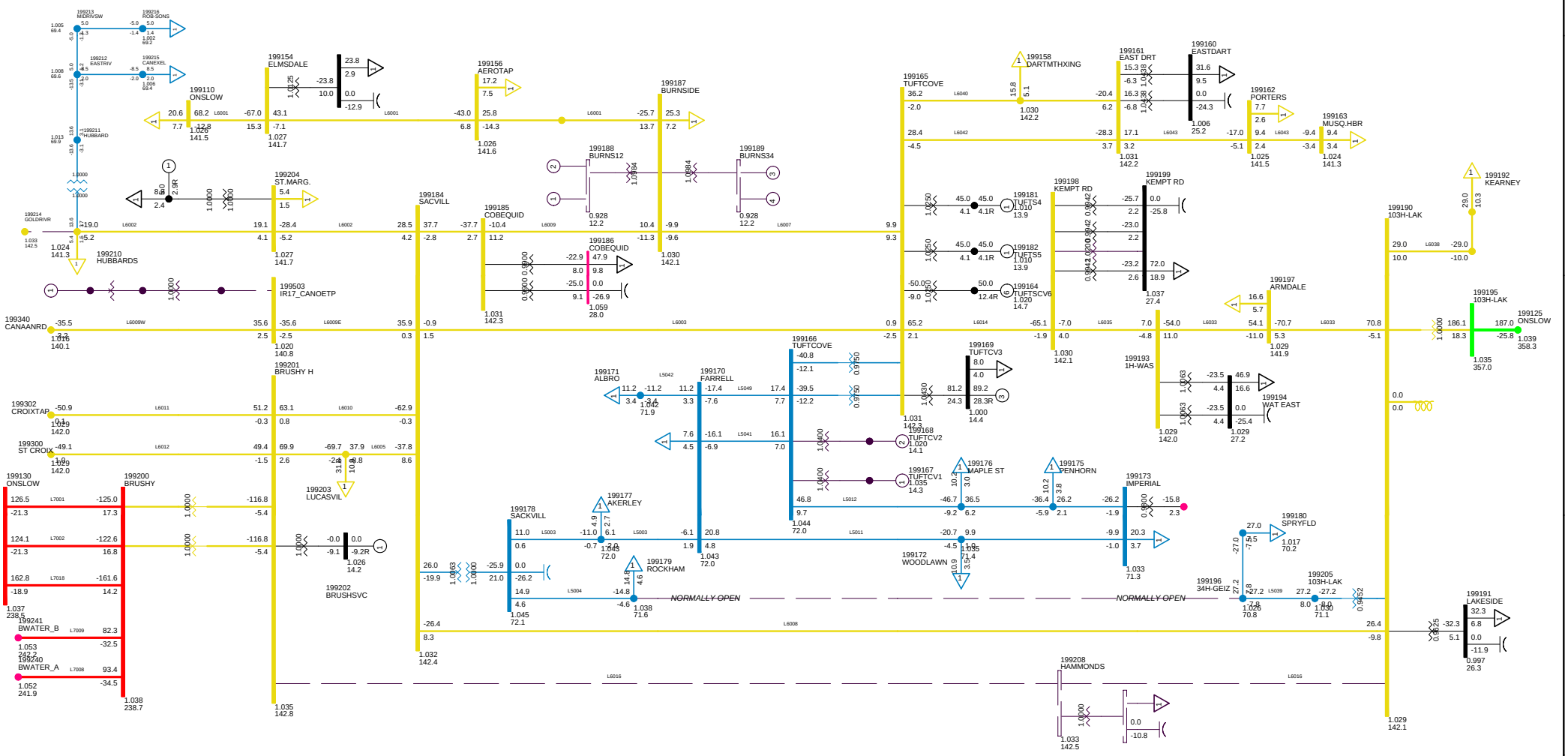

2013 SUMMER PEAK NS EXPORT 300 MW
C27 LOSE L6009
METRO ZONE TUE, DEC 09 2008 23:11

Bus - VOLTAGE (KV/PU)
Branch - MW/MVAR
Equipment - MW/MVAR
100.0%RATEA
1.050OV 0.950UV
KV: <=30.000 <=69.000 <=138.000 <=230.000 <=345.000 >345.000

Figure __

Total Wind Gen: 290.1 MW | Gross Tupper 165.0 MW | Gross Wreck Cove 200.0 MW

Gross Lingan 625.0 MW | Gross Trenton 310.0 MW | Gross Gas Turbine 0.0 MW

Gross Pt Aconi 185.0 MW | Gross Tuft's Cove 229.2 MW | Gross Small Hydro 42.9 MW

Net Stora Load 178.9 MW | Total BMPC Load 108.6 MW

NSX 299.6 MW

CBX 780.3 MW

ONI 1037.4 MW

ONS 692.3 MW

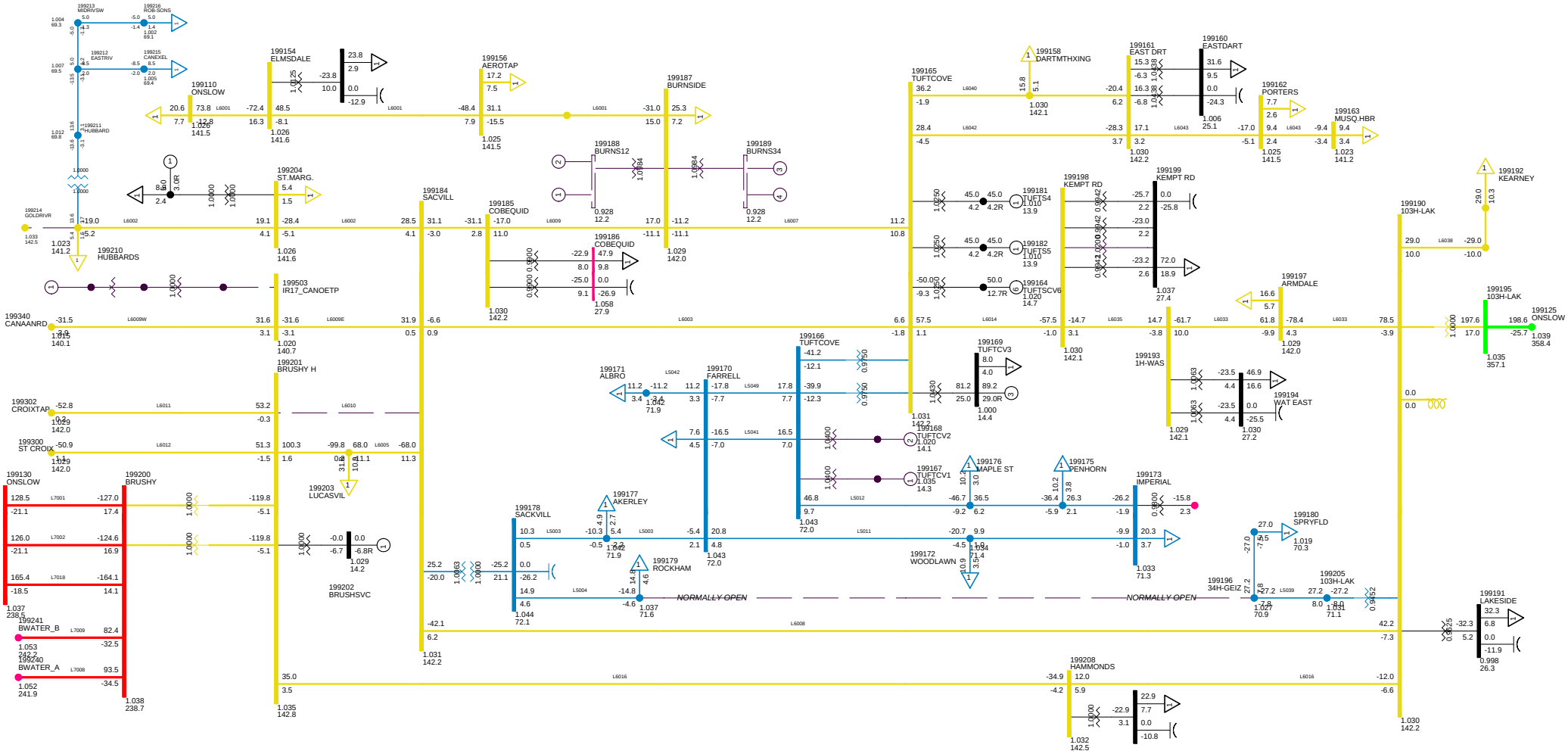

2013 SUMMER PEAK NS EXPORT 300 MW
C28 LOSE L6010
METRO ZONE TUE, DEC 09 2008 23:11

Bus - VOLTAGE (KV/PU)
Branch - MW/MVAR
Equipment - MW/MVAR
100.0%RATEA
1.050OV 0.950UV
KV: <=30.000 <=69.000 <=138.000 <=230.000 <=345.000 >345.000

Figure __

Total Wind Gen: 290.1 MW
Gross Tupper 165.0 MW
Gross Wreck Cove 200.0 MW
Gross Lingan 625.0 MW
Gross Trenton 310.0 MW
Gross Gas Turbine 0.0 MW
Gross Pt Aconi 185.0 MW
Gross Tuft's Cove 229.2 MW
Gross Small Hydro 42.9 MW
Net Stora Load 178.9 MW
Total BMPC Load 108.6 MW

NSX 299.4 MW
CBX 780.3 MW
ONI 1037.4 MW
ONS 692.4 MW

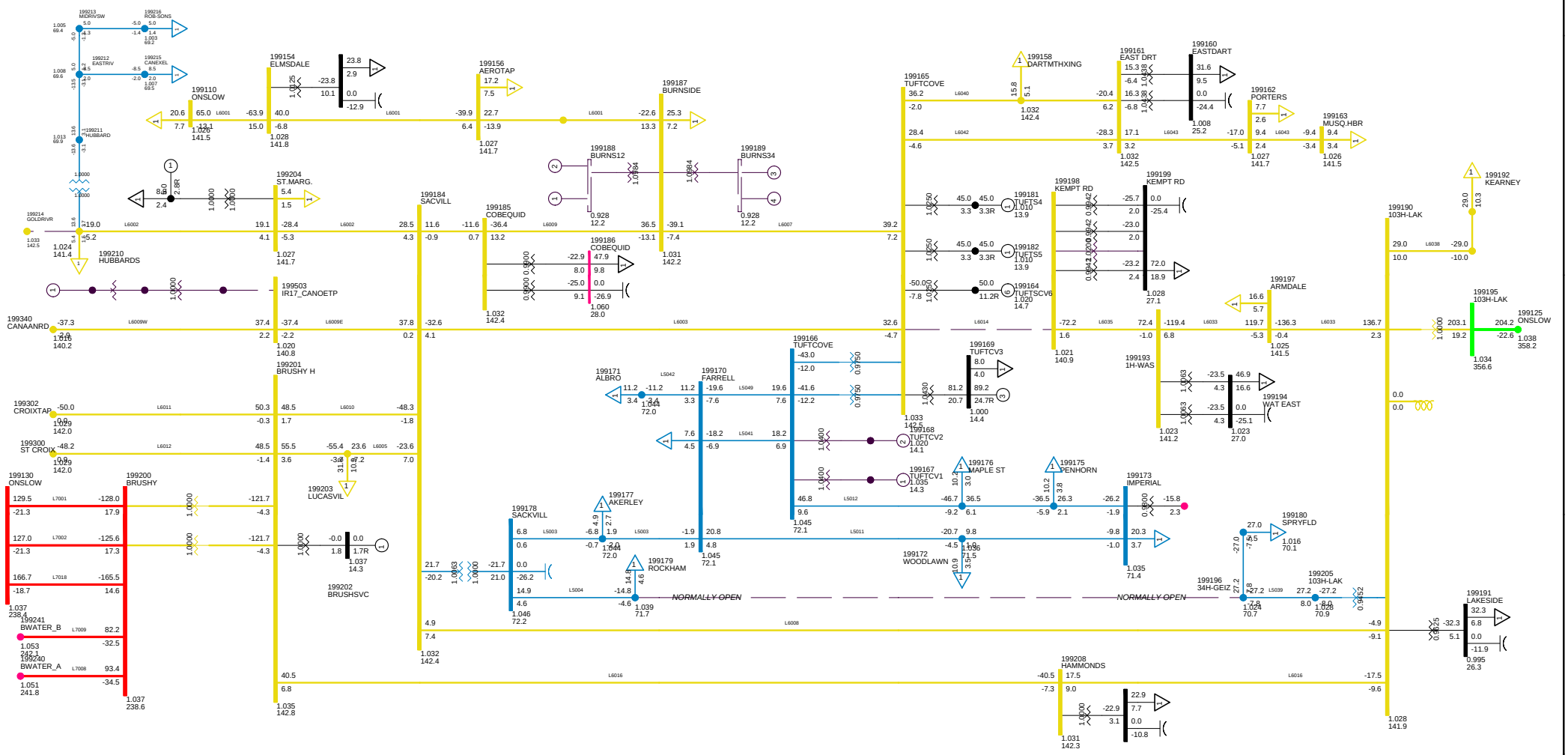

2013 SUMMER PEAK NS EXPORT 300 MW
C29 LOSE L6014
METRO ZONE TUE, DEC 09 2008 23:12

Bus - VOLTAGE (KV/PU)
Branch - MW/MVAR
Equipment - MW/MVAR
100.0%RATEA
1.050OV 0.950UV
KV: <=30.000 <=69.000 <=138.000 <=230.000 <=345.000 >345.000

Figure __

Total Wind Gen: 290.1 MW
Gross Tupper 165.0 MW
Gross Wreck Cove 200.0 MW
Gross Lingan 625.0 MW
Gross Trenton 310.0 MW
Gross Gas Turbine 0.0 MW
Gross Pt Aconi 185.0 MW
Gross Tuft's Cove 229.2 MW
Gross Small Hydro 42.9 MW
Net Stora Load 178.9 MW
Total BMPC Load 108.6 MW

NSX 323.1 MW
CBX 780.3 MW
ONI 1037.4 MW
ONS 668.6 MW

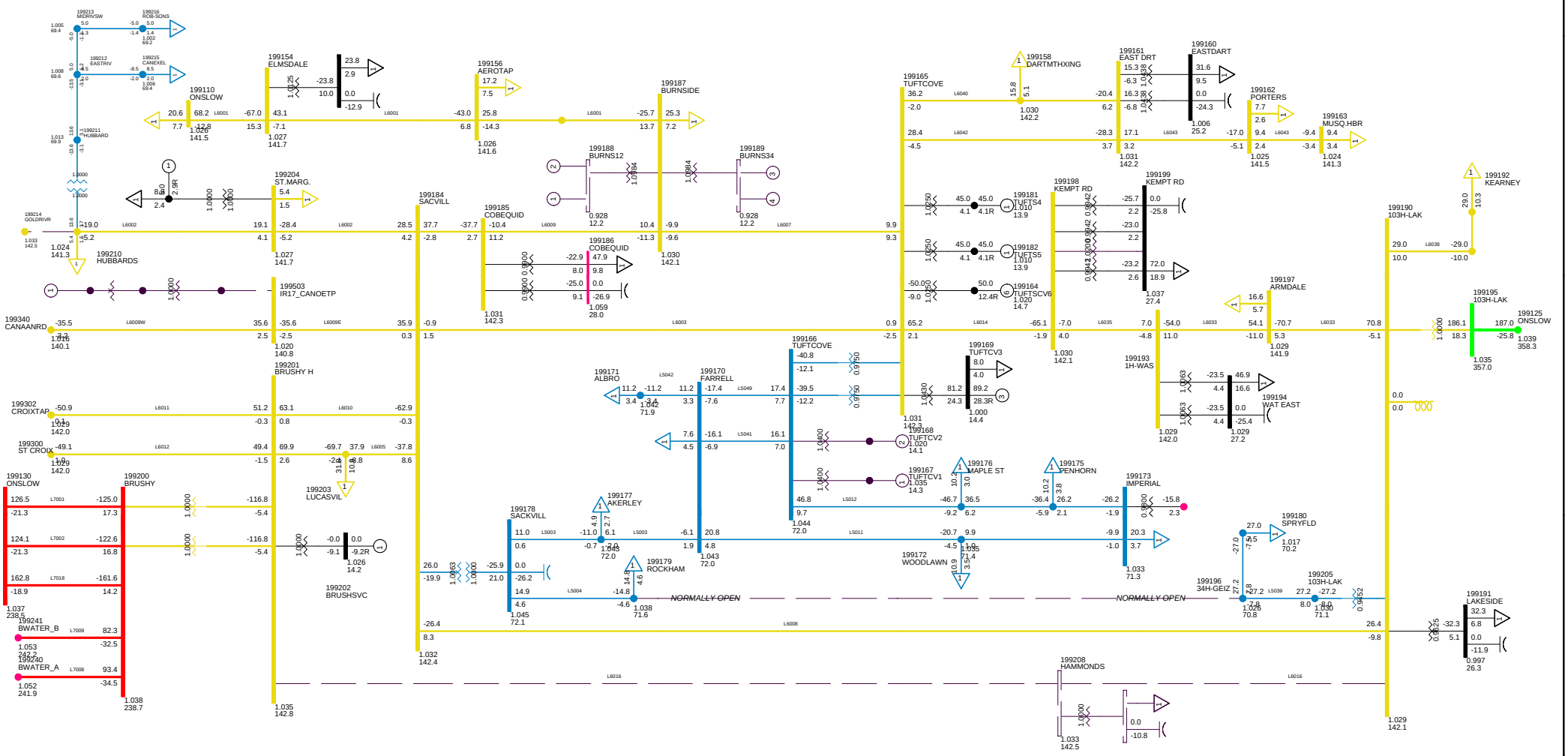

2013 SUMMER PEAK NS EXPORT 300 MW
C30 LOSE L6016
METRO ZONE TUE, DEC 09 2008 23:12

Bus - VOLTAGE (KV/PU)
Branch - MW/MVAR
Equipment - MW/MVAR
100.0%RATEA
1.050OV 0.950UV
KV: <=30.000 <=69.000 <=138.000 <=230.000 <=345.000 >345.000

Figure __

Total Wind Gen: 290.1 MW
Gross Tupper 165.0 MW
Gross Wreck Cove 200.0 MW
Gross Lingan 625.0 MW
Gross Trenton 310.0 MW
Gross Gas Turbine 0.0 MW
Gross Pt Aconi 185.0 MW
Gross Tuft's Cove 229.2 MW
Gross Small Hydro 42.9 MW
Net Stora Load 178.9 MW
Total BMPC Load 108.6 MW

NSX 339.2 MW
CBX 780.3 MW
ONI 1037.4 MW
ONS 652.4 MW

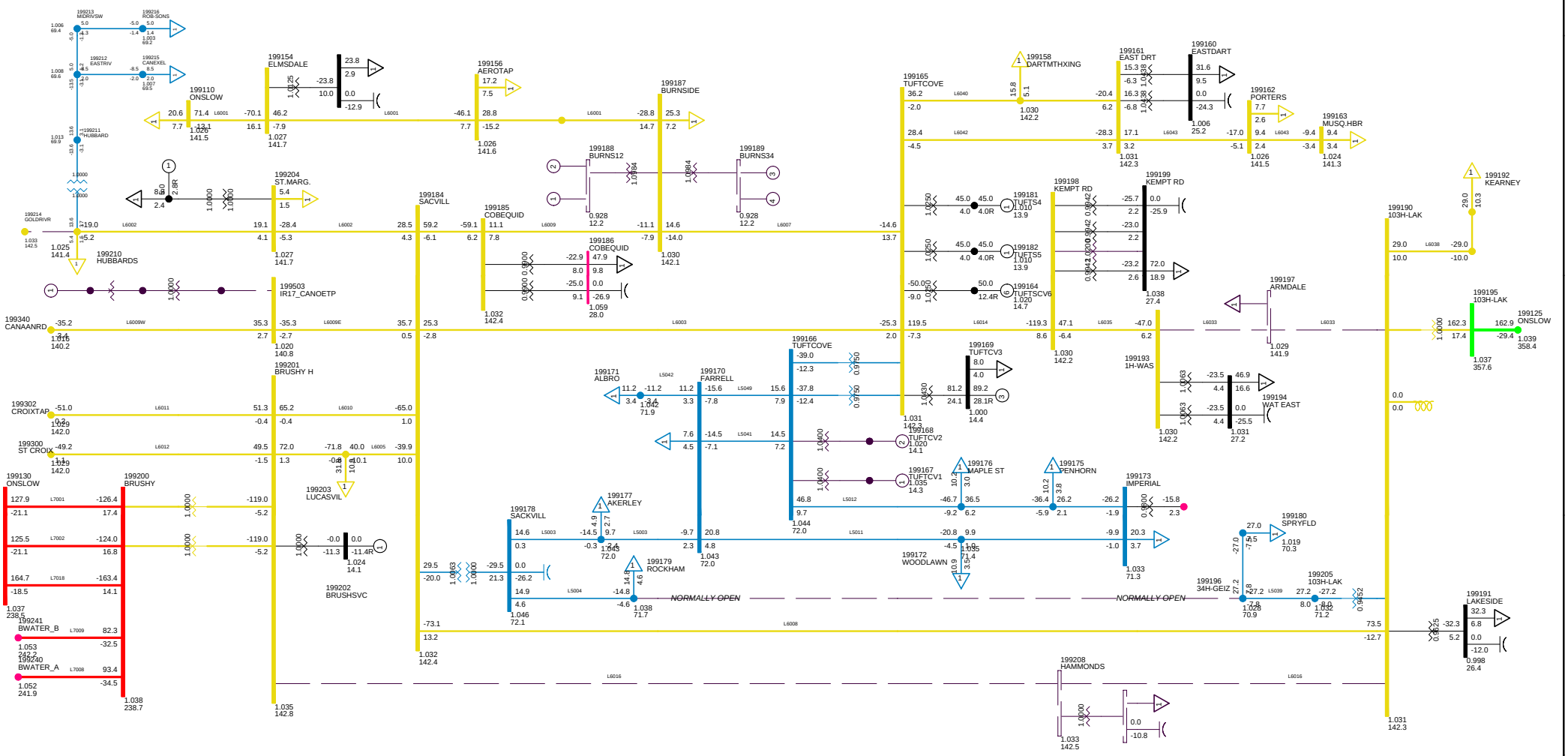

2013 SUMMER PEAK NS EXPORT 300 MW
C31 LOSE L6033
METRO ZONE TUE, DEC 09 2008 23:12

Bus - VOLTAGE (KV/PU)
Branch - MW/MVAR
Equipment - MW/MVAR
100.0%RATEA
1.050OV 0.950UV
KV: <=30.000 <=69.000 <=138.000 <=230.000 <=345.000 >345.000

Figure __

Total Wind Gen: 290.1 MW
Gross Tupper 165.0 MW
Gross Wreck Cove 200.0 MW
Gross Lingan 625.0 MW
Gross Trenton 310.0 MW
Gross Gas Turbine 0.0 MW
Gross Pt Aconi 185.0 MW
Gross Tuft's Cove 229.2 MW
Gross Small Hydro 42.9 MW
Net Stora Load 178.9 MW
Total BMPC Load 108.6 MW

NSX 299.8 MW
CBX 780.3 MW
ONI 1037.4 MW
ONS 692.0 MW

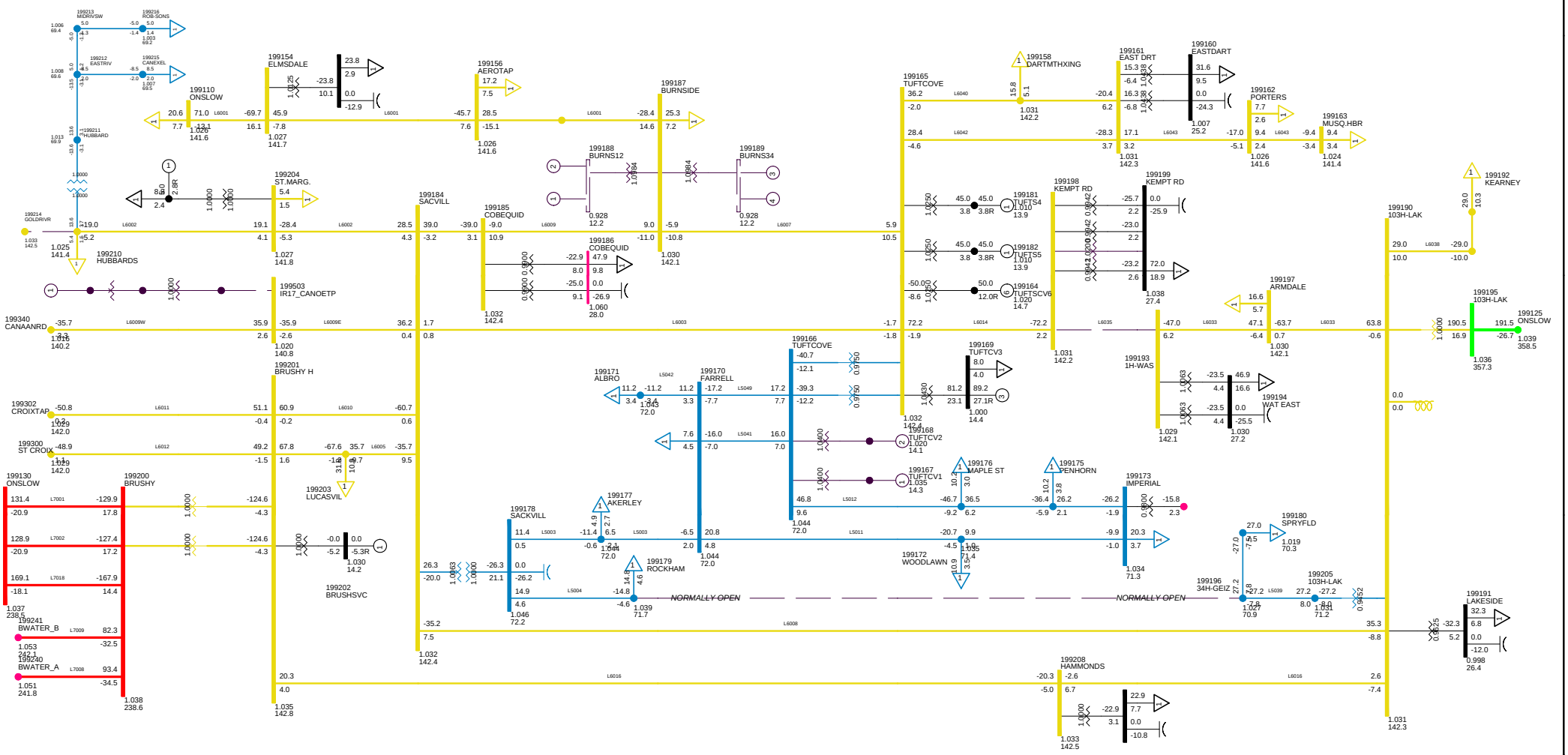

2013 SUMMER PEAK NS EXPORT 300 MW
C32 LOSE L6035
METRO ZONE TUE, DEC 09 2008 23:12

Bus - VOLTAGE (KV/PU)
Branch - MW/MVAR
Equipment - MW/MVAR
100.0%RATEA
1.050OV 0.950UV
KV: <=30.000 <=69.000 <=138.000 <=230.000 <=345.000 >345.000

Figure __

Total Wind Gen: 290.1 MW
Gross Tupper 165.0 MW
Gross Wreck Cove 200.0 MW
Gross Lingan 625.0 MW
Gross Trenton 310.0 MW
Gross Gas Turbine 0.0 MW
Gross Pt Aconi 185.0 MW
Gross Tuft's Cove 229.2 MW
Gross Small Hydro 42.9 MW
Net Stora Load 178.9 MW
Total BMPC Load 108.6 MW

NSX 321.3 MW
CBX 780.1 MW
ONI 1036.7 MW
ONS 670.0 MW

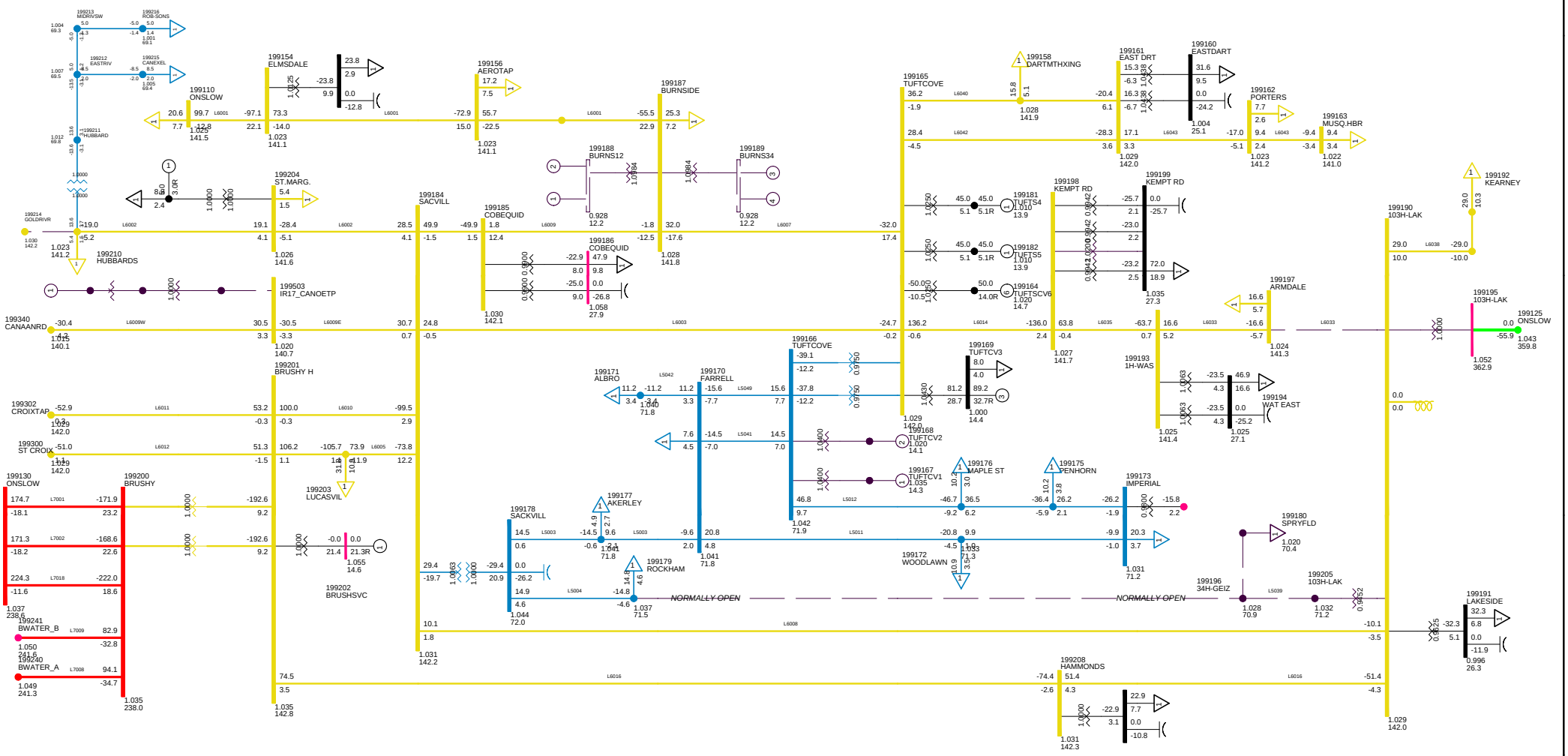

2013 SUMMER PEAK NS EXPORT 300 MW
C33 LOSE 103H-B61
METRO ZONE TUE, DEC 09 2008 23:12

Bus - VOLTAGE (KV/PU)
Branch - MW/MVAR
Equipment - MW/MVAR
100.0%RATEA
1.050OV 0.950UV
KV: <=30.000 <=69.000 <=138.000 <=230.000 <=345.000 >345.000

Figure __

Total Wind Gen: 290.1 MW | Gross Tupper 165.0 MW | Gross Wreck Cove 200.0 MW

Gross Lingan 625.0 MW | Gross Trenton 310.0 MW | Gross Gas Turbine 0.0 MW

Gross Pt Aconi 185.0 MW | Gross Tuft's Cove 184.2 MW | Gross Small Hydro 42.9 MW

Net Stora Load 178.9 MW | Total BMPC Load 108.6 MW

NSX 278.3 MW

CBX 780.1 MW

ONI 1036.8 MW

ONS 713.3 MW

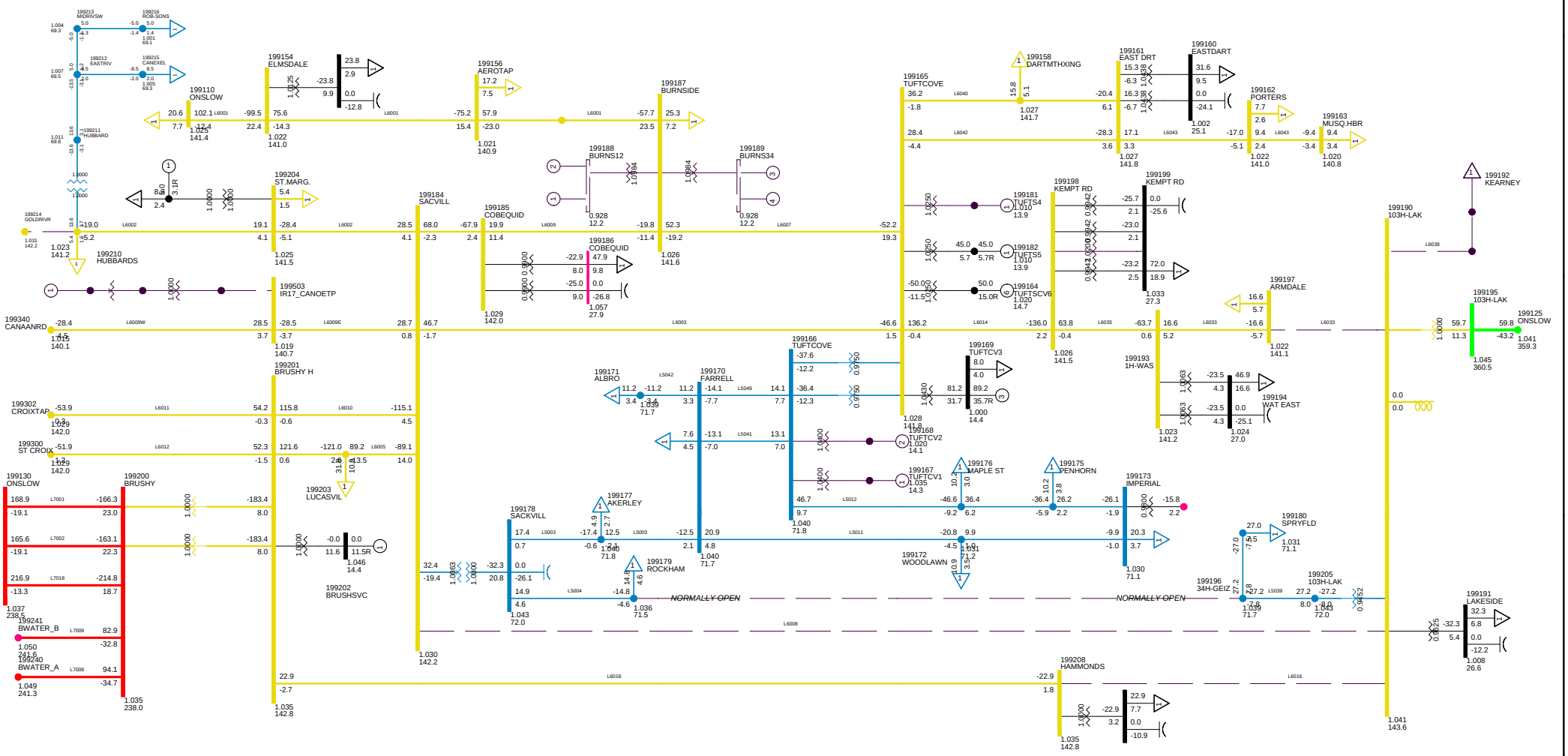

2013 SUMMER PEAK NS EXPORT 300 MW
C34 LOSE 103H-B62
METRO ZONE TUE, DEC 09 2008 23:13

Bus - VOLTAGE (KV/PU)
Branch - MW/MVAR
Equipment - MW/MVAR
100.0%RATEA
1.050OV 0.950UV
KV: <=30.000 <=69.000 <=138.000 <=230.000 <=345.000 >345.000

Figure __

Total Wind Gen: 290.1 MW
Gross Tupper 165.0 MW
Gross Wreck Cove 200.0 MW
Gross Lingan 625.0 MW
Gross Trenton 310.0 MW
Gross Gas Turbine 0.0 MW
Gross Pt Aconi 185.0 MW
Gross Tuft's Cove 229.2 MW
Gross Small Hydro 42.9 MW
Net Stora Load 178.9 MW
Total BMPC Load 108.6 MW

NSX 299.9 MW
CBX 780.3 MW
ONI 1037.4 MW
ONS 692.0 MW

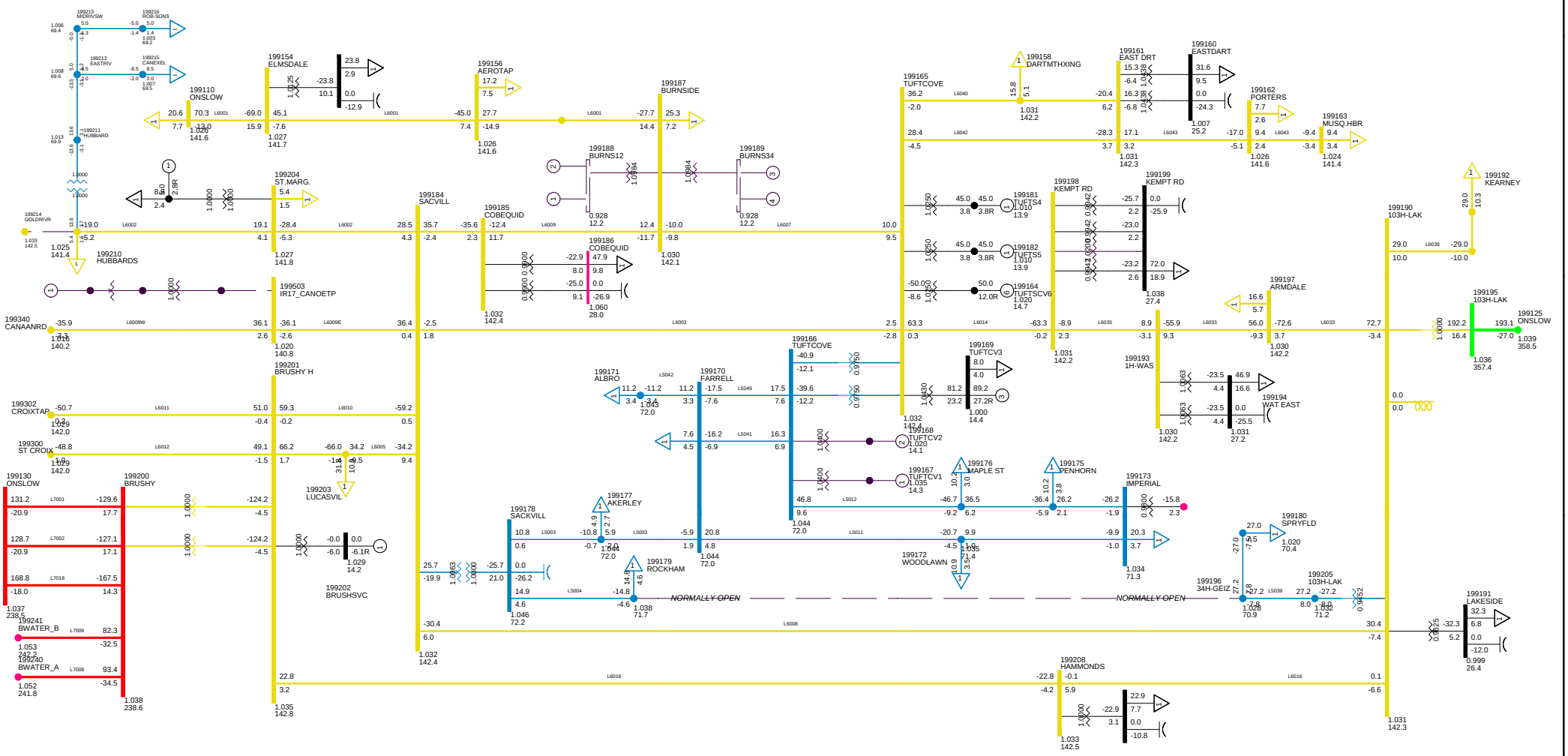

2010 SUMMER PEAK, NSLOAD=1700
NS-NB=+300; NB-NE=1000; CBX=780; ONI=1037 ONS=692
METRO ZONE TUE, DEC 09 2008 23:13

Bus - VOLTAGE (KV/PU)
Branch - MW/MVAR
Equipment - MW/MVAR
100.0%RATEA
1.050OV 0.950UV
KV: <=30.000 <=69.000 <=138.000 <=230.000 <=345.000 >345.000

Figure __

Total Wind Gen: 290.1 MW
Gross Tupper 165.0 MW
Gross Wreck Cove 200.0 MW
Gross Lingan 625.0 MW
Gross Trenton 310.0 MW
Gross Gas Turbine 0.0 MW
Gross Pt Aconi 185.0 MW
Gross Tuft's Cove 229.2 MW
Gross Small Hydro 42.9 MW
Net Stora Load 178.9 MW
Total BMPC Load 108.6 MW

NSX 331.3 MW
CBX 780.4 MW
ONI 1037.5 MW
ONS 660.4 MW

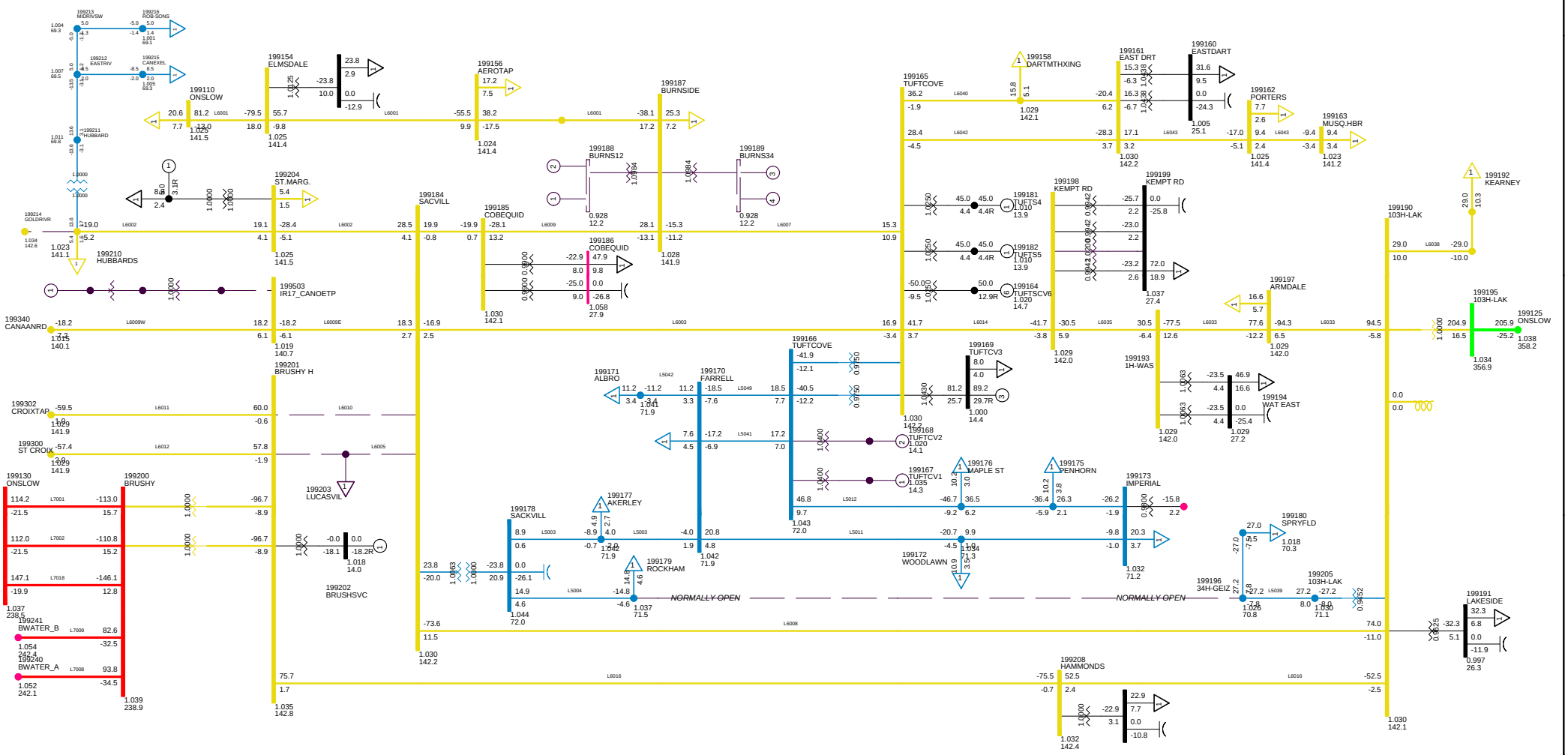

2013 SUMMER PEAK NS EXPORT 300 MW
C35 DCT L6005+L6010
METRO ZONE TUE, DEC 09 2008 23:13

Bus - VOLTAGE (KV/PU)
Branch - MW/MVAR
Equipment - MW/MVAR
100.0%RATEA
1.050OV 0.950UV
KV: <=30.000 <=69.000 <=138.000 <=230.000 <=345.000 >345.000

Figure __

Total Wind Gen: 290.1 MW
Gross Tupper 165.0 MW
Gross Wreck Cove 200.0 MW
Gross Lingan 625.0 MW
Gross Trenton 310.0 MW
Gross Gas Turbine 0.0 MW
Gross Pt Aconi 185.0 MW
Gross Tuft's Cove 229.2 MW
Gross Small Hydro 42.9 MW
Net Stora Load 178.9 MW
Total BMPC Load 108.6 MW

NSX 332.1 MW
CBX 780.4 MW
ONI 1037.4 MW
ONS 659.6 MW

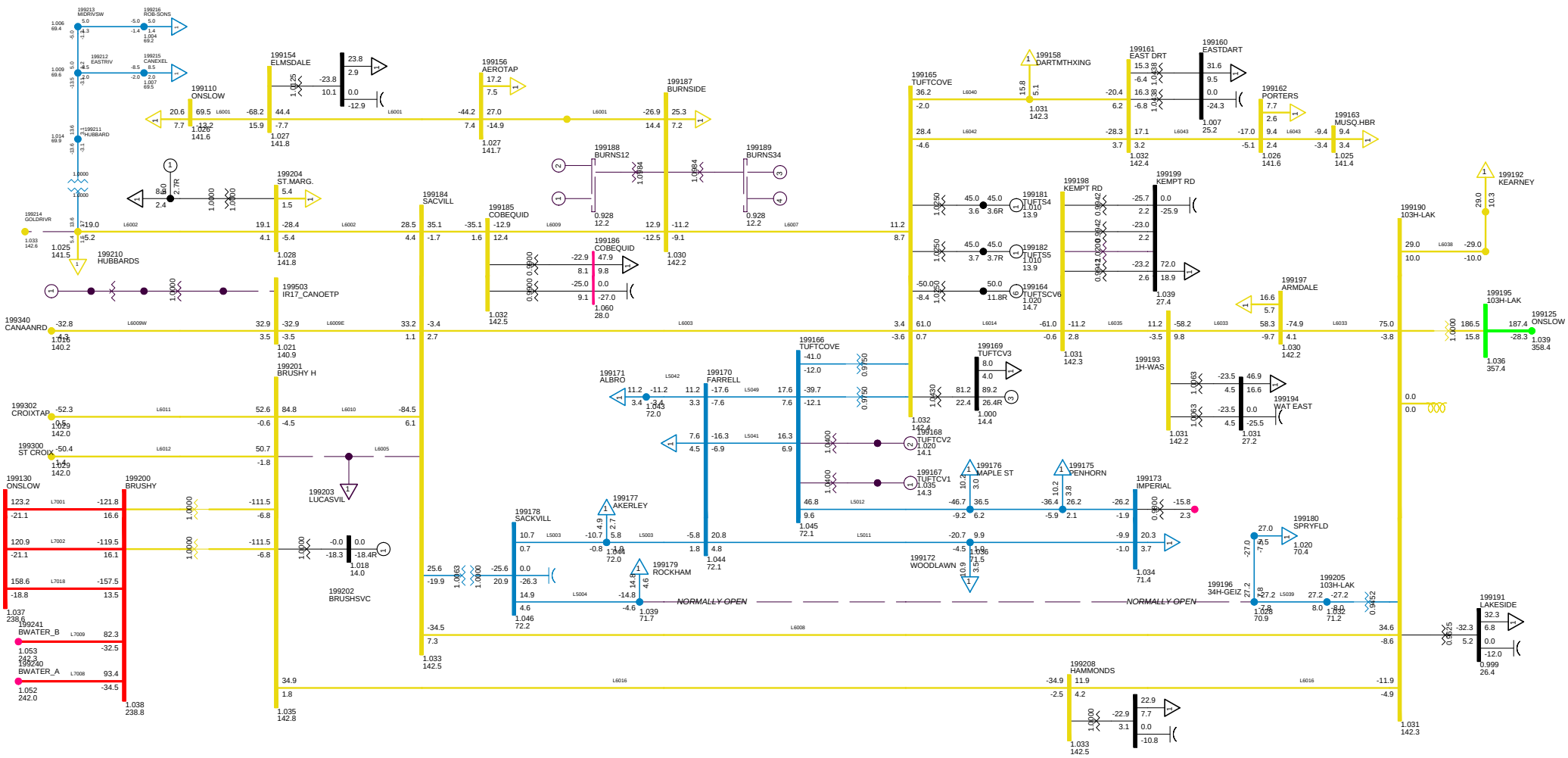

2010 SUMMER PEAK, NSLOAD=1700
NS-NB=+300; NB-NE=1000; CBX=780; ONI=1037 ONS=692
METRO ZONE TUE, DEC 09 2008 23:13

Bus - VOLTAGE (KV/PU)
Branch - MW/MVAR
Equipment - MW/MVAR
100.0%RATEA
1.050OV 0.950UV
KV: <=30.000 <=69.000 <=138.000 <=230.000 <=345.000 >345.000

Figure __

Total Wind Gen: 290.1 MW
Gross Tupper 165.0 MW
Gross Wreck Cove 200.0 MW
Gross Lingan 625.0 MW
Gross Trenton 310.0 MW
Gross Gas Turbine 0.0 MW
Gross Pt Aconi 185.0 MW
Gross Tuft's Cove 229.2 MW
Gross Small Hydro 42.9 MW
Net Stora Load 178.9 MW
Total BMPC Load 108.6 MW

NSX 355.2 MW
CBX 780.4 MW
ONI 1037.5 MW
ONS 636.3 MW

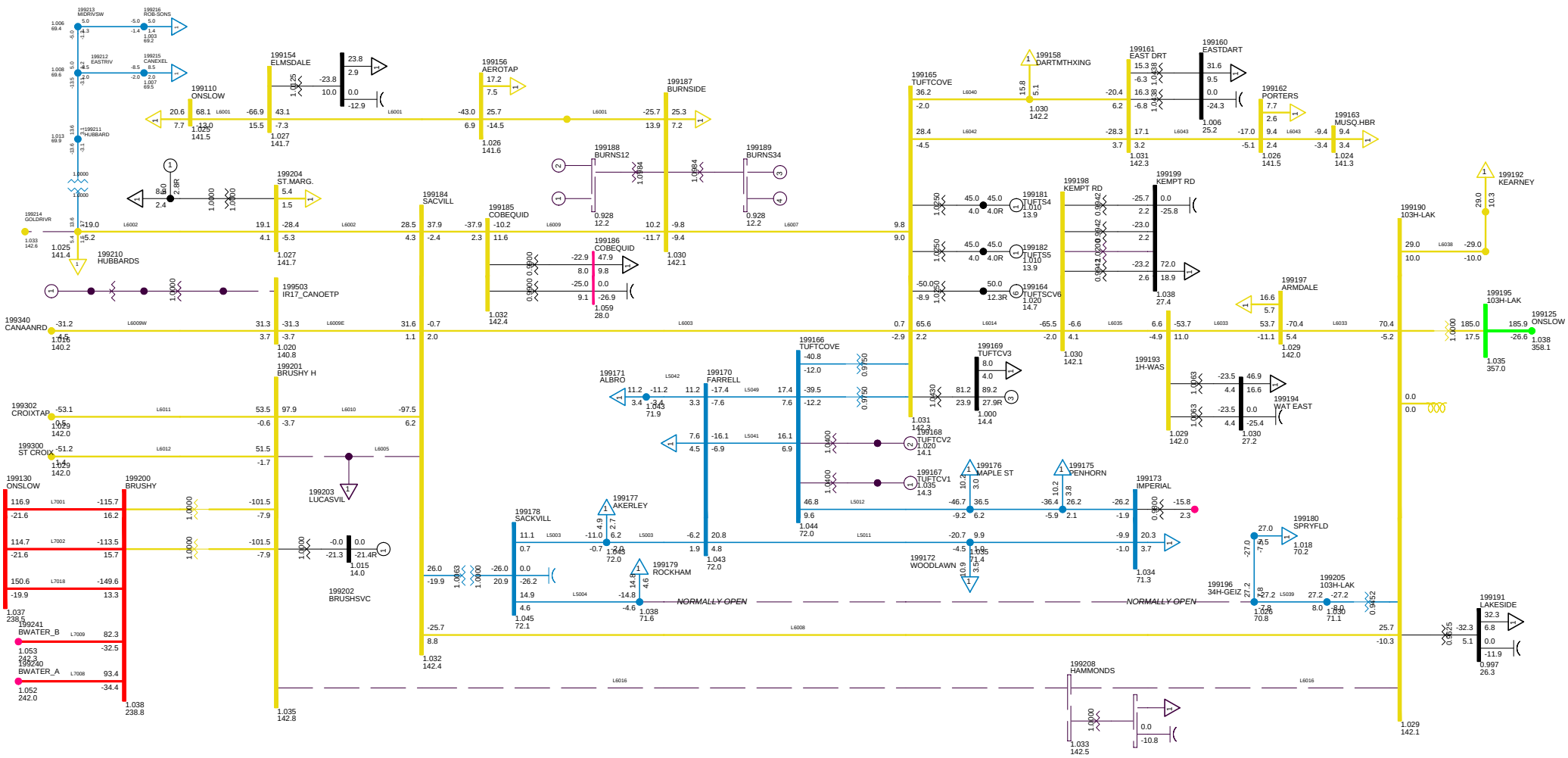

2013 SUMMER PEAK NS EXPORT 300 MW
C37 DCT L6005 L6016
METRO ZONE TUE, DEC 09 2008 23:13

Bus - VOLTAGE (KV/PU)
Branch - MW/MVAR
Equipment - MW/MVAR
100.0%RATEA
1.050OV 0.950UV
KV: <=30.000 <=69.000 <=138.000 <=230.000 <=345.000 >345.000

Figure __

Total Wind Gen: 290.1 MW | Gross Tupper 165.0 MW | Gross Wreck Cove 200.0 MW

Gross Lingan 625.0 MW | Gross Trenton 310.0 MW | Gross Gas Turbine 0.0 MW

Gross Pt Aconi 185.0 MW | Gross Tuft's Cove 229.2 MW | Gross Small Hydro 42.9 MW

Net Stora Load 178.9 MW | Total BMPC Load 108.6 MW

NSX 348.8 MW

CBX 780.4 MW

ONI 1037.5 MW

ONS 642.7 MW

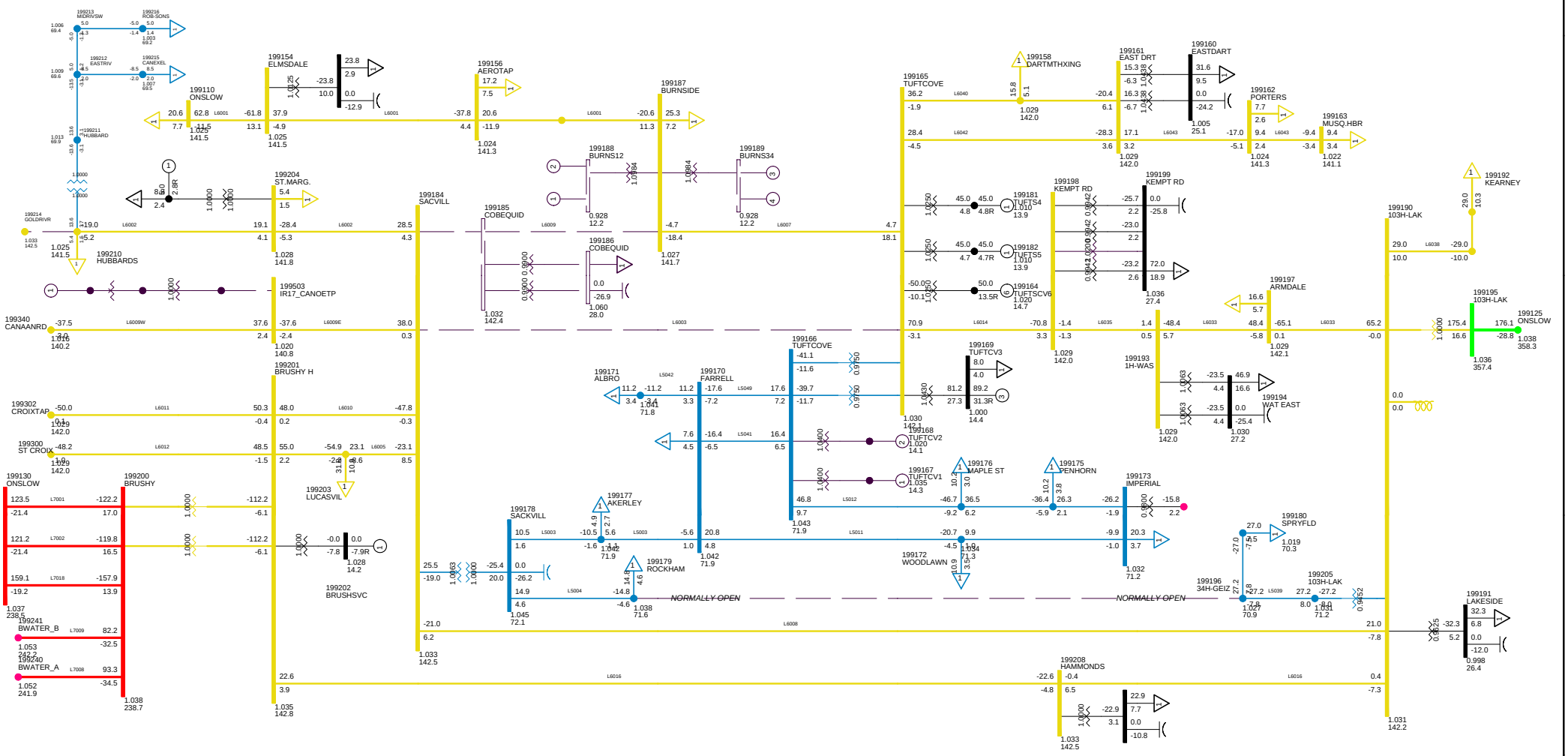

2013 SUMMER PEAK NS EXPORT 300 MW
C38 DCT L6003 L6009
METRO ZONE TUE, DEC 09 2008 23:13

Bus - VOLTAGE (KV/PU)
Branch - MW/MVAR
Equipment - MW/MVAR
100.0%RATEA
1.050OV 0.950UV
KV: <=30.000 <=69.000 <=138.000 <=230.000 <=345.000 >345.000

Figure __

Total Wind Gen: 290.1 MW | Gross Tupper 165.0 MW | Gross Wreck Cove 200.0 MW

Gross Lingan 625.0 MW | Gross Trenton 310.0 MW | Gross Gas Turbine 0.0 MW

Gross Pt Aconi 185.0 MW | Gross Tuft's Cove 229.2 MW | Gross Small Hydro 42.9 MW

Net Stora Load 178.9 MW | Total BMPC Load 108.6 MW

NSX 299.9 MW

CBX 780.3 MW

ONI 1037.4 MW

ONS 692.0 MW

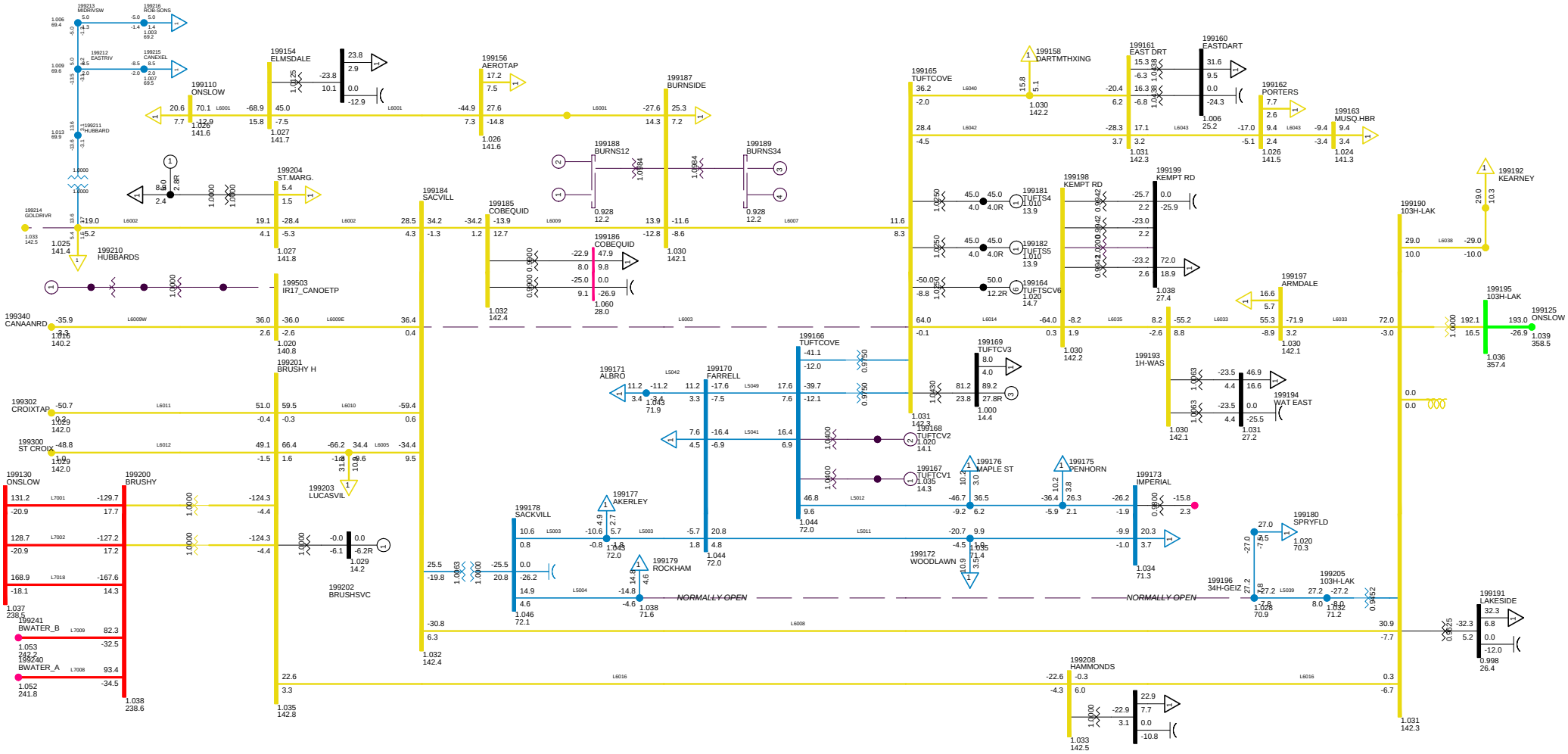

2013 SUMMER PEAK NS EXPORT 300 MW
C39 DCT L6003 L6007
METRO ZONE TUE, DEC 09 2008 23:13

Bus - VOLTAGE (KV/PU)
Branch - MW/MVAR
Equipment - MW/MVAR
100.0%RATEA
1.050OV 0.950UV
KV: <=30.000 <=69.000 <=138.000 <=230.000 <=345.000 >345.000

Figure __

Total Wind Gen: 259.5 MW | Gross Tupper 165.0 MW | Gross Wreck Cove 200.0 MW

Gross Lingan 625.0 MW | Gross Trenton 310.0 MW | Gross Gas Turbine 0.0 MW

Gross Pt Aconi 185.0 MW | Gross Tuft's Cove 229.2 MW | Gross Small Hydro 23.9 MW

Net Stora Load 178.9 MW | Total BMPC Load 0.0 MW

NSX 481.5 MW

CBX 780.4 MW

ONI 1037.6 MW

ONS 508.7 MW

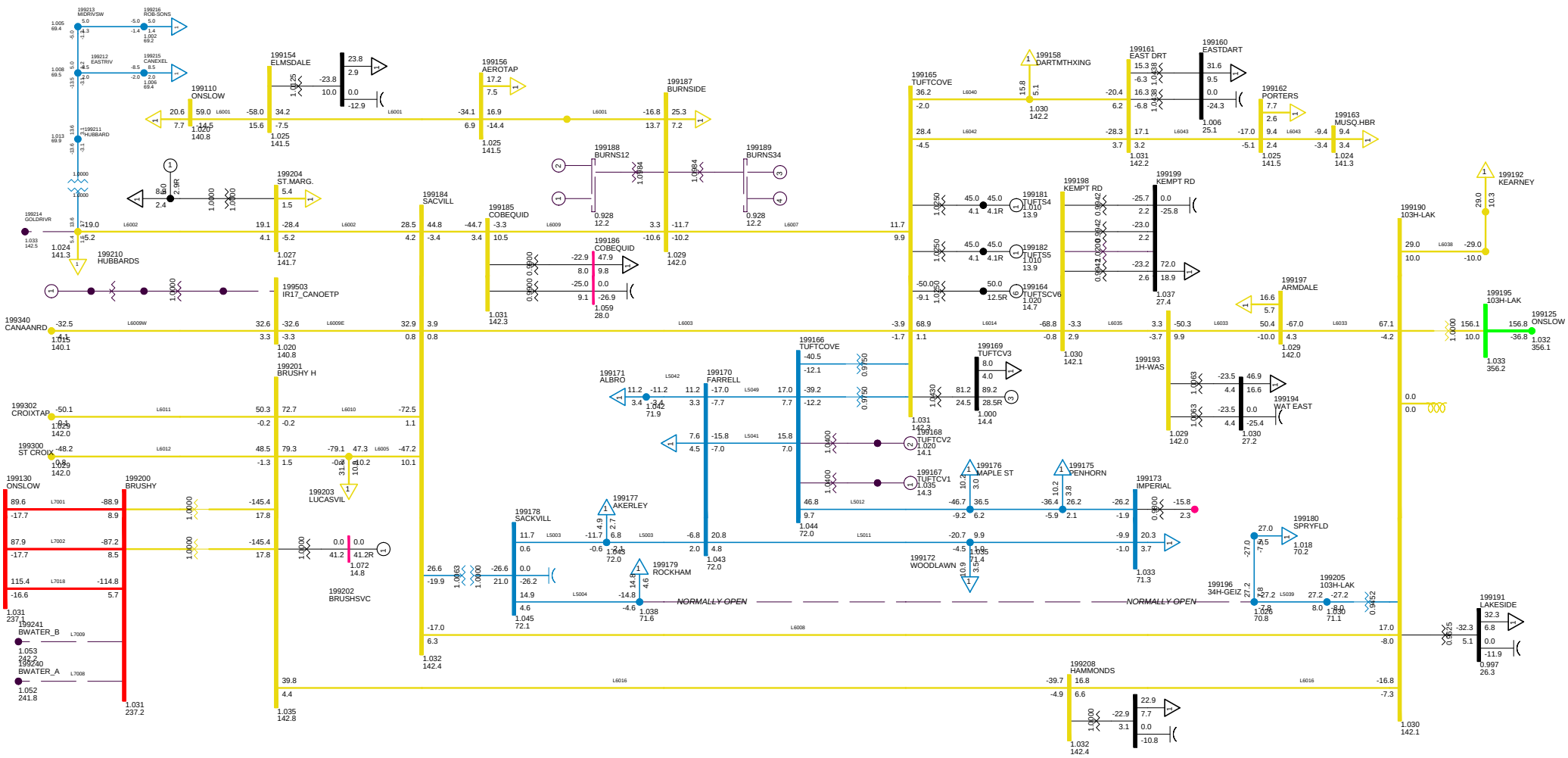

2013 SUMMER PEAK NS EXPORT 300 MW
C40 DCT L7008 L7009 ISOLATES WEST
METRO ZONE TUE, DEC 09 2008 23:14

Bus - VOLTAGE (KV/PU)
Branch - MW/MVAR
Equipment - MW/MVAR
100.0%RATEA
1.050OV 0.950UV
KV: <=30.000 <=69.000 <=138.000 <=230.000 <=345.000 >345.000

Figure __

Total Wind Gen: 290.1 MW
Gross Tupper 165.0 MW
Gross Wreck Cove 200.0 MW
Gross Lingan 625.0 MW
Gross Trenton 310.0 MW
Gross Gas Turbine 0.0 MW
Gross Pt Aconi 185.0 MW
Gross Tuft's Cove 229.2 MW
Gross Small Hydro 42.9 MW
Net Stora Load 178.9 MW
Total BMPC Load 108.6 MW

NSX 355.2 MW
CBX 780.4 MW
ONI 1037.5 MW
ONS 636.3 MW

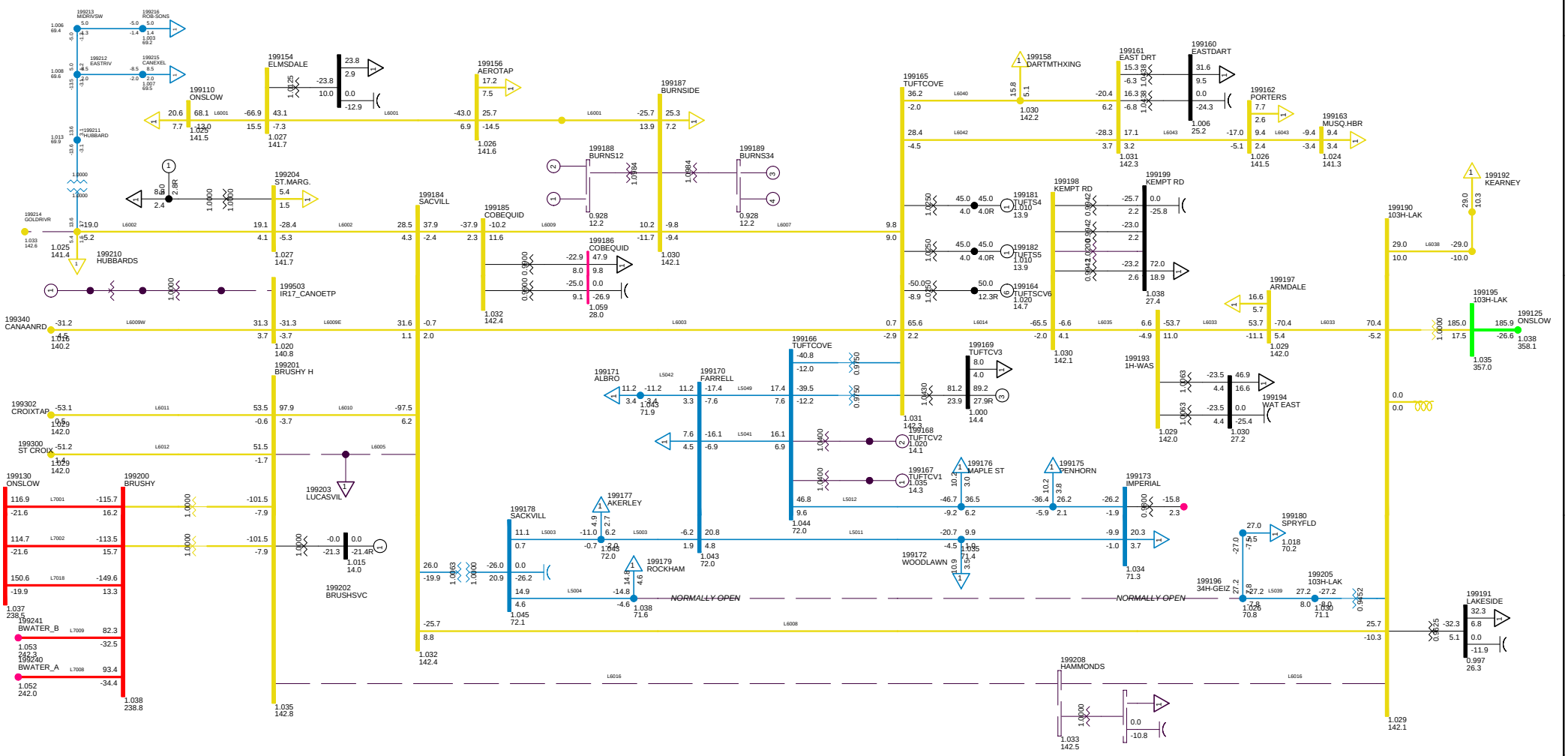

2013 SUMMER PEAK NS EXPORT 300 MW
C41 1P FAULT ON L6016, BBU 622
METRO ZONE TUE, DEC 09 2008 23:14

Bus - VOLTAGE (KV/PU)
Branch - MW/MVAR
Equipment - MW/MVAR
100.0%RATEA
1.050OV 0.950UV
KV: <=30.000 <=69.000 <=138.000 <=230.000 <=345.000 >345.000

Figure __

Total Wind Gen: 290.1 MW | Gross Tupper 165.0 MW | Gross Wreck Cove 200.0 MW

Gross Lingan 625.0 MW | Gross Trenton 310.0 MW | Gross Gas Turbine 0.0 MW

Gross Pt Aconi 185.0 MW | Gross Tuft's Cove 229.2 MW | Gross Small Hydro 42.9 MW

Net Stora Load 178.9 MW | Total BMPC Load 108.6 MW

NSX 338.9 MW

CBX 780.1 MW

ONI 1036.8 MW

ONS 652.4 MW

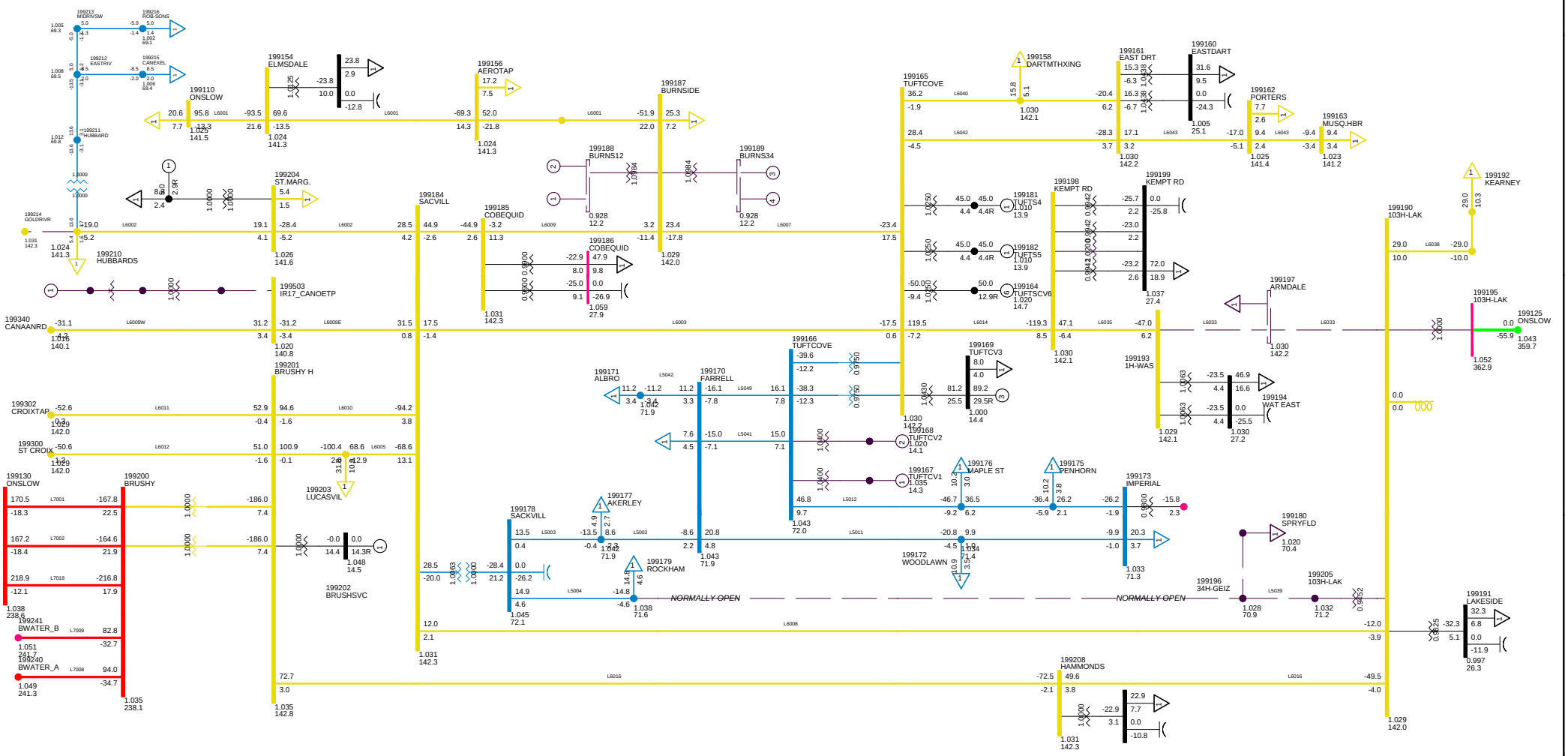

2013 SUMMER PEAK NS EXPORT 300 MW
C42 1P L6033, BBU 103H-632
METRO ZONE TUE, DEC 09 2008 23:14

Bus - VOLTAGE (KV/PU)
Branch - MW/MVAR
Equipment - MW/MVAR
100.0%RATEA
1.050OV 0.950UV
KV: <=30.000 <=69.000 <=138.000 <=230.000 <=345.000 >345.000

Figure __

Total Wind Gen: 290.1 MW | Gross Tupper 165.0 MW | Gross Wreck Cove 200.0 MW

Gross Lingan 625.0 MW | Gross Trenton 310.0 MW | Gross Gas Turbine 0.0 MW

Gross Pt Aconi 185.0 MW | Gross Tuft's Cove 229.2 MW | Gross Small Hydro 42.9 MW

Net Stora Load 178.9 MW | Total BMPC Load 108.6 MW

NSX 331.3 MW

CBX 780.4 MW

ONI 1037.5 MW

ONS 660.4 MW

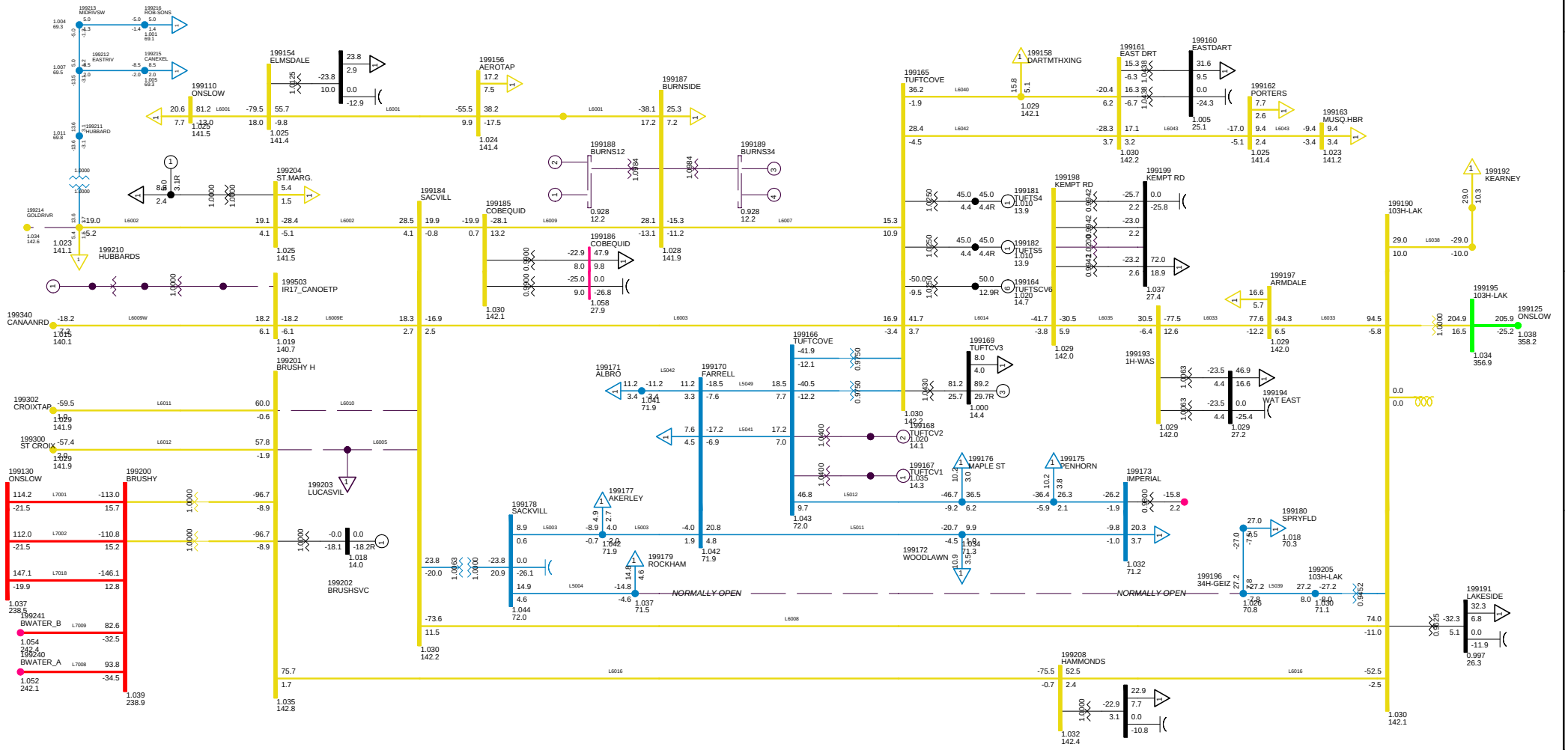

2013 SUMMER PEAK NS EXPORT 300 MW
C43 BBU L6005 L6010 90H-608
METRO ZONE TUE, DEC 09 2008 23:14

Bus - VOLTAGE (KV/PU)
Branch - MW/MVAR
Equipment - MW/MVAR
100.0%RATEA
1.050OV 0.950UV
KV: <=30.000 <=69.000 <=138.000 <=230.000 <=345.000 >345.000

Figure __

Total Wind Gen: 290.1 MW | Gross Tupper 165.0 MW | Gross Wreck Cove 200.0 MW

Gross Lingan 625.0 MW | Gross Trenton 310.0 MW | Gross Gas Turbine 0.0 MW

Gross Pt Aconi 185.0 MW | Gross Tuft's Cove 229.2 MW | Gross Small Hydro 42.9 MW

Net Stora Load 178.9 MW | Total BMPC Load 108.6 MW

NSX 348.6 MW

CBX 780.3 MW

ONI 1037.4 MW

ONS 642.9 MW

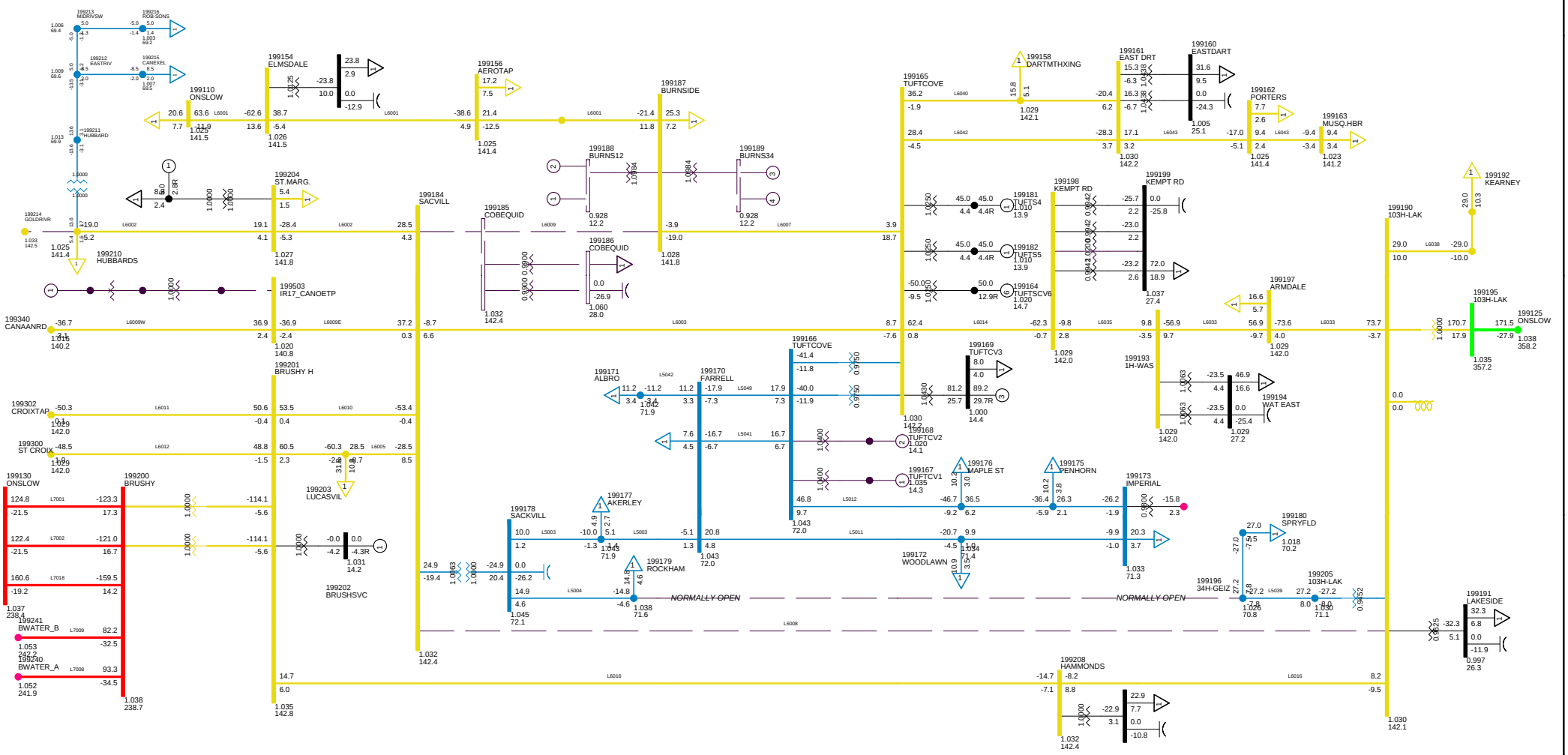

2013 SUMMER PEAK NS EXPORT 300 MW
C44 BBU L6008 L6009 90H-611
METRO ZONE TUE, DEC 09 2008 23:14

Bus - VOLTAGE (KV/PU)
Branch - MW/MVAR
Equipment - MW/MVAR
100.0%RATEA
1.050OV 0.950UV
KV: <=30.000 <=69.000 <=138.000 <=230.000 <=345.000 >345.000

Figure __

Total Wind Gen: 290.1 MW | Gross Tupper 165.0 MW | Gross Wreck Cove 200.0 MW

Gross Lingan 625.0 MW | Gross Trenton 310.0 MW | Gross Gas Turbine 0.0 MW

Gross Pt Aconi 185.0 MW | Gross Tuft's Cove 89.2 MW | Gross Small Hydro 42.9 MW

Net Stora Load 178.9 MW | Total BMPC Load 108.5 MW

NSX 241.5 MW

CBX 780.3 MW

ONI 1037.2 MW

ONS 750.6 MW

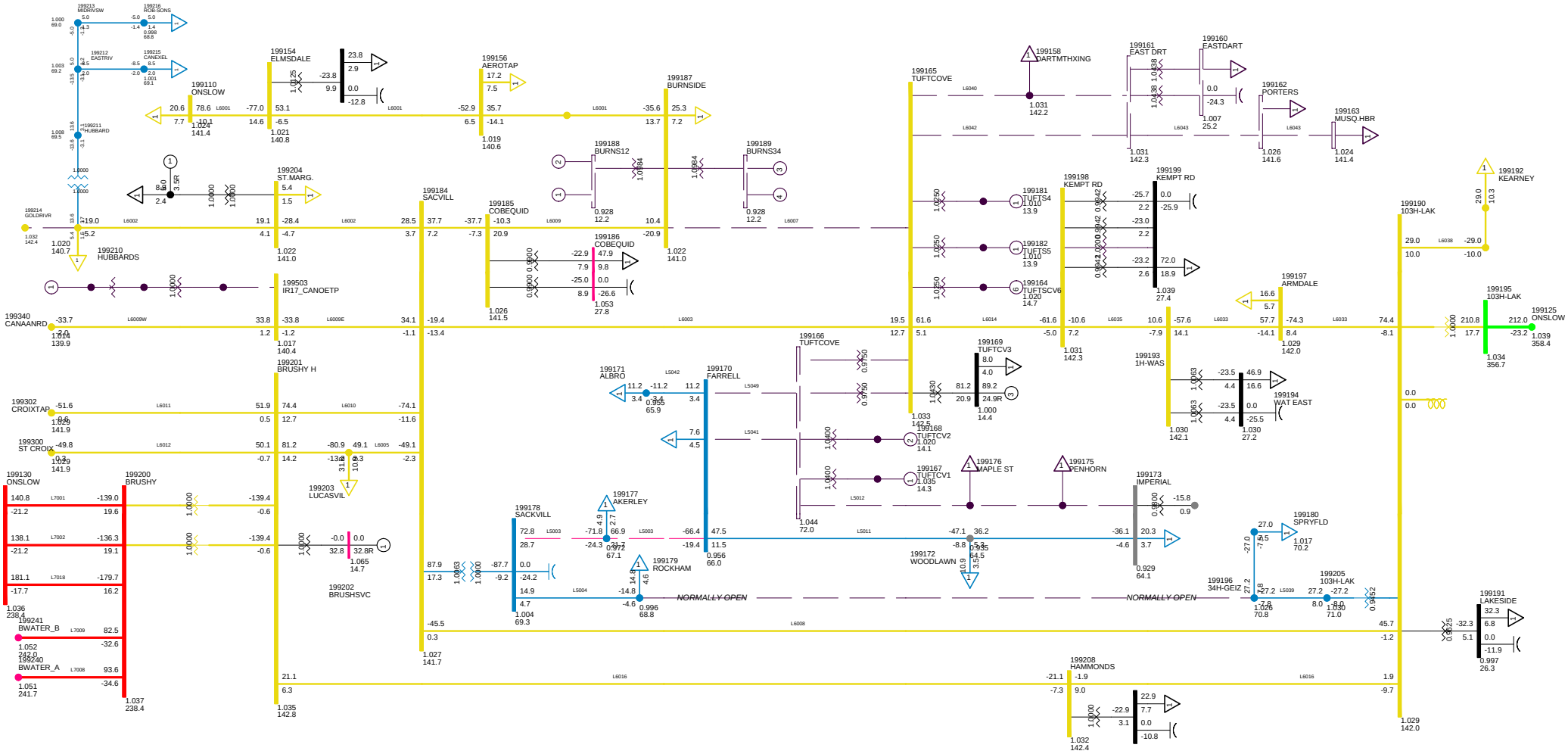

2013 SUMMER PEAK NS EXPORT 300 MW
C45 BBU ON 91H-523
METRO ZONE TUE, DEC 09 2008 23:14

Bus - VOLTAGE (KV/PU)
Branch - MW/MVAR
Equipment - MW/MVAR
100.0%RATEA
1.050OV 0.950UV
KV: <=30.000 <=69.000 <=138.000 <=230.000 <=345.000 >345.000

Figure __

Total Wind Gen: 290.1 MW | Gross Tupper 165.0 MW | Gross Wreck Cove 200.0 MW

Gross Lingan 625.0 MW | Gross Trenton 310.0 MW | Gross Gas Turbine 0.0 MW

Gross Pt Aconi 185.0 MW | Gross Tuft's Cove 229.2 MW | Gross Small Hydro 42.9 MW

Net Stora Load 178.9 MW | Total BMPC Load 108.5 MW

NSX 374.5 MW

CBX 780.4 MW

ONI 1037.5 MW

ONS 616.7 MW

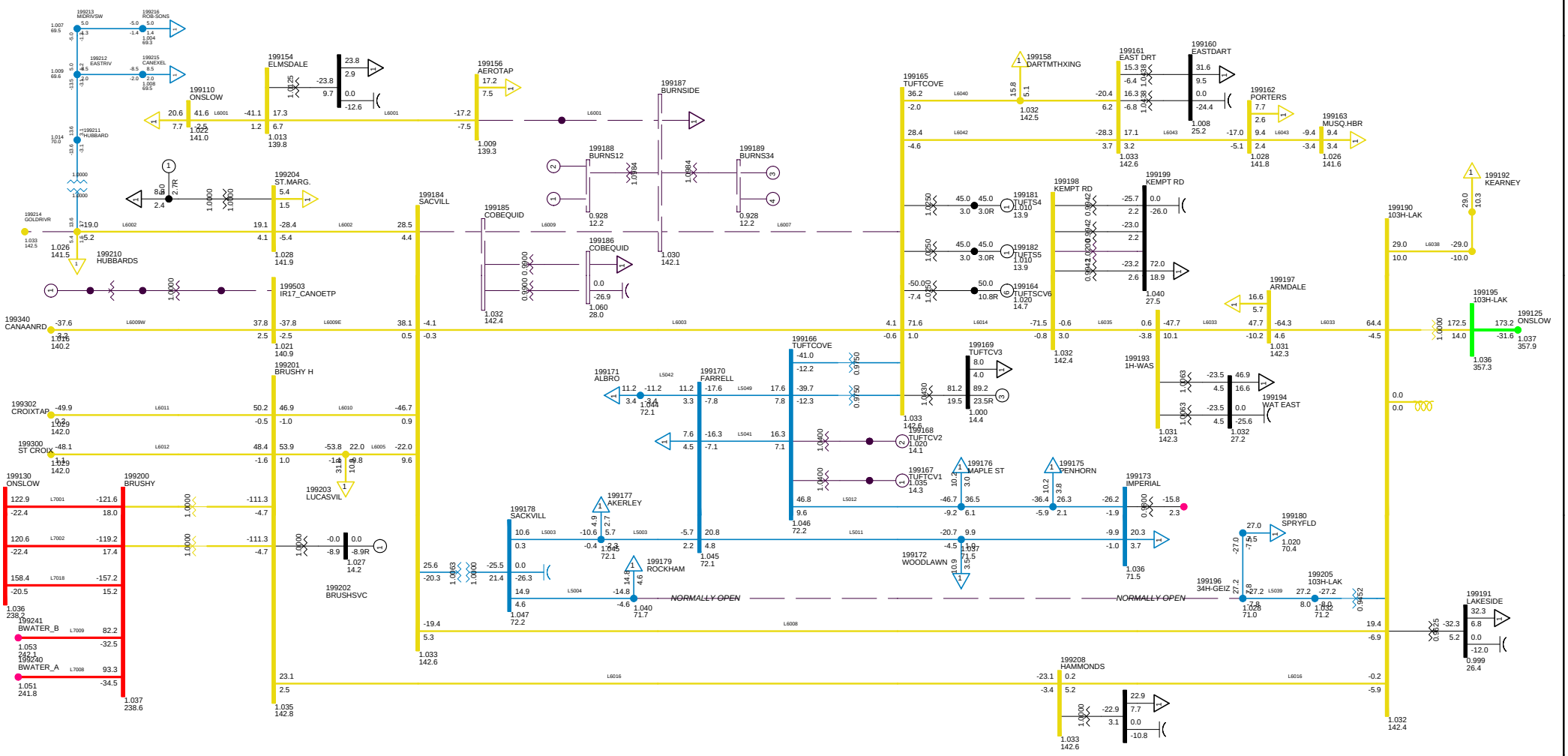

2013 SUMMER PEAK NS EXPORT 300 MW
C46 1P L6009 BBU ON 108H 607
METRO ZONE TUE, DEC 09 2008 23:14

Bus - VOLTAGE (KV/PU)
Branch - MW/MVAR
Equipment - MW/MVAR
100.0%RATEA
1.050OV 0.950UV
KV: <=30.000 <=69.000 <=138.000 <=230.000 <=345.000 >345.000

Figure __

Total Wind Gen: 290.1 MW
Gross Tupper 165.0 MW
Gross Wreck Cove 200.0 MW
Gross Lingan 625.0 MW
Gross Trenton 310.0 MW
Gross Gas Turbine 0.0 MW
Gross Pt Aconi 185.0 MW
Gross Tuft's Cove 229.2 MW
Gross Small Hydro 42.9 MW
Net Stora Load 178.9 MW
Total BMPC Load 108.6 MW

NSX 384.9 MW
CBX 780.2 MW
ONI 1036.9 MW
ONS 606.2 MW

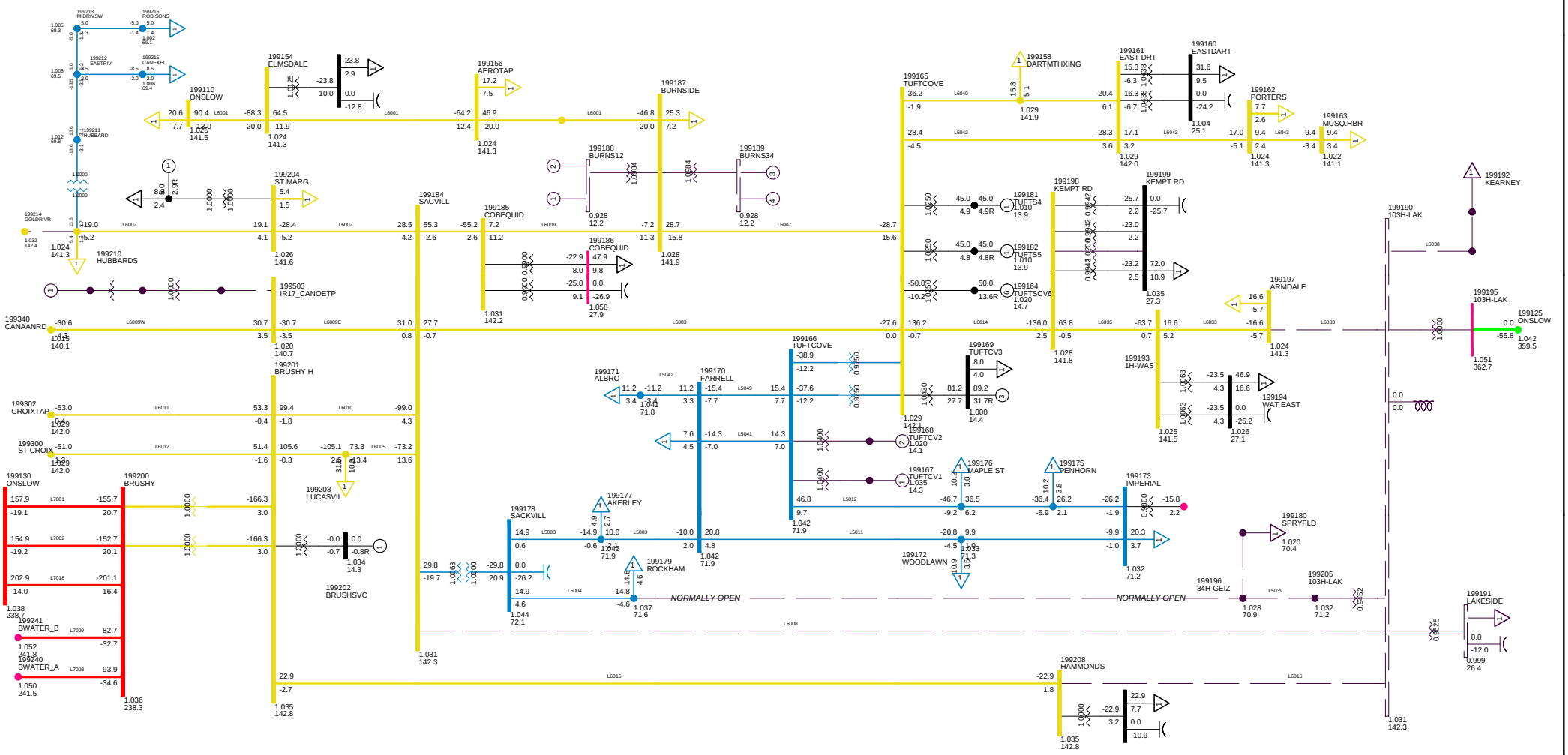

2013 SUMMER PEAK NS EXPORT 300 MW
C47 1P 103H-600
METRO ZONE TUE, DEC 09 2008 23:15

Bus - VOLTAGE (KV/PU)
Branch - MW/MVAR
Equipment - MW/MVAR
100.0%RATEA
1.050OV 0.950UV
KV: <=30.000 <=69.000 <=138.000 <=230.000 <=345.000 >345.000

Figure __

Total Wind Gen: 290.1 MW | Gross Tupper 165.0 MW | Gross Wreck Cove 200.0 MW

Gross Lingan 625.0 MW | Gross Trenton 310.0 MW | Gross Gas Turbine 0.0 MW

Gross Pt Aconi 185.0 MW | Gross Tuft's Cove 229.2 MW | Gross Small Hydro 42.9 MW

Net Stora Load 178.9 MW | Total BMPC Load 108.6 MW

NSX 299.6 MW

CBX 780.3 MW

ONI 1037.4 MW

ONS 692.2 MW

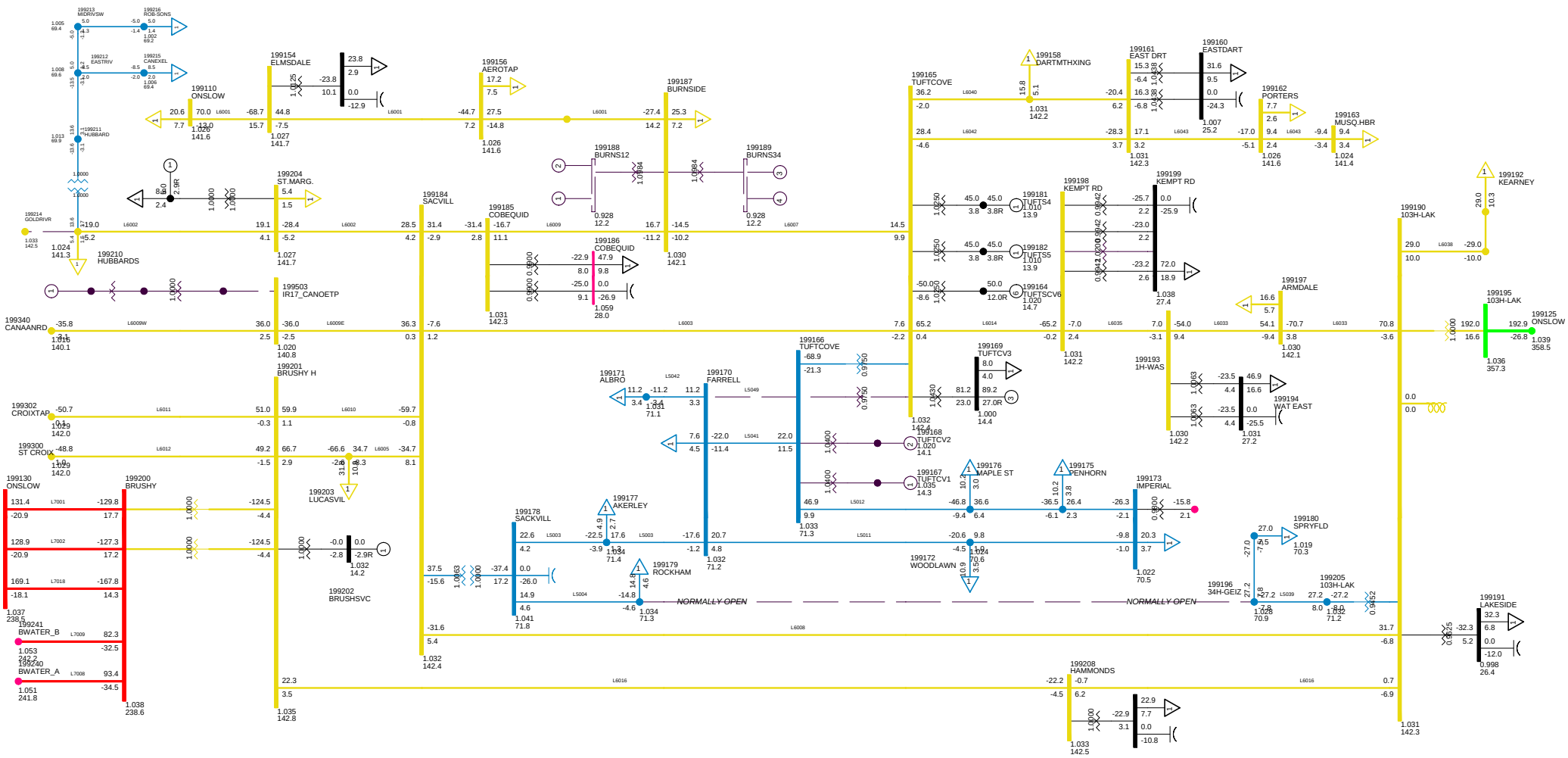

2013 SUMMER PEAK NS EXPORT 300 MW
C48 1P ON BREAKER 91H-523
METRO ZONE TUE, DEC 09 2008 23:15

Bus - VOLTAGE (KV/PU)
Branch - MW/MVAR
Equipment - MW/MVAR
100.0%RATEA
1.050OV 0.950UV
KV: <=30.000 <=69.000 <=138.000 <=230.000 <=345.000 >345.000

Figure __

Total Wind Gen: 290.1 MW
Gross Tupper 165.0 MW
Gross Wreck Cove 200.0 MW
Gross Lingan 625.0 MW
Gross Trenton 310.0 MW
Gross Gas Turbine 0.0 MW
Gross Pt Aconi 185.0 MW
Gross Tuft's Cove 229.2 MW
Gross Small Hydro 42.9 MW
Net Stora Load 178.9 MW
Total BMPC Load 108.6 MW

NSX 373.2 MW
CBX 780.4 MW
ONI 1037.5 MW
ONS 618.1 MW

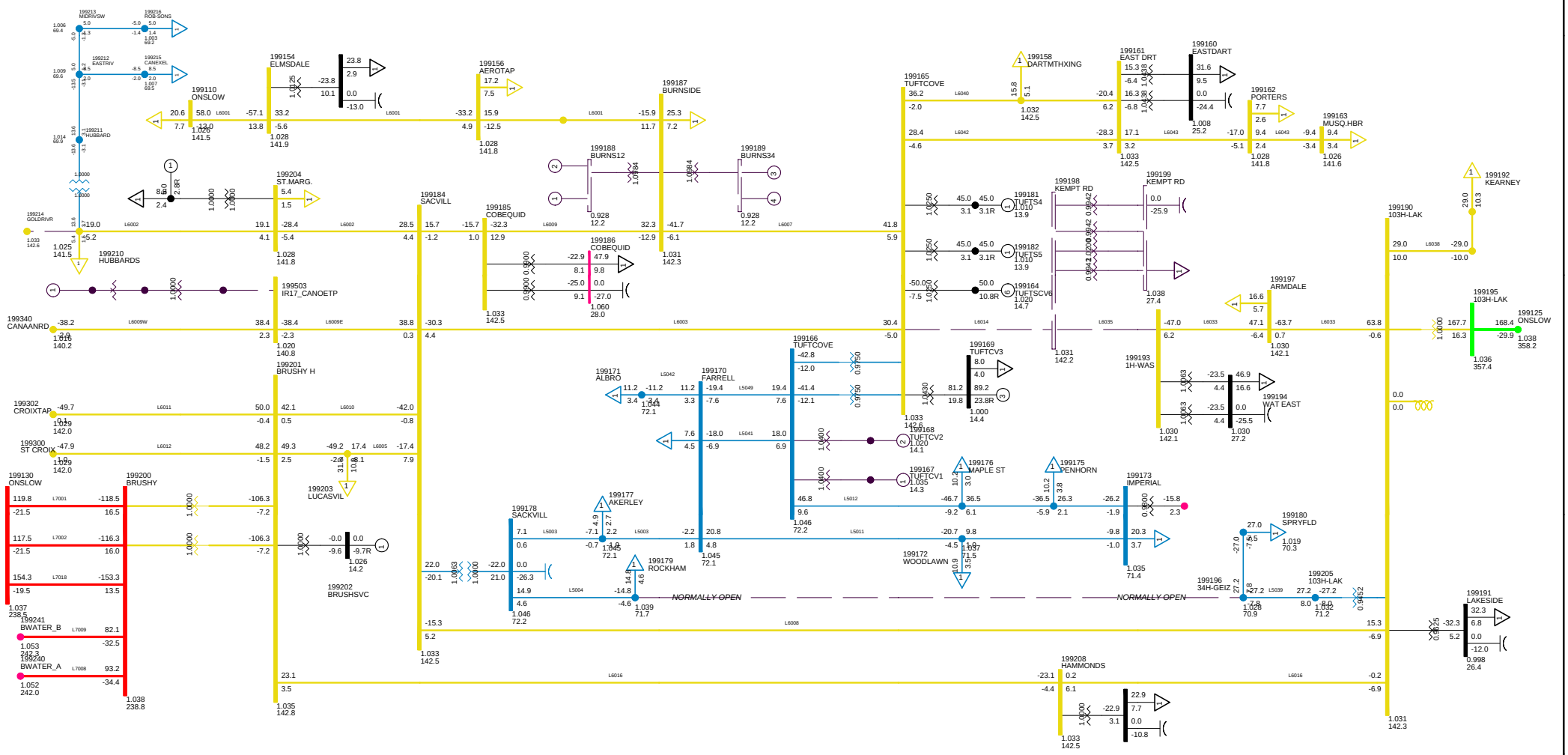

2013 SUMMER PEAK NS EXPORT 300 MW
C49 1-PH ON 104H-600
METRO ZONE TUE, DEC 09 2008 23:15

Bus - VOLTAGE (KV/PU)
Branch - MW/MVAR
Equipment - MW/MVAR
100.0%RATEA
1.050OV 0.950UV
KV: <=30.000 <=69.000 <=138.000 <=230.000 <=345.000 >345.000

Figure __

NSX 299.9 MW

CBX 780.3 MW

ONI 1037.4 MW

ONS 692.0 MW

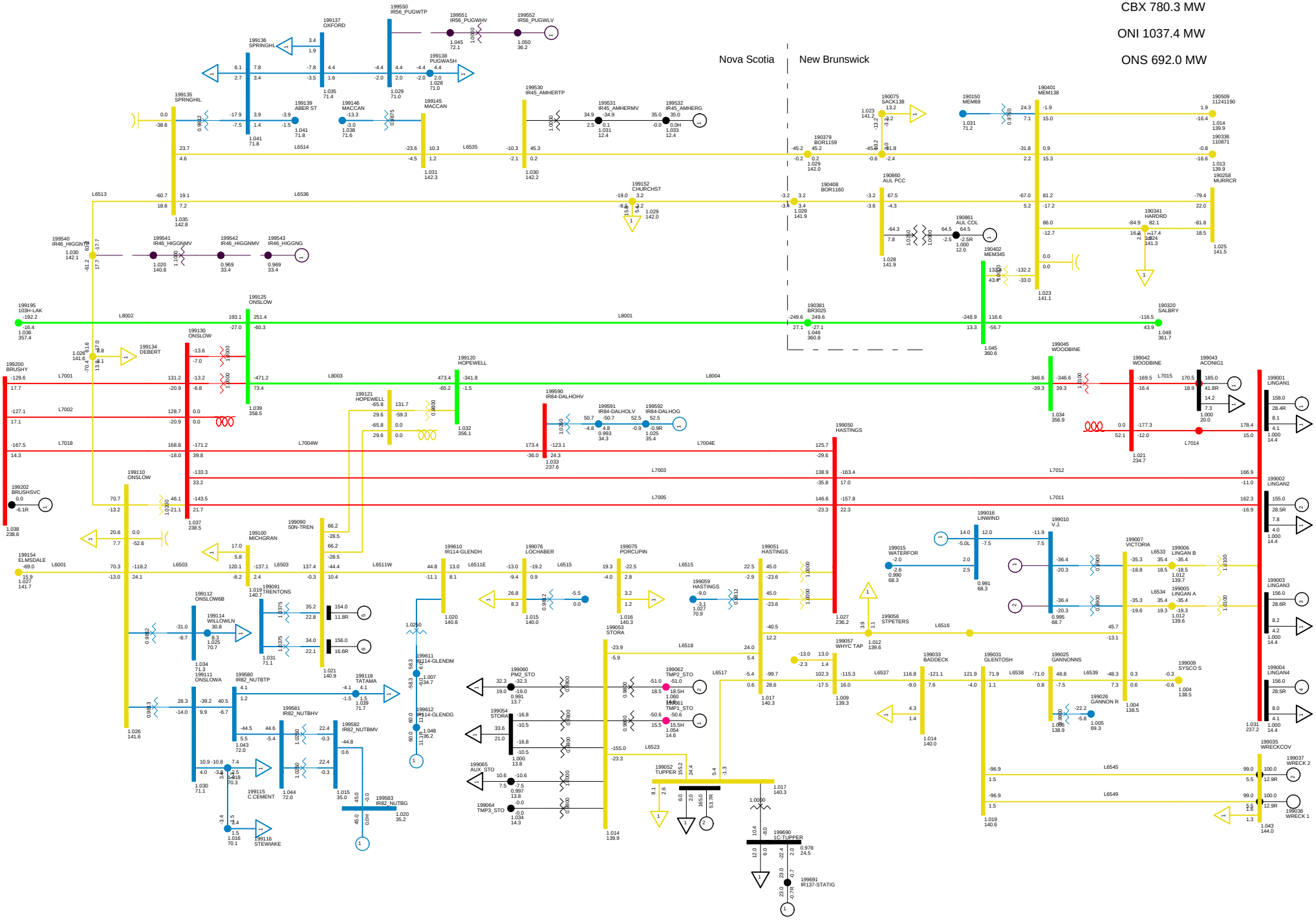

2010 SUMMER PEAK, NSLOAD=1700
NS-NB=+300; NB-NE=1000; CBX=780; ONI=1037 ONS=692
NORTHEASTERN NS TUE, DEC 09 2008 23:15

Total Wind Gen: 290.1 MW
Gross Lingan 625.0 MW
Gross Pt Aconi 185.0 MW
Gross Tupper 165.0 MW
Gross Trenton 310.0 MW
Gross Tuft's Cove 229.2 MW
Gross Wreck Cove 200.0 MW
Gross Gas Turbine 0.0 MW
Gross Small Hydro 42.9 MW
Net Stora Load 178.9 MW
Total BMPC Load 108.6 MW

Bus - VOLTAGE (KV/PU)
Branch - MW/MVAR
Equipment - MW/MVAR
110.0%RATEA
1.050OV 0.950UV
KV: <=25.000 <=69.000 <=138.000 <=230.000 <=345.000 >345.000

Figure ___

NSX 121.6 MW
CBX 620.9 MW
ONI 861.0 MW
ONS 693.7 MW

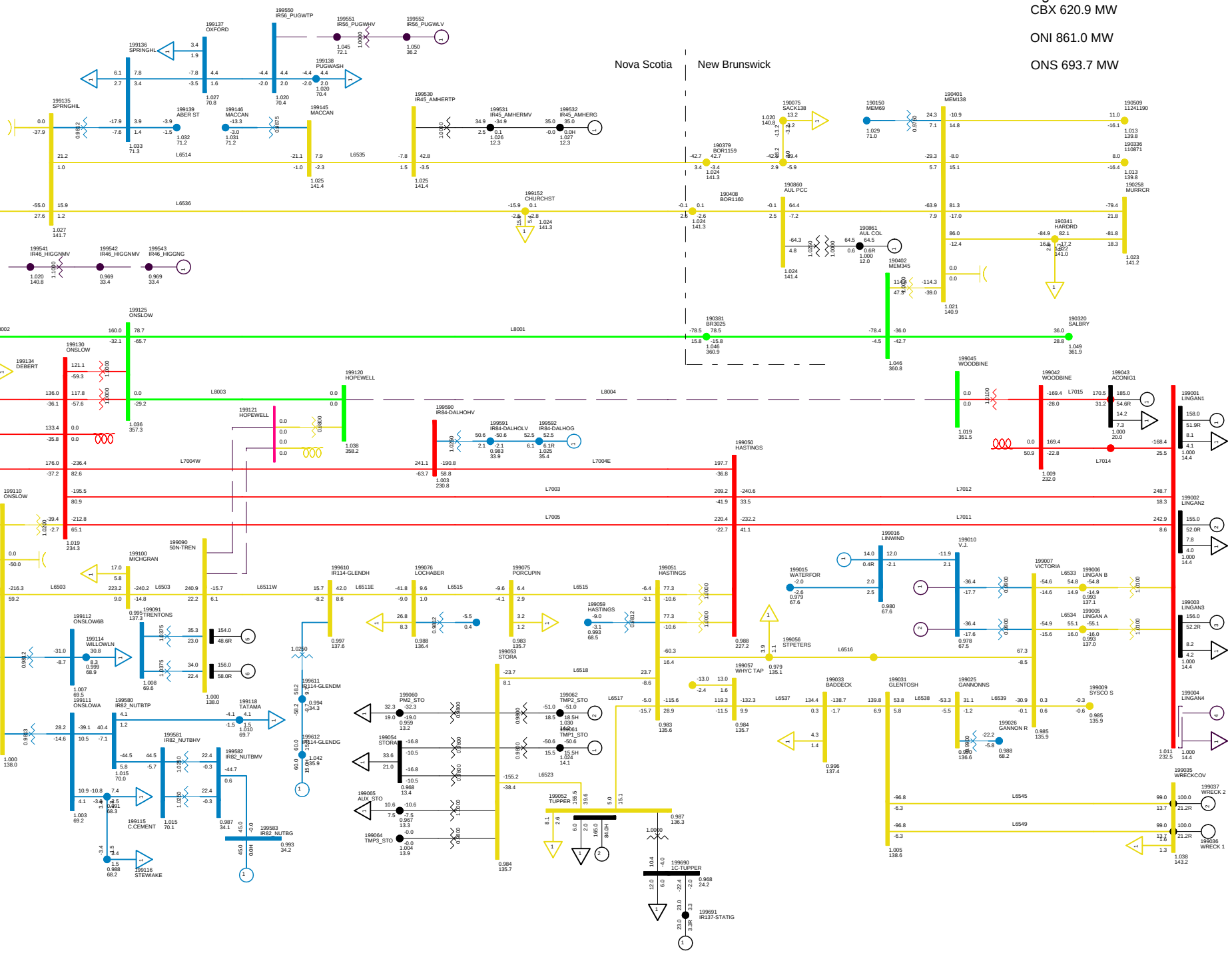

2013 SUMMER PEAK NS EXPORT 300 MW
C50 1P FAULT ON L6507, BBU 79N-606
NORTHEASTERN NS TUE, DEC 09 2008 23:15

Total Wind Gen: 290.1 MW
Gross Lingan 469.0 MW
Gross Pt Aconi 185.0 MW
Gross Tupper 165.0 MW
Gross Trenton 310.0 MW
Gross Tuft's Cove 229.2 MW
Gross Wreck Cove 200.0 MW
Gross Gas Turbine 0.0 MW
Gross Small Hydro 42.9 MW
Total Stora Load 179.0 MW
Total BMPC Load 108.6 MW

Bus - VOLTAGE (KV/PU)
Branch - MW/MVAR
Equipment - MW/MVAR
110.0%RATEA
1.050OV 0.950UV
KV: <=25.000 <=69.000 <=138.000 <=230.000 <=345.000 >345.000

Figure ___

NSX 321.6 MW
CBX 780.0 MW
ONI 1035.4 MW
ONS 692.9 MW

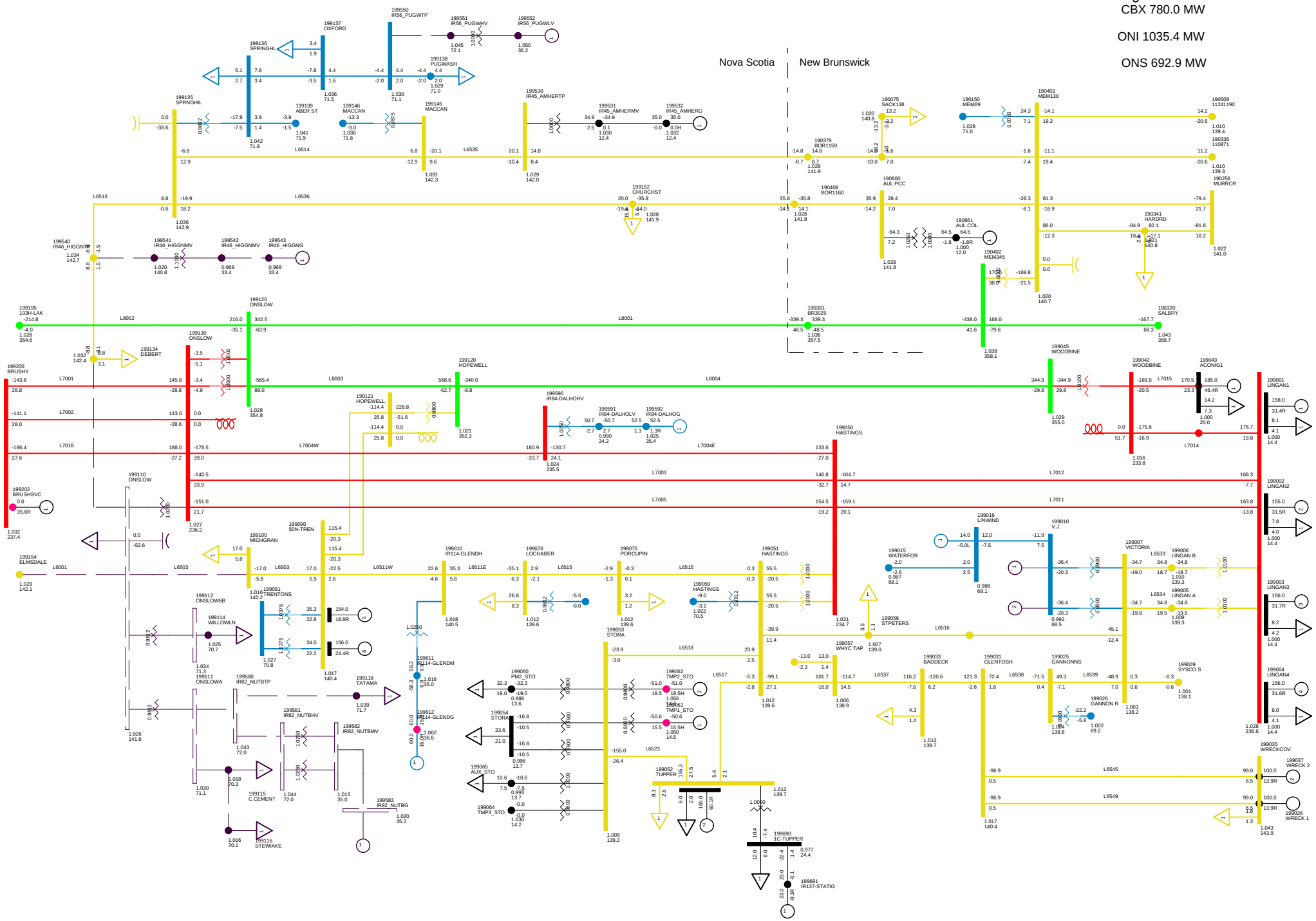

2013 SUMMER PEAK NS EXPORT 300 MW
C51 1P FAULT ON 1N BUS 61
NORTHEASTERN NS TUE, DEC 09 2008 23:15

Total Wind Gen: 245.1 MW | Gross Tupper 165.0 MW | Gross Wreck Cove 200.0 MW | Net Stora Load 178.9 MW
Gross Lingan 625.0 MW | Gross Trenton 310.0 MW | Gross Gas Turbine 0.0 MW | Total BMPC Load 108.6 MW
Gross Pt Aconi 185.0 MW | Gross Tuft's Cove 229.2 MW | Gross Small Hydro 42.9 MW

Bus - VOLTAGE (KV/PU)
Branch - MW/MVAR
Equipment - MW/MVAR
110.0%RATEA
1.050OV 0.950UV
KV: <=25.000 <=69.000 <=138.000 <=230.000 <=345.000 >345.000

Figure ___

NSX 347.9 MW
CBX 831.9 MW
ONI 1085.9 MW
ONS 692.1 MW

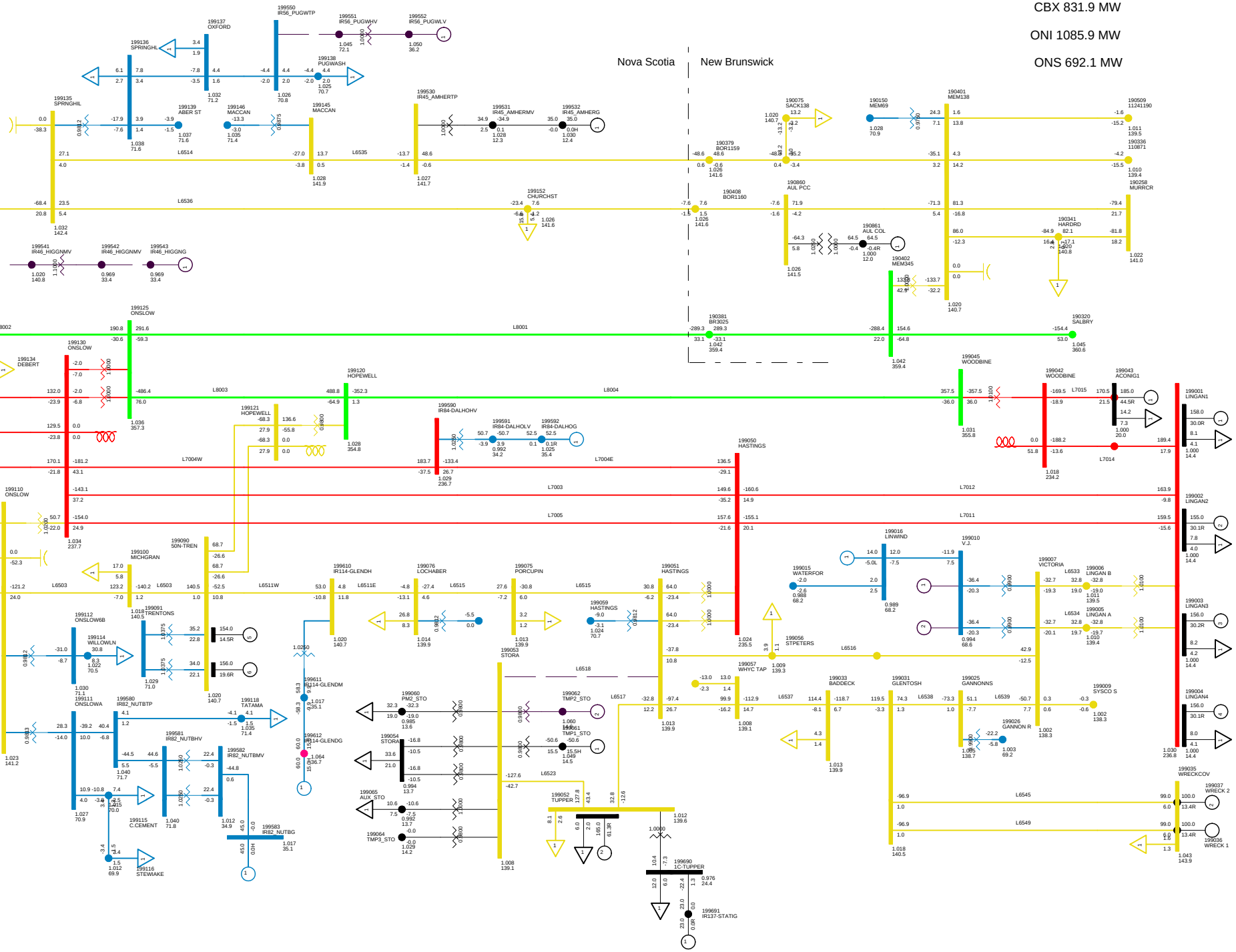

2013 SUMMER PEAK NS EXPORT 300 MW
C52 BBU 47C-601
NORTHEASTERN NS TUE, DEC 09 2008 23:15

Total Wind Gen: 290.1 MW | Gross Tupper 165.0 MW | Gross Wreck Cove 200.0 MW | Net Stora Load 127.6 MW
Gross Lingan 625.0 MW | Gross Trenton 310.0 MW | Gross Gas Turbine 0.0 MW | Total BMPC Load 108.6 MW
Gross Pt Aconi 185.0 MW | Gross Tuft's Cove 229.2 MW | Gross Small Hydro 42.9 MW

Bus - VOLTAGE (KV/PU)
Branch - MW/MVAR
Equipment - MW/MVAR
110.0%RATEA
1.050OV 0.950UV
KV: <=25.000 <=69.000 <=138.000 <=230.000 <=345.000 >345.000

Figure ___

NSX 347.5 MW
CBX 831.5 MW
ONI 1085.5 MW
ONS 692.1 MW

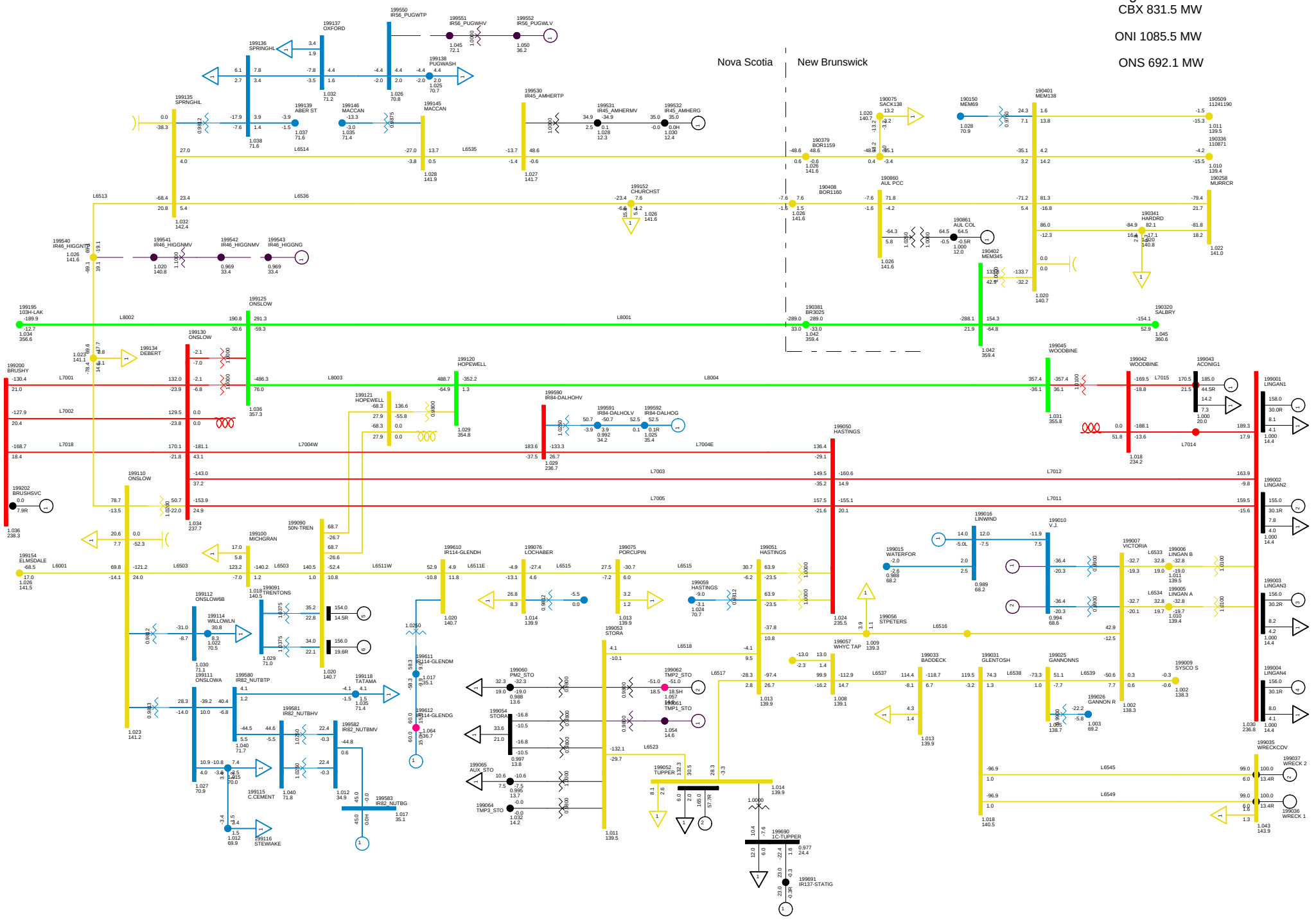

2013 SUMMER PEAK NS EXPORT 300 MW
C53 BREAKR 47C-602 FAULT
NORTHEASTERN NS TUE, DEC 09 2008 23:15

Total Wind Gen: 290.1 MW
Gross Lingan 625.0 MW
Gross Pt Aconi 185.0 MW
Gross Tupper 165.0 MW
Gross Trenton 310.0 MW
Gross Tuft's Cove 229.2 MW
Gross Wreck Cove 200.0 MW
Gross Gas Turbine 0.0 MW
Gross Small Hydro 42.9 MW
Net Stora Load 128.0 MW
Total BMPC Load 108.6 MW

Bus - VOLTAGE (KV/PU)
Branch - MW/MVAR
Equipment - MW/MVAR
110.0%RATEA
1.0500V 0.950UV
KV: <=25.000 <=69.000 <=138.000 <=230.000 <=345.000 >345.000

Figure ___

NSX 299.9 MW

CBX 780.3 MW

ONI 1037.4 MW

ONS 692.0 MW

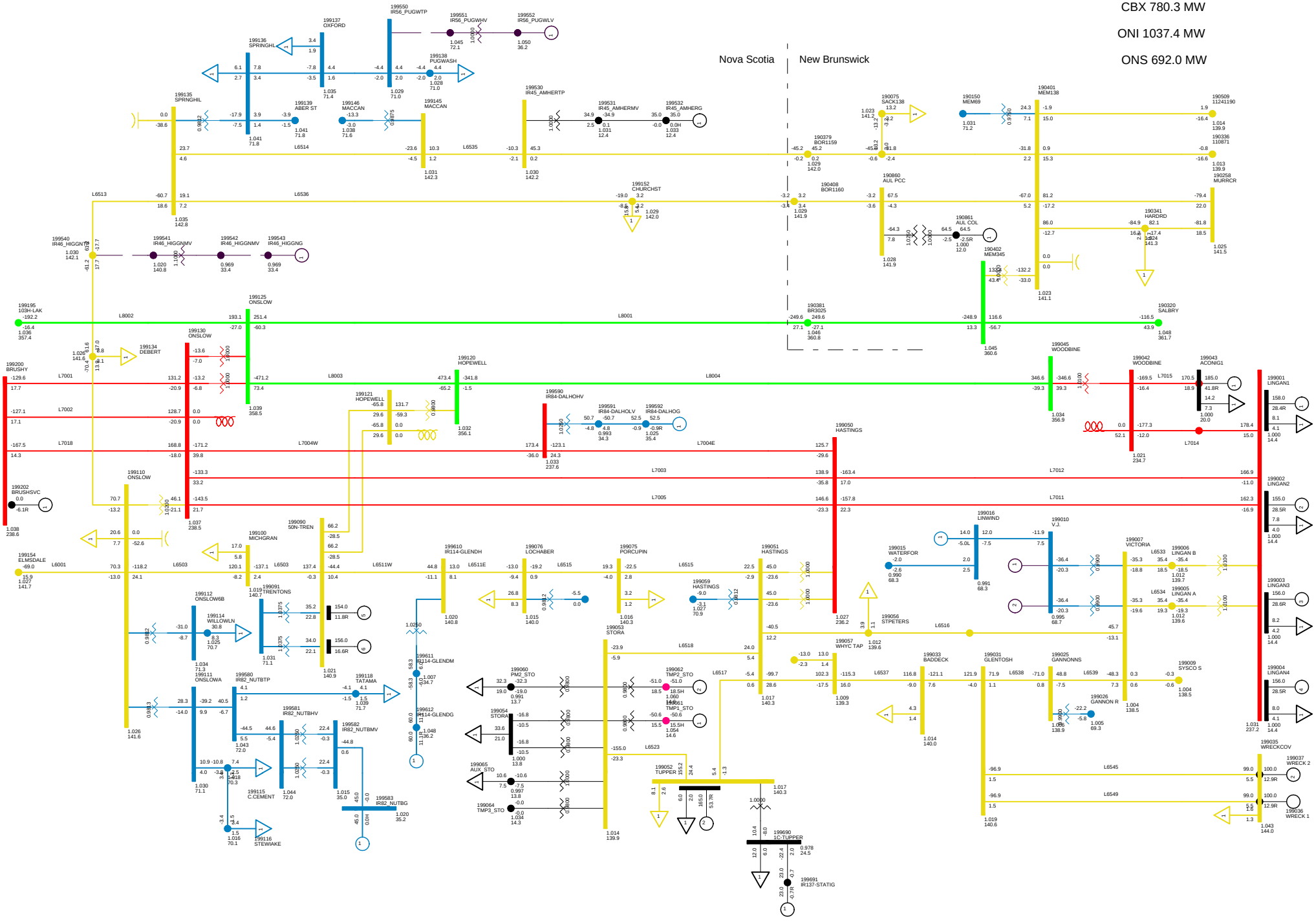

2010 SUMMER PEAK, NSLOAD=1700
NS-NB=+300; NB-NE=1000; CBX=780; ONI=1037 ONS=692
NORTHEASTERN NS TUE, DEC 09 2008 23:15

Total Wind Gen: 290.1 MW
Gross Lingan 625.0 MW
Gross Pt Aconi 185.0 MW
Gross Tupper 165.0 MW
Gross Trenton 310.0 MW
Gross Tuft's Cove 229.2 MW
Gross Wreck Cove 200.0 MW
Gross Gas Turbine 0.0 MW
Gross Small Hydro 42.9 MW
Net Stora Load 178.9 MW
Total BMPC Load 108.6 MW

Bus - VOLTAGE (KV/PU)
Branch - MW/MVAR
Equipment - MW/MVAR
110.0%RATEA
1.050OV 0.950UV
KV: <=25.000 <=69.000 <=138.000 <=230.000 <=345.000 >345.000

Figure ___

NSX 147.0 MW
CBX 623.5 MW
ONI 883.8 MW
ONS 692.0 MW

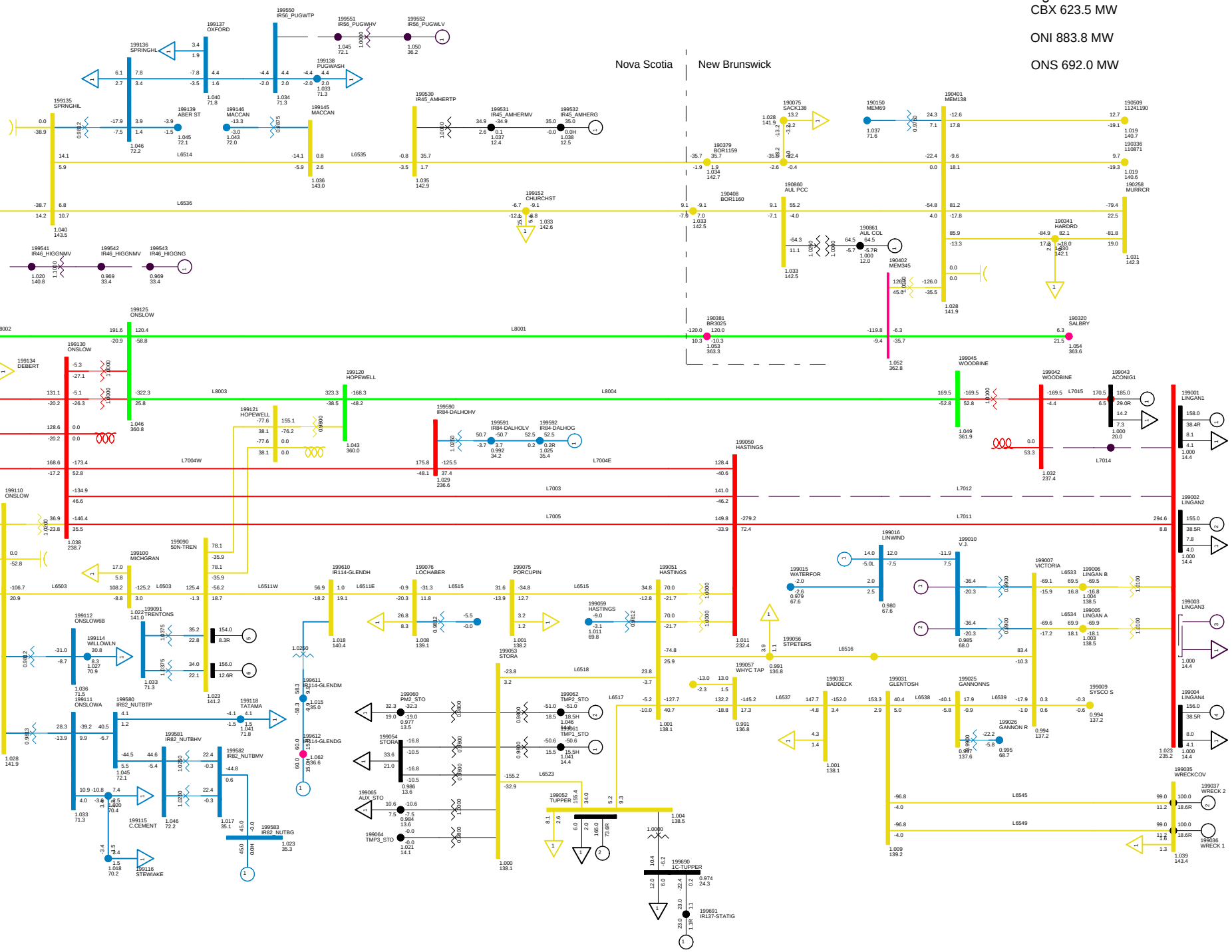

2013 SUMMER PEAK NS EXPORT 300 MW
C54S BBU 88S-723 WITH SPS
NORTHEASTERN NS TUE, DEC 09 2008 23:16

Total Wind Gen: 290.1 MW
Gross Lingan 469.0 MW
Gross Pt Aconi 185.0 MW
Gross Tupper 165.0 MW
Gross Trenton 310.0 MW
Gross Tuft's Cove 229.2 MW
Gross Wreck Cove 200.0 MW
Gross Gas Turbine 0.0 MW
Gross Small Hydro 42.9 MW
Net Stora Load 178.9 MW
Total BMPC Load 108.6 MW

Bus - VOLTAGE (KV/PU)
Branch - MW/MVAR
Equipment - MW/MVAR
110.0%RATEA
1.0500V 0.950UV
KV: <=25.000 <=69.000 <=138.000 <=230.000 <=345.000 >345.000

Figure ___

NSX 289.3 MW
CBX 781.2 MW
ONI 1030.6 MW
ONS 695.7 MW

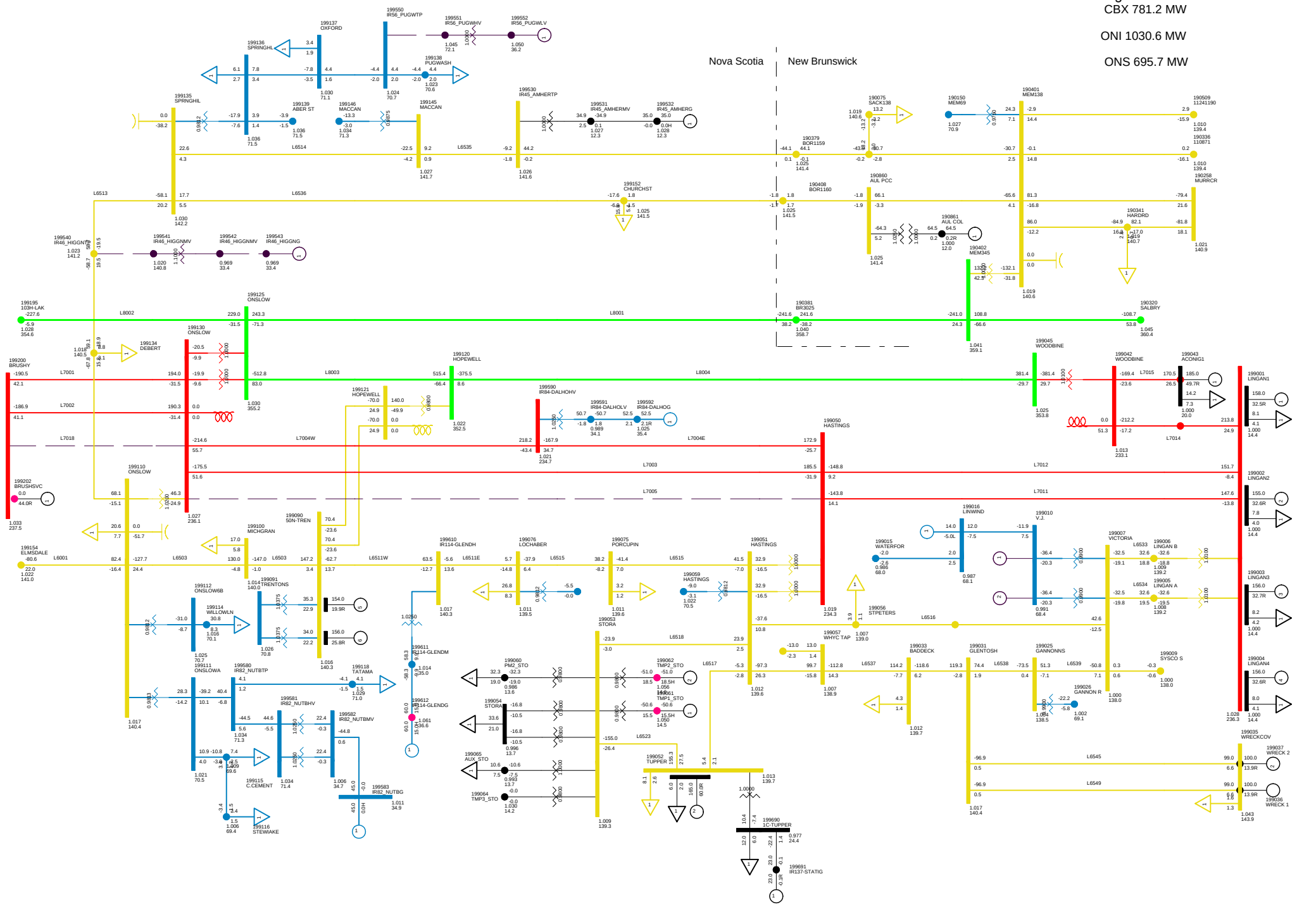

2013 SUMMER PEAK NS EXPORT 300 MW
C55 BBU 67N-712
NORTHEASTERN NS TUE, DEC 09 2008 23:16

Total Wind Gen: 290.1 MW | Gross Tupper 165.0 MW | Gross Wreck Cove 200.0 MW | Net Stora Load 178.9 MW
Gross Lingan 625.0 MW | Gross Trenton 310.0 MW | Gross Gas Turbine 0.0 MW | Total BMPC Load 108.6 MW
Gross Pt Aconi 185.0 MW | Gross Tuft's Cove 229.2 MW | Gross Small Hydro 42.9 MW

Bus - VOLTAGE (KV/PU)
Branch - MW/MVAR
Equipment - MW/MVAR
110.0%RATEA
1.0500V 0.950UV
KV: <=25.000 <=69.000 <=138.000 <=230.000 <=345.000 >345.000

Figure ___

NSX 128.1 MW
CBX 629.7 MW
ONI 869.2 MW
ONS 694.6 MW

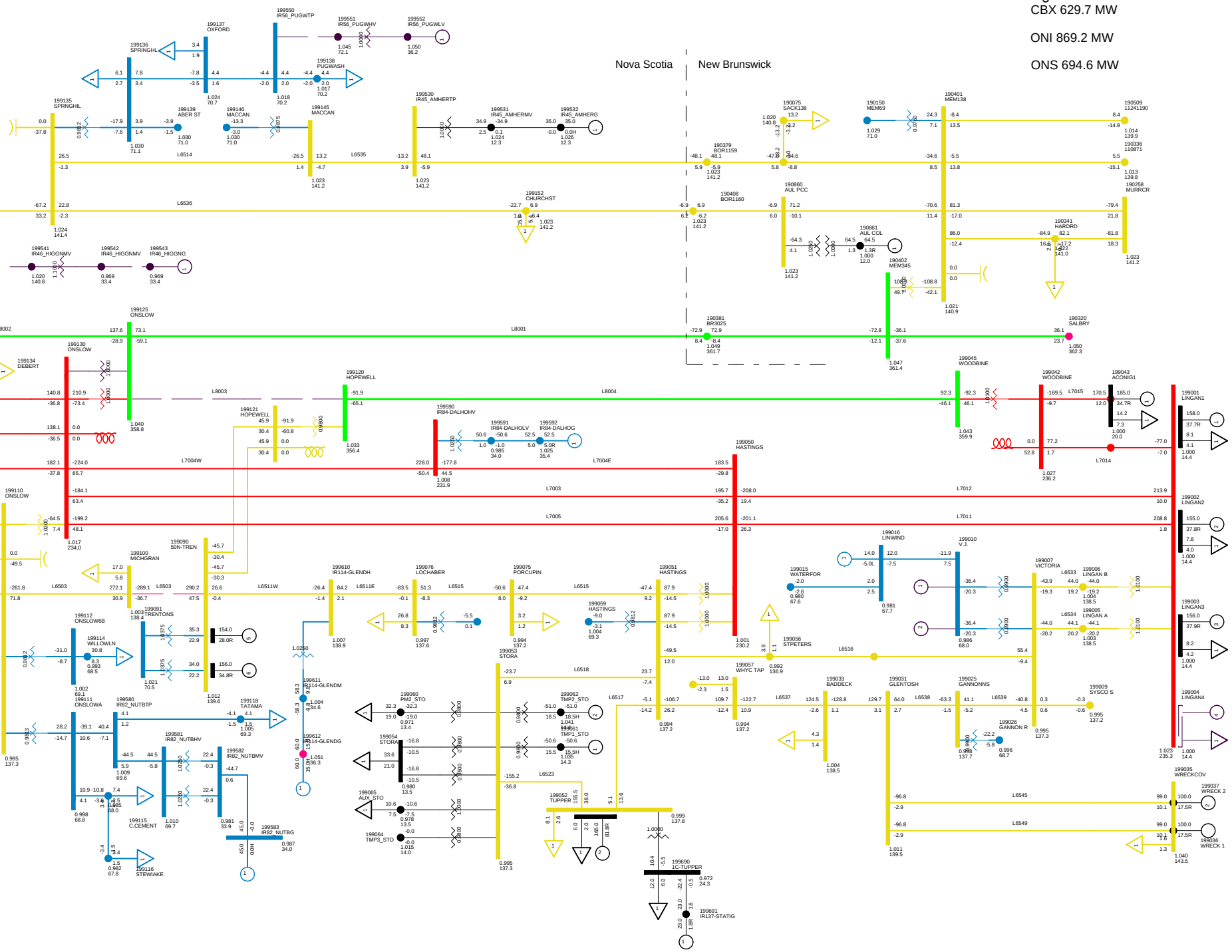

2013 SUMMER PEAK NS EXPORT 300 MW
C56S BBU 67N-811 L8003 + T82 1 UNIT SPS
NORTHEASTERN NS TUE, DEC 09 2008 23:16

Total Wind Gen: 290.1 MW | Gross Tupper 165.0 MW | Gross Wreck Cove 200.0 MW | Net Stora Load 178.9 MW
Gross Lingan 469.0 MW | Gross Trenton 310.0 MW | Gross Gas Turbine 0.0 MW | Total BMPC Load 108.6 MW
Gross Pt Aconi 185.0 MW | Gross Tuft's Cove 229.2 MW | Gross Small Hydro 42.9 MW

Bus - VOLTAGE (KV/PU)
Branch - MW/MVAR
Equipment - MW/MVAR
110.0%RATEA
1.050UV 0.950UV
KV: <=25.000 <=69.000 <=138.000 <=230.000 <=345.000 >345.000

Figure ___

NSX 122.8 MW
CBX 629.6 MW
ONI 869.0 MW
ONS 700.7 MW

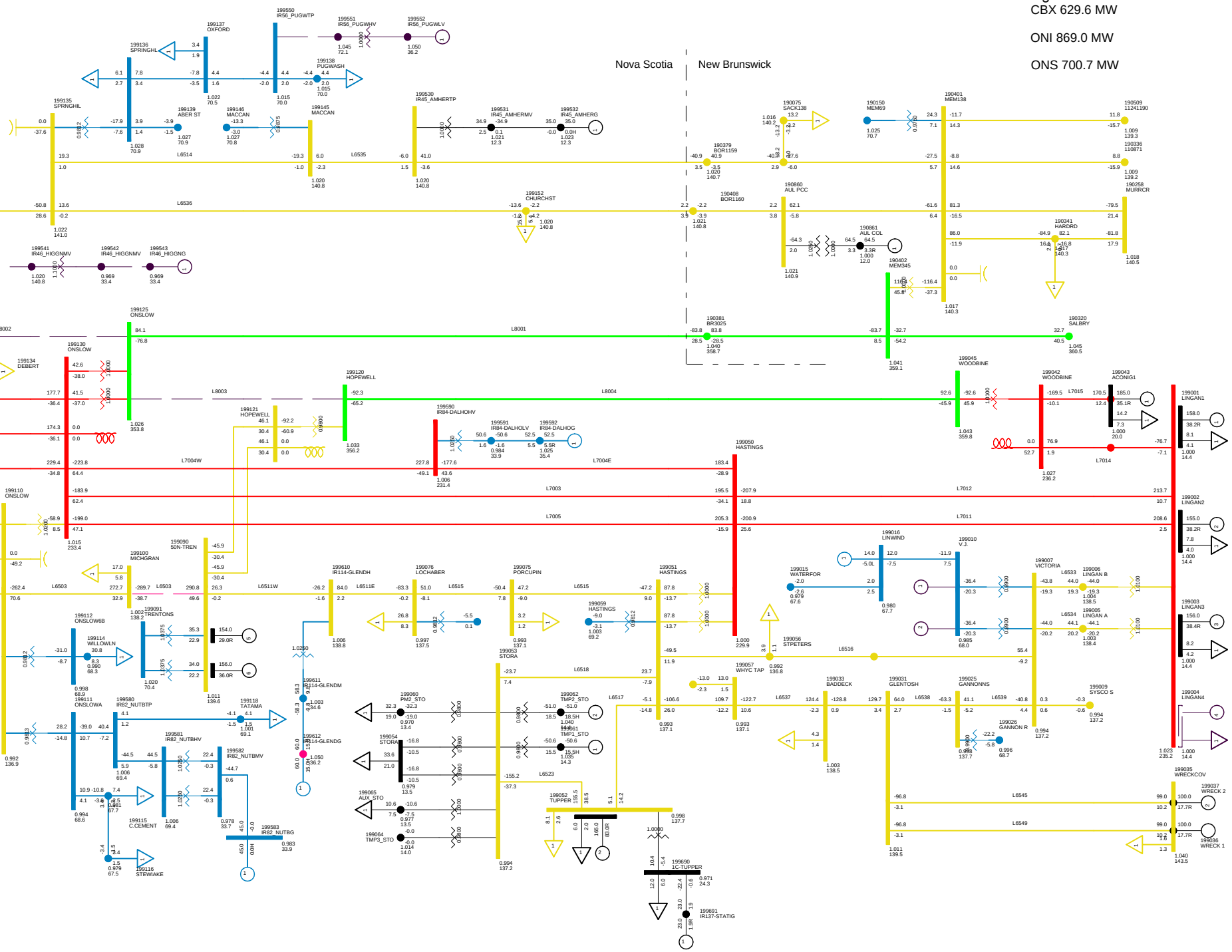

2013 SUMMER PEAK NS EXPORT 300 MW
C57S BBU 67N-812 1-UNIT SPS
NORTHEASTERN NS TUE, DEC 09 2008 23:17

Total Wind Gen: 290.1 MW
Gross Lingan 469.0 MW
Gross Pt Aconi 185.0 MW
Gross Tupper 165.0 MW
Gross Trenton 310.0 MW
Gross Tuft's Cove 229.2 MW
Gross Wreck Cove 200.0 MW
Gross Gas Turbine 0.0 MW
Gross Small Hydro 42.9 MW
Total Stora Load 178.9 MW
Total BMPC Load 108.5 MW

Bus - VOLTAGE (KV/PU)
Branch - MW/MVAR
Equipment - MW/MVAR
110.0%RATEA
1.0500V 0.950UV
KV: <=25.000 <=69.000 <=138.000 <=230.000 <=345.000 >345.000

Figure ___

NSX 3.3 MW

CBX 488.4 MW

ONI 741.2 MW

ONS 693.0 MW

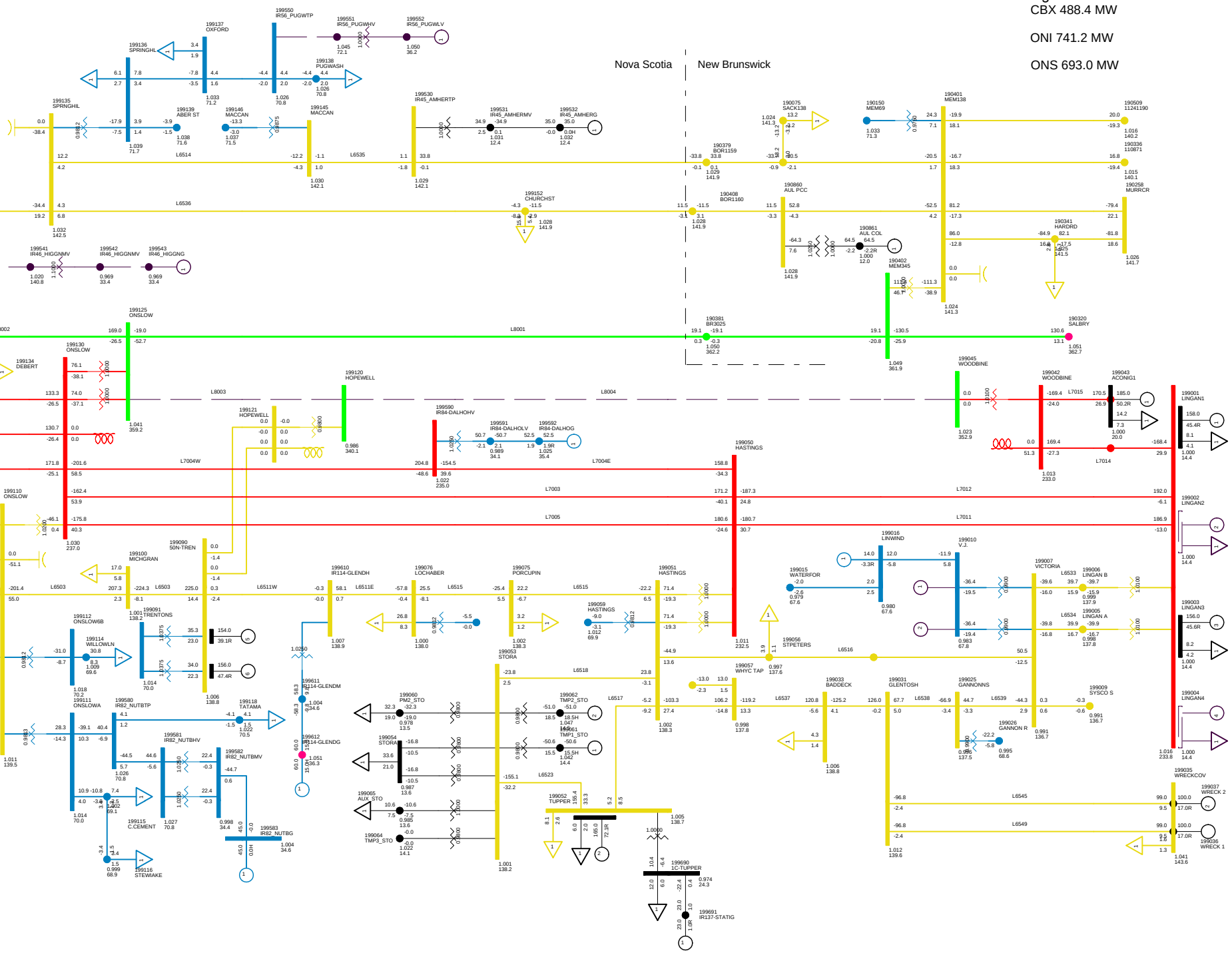

2013 SUMMER PEAK NS EXPORT 300 MW
C58SS BBU 79N-810 2-UNIT SPS
NORTHEASTERN NS TUE, DEC 09 2008 23:17

Total Wind Gen: 290.1 MW | Gross Tupper 165.0 MW | Gross Wreck Cove 200.0 MW | Net Stora Load 178.9 MW
Gross Lingan 314.0 MW | Gross Trenton 310.0 MW | Gross Gas Turbine 0.0 MW | Total BMPC Load 108.6 MW
Gross Pt Aconi 185.0 MW | Gross Tuft's Cove 229.2 MW | Gross Small Hydro 42.9 MW

Bus - VOLTAGE (KV/PU)
Branch - MW/MVAR
Equipment - MW/MVAR
110.0%RATEA
1.0500V 0.950UV
KV: <=25.000 <=69.000 <=138.000 <=230.000 <=345.000 >345.000

Figure ___

NSX 32.7 MW

CBX 499.8 MW

ONI 768.5 MW

ONS 691.5 MW

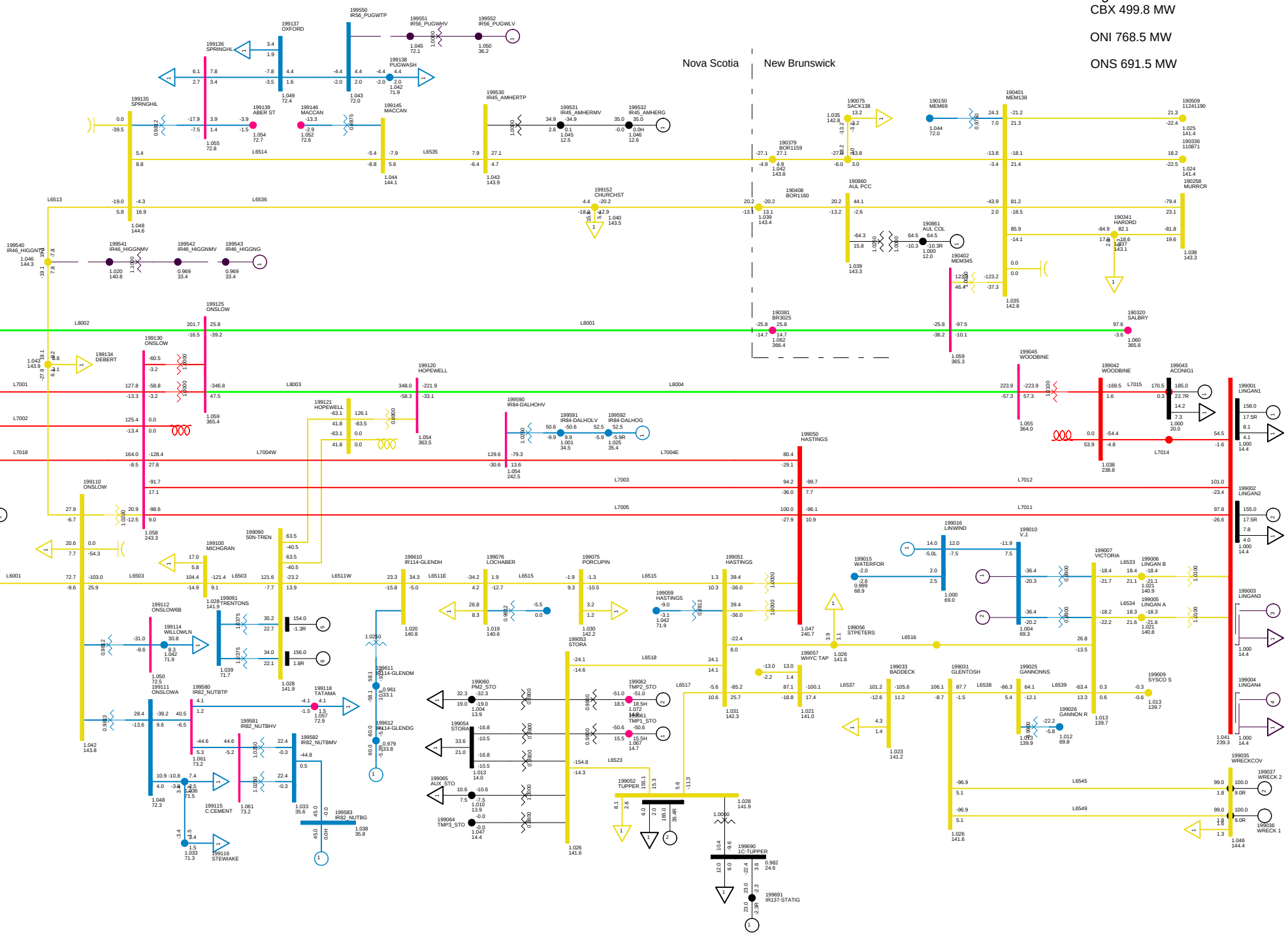

2013 SUMMER PEAK NS EXPORT 300 MW
C59 BBU 88S-721 TRIP LINGAN 3 AND 4
NORTHEASTERN NS TUE, DEC 09 2008 23:17

Total Wind Gen: 290.1 MW | Gross Tupper 165.0 MW | Gross Wreck Cove 200.0 MW | Net Stora Load 178.9 MW
Gross Lingan 313.0 MW | Gross Trenton 310.0 MW | Gross Gas Turbine 0.0 MW | Total BMPC Load 108.6 MW
Gross Pt Aconi 185.0 MW | Gross Tuft's Cove 229.2 MW | Gross Small Hydro 42.9 MW

Bus - VOLTAGE (KV/PU)
Branch - MW/MVAR
Equipment - MW/MVAR
110.0%RATEA
1.0500V 0.9500V
KV: <=25.000 <=69.000 <=138.000 <=230.000 <=345.000 >345.000

Figure ___

NSX 295.2 MW
CBX 782.1 MW
ONI 1033.0 MW
ONS 692.2 MW

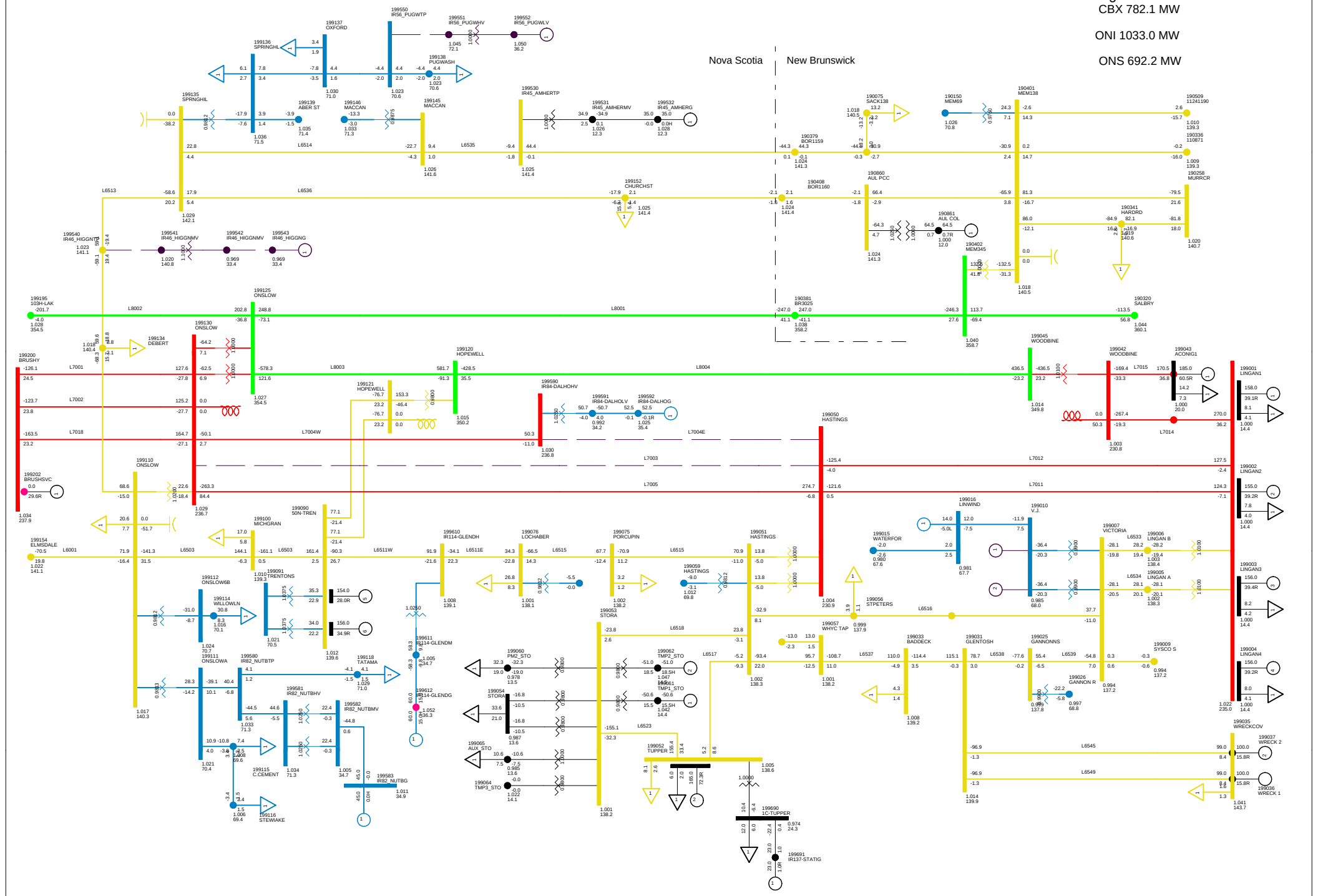

2013 SUMMER PEAK NS EXPORT 300 MW
C60 DCT ON L7003+L7004
NORTHEASTERN NS TUE, DEC 09 2008 23:17

Total Wind Gen: 290.1 MW | Gross Tupper 165.0 MW | Gross Wreck Cove 200.0 MW | Net Stora Load 178.9 MW
Gross Lingan 625.0 MW | Gross Trenton 310.0 MW | Gross Gas Turbine 0.0 MW | Total BMPC Load 108.6 MW
Gross Pt Aconi 185.0 MW | Gross Tuft's Cove 229.2 MW | Gross Small Hydro 42.9 MW

Bus - VOLTAGE (KV/PU)
Branch - MW/MVAR
Equipment - MW/MVAR
110.0%RATEA
1.050UV 0.950UV
KV: <=25.000 <=69.000 <=138.000 <=230.000 <=345.000 >345.000

Figure ___

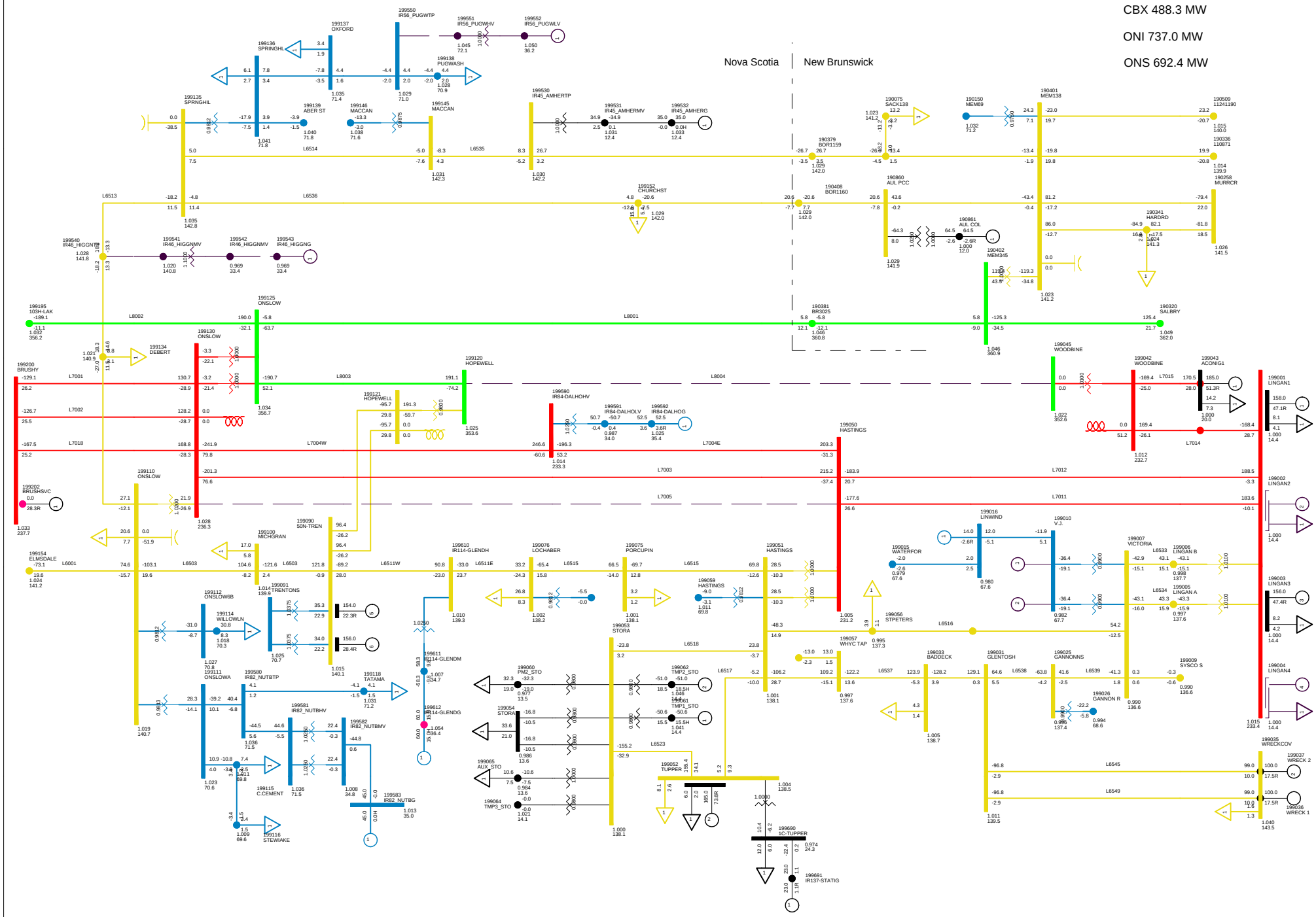

2013 SUMMER PEAK NS EXPORT 300 MW
C61SS DCT ON STRAIT CROSSING L8004-L7005 WITH 2-UNIT SPS
NORTHEASTERN NS TUE, DEC 09 2008 23:18

Total Wind Gen: 290.1 MW
Gross Lingan 314.0 MW
Gross Pt Aconi 185.0 MW
Gross Tupper 165.0 MW
Gross Trenton 310.0 MW
Gross Tuft's Cove 229.2 MW
Gross Wreck Cove 200.0 MW
Gross Gas Turbine 0.0 MW
Gross Small Hydro 42.9 MW
Net Stora Load 178.9 MW
Total BMPC Load 108.6 MW

Bus - VOLTAGE (KV/PU)
Branch - MW/MVAR
Equipment - MW/MVAR
110.0%RATEA
1.050OV 0.950UV
KV: <=25.000 <=69.000 <=138.000 <=230.000 <=345.000 >345.000

Figure ___

NSX 32.7 MW

CBX 499.8 MW

ONI 768.5 MW

ONS 691.5 MW

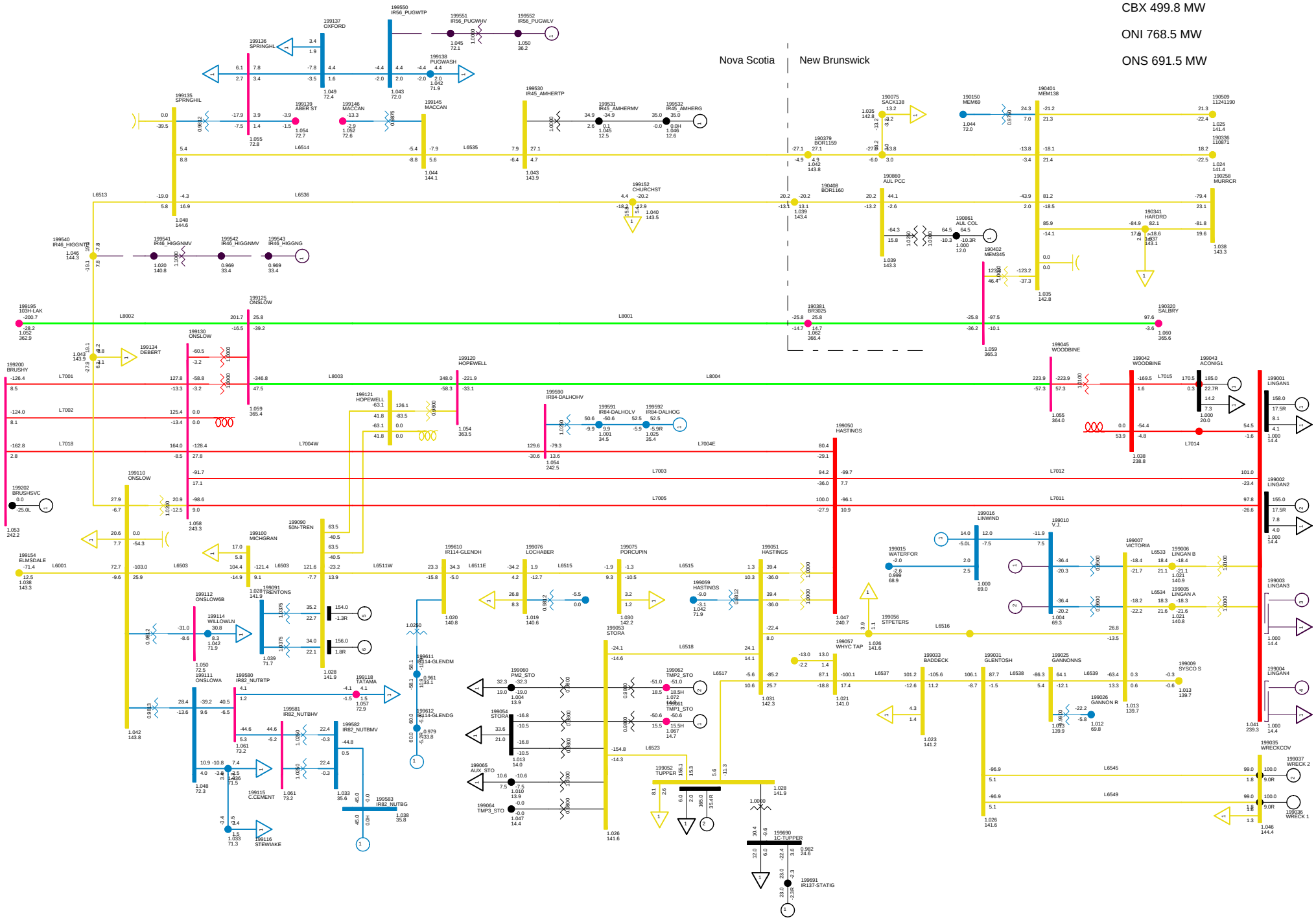

2013 SUMMER PEAK NS EXPORT 300 MW
C62 FAULT ON BREAKER 88S-721 TRIPS LINGAN 3 AND 4
NORTHEASTERN NS TUE, DEC 09 2008 23:18

Total Wind Gen: 290.1 MW | Gross Tupper 165.0 MW | Gross Wreck Cove 200.0 MW | Net Stora Load 178.9 MW
Gross Lingan 313.0 MW | Gross Trenton 310.0 MW | Gross Gas Turbine 0.0 MW | Total BMPC Load 108.6 MW
Gross Pt Aconi 185.0 MW | Gross Tuft's Cove 229.2 MW | Gross Small Hydro 42.9 MW

Bus - VOLTAGE (KV/PU)
Branch - MW/MVAR
Equipment - MW/MVAR
110.0%RATEA
1.050OV 0.950UV
KV: <=25.000 <=69.000 <=138.000 <=230.000 <=345.000 >345.000

Figure ___

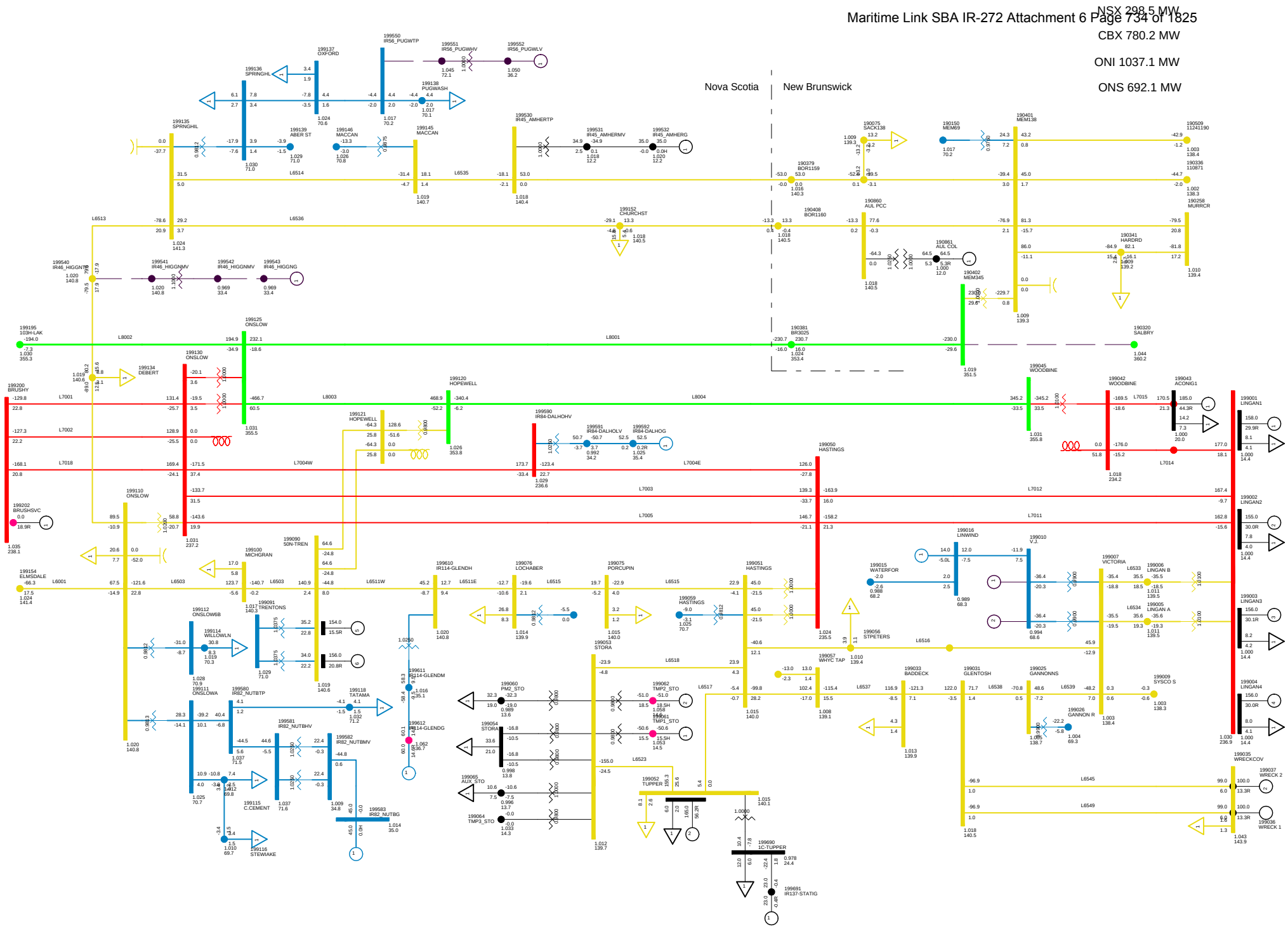

2013 SUMMER PEAK NS EXPORT 300 MW
C63 FAULT ON SALISBURY SA3-2 TRIPS L3006 AND L3017
NORTHEASTERN NS TUE, DEC 09 2008 23:18

Total Wind Gen: 290.1 MW | Gross Tupper 165.0 MW | Gross Wreck Cove 200.0 MW | Net Stora Load 178.9 MW
Gross Lingan 625.0 MW | Gross Trenton 310.0 MW | Gross Gas Turbine 0.0 MW | Total BMPC Load 108.6 MW
Gross Pt Aconi 185.0 MW | Gross Tuft's Cove 229.2 MW | Gross Small Hydro 42.9 MW

Bus - VOLTAGE (KV/PU)
Branch - MW/MVAR
Equipment - MW/MVAR
110.0%RATEA
1.050OV 0.950UV
KV: <=25.000 <=69.000 <=138.000 <=230.000 <=345.000 >345.000

Figure ___

NSX 299.5 MW

CBX 780.3 MW

ONI 1037.4 MW

ONS 691.9 MW

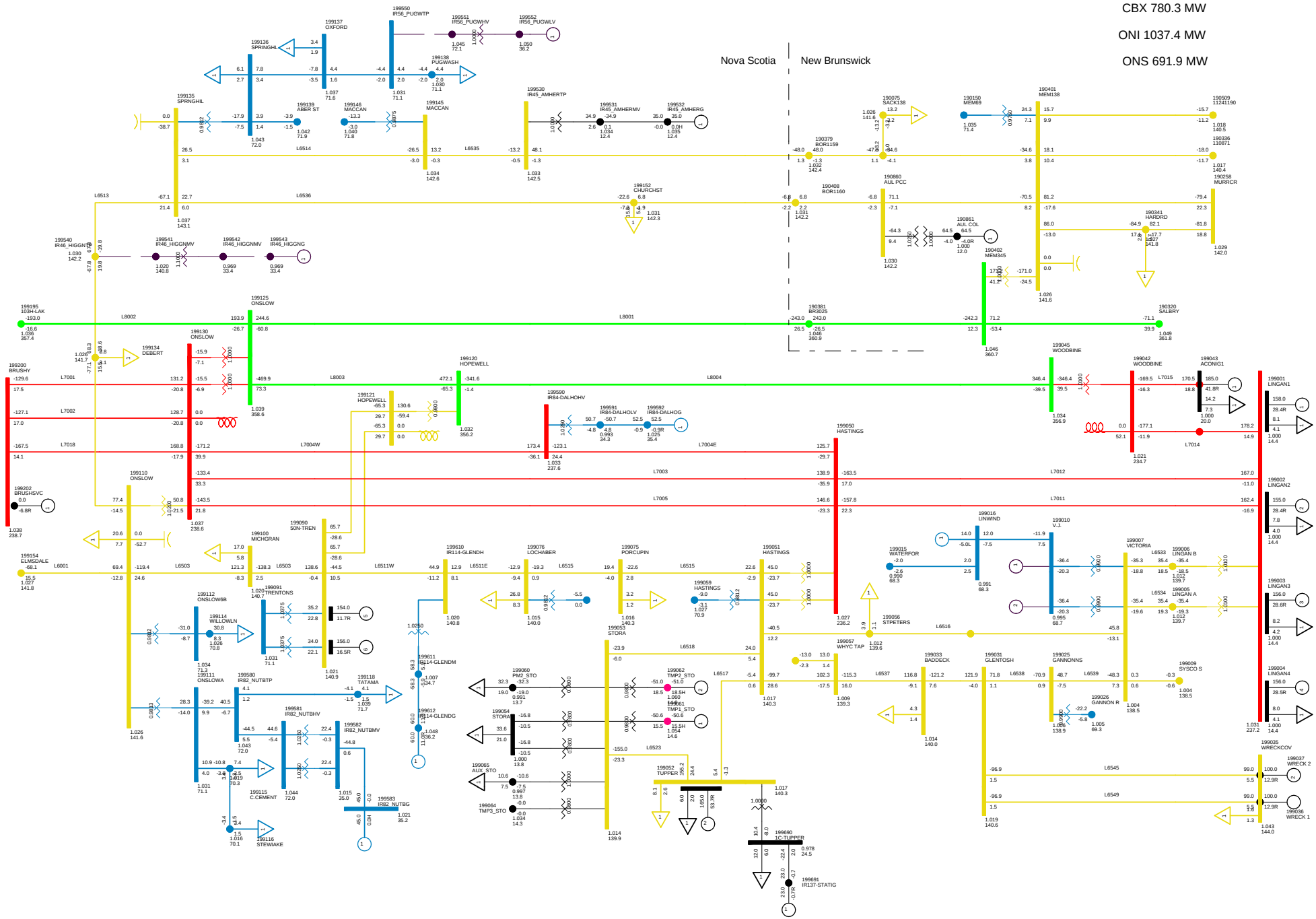

2013 SUMMER PEAK NS EXPORT 300 MW
C64 FAULT ON BREAKER SALISBURY BREAKER SA3-4 TRIPS L3013 AND
NORTHEASTERN NS TUE, DEC 09 2008 23:18

Total Wind Gen: 290.1 MW
Gross Lingan 625.0 MW
Gross Pt Aconi 185.0 MW
Gross Tupper 165.0 MW
Gross Trenton 310.0 MW
Gross Tuft's Cove 229.2 MW
Gross Wreck Cove 200.0 MW
Gross Gas Turbine 0.0 MW
Gross Small Hydro 42.9 MW
Net Stora Load 178.9 MW
Total BMPC Load 108.6 MW

Bus - VOLTAGE (KV/PU)
Branch - MW/MVAR
Equipment - MW/MVAR
110.0%RATEA
1.050OV 0.950UV
KV: <=25.000 <=69.000 <=138.000 <=230.000 <=345.000 >345.000

Figure ____

NSX -0.9 MW
CBX 479.7 MW
ONI 582.1 MW
ONS 576.2 MW

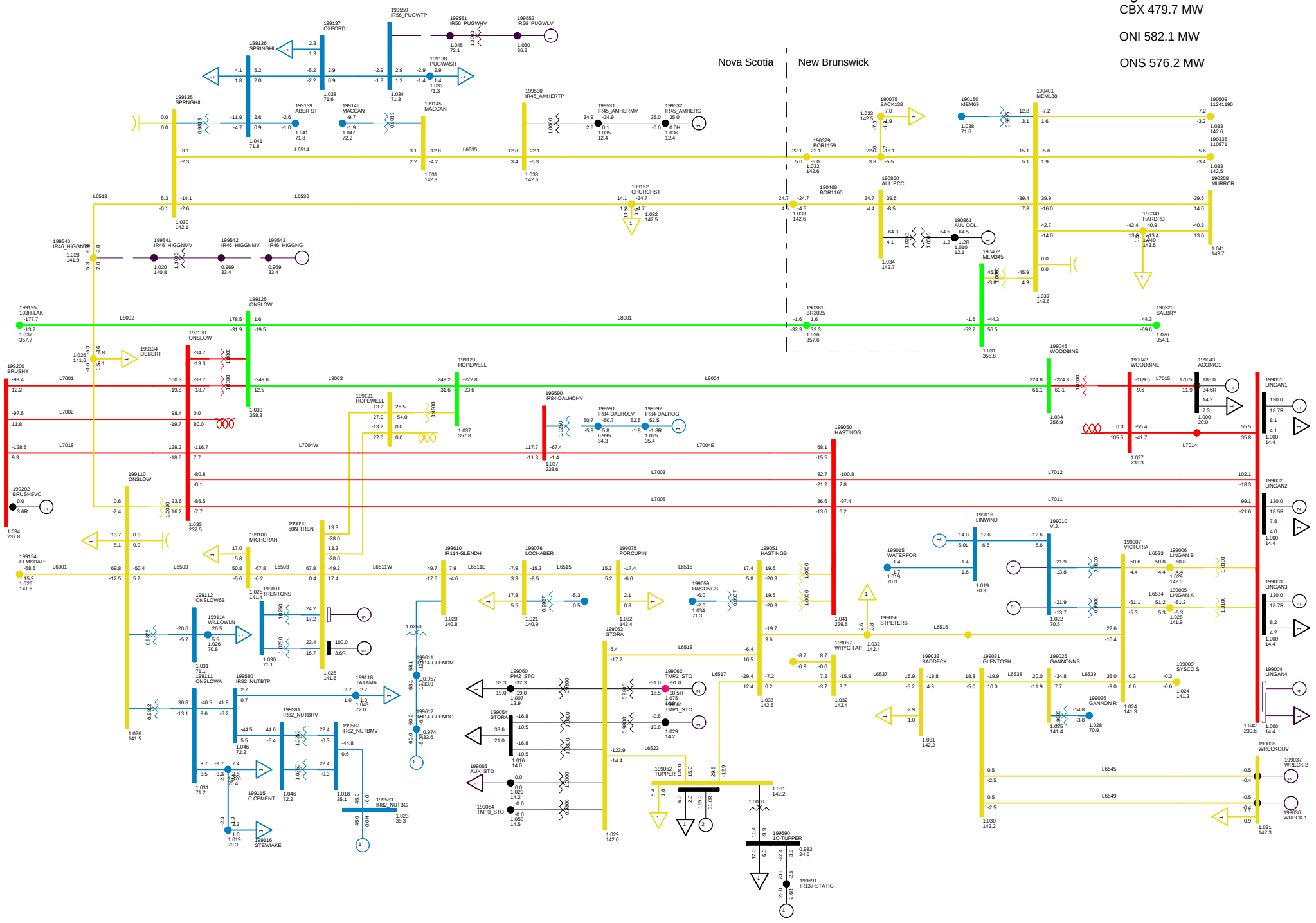

2010 LIGHT, NSLOAD=1150
NS-NB=0; NB-NE=0; CBX=469; ONI=482 ONS=475
NORTHEASTERN NS TUE, DEC 09 2008 21:41

Total Wind Gen: 290.1 MW
Gross Lingan 390.0 MW
Gross Pt Aconi 185.0 MW
Gross Tupper 155.0 MW
Gross Trenton 100.0 MW
Gross Tuft's Cove 0.0 MW
Gross Wreck Cove 0.0 MW
Gross Gas Turbine 0.0 MW
Gross Small Hydro 26.0 MW
Net Stora Load 117.4 MW
Total BMPC Load 42.5 MW

Bus - VOLTAGE (KV/PU)
Branch - MW/MVAR
Equipment - MW/MVAR
110.0%RATEA
1.050OV 0.950UV
KV: <=25.000 <=69.000 <=138.000 <=230.000 <=345.000 >345.000

Figure ___

NSX -21.5 MW

CBX 467.7 MW

ONI 562.2 MW

ONS 576.9 MW

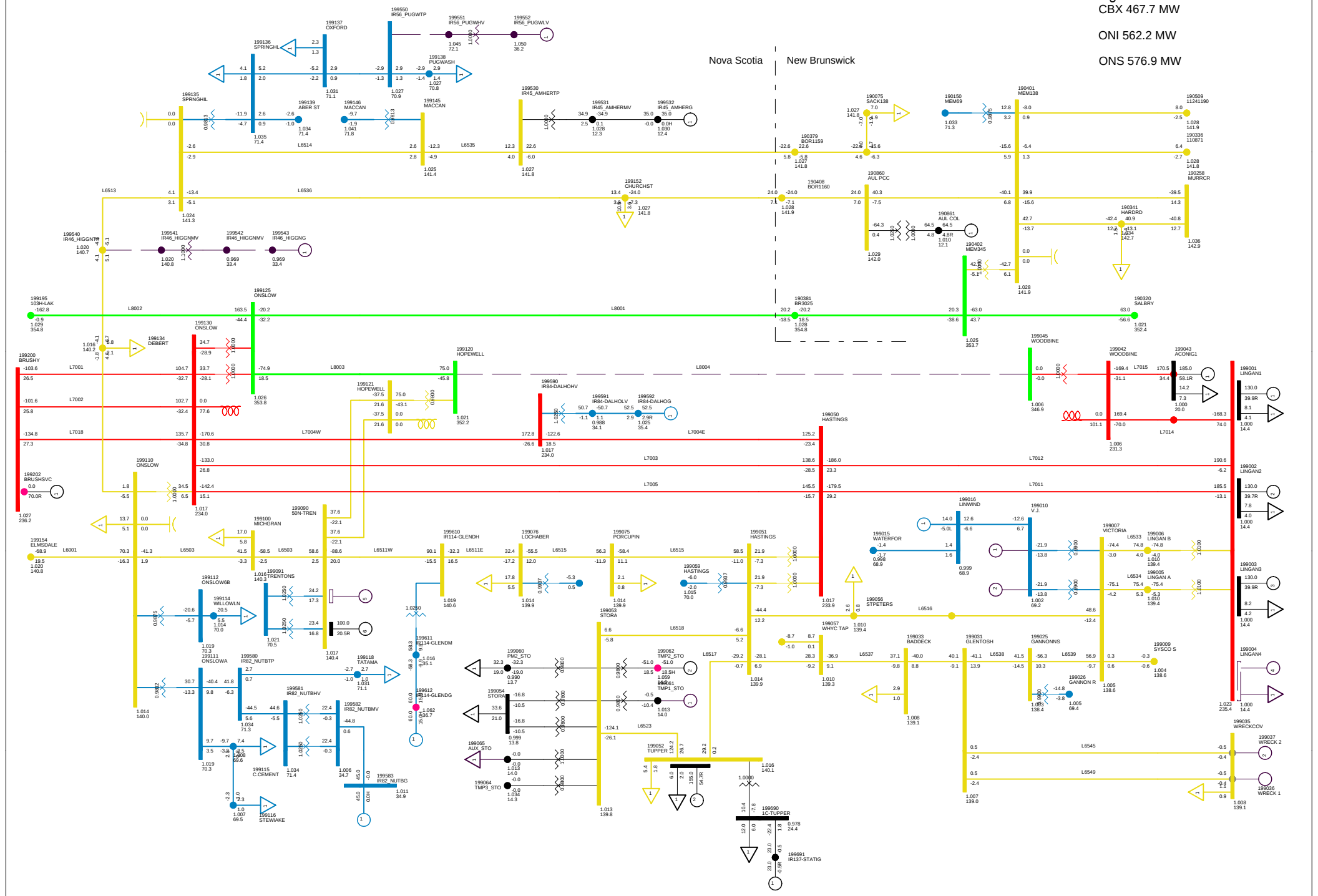

2013 LIGHT LOAD NS-NB=0
C01 LOSE L8004 NO SPS
NORTHEASTERN NS TUE, DEC 09 2008 21:41

Total Wind Gen: 290.1 MW | Gross Tupper 155.0 MW | Gross Wreck Cove 0.0 MW | Net Stora Load 117.4 MW
Gross Lingan 390.0 MW | Gross Trenton 100.0 MW | Gross Gas Turbine 0.0 MW | Total BMPC Load 42.5 MW
Gross Pt Aconi 185.0 MW | Gross Tuft's Cove 0.0 MW | Gross Small Hydro 26.0 MW

Bus - VOLTAGE (KV/PU)
Branch - MW/MVAR
Equipment - MW/MVAR
110.0%RATEA
1.0500V 0.950UV
KV: <=25.000 <=69.000 <=138.000 <=230.000 <=345.000 >345.000

Figure ___

NSX -14.4 MW

CBX 475.1 MW

ONI 569.7 MW

ONS 577.3 MW

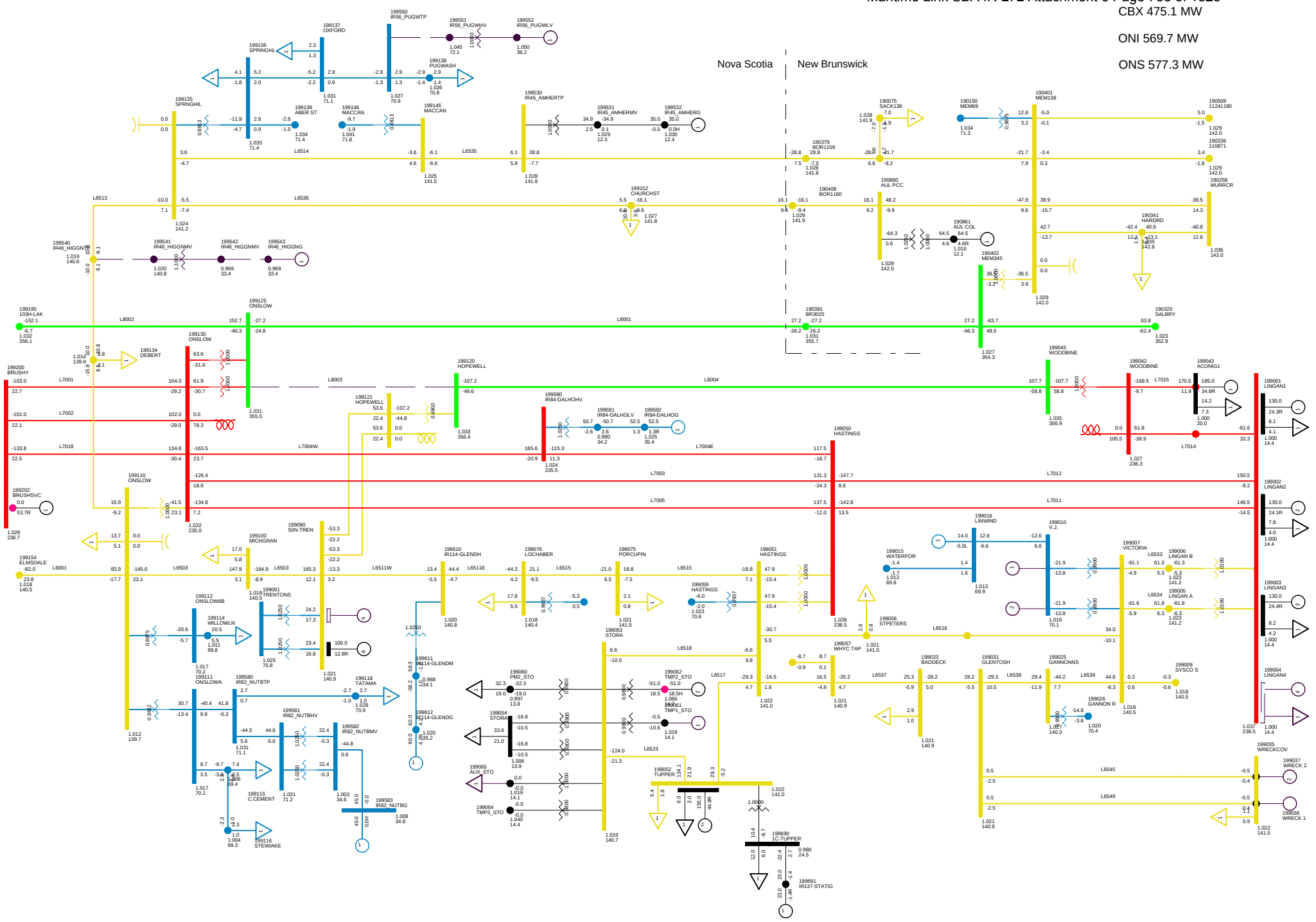

2013 LIGHT LOAD NS-NB=0
C02 LOSE L8003 NO SPS
NORTHEASTERN NS TUE, DEC 09 2008 21:41

Total Wind Gen: 290.1 MW
Gross Lingan 390.0 MW
Gross Pt Aconi 185.0 MW
Gross Tupper 155.0 MW
Gross Trenton 100.0 MW
Gross Tuft's Cove 0.0 MW
Gross Wreck Cove 0.0 MW
Gross Gas Turbine 0.0 MW
Gross Small Hydro 26.0 MW
Net Stora Load 117.4 MW
Total BMPC Load 42.5 MW

Bus - VOLTAGE (KV/PU)
Branch - MW/MVAR
Equipment - MW/MVAR
110.0%RATEA
1.0500V 0.950UV
KV: <=25.000 <=69.000 <=138.000 <=230.000 <=345.000 >345.000

Figure ___

NSX -7.1 MW

CBX 479.4 MW

ONI 581.7 MW

ONS 581.8 MW

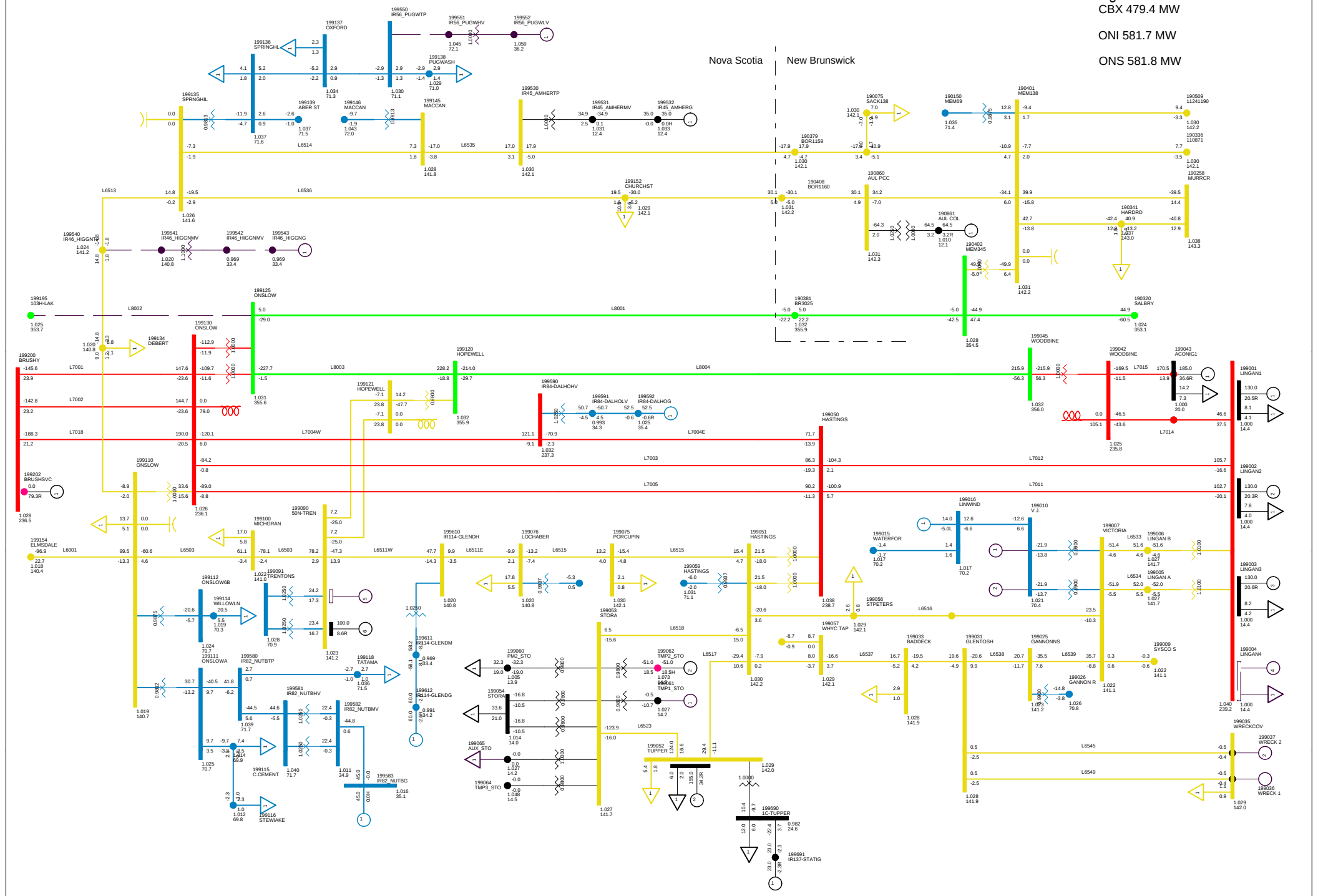

2013 LIGHT LOAD NS-NB=0
C03 LOSE L8002
NORTHEASTERN NS TUE, DEC 09 2008 21:42

Total Wind Gen: 290.1 MW
Gross Lingan 390.0 MW
Gross Pt Aconi 185.0 MW
Gross Tupper 155.0 MW
Gross Trenton 100.0 MW
Gross Tuft's Cove 0.0 MW
Gross Wreck Cove 0.0 MW
Gross Gas Turbine 0.0 MW
Gross Small Hydro 26.0 MW
Net Stora Load 117.4 MW
Total BMPC Load 42.5 MW

Bus - VOLTAGE (KV/PU)
Branch - MW/MVAR
Equipment - MW/MVAR
110.0%RATEA
1.0500V 0.950UV
KV: <=25.000 <=69.000 <=138.000 <=230.000 <=345.000 >345.000

Figure ___

NSX -1.0 MW

CBX 479.6 MW

ONI 582.1 MW

ONS 576.3 MW

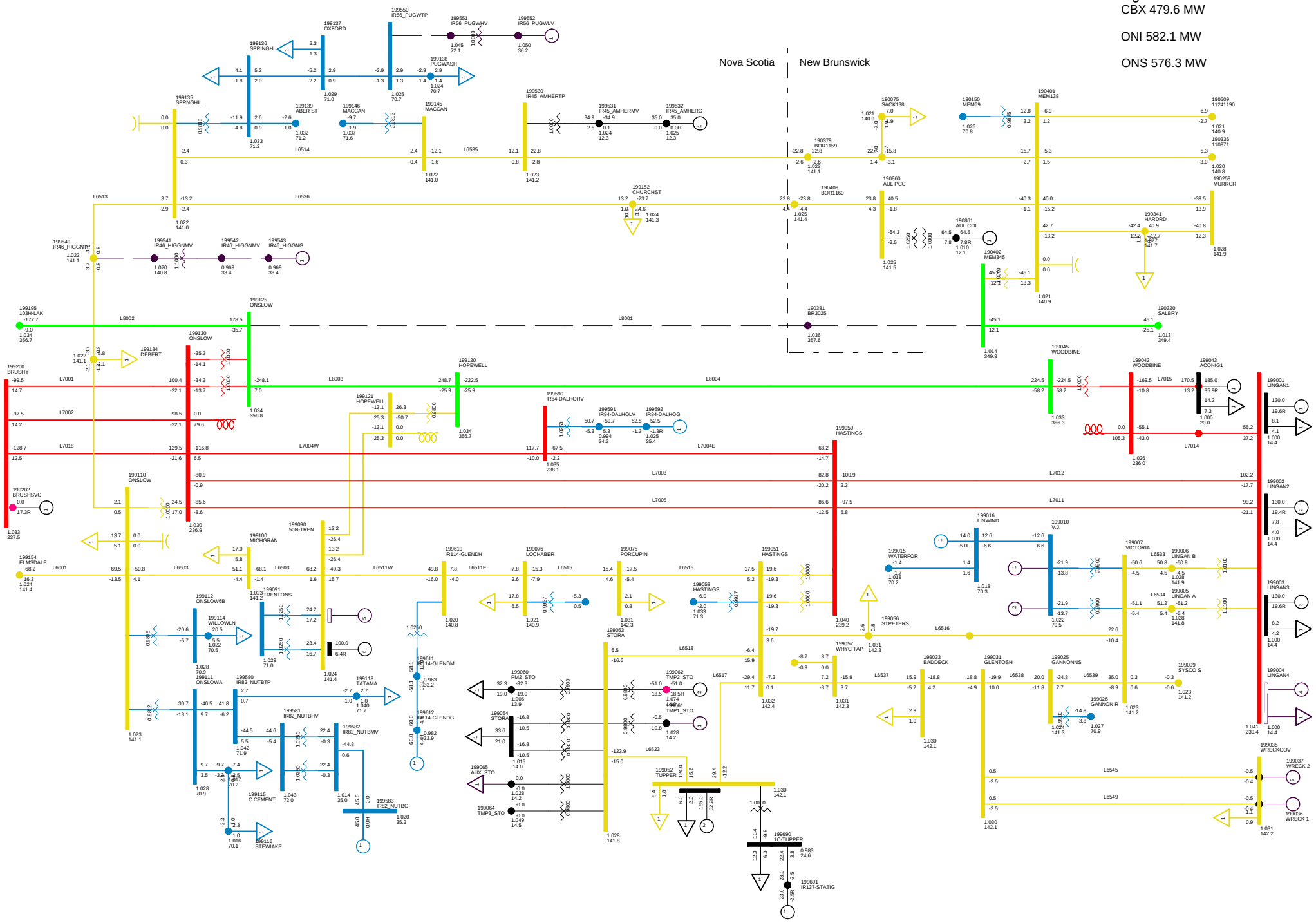

2013 LIGHT LOAD NS-NB=0
C04 LOSE L8001 NO SPS
NORTHEASTERN NS TUE, DEC 09 2008 21:42

Total Wind Gen: 290.1 MW | Gross Tupper 155.0 MW | Gross Wreck Cove 0.0 MW | Net Stora Load 117.4 MW
Gross Lingan 390.0 MW | Gross Trenton 100.0 MW | Gross Gas Turbine 0.0 MW | Total BMPC Load 42.5 MW
Gross Pt Aconi 185.0 MW | Gross Tuft's Cove 0.0 MW | Gross Small Hydro 26.0 MW

Bus - VOLTAGE (KV/PU)
Branch - MW/MVAR
Equipment - MW/MVAR
110.0%RATEA
1.0500V 0.950UV
KV: <=25.000 <=69.000 <=138.000 <=230.000 <=345.000 >345.000

Figure ___

NSX -0.9 MW
CBX 479.7 MW
ONI 582.1 MW
ONS 576.2 MW

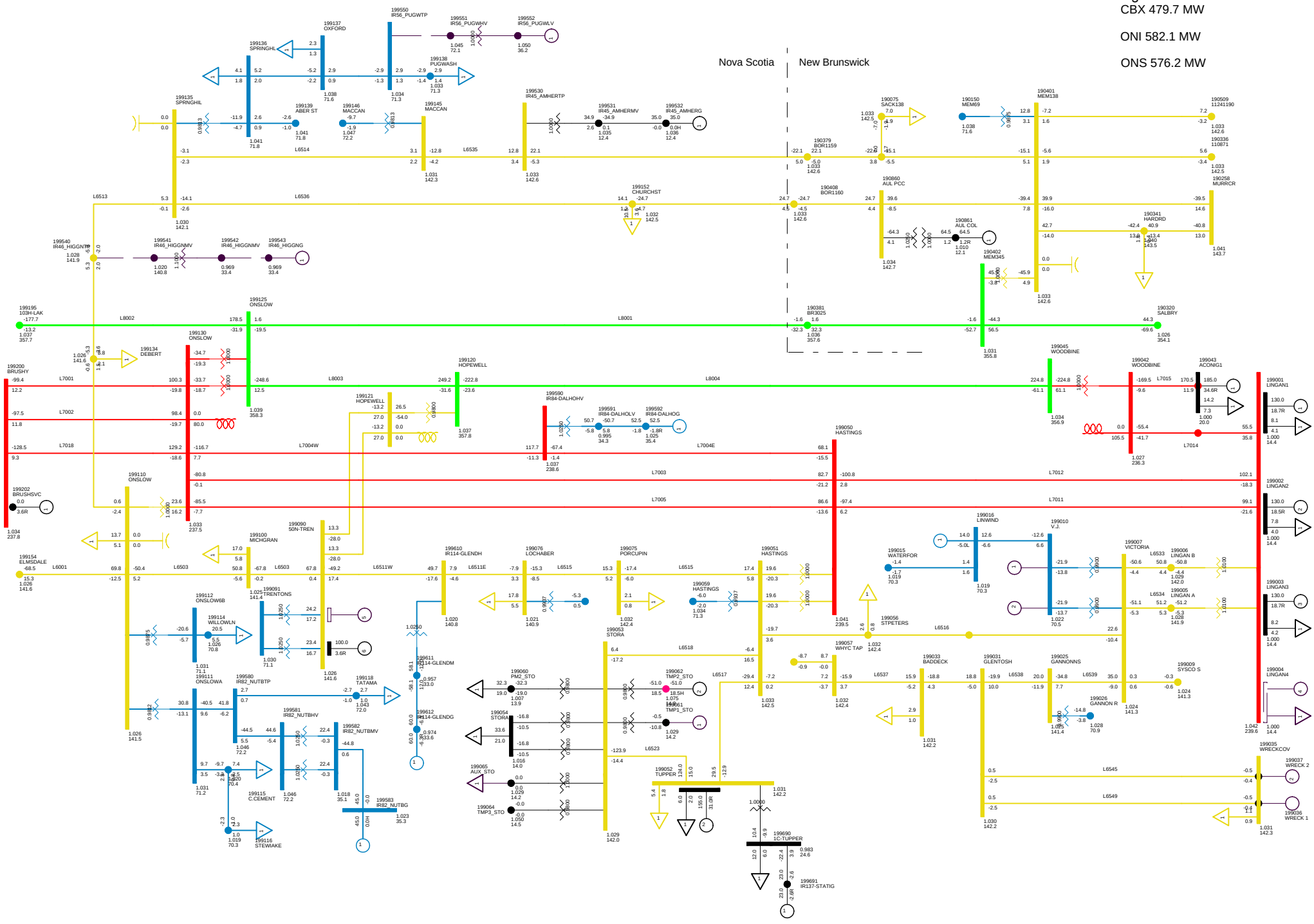

2010 LIGHT, NSLOAD=1150
NS-NB=0; NB-NE=0; CBX=469; ONI=482 ONS=475
NORTHEASTERN NS TUE, DEC 09 2008 21:42

Total Wind Gen: 290.1 MW
Gross Lingan 390.0 MW
Gross Pt Aconi 185.0 MW
Gross Tupper 155.0 MW
Gross Trenton 100.0 MW
Gross Tuft's Cove 0.0 MW
Gross Wreck Cove 0.0 MW
Gross Gas Turbine 0.0 MW
Gross Small Hydro 26.0 MW
Net Stora Load 117.4 MW
Total BMPC Load 42.5 MW

Bus - VOLTAGE (KV/PU)
Branch - MW/MVAR
Equipment - MW/MVAR
110.0%RATEA
1.050OV 0.950UV
KV: <=25.000 <=69.000 <=138.000 <=230.000 <=345.000 >345.000

Figure ___

NSX -2.6 MW

CBX 477.7 MW

ONI 580.5 MW

ONS 576.2 MW

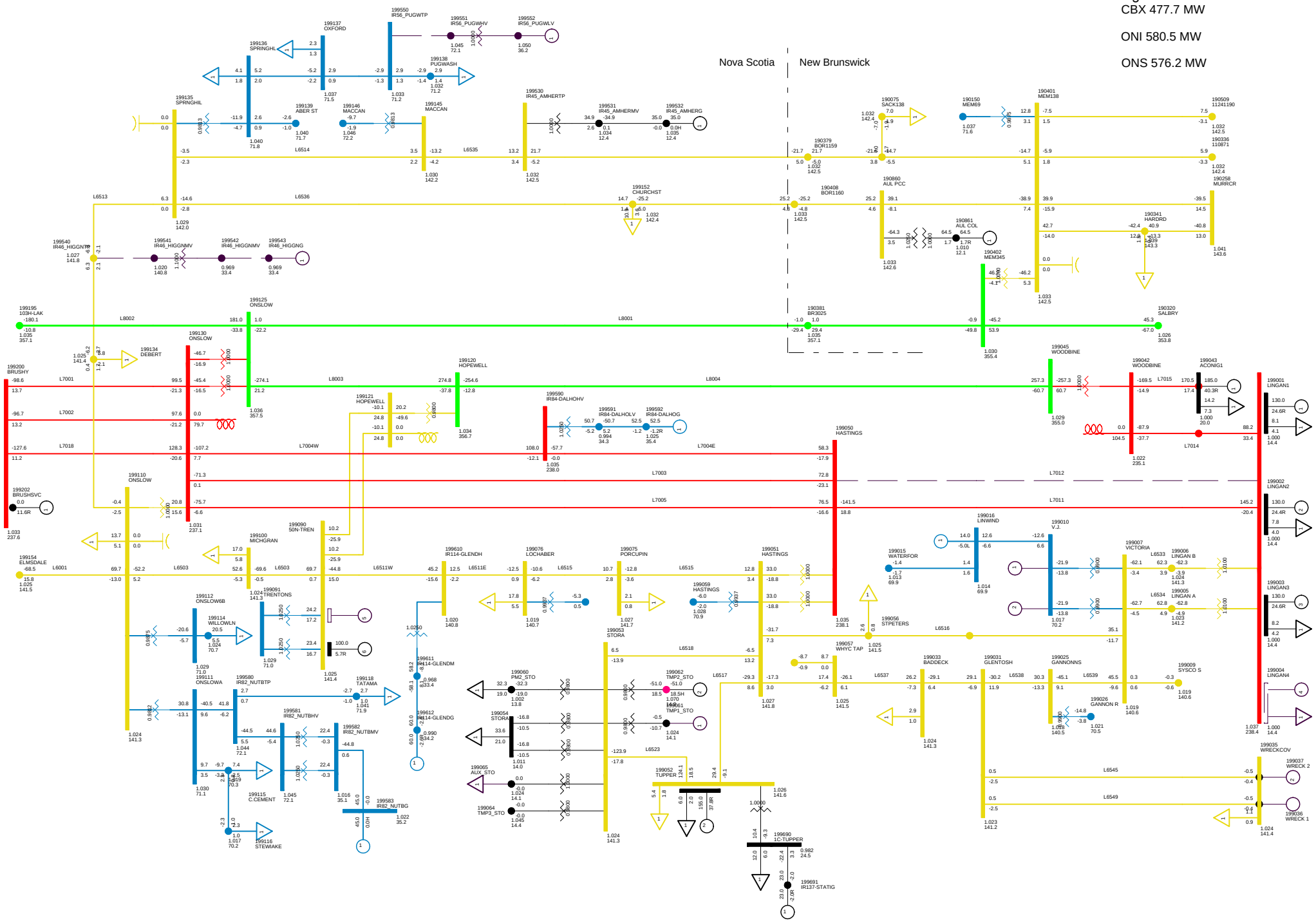

2013 LIGHT LOAD NS-NB=0
C05 LOSE L7012 NO SPS
NORTHEASTERN NS TUE, DEC 09 2008 21:42

Total Wind Gen: 290.1 MW
Gross Lingan 390.0 MW
Gross Pt Aconi 185.0 MW
Gross Tupper 155.0 MW
Gross Trenton 100.0 MW
Gross Tuft's Cove 0.0 MW
Gross Wreck Cove 0.0 MW
Gross Gas Turbine 0.0 MW
Gross Small Hydro 26.0 MW
Net Stora Load 117.4 MW
Total BMPC Load 42.5 MW

Bus - VOLTAGE (KV/PU)
Branch - MW/MVAR
Equipment - MW/MVAR
110.0%RATEA
1.050OV 0.950UV
KV: <=25.000 <=69.000 <=138.000 <=230.000 <=345.000 >345.000

Figure ___

NSX -1.6 MW

CBX 478.6 MW

ONI 581.4 MW

ONS 576.2 MW

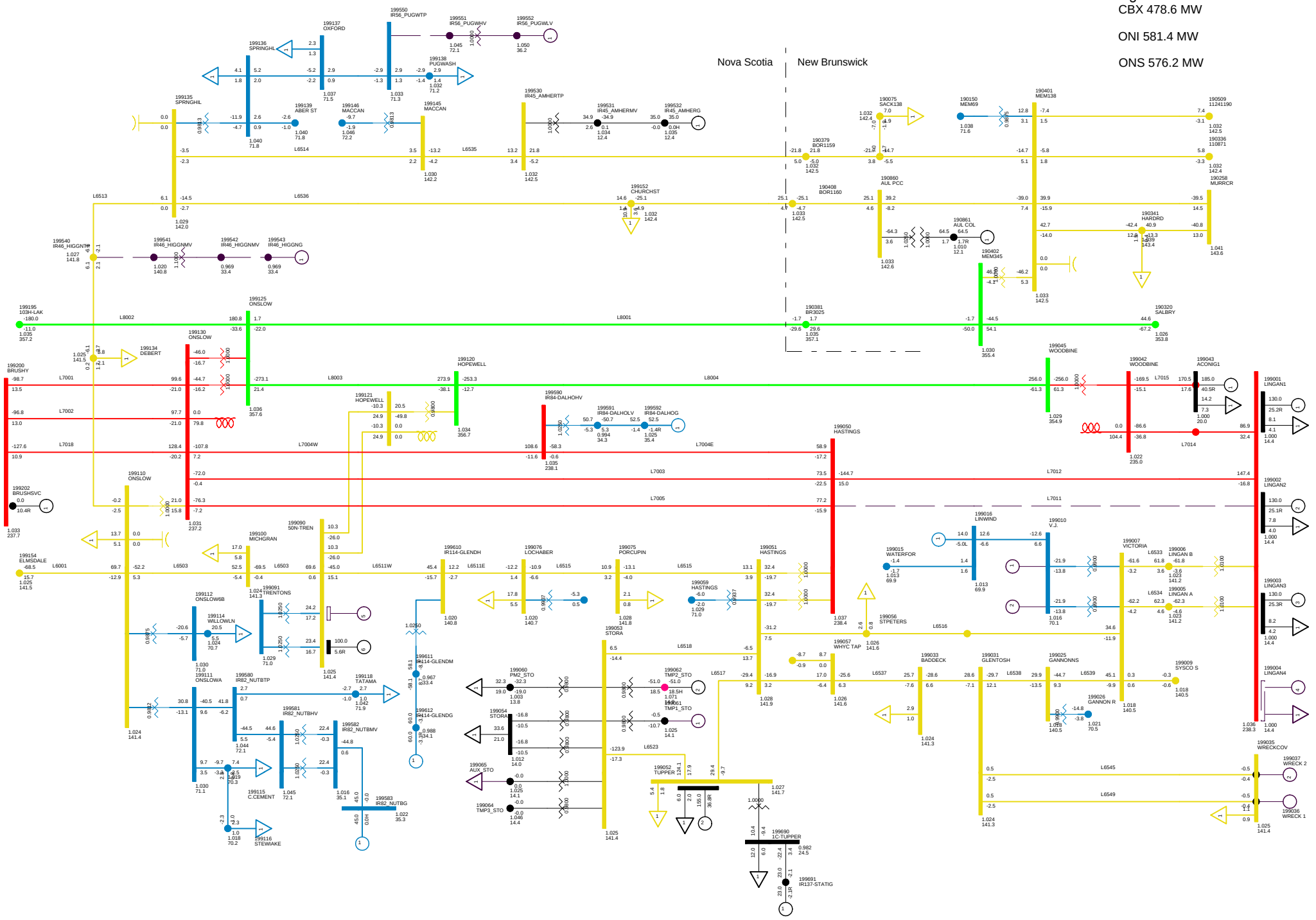

2013 LIGHT LOAD NS-NB=0
C06 LOSE L7011
NORTHEASTERN NS TUE, DEC 09 2008 21:42

Total Wind Gen: 290.1 MW | Gross Tupper 155.0 MW | Gross Wreck Cove 0.0 MW | Net Stora Load 117.4 MW
Gross Lingan 390.0 MW | Gross Trenton 100.0 MW | Gross Gas Turbine 0.0 MW | Total BMPC Load 42.5 MW
Gross Pt Aconi 185.0 MW | Gross Tuft's Cove 0.0 MW | Gross Small Hydro 26.0 MW

Bus - VOLTAGE (KV/PU)
Branch - MW/MVAR
Equipment - MW/MVAR
110.0%RATEA
1.050OV 0.950UV
KV: <=25.000 <=69.000 <=138.000 <=230.000 <=345.000 >345.000

Figure ___

NSX -3.1 MW

CBX 480.1 MW

ONI 580.0 MW

ONS 576.3 MW

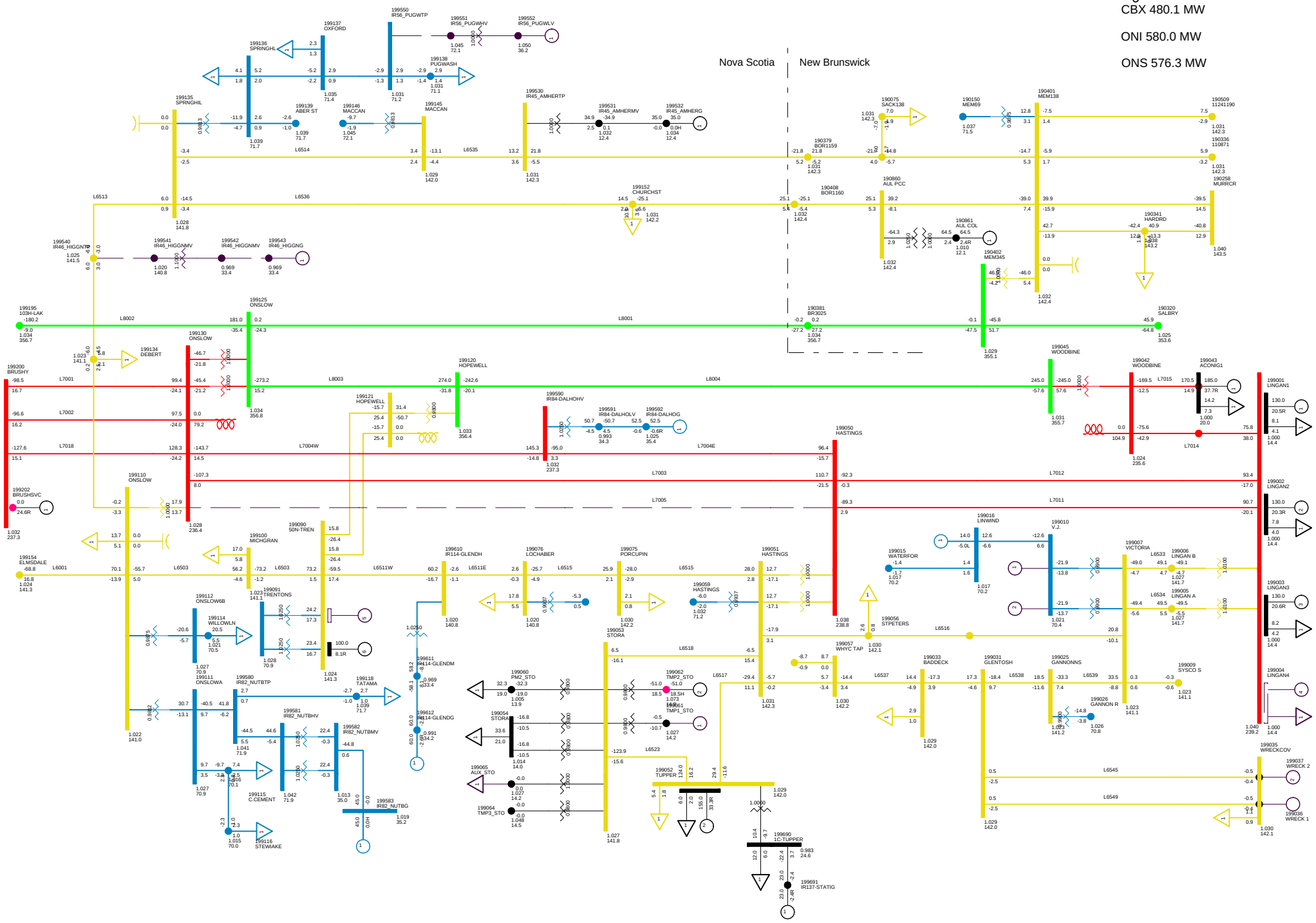

2013 LIGHT LOAD NS-NB=0
C07 LOSE L7005
NORTHEASTERN NS TUE, DEC 09 2008 21:42

Total Wind Gen: 290.1 MW | Gross Tupper 155.0 MW | Gross Wreck Cove 0.0 MW | Net Stora Load 117.4 MW
Gross Lingan 390.0 MW | Gross Trenton 100.0 MW | Gross Gas Turbine 0.0 MW | Total BMPC Load 42.5 MW
Gross Pt Aconi 185.0 MW | Gross Tuft's Cove 0.0 MW | Gross Small Hydro 26.0 MW

Bus - VOLTAGE (KV/PU)
Branch - MW/MVAR
Equipment - MW/MVAR
110.0%RATEA
1.050OV 0.950UV
KV: <=25.000 <=69.000 <=138.000 <=230.000 <=345.000 >345.000

Figure ___

NSX -3.0 MW

CBX 479.7 MW

ONI 582.1 MW

ONS 578.3 MW

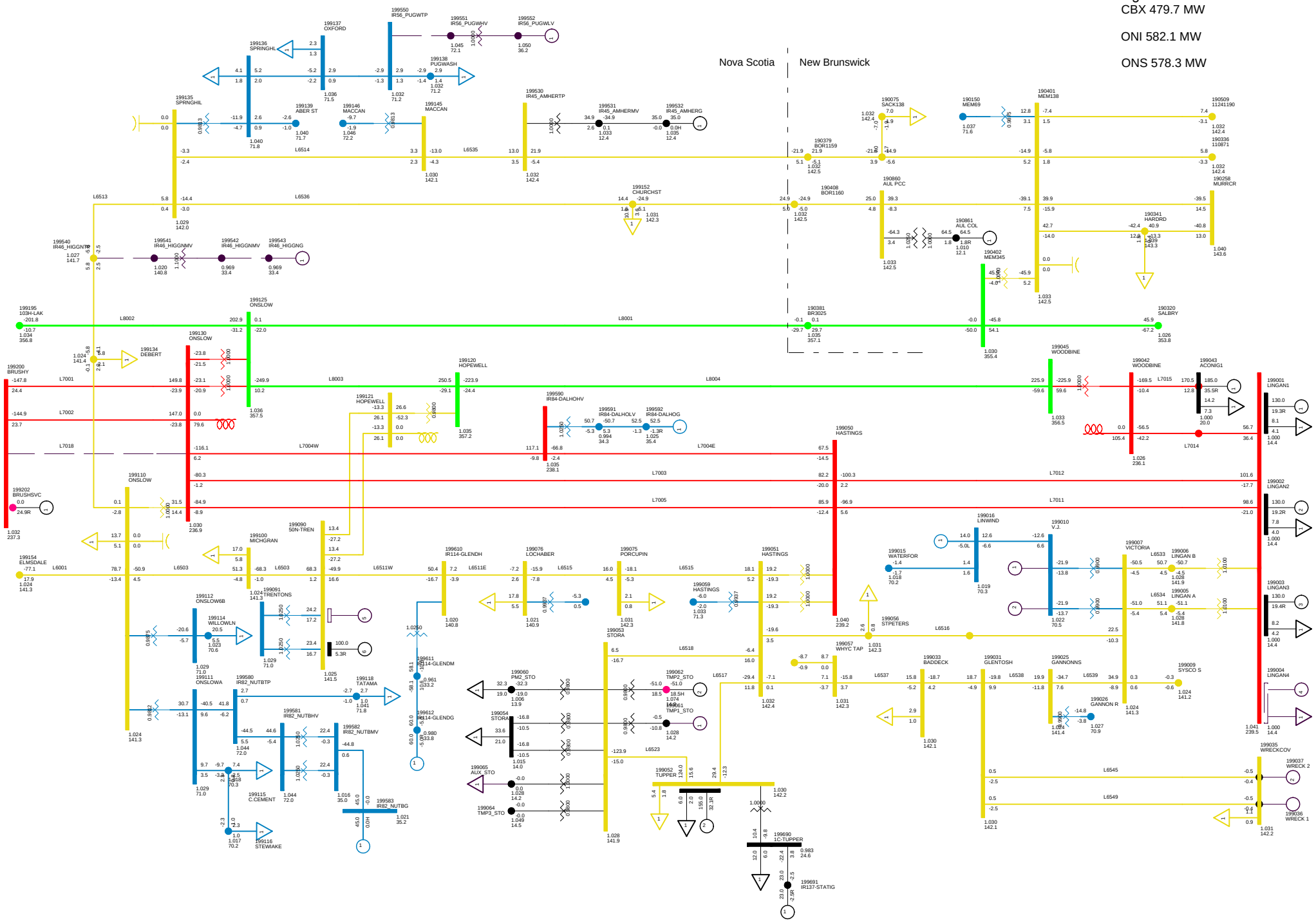

2013 LIGHT LOAD NS-NB=0
C08 LOSE L7018
NORTHEASTERN NS TUE, DEC 09 2008 21:42

Total Wind Gen: 290.1 MW | Gross Tupper 155.0 MW | Gross Wreck Cove 0.0 MW | Net Stora Load 117.4 MW
Gross Lingan 390.0 MW | Gross Trenton 100.0 MW | Gross Gas Turbine 0.0 MW | Total BMPC Load 42.5 MW
Gross Pt Aconi 185.0 MW | Gross Tuft's Cove 0.0 MW | Gross Small Hydro 26.0 MW

Bus - VOLTAGE (KV/PU)
Branch - MW/MVAR
Equipment - MW/MVAR
110.0%RATEA
1.050UV 0.950UV
KV: <=25.000 <=69.000 <=138.000 <=230.000 <=345.000 >345.000

Figure ___

Total Wind Gen: 290.1 MW | Gross Tupper 155.0 MW | Gross Wreck Cove 0.0 MW

Gross Lingan 390.0 MW | Gross Trenton 100.0 MW | Gross Gas Turbine 0.0 MW

Gross Pt Aconi 185.0 MW | Gross Tuft's Cove 0.0 MW | Gross Small Hydro 26.0 MW

Net Stora Load 117.4 MW | Total BMPC Load 42.5 MW

NSX -1.1 MW

CBX 479.6 MW

ONI 582.1 MW

ONS 576.4 MW

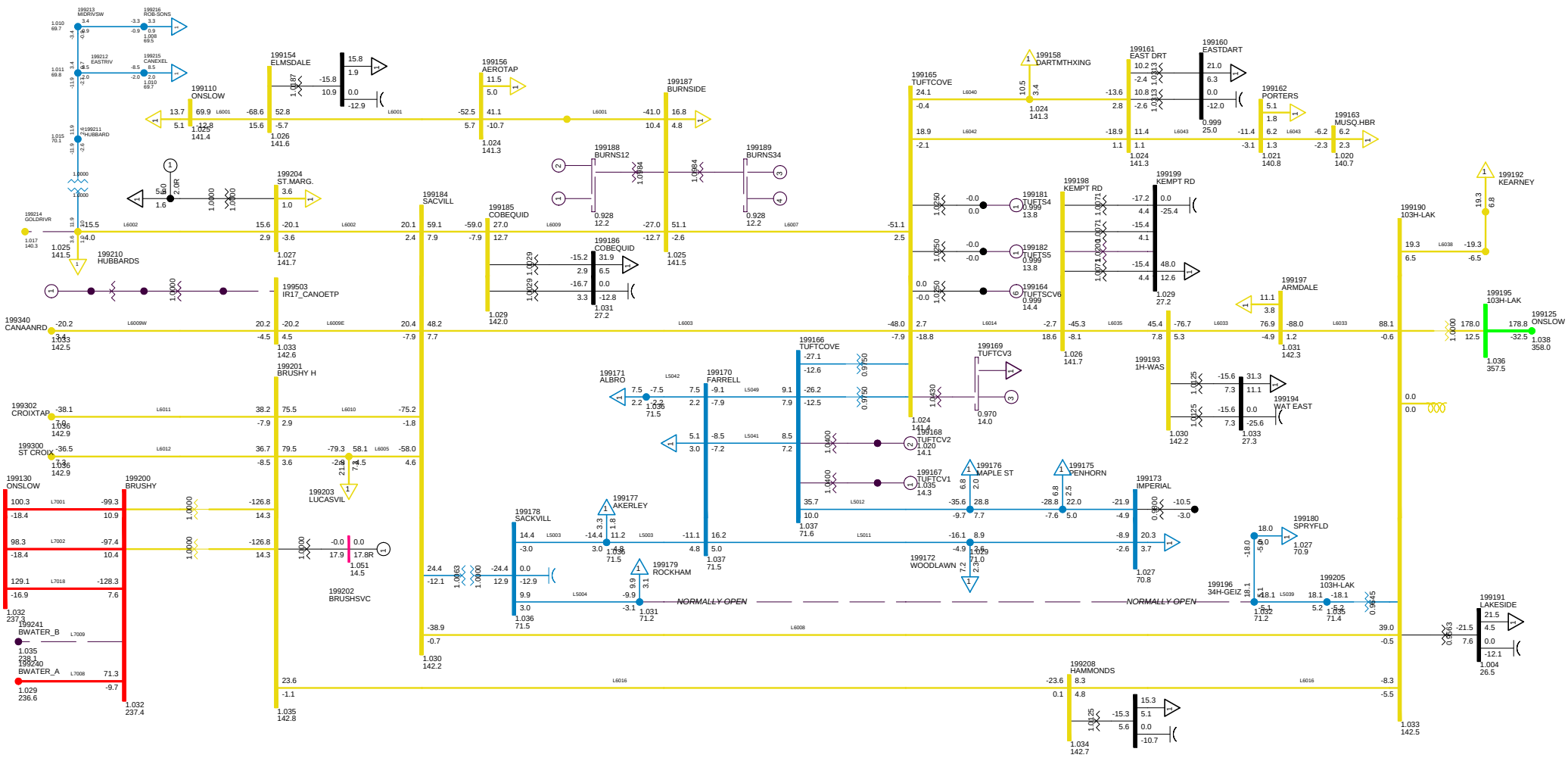

2013 LIGHT LOAD NS-NB=0
C09 LOSE L7009
METRO ZONE TUE, DEC 09 2008 21:43

Bus - VOLTAGE (KV/PU)
Branch - MW/MVAR
Equipment - MW/MVAR
100.0%RATEA
1.050OV 0.950UV
KV: <=30.000 <=69.000 <=138.000 <=230.000 <=345.000 >345.000

Figure __

NSX -3.6 MW

CBX 480.2 MW

ONI 579.5 MW

ONS 576.3 MW

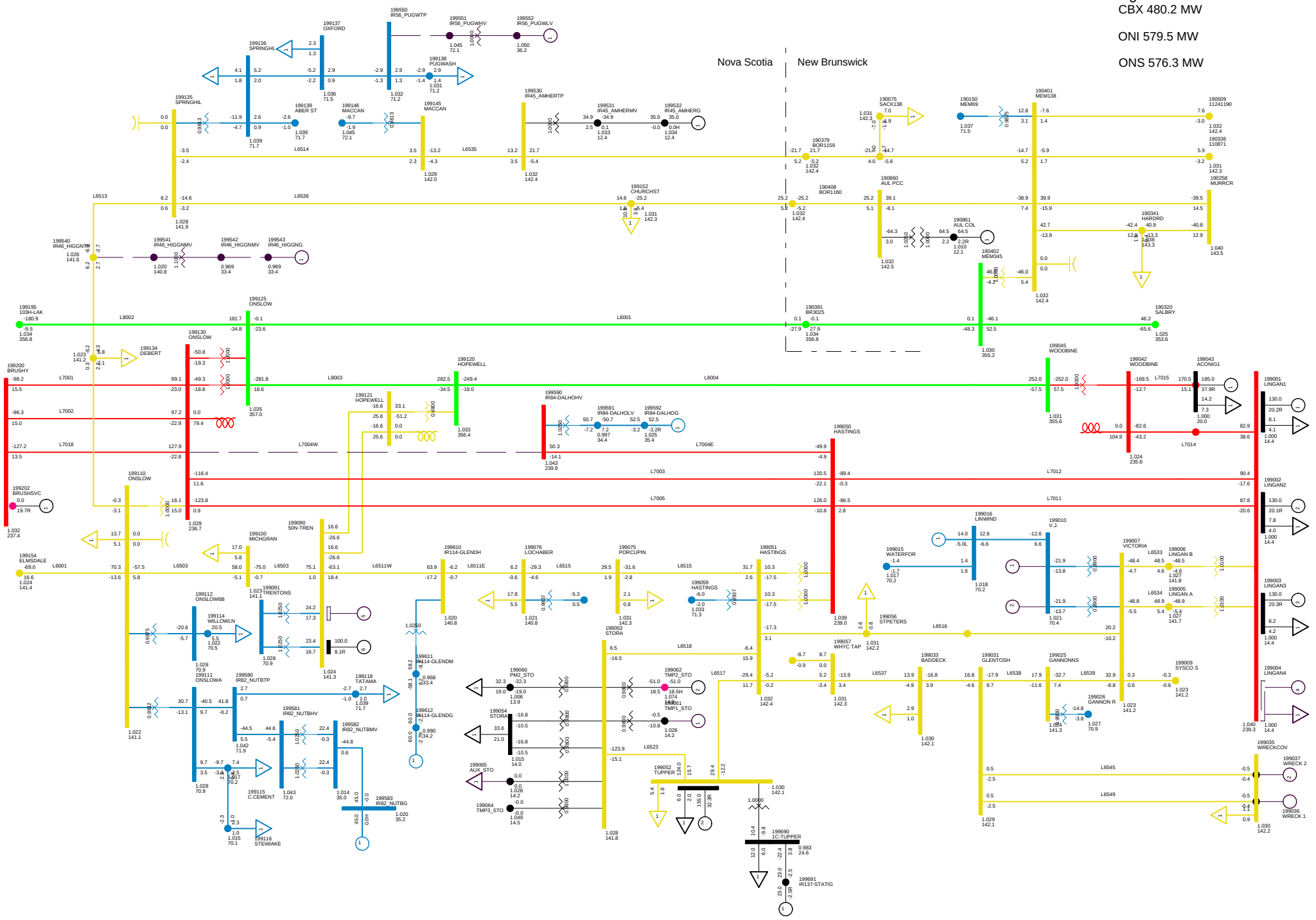

2013 LIGHT LOAD NS-NB=0
C10 LOSE L7004 WEST
NORTHEASTERN NS TUE, DEC 09 2008 21:43

Total Wind Gen: 290.1 MW
Gross Lingan 390.0 MW
Gross Pt Aconi 185.0 MW
Gross Tupper 155.0 MW
Gross Trenton 100.0 MW
Gross Tuft's Cove 0.0 MW
Gross Wreck Cove 0.0 MW
Gross Gas Turbine 0.0 MW
Gross Small Hydro 26.0 MW
Net Stora Load 117.4 MW
Total BMPC Load 42.5 MW

Bus - VOLTAGE (KV/PU)
Branch - MW/MVAR
Equipment - MW/MVAR
110.0%RATEA
1.0500V 0.950UV
KV: <=25.000 <=69.000 <=138.000 <=230.000 <=345.000 >345.000

Figure ___

NSX -3.5 MW

CBX 478.1 MW

ONI 579.6 MW

ONS 576.3 MW

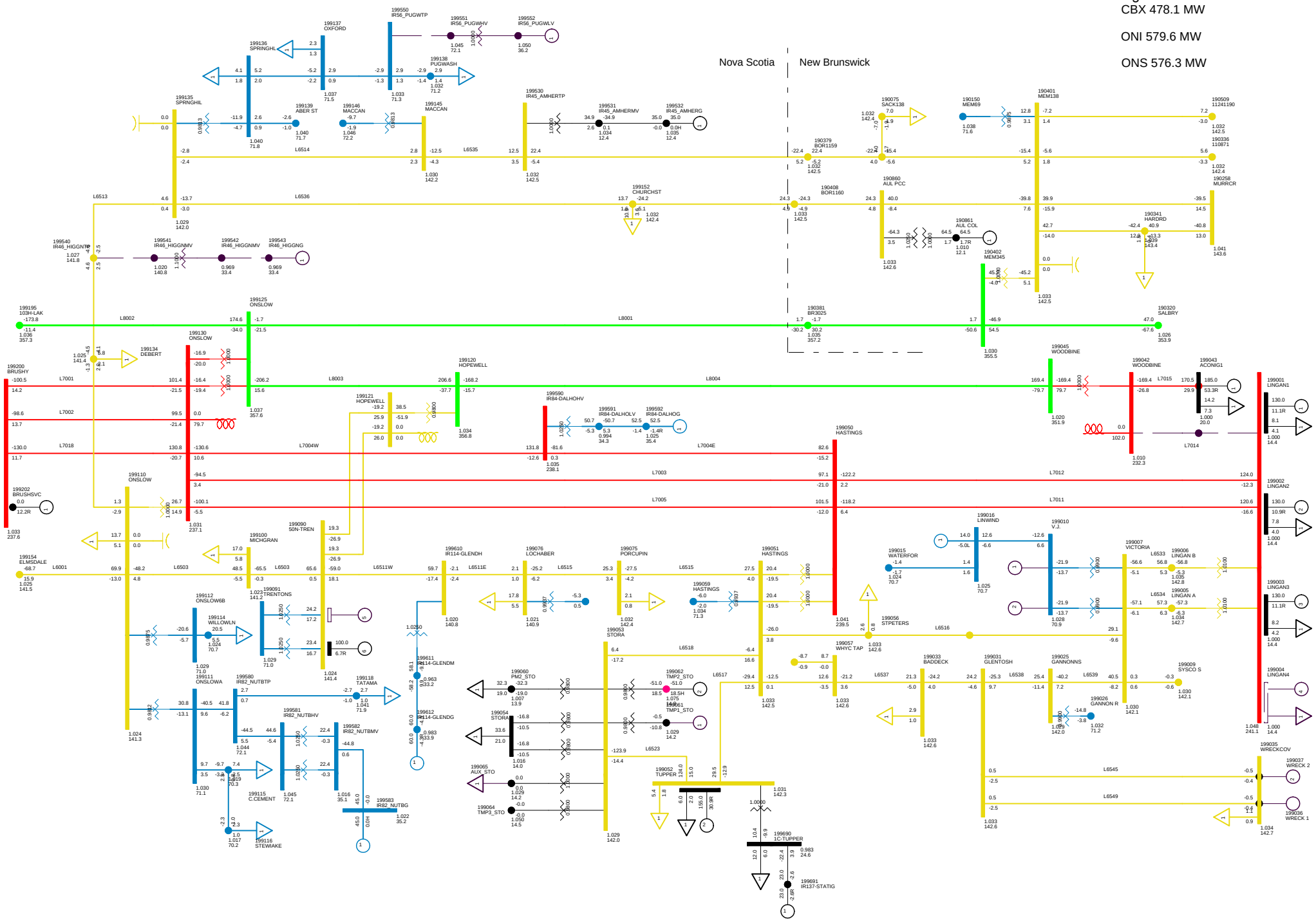

2013 LIGHT LOAD NS-NB=0
C11 LOSE L7014
NORTHEASTERN NS TUE, DEC 09 2008 21:43

Total Wind Gen: 290.1 MW
Gross Lingan 390.0 MW
Gross Pt Aconi 185.0 MW
Gross Tupper 155.0 MW
Gross Trenton 100.0 MW
Gross Tuft's Cove 0.0 MW
Gross Wreck Cove 0.0 MW
Gross Gas Turbine 0.0 MW
Gross Small Hydro 26.0 MW
Net Stora Load 117.4 MW
Total BMPC Load 42.5 MW

Bus - VOLTAGE (KV/PU)
Branch - MW/MVAR
Equipment - MW/MVAR
110.0%RATEA
1.050UV 0.950UV
KV: <=25.000 <=69.000 <=138.000 <=230.000 <=345.000 >345.000

Figure ___

NSX -0.9 MW

CBX 479.7 MW

ONI 582.1 MW

ONS 576.2 MW

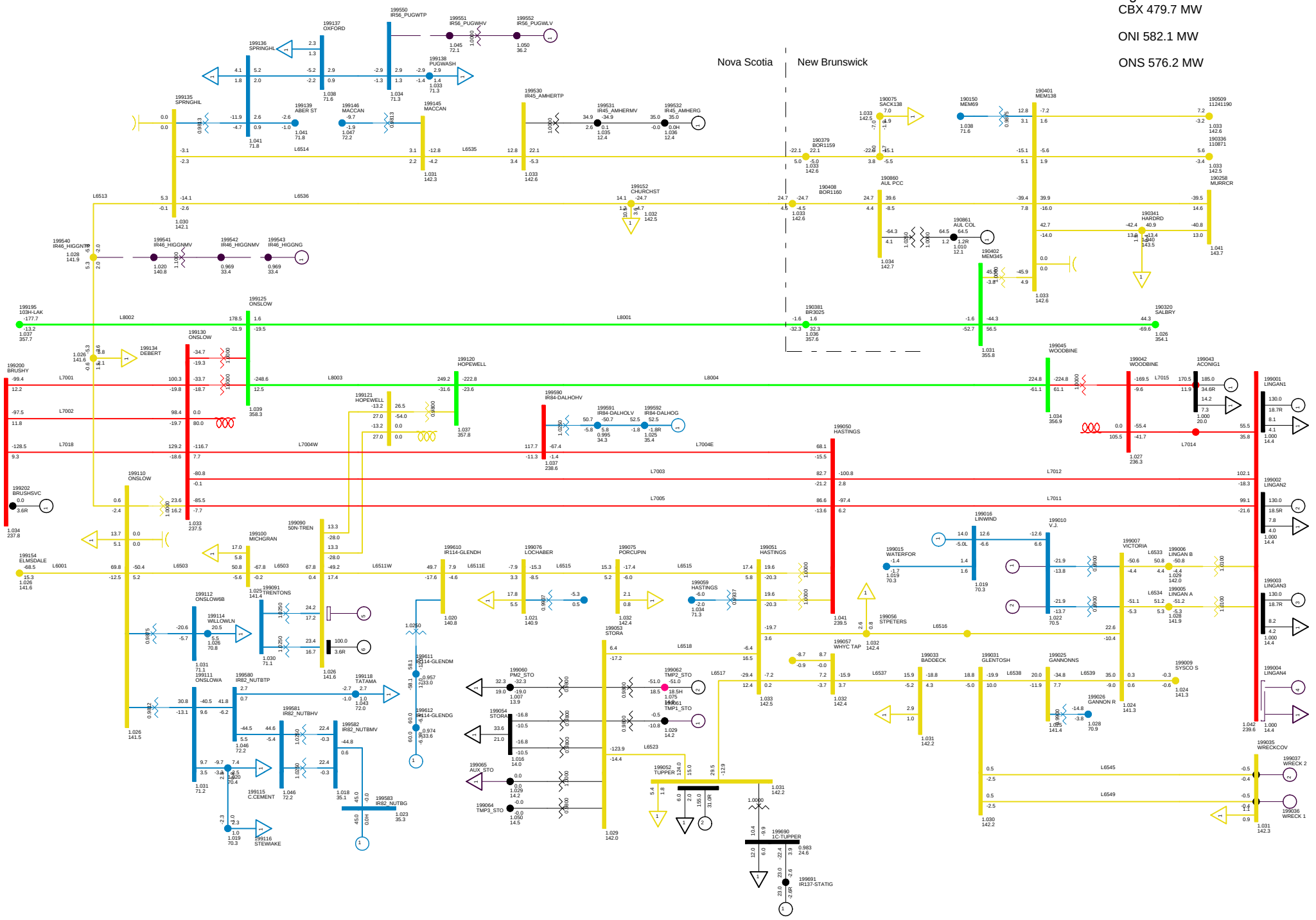

2010 LIGHT, NSLOAD=1150
NS-NB=0; NB-NE=0; CBX=469; ONI=482 ONS=475
NORTHEASTERN NS TUE, DEC 09 2008 21:43

Total Wind Gen: 290.1 MW
Gross Lingan 390.0 MW
Gross Pt Aconi 185.0 MW
Gross Tupper 155.0 MW
Gross Trenton 100.0 MW
Gross Tuft's Cove 0.0 MW
Gross Wreck Cove 0.0 MW
Gross Gas Turbine 0.0 MW
Gross Small Hydro 26.0 MW
Net Stora Load 117.4 MW
Total BMPC Load 42.5 MW

Bus - VOLTAGE (KV/PU)
Branch - MW/MVAR
Equipment - MW/MVAR
110.0%RATEA
1.0500V 0.950UV
KV: <=25.000 <=69.000 <=138.000 <=230.000 <=345.000 >345.000

Figure ___

NSX 15.7 MW

CBX 479.6 MW

ONI 598.5 MW

ONS 576.1 MW

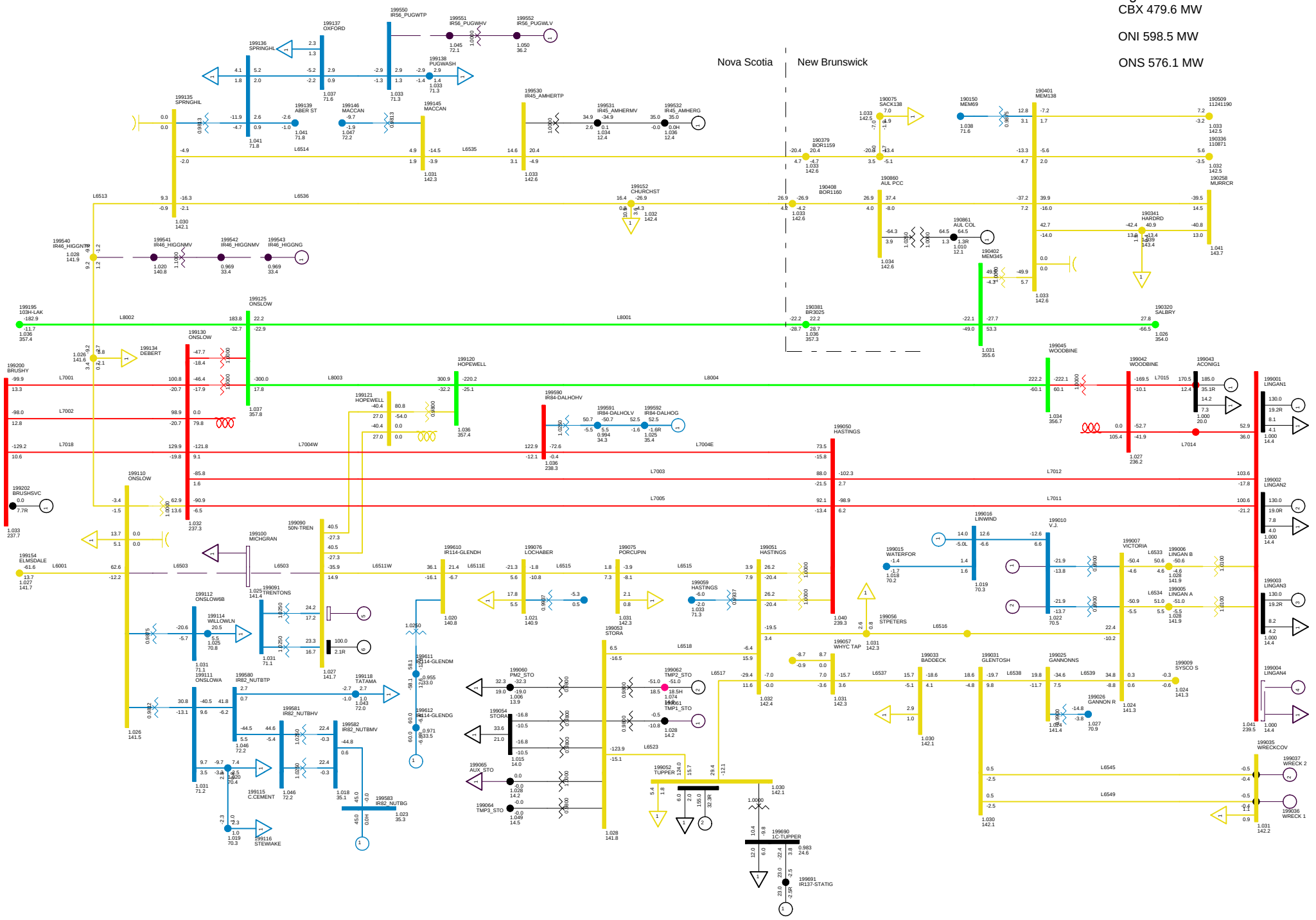

2013 LIGHT LOAD NS-NB=0
C12 LOSE 6503
NORTHEASTERN NS TUE, DEC 09 2008 21:43

Total Wind Gen: 290.1 MW
Gross Lingan 390.0 MW
Gross Pt Aconi 185.0 MW
Gross Tupper 155.0 MW
Gross Trenton 100.0 MW
Gross Tuft's Cove 0.0 MW
Gross Wreck Cove 0.0 MW
Gross Gas Turbine 0.0 MW
Gross Small Hydro 26.0 MW
Net Stora Load 117.4 MW
Total BMPC Load 42.5 MW

Bus - VOLTAGE (KV/PU)
Branch - MW/MVAR
Equipment - MW/MVAR
110.0%RATEA
1.050UV 0.950UV
KV: <=25.000 <=69.000 <=138.000 <=230.000 <=345.000 >345.000

Figure ___

NSX 1.4 MW

CBX 479.8 MW

ONI 584.4 MW

ONS 576.2 MW

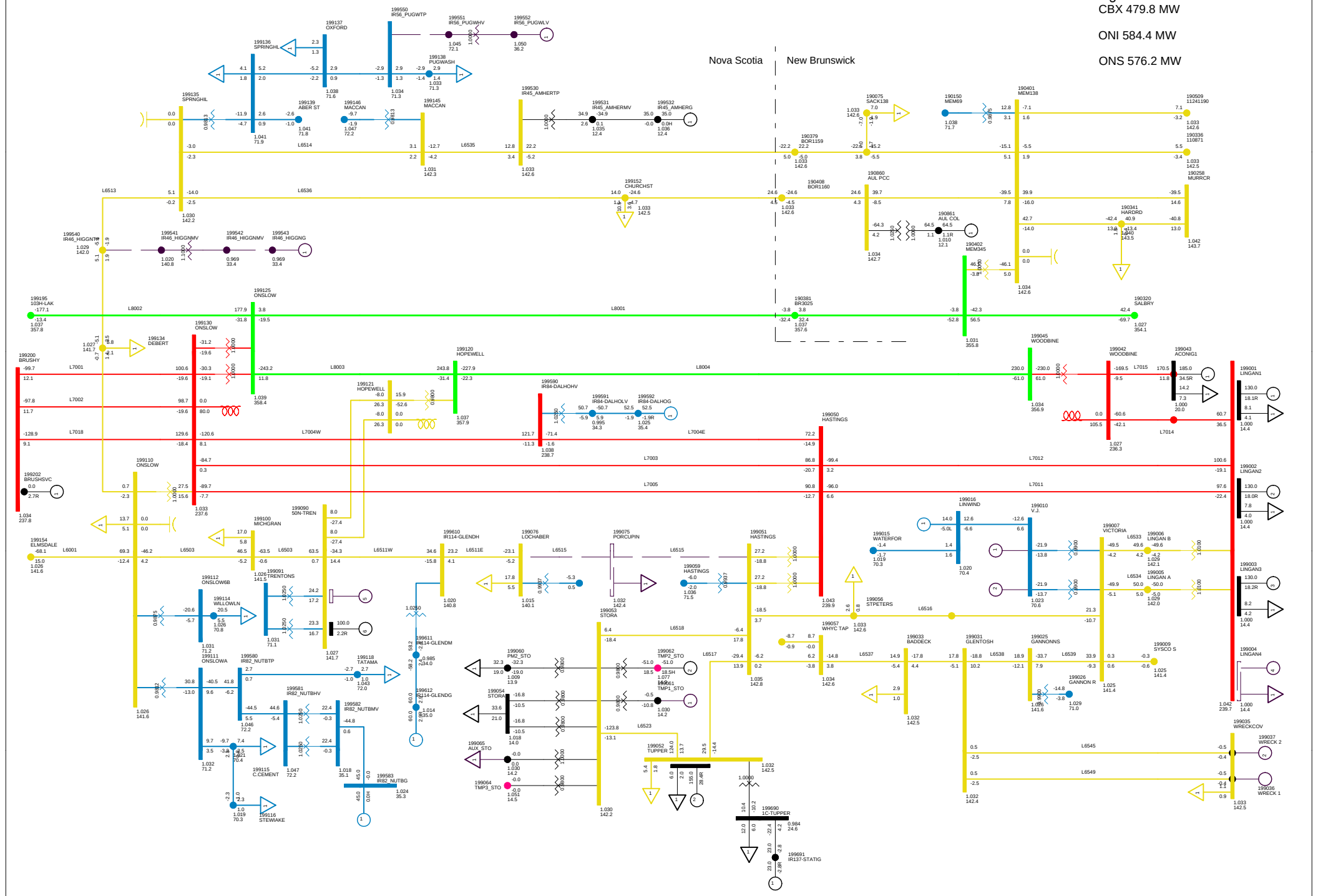

2013 LIGHT LOAD NS-NB=0
C13 LOSE L6511
NORTHEASTERN NS TUE, DEC 09 2008 21:43

Total Wind Gen: 290.1 MW | Gross Tupper 155.0 MW | Gross Wreck Cove 0.0 MW | Net Stora Load 117.4 MW
Gross Lingan 390.0 MW | Gross Trenton 100.0 MW | Gross Gas Turbine 0.0 MW | Total BMPC Load 42.5 MW
Gross Pt Aconi 185.0 MW | Gross Tuft's Cove 0.0 MW | Gross Small Hydro 26.0 MW

Bus - VOLTAGE (KV/PU)
Branch - MW/MVAR
Equipment - MW/MVAR
110.0%RATEA
1.050OV 0.950UV
KV: <=25.000 <=69.000 <=138.000 <=230.000 <=345.000 >345.000

Figure ___

NSX -0.9 MW

CBX 479.6 MW

ONI 582.1 MW

ONS 576.2 MW

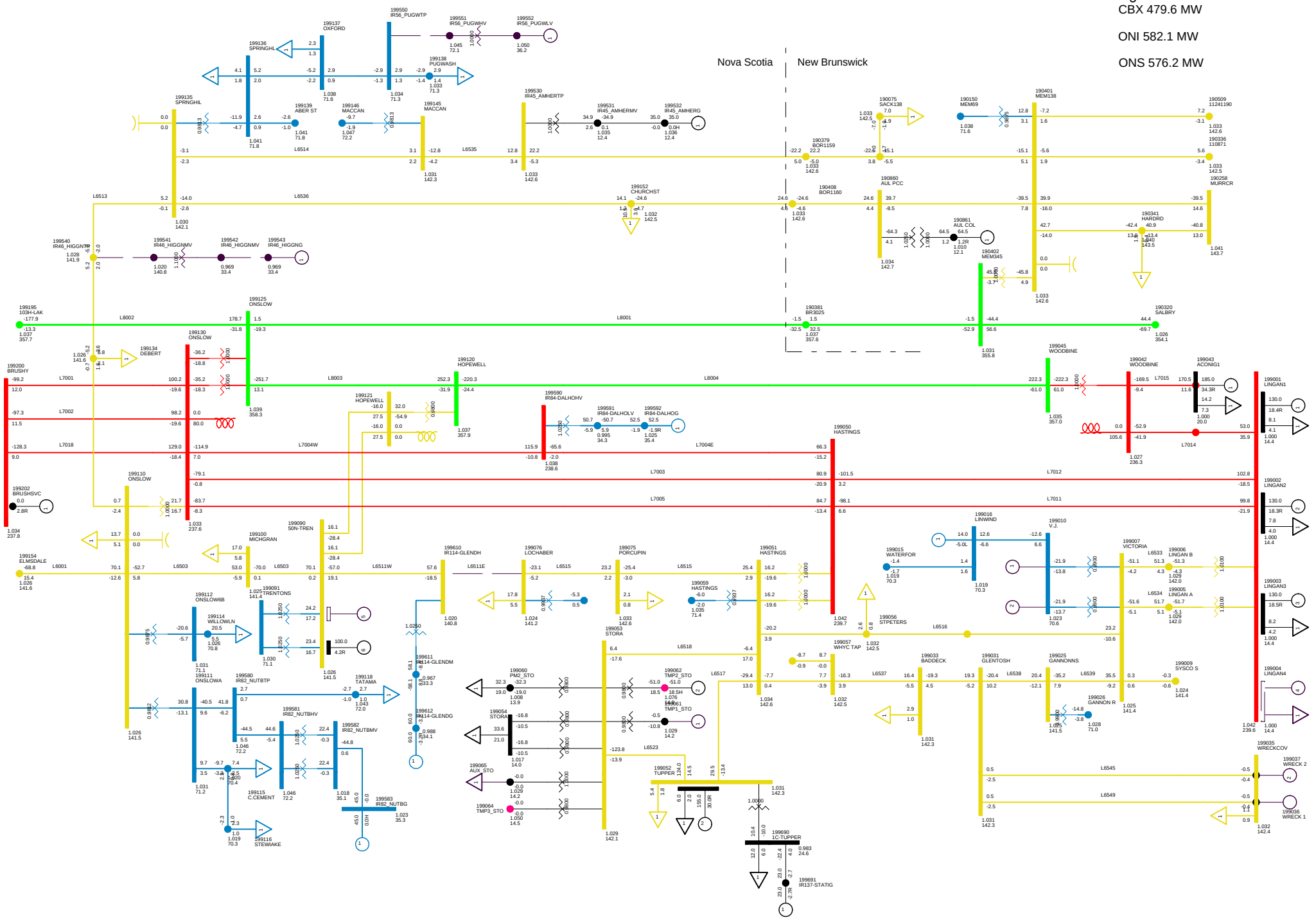

2013 LIGHT LOAD NS-NB=0
C14 LOSE L6511E
NORTHEASTERN NS TUE, DEC 09 2008 21:43

Total Wind Gen: 290.1 MW | Gross Tupper 155.0 MW | Gross Wreck Cove 0.0 MW | Net Stora Load 117.4 MW
Gross Lingan 390.0 MW | Gross Trenton 100.0 MW | Gross Gas Turbine 0.0 MW | Total BMPC Load 42.5 MW
Gross Pt Aconi 185.0 MW | Gross Tuft's Cove 0.0 MW | Gross Small Hydro 26.0 MW

Bus - VOLTAGE (KV/PU)
Branch - MW/MVAR
Equipment - MW/MVAR
110.0%RATEA
1.050OV 0.950UV
KV: <=25.000 <=69.000 <=138.000 <=230.000 <=345.000 >345.000

Figure ___

NSX -1.7 MW

CBX 480.0 MW

ONI 581.3 MW

ONS 576.2 MW

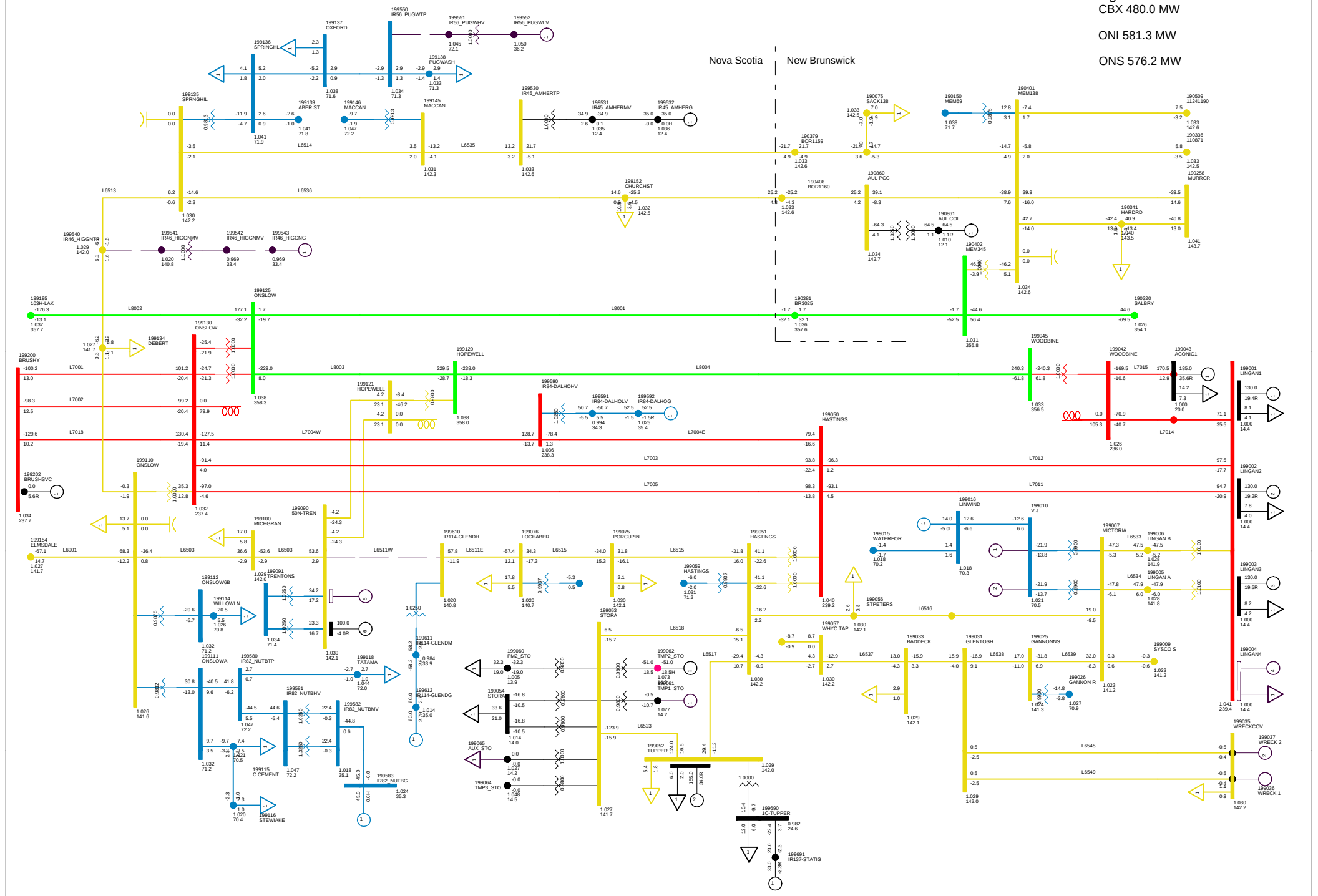

2013 LIGHT LOAD NS-NB=0
C15 LOSE L6511W
NORTHEASTERN NS TUE, DEC 09 2008 21:43

Total Wind Gen: 290.1 MW | Gross Tupper 155.0 MW | Gross Wreck Cove 0.0 MW | Net Stora Load 117.4 MW
Gross Lingan 390.0 MW | Gross Trenton 100.0 MW | Gross Gas Turbine 0.0 MW | Total BMPC Load 42.5 MW
Gross Pt Aconi 185.0 MW | Gross Tuft's Cove 0.0 MW | Gross Small Hydro 26.0 MW

Bus - VOLTAGE (KV/PU)
Branch - MW/MVAR
Equipment - MW/MVAR
110.0%RATEA
1.050OV 0.950UV
KV: <=25.000 <=69.000 <=138.000 <=230.000 <=345.000 >345.000

Figure ___

NSX 5.0 MW

CBX 479.7 MW

ONI 582.1 MW

ONS 576.2 MW

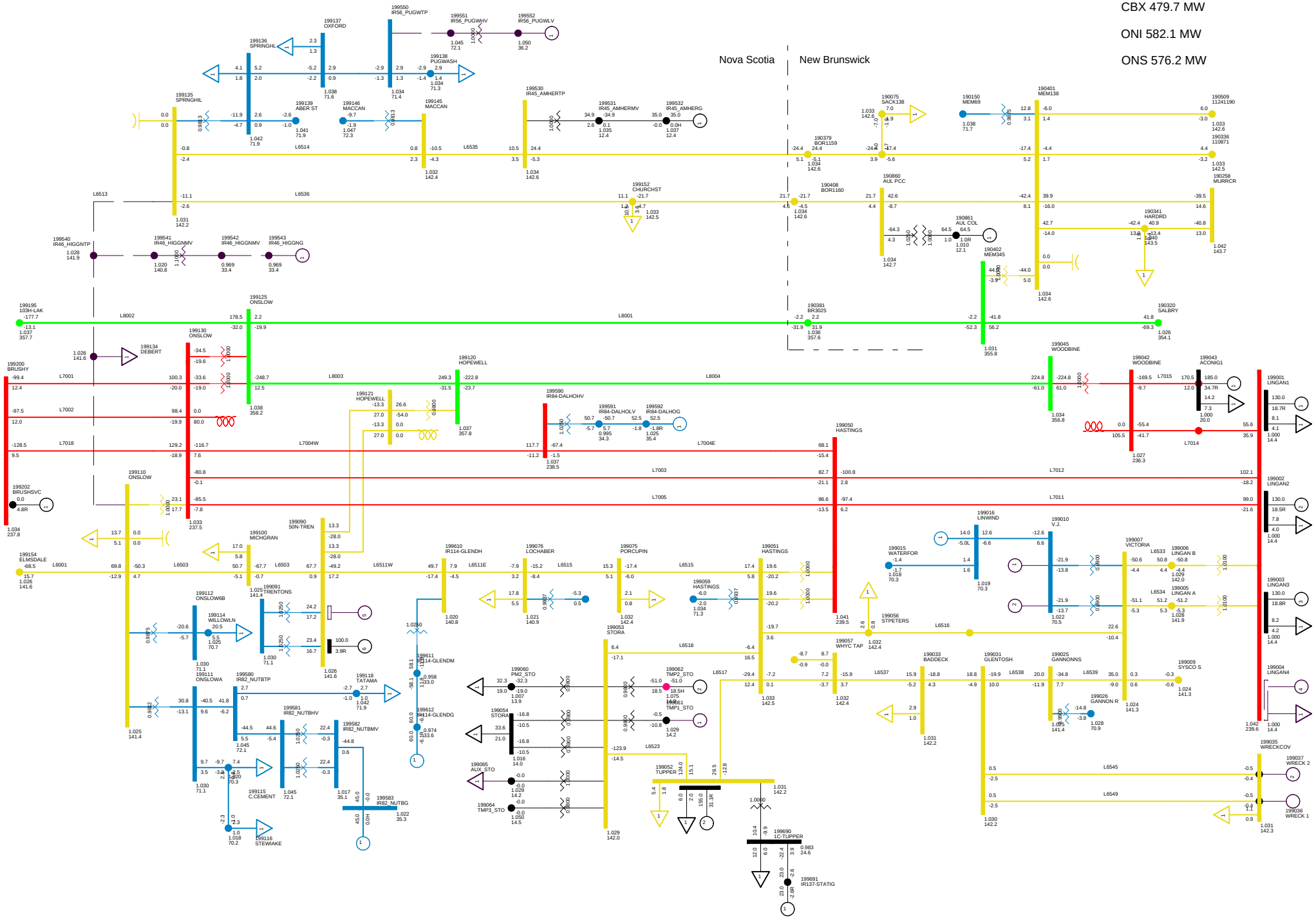

2013 LIGHT LOAD NS-NB=0
C16 LOSE L6513
NORTHEASTERN NS TUE, DEC 09 2008 21:43

Total Wind Gen: 290.1 MW
Gross Lingan 390.0 MW
Gross Pt Aconi 185.0 MW
Gross Tupper 155.0 MW
Gross Trenton 100.0 MW
Gross Tuft's Cove 0.0 MW
Gross Wreck Cove 0.0 MW
Gross Gas Turbine 0.0 MW
Gross Small Hydro 26.0 MW
Stora Load 117.4 MW
Total BMPC Load 42.5 MW

Bus - VOLTAGE (KV/PU)
Branch - MW/MVAR
Equipment - MW/MVAR
110.0%RATEA
1.0500V 0.950UV
KV: <=25.000 <=69.000 <=138.000 <=230.000 <=345.000 >345.000

Figure ___

NSX 9.6 MW

CBX 479.7 MW

ONI 582.1 MW

ONS 576.2 MW

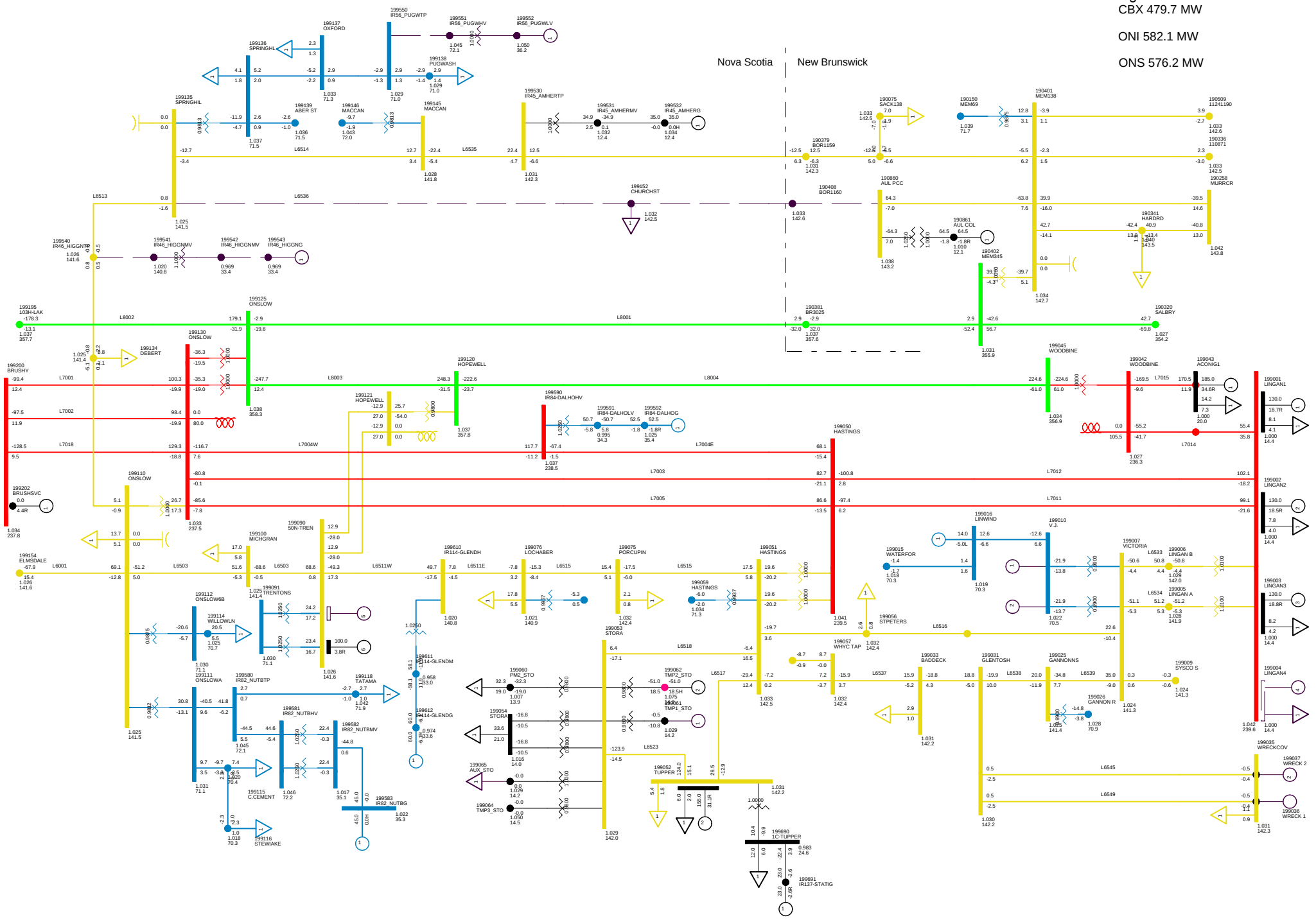

2013 LIGHT LOAD NS-NB=0
C17 LOSE L6536
NORTHEASTERN NS TUE, DEC 09 2008 21:44

Total Wind Gen: 290.1 MW
Gross Lingan 390.0 MW
Gross Pt Aconi 185.0 MW
Gross Tupper 155.0 MW
Gross Trenton 100.0 MW
Gross Tuft's Cove 0.0 MW
Gross Wreck Cove 0.0 MW
Gross Gas Turbine 0.0 MW
Gross Small Hydro 26.0 MW
Net Stora Load 117.4 MW
Total BMPC Load 42.5 MW

Bus - VOLTAGE (KV/PU)
Branch - MW/MVAR
Equipment - MW/MVAR
110.0%RATEA
1.0500V 0.950UV
KV: <=25.000 <=69.000 <=138.000 <=230.000 <=345.000 >345.000

Figure ___

NSX -0.9 MW

CBX 479.7 MW

ONI 582.1 MW

ONS 576.2 MW

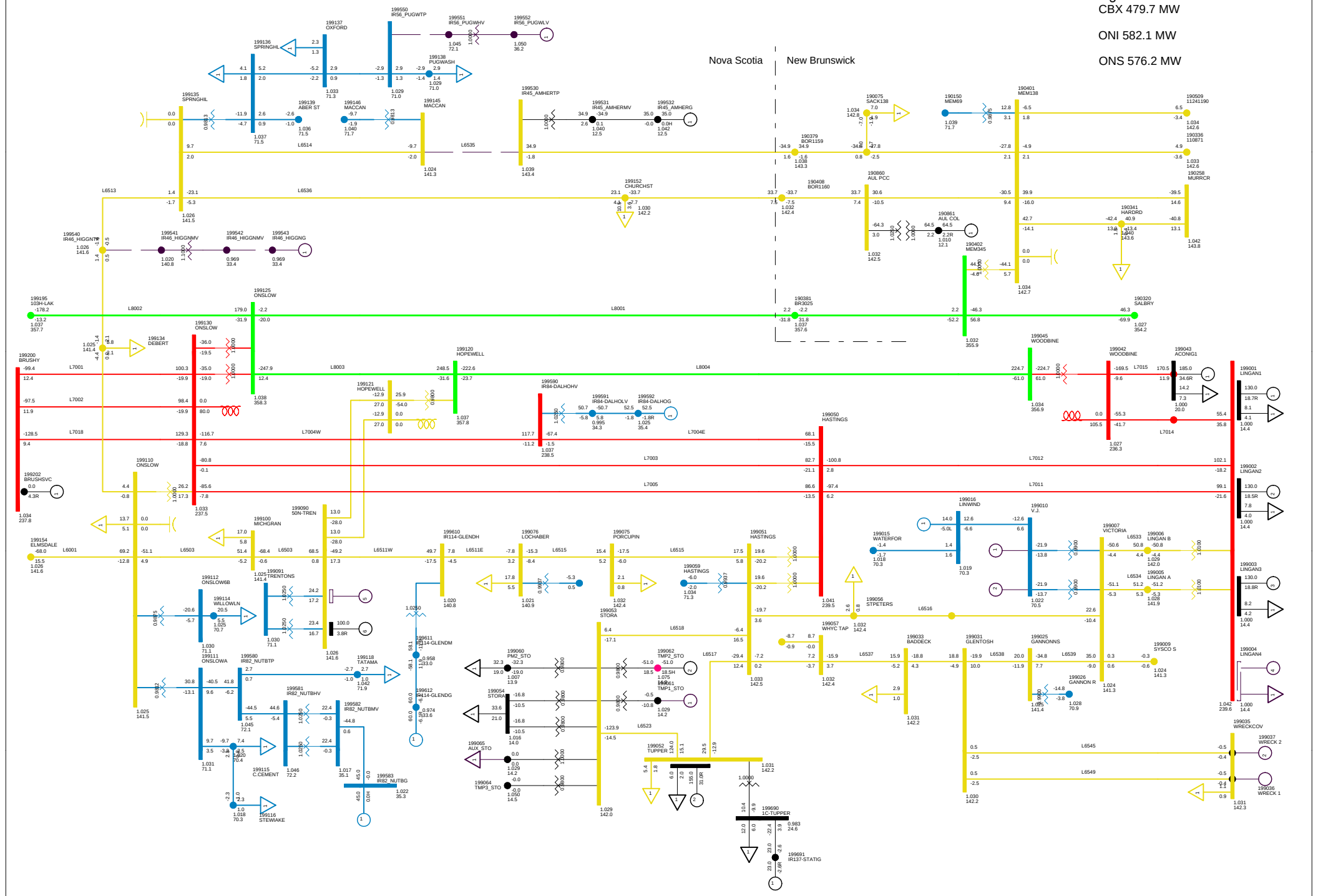

2013 LIGHT LOAD NS-NB=0
C18 LOSE L6535S
NORTHEASTERN NS TUE, DEC 09 2008 21:44

Total Wind Gen: 290.1 MW
Gross Lingan 390.0 MW
Gross Pt Aconi 185.0 MW
Gross Tupper 155.0 MW
Gross Trenton 100.0 MW
Gross Tuft's Cove 0.0 MW
Gross Wreck Cove 0.0 MW
Gross Gas Turbine 0.0 MW
Gross Small Hydro 26.0 MW
Net Stora Load 117.4 MW
Total BMPC Load 42.5 MW

Bus - VOLTAGE (KV/PU)
Branch - MW/MVAR
Equipment - MW/MVAR
110.0%RATEA
1.050OV 0.950UV
KV: <=25.000 <=69.000 <=138.000 <=230.000 <=345.000 >345.000

Figure ___

NSX -1.0 MW

CBX 479.7 MW

ONI 582.1 MW

ONS 576.2 MW

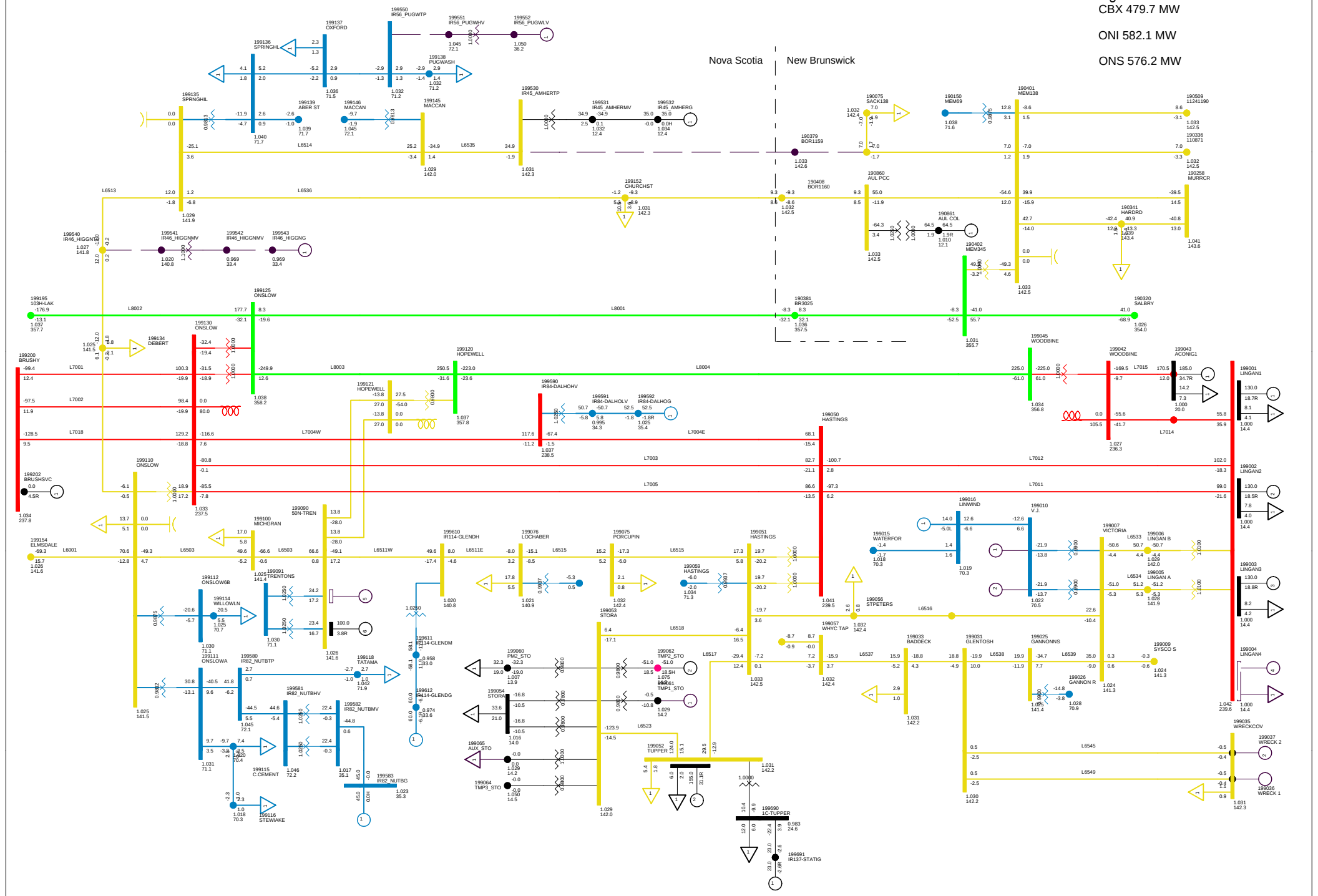

2013 LIGHT LOAD NS-NB=0
C19 LOSE L6535N
NORTHEASTERN NS TUE, DEC 09 2008 21:44

Total Wind Gen: 290.1 MW
Gross Lingan 390.0 MW
Gross Pt Aconi 185.0 MW
Gross Tupper 155.0 MW
Gross Trenton 100.0 MW
Gross Tuft's Cove 0.0 MW
Gross Wreck Cove 0.0 MW
Gross Gas Turbine 0.0 MW
Gross Small Hydro 26.0 MW
Net Stora Load 117.4 MW
Total BMPC Load 42.5 MW

Bus - VOLTAGE (KV/PU)
Branch - MW/MVAR
Equipment - MW/MVAR
110.0%RATEA
1.0500V 0.950UV
KV: <=25.000 <=69.000 <=138.000 <=230.000 <=345.000 >345.000

Figure ___

NSX 10.3 MW
CBX 491.2 MW
ONI 593.3 MW
ONS 576.2 MW

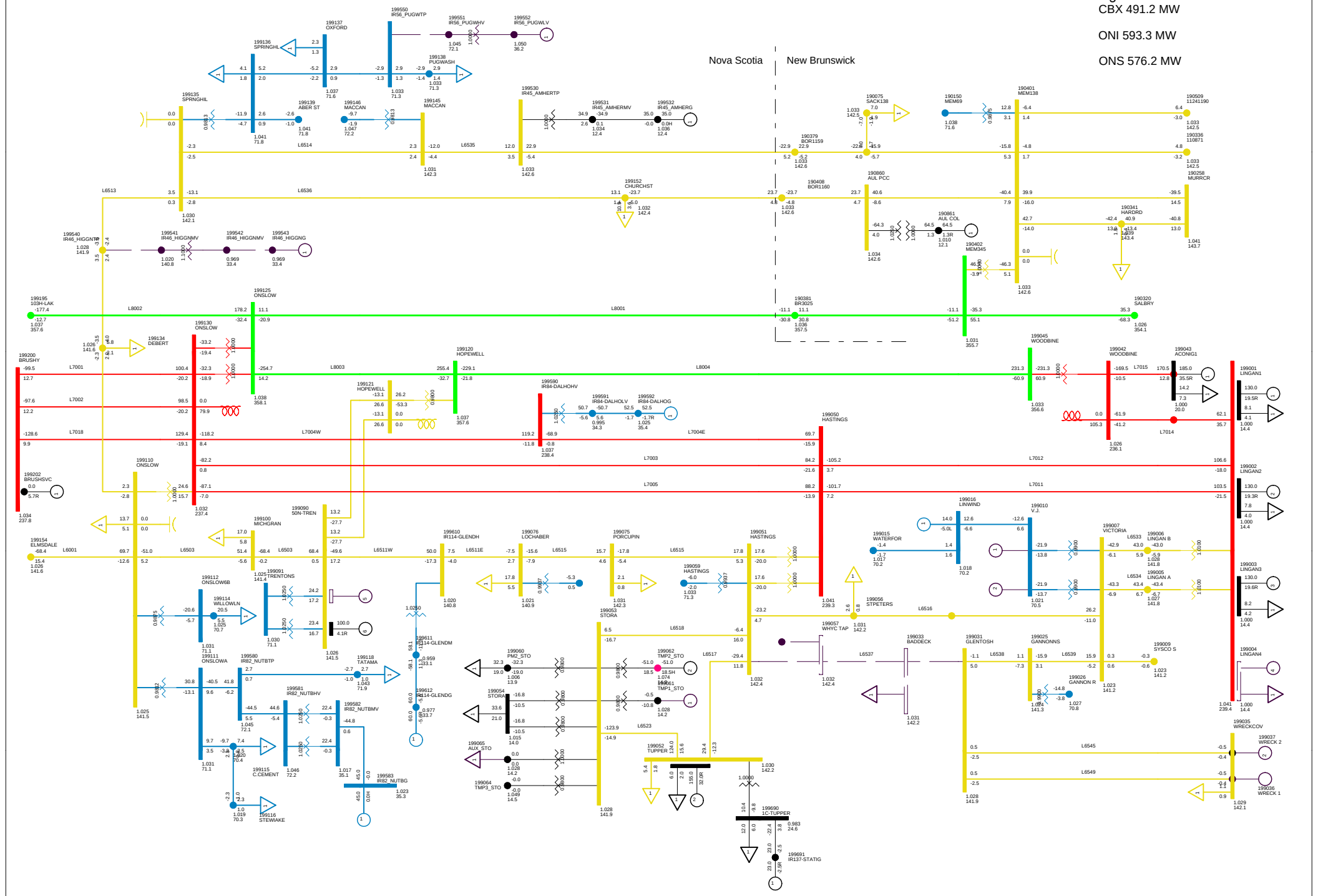

2013 LIGHT LOAD NS-NB=0
C20 LOSE L6537
NORTHEASTERN NS TUE, DEC 09 2008 21:44

Total Wind Gen: 290.1 MW
Gross Lingan 390.0 MW
Gross Pt Aconi 185.0 MW
Gross Tupper 155.0 MW
Gross Trenton 100.0 MW
Gross Tuft's Cove 0.0 MW
Gross Wreck Cove 0.0 MW
Gross Gas Turbine 0.0 MW
Gross Small Hydro 26.0 MW
Stora Load 117.4 MW
Total BMPC Load 42.5 MW

Bus - VOLTAGE (KV/PU)
Branch - MW/MVAR
Equipment - MW/MVAR
110.0%RATEA
1.050UV 0.950UV
KV: <=25.000 <=69.000 <=138.000 <=230.000 <=345.000 >345.000

Figure ___

NSX 1.5 MW

CBX 482.1 MW

ONI 584.5 MW

ONS 576.2 MW

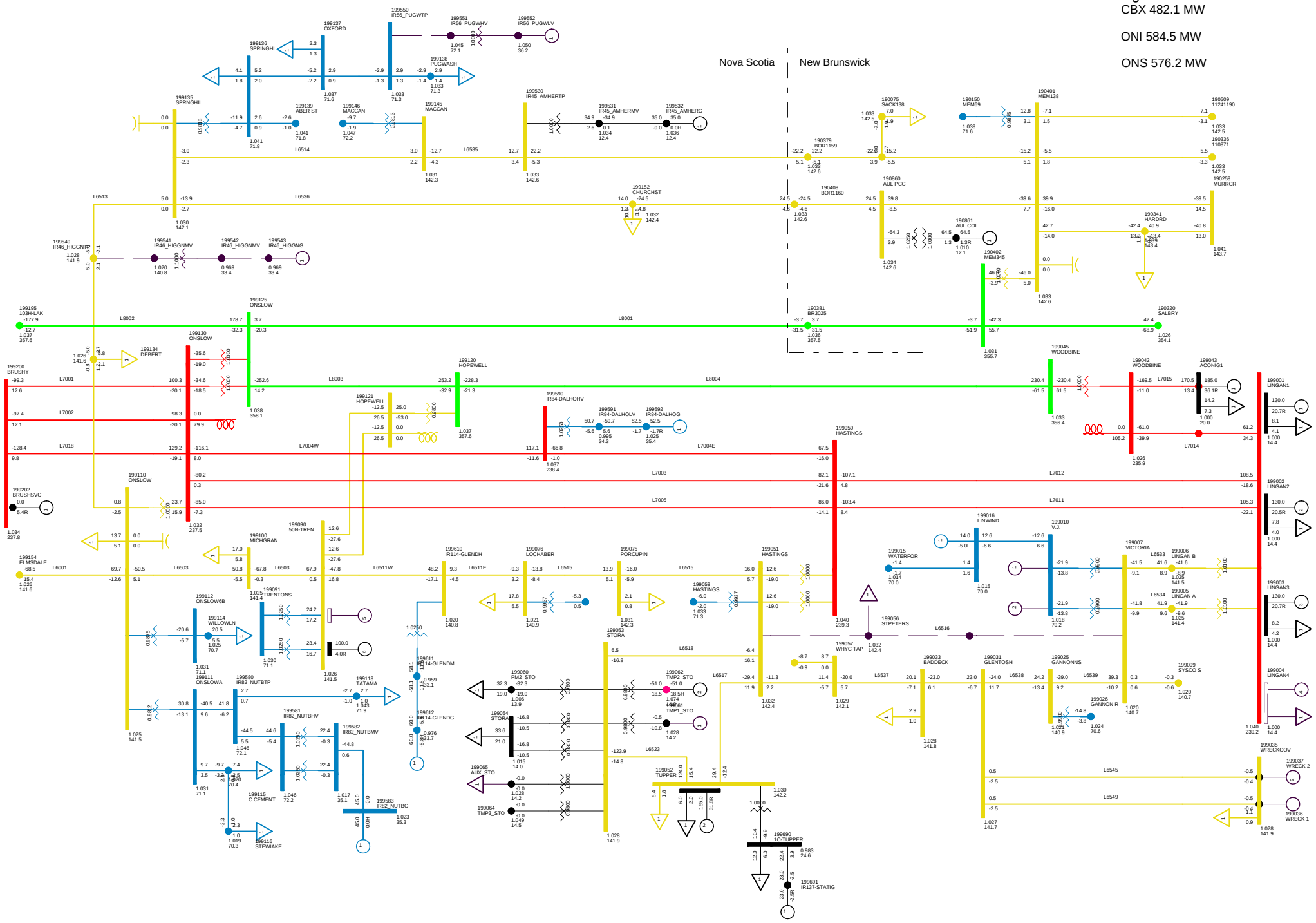

2013 LIGHT LOAD NS-NB=0
C21 LOSE L6516
NORTHEASTERN NS TUE, DEC 09 2008 21:44

Total Wind Gen: 290.1 MW
Gross Lingan 390.0 MW
Gross Pt Aconi 185.0 MW
Gross Tupper 155.0 MW
Gross Trenton 100.0 MW
Gross Tuft's Cove 0.0 MW
Gross Wreck Cove 0.0 MW
Gross Gas Turbine 0.0 MW
Gross Small Hydro 26.0 MW
Net Stora Load 117.4 MW
Total BMPC Load 42.5 MW

Bus - VOLTAGE (KV/PU)
Branch - MW/MVAR
Equipment - MW/MVAR
110.0%RATEA
1.050UV 0.950UV
KV: <=25.000 <=69.000 <=138.000 <=230.000 <=345.000 >345.000

Figure ___

NSX -1.1 MW

CBX 479.4 MW

ONI 581.9 MW

ONS 576.2 MW

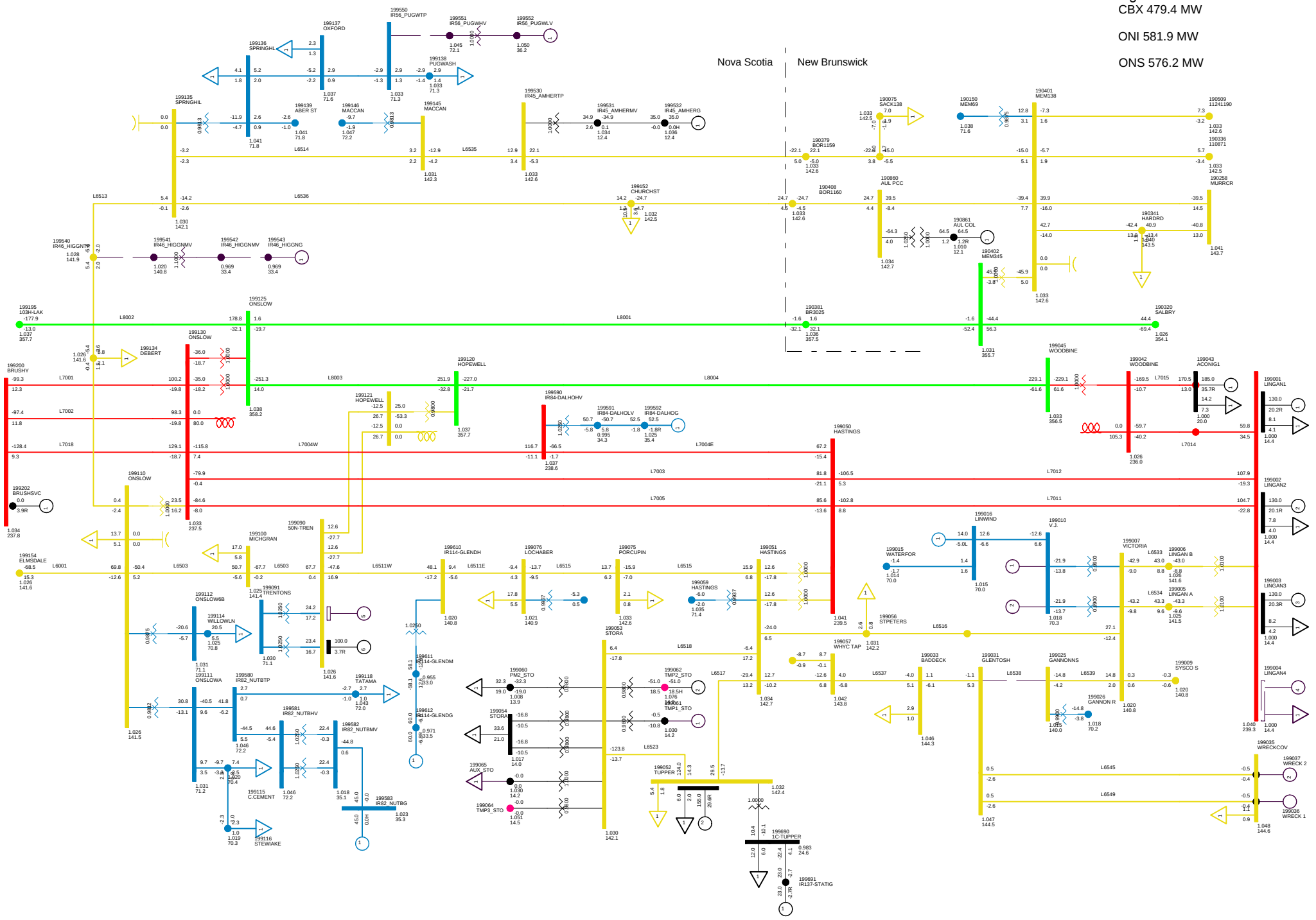

2013 LIGHT LOAD NS-NB=0
C22 LOSE L6538
NORTHEASTERN NS TUE, DEC 09 2008 21:44

Total Wind Gen: 290.1 MW
Gross Lingan 390.0 MW
Gross Pt Aconi 185.0 MW
Gross Tupper 155.0 MW
Gross Trenton 100.0 MW
Gross Tuft's Cove 0.0 MW
Gross Wreck Cove 0.0 MW
Gross Gas Turbine 0.0 MW
Gross Small Hydro 26.0 MW
Net Stora Load 117.4 MW
Total BMPC Load 42.5 MW

Bus - VOLTAGE (KV/PU)
Branch - MW/MVAR
Equipment - MW/MVAR
110.0%RATEA
1.050OV 0.950UV
KV: <=25.000 <=69.000 <=138.000 <=230.000 <=345.000 >345.000

Figure ___

Total Wind Gen: 290.1 MW | Gross Tupper 155.0 MW | Gross Wreck Cove 0.0 MW

Gross Lingan 390.0 MW | Gross Trenton 100.0 MW | Gross Gas Turbine 0.0 MW

Gross Pt Aconi 185.0 MW | Gross Tuft's Cove 0.0 MW | Gross Small Hydro 26.0 MW

Net Stora Load 117.4 MW | Total BMPC Load 42.5 MW

NSX -0.9 MW

CBX 479.7 MW

ONI 582.1 MW

ONS 576.2 MW

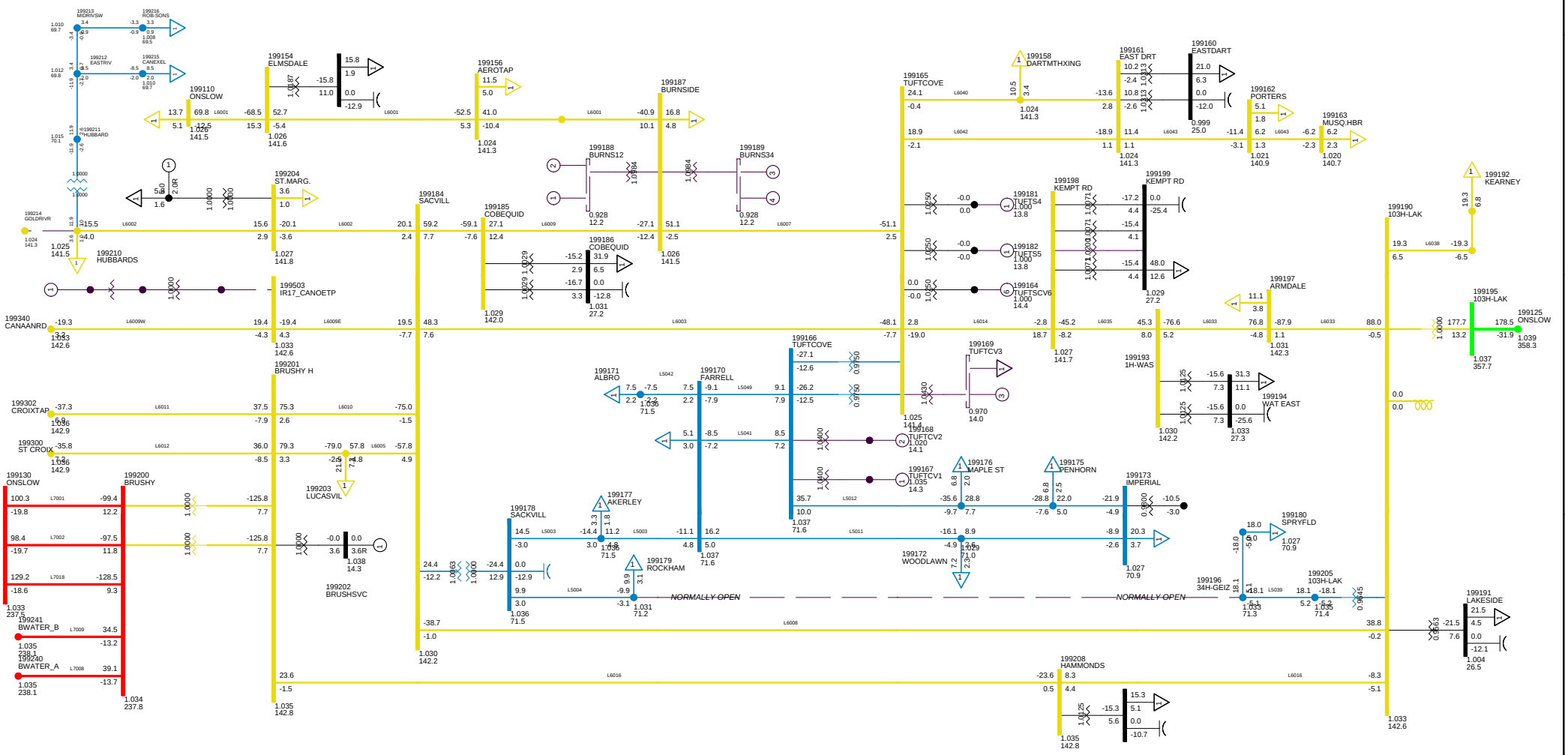

2010 LIGHT, NSLOAD=1150
NS-NB=0; NB-NE=0; CBX=469; ONI=482 ONS=475
METRO ZONE TUE, DEC 09 2008 21:44

Bus - VOLTAGE (KV/PU)
Branch - MW/MVAR
Equipment - MW/MVAR
100.0%RATEA
1.050OV 0.950UV
KV: <=30.000 <=69.000 <=138.000 <=230.000 <=345.000 >345.000

Figure __

Total Wind Gen: 290.1 MW | Gross Tupper 155.0 MW | Gross Wreck Cove 0.0 MW

Gross Lingan 390.0 MW | Gross Trenton 100.0 MW | Gross Gas Turbine 0.0 MW

Gross Pt Aconi 185.0 MW | Gross Tuft's Cove 0.0 MW | Gross Small Hydro 26.0 MW

Net Stora Load 117.4 MW | Total BMPC Load 42.5 MW

NSX -1.2 MW

CBX 479.7 MW

ONI 582.1 MW

ONS 576.5 MW

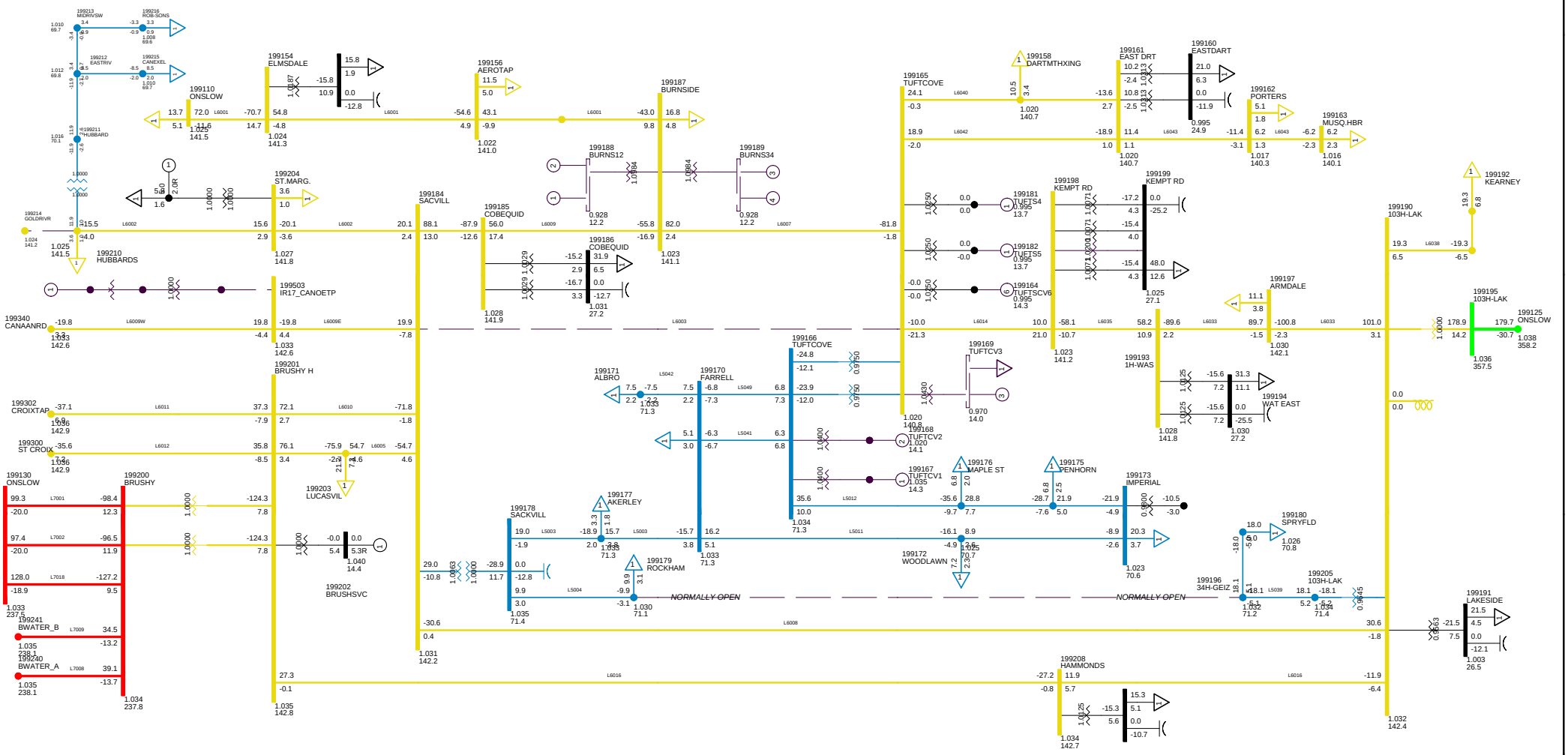

2013 LIGHT LOAD NS-NB=0
C23 LOSE L6003
METRO ZONE TUE, DEC 09 2008 21:44

Bus - VOLTAGE (KV/PU)
Branch - MW/MVAR
Equipment - MW/MVAR
100.0%RATEA
1.050OV 0.950UV
KV: <=30.000 <=69.000 <=138.000 <=230.000 <=345.000 >345.000

Figure __

Total Wind Gen: 290.1 MW
Gross Tupper 155.0 MW
Gross Wreck Cove 0.0 MW
Gross Lingan 390.0 MW
Gross Trenton 100.0 MW
Gross Gas Turbine 0.0 MW
Gross Pt Aconi 185.0 MW
Gross Tuft's Cove 0.0 MW
Gross Small Hydro 26.0 MW
Net Stora Load 117.4 MW
Total BMPC Load 42.5 MW

NSX 20.5 MW
CBX 479.7 MW
ONI 582.1 MW
ONS 554.9 MW

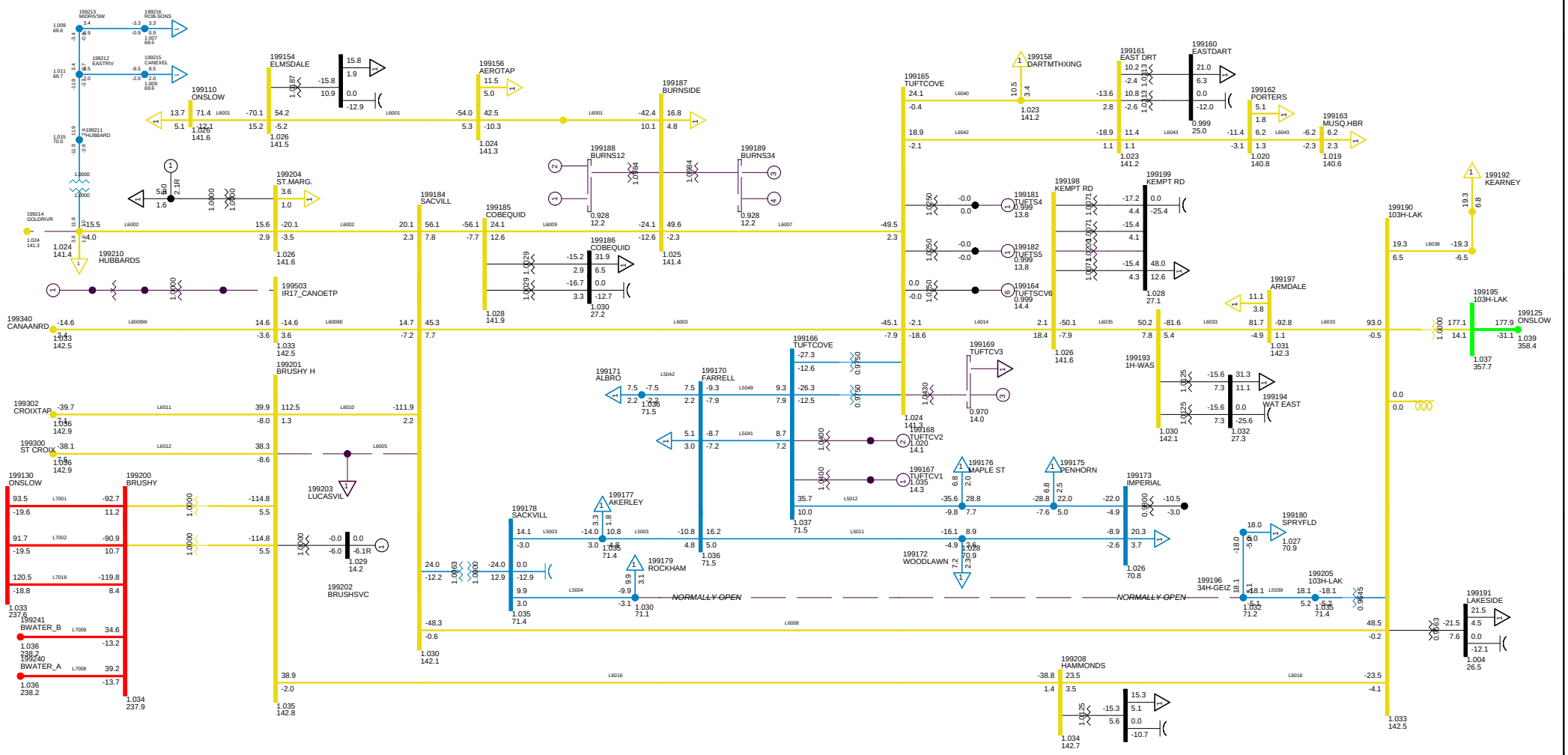

2013 LIGHT LOAD NS-NB=0
C24 LOSE L6005
METRO ZONE TUE, DEC 09 2008 21:45

Bus - VOLTAGE (KV/PU)
Branch - MW/MVAR
Equipment - MW/MVAR
100.0%RATEA
1.050OV 0.950UV
KV: <=30.000 <=69.000 <=138.000 <=230.000 <=345.000 >345.000

Figure __

Total Wind Gen: 290.1 MW
Gross Tupper 155.0 MW
Gross Wreck Cove 0.0 MW
Gross Lingan 390.0 MW
Gross Trenton 100.0 MW
Gross Gas Turbine 0.0 MW
Gross Pt Aconi 185.0 MW
Gross Tuft's Cove 0.0 MW
Gross Small Hydro 26.0 MW
Net Stora Load 117.4 MW
Total BMPC Load 42.5 MW

NSX -1.0 MW
CBX 479.7 MW
ONI 582.1 MW
ONS 576.4 MW

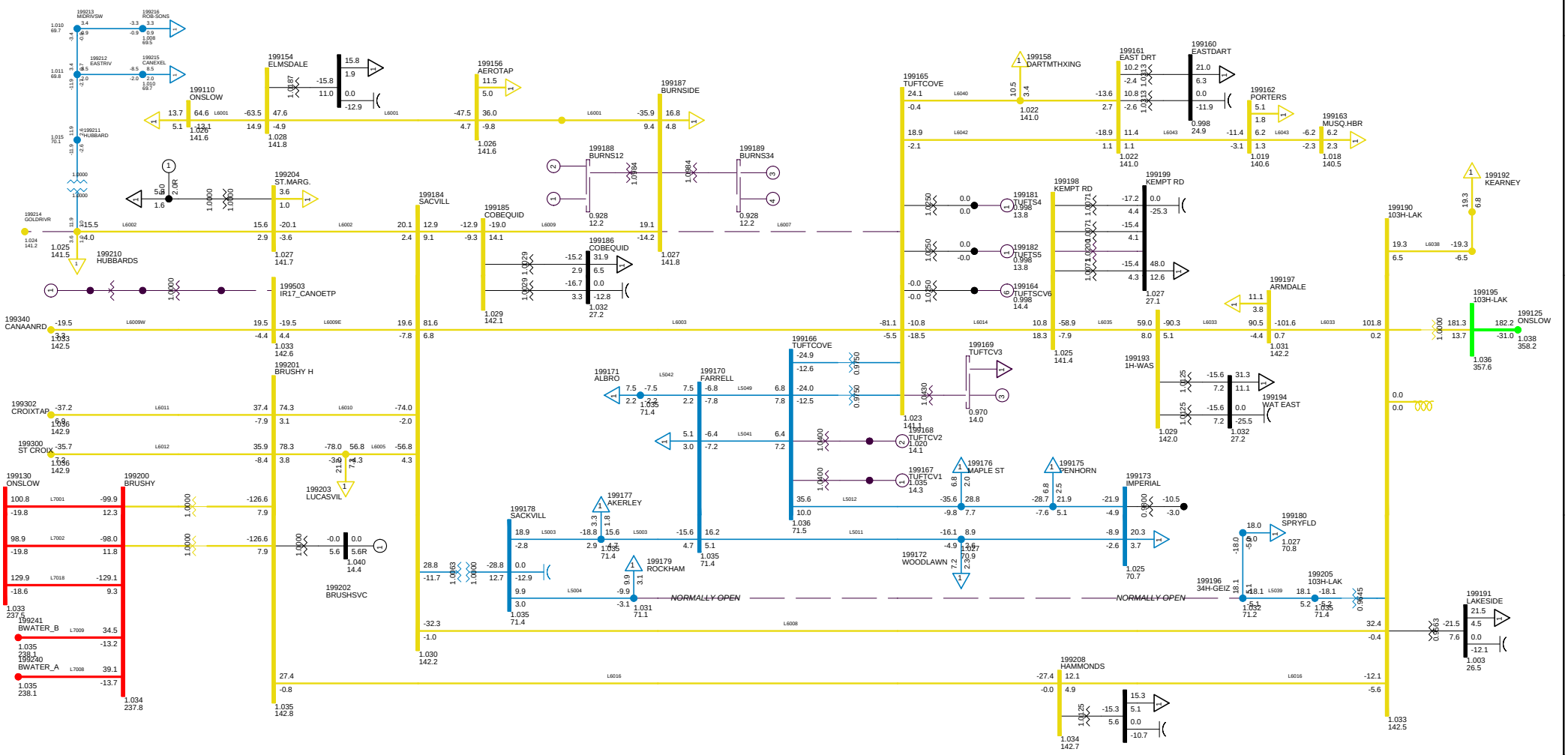

2013 LIGHT LOAD NS-NB=0
C25 LOSE L6007
METRO ZONE TUE, DEC 09 2008 21:45

Bus - VOLTAGE (KV/PU)
Branch - MW/MVAR
Equipment - MW/MVAR
100.0%RATEA
1.050OV 0.950UV
KV: <=30.000 <=69.000 <=138.000 <=230.000 <=345.000 >345.000

Figure __

Total Wind Gen: 290.1 MW | Gross Tupper 155.0 MW | Gross Wreck Cove 0.0 MW

Gross Lingan 390.0 MW | Gross Trenton 100.0 MW | Gross Gas Turbine 0.0 MW

Gross Pt Aconi 185.0 MW | Gross Tuft's Cove 0.0 MW | Gross Small Hydro 26.0 MW

Net Stora Load 117.4 MW | Total BMPC Load 42.5 MW

NSX -1.2 MW

CBX 479.6 MW

ONI 582.1 MW

ONS 576.5 MW

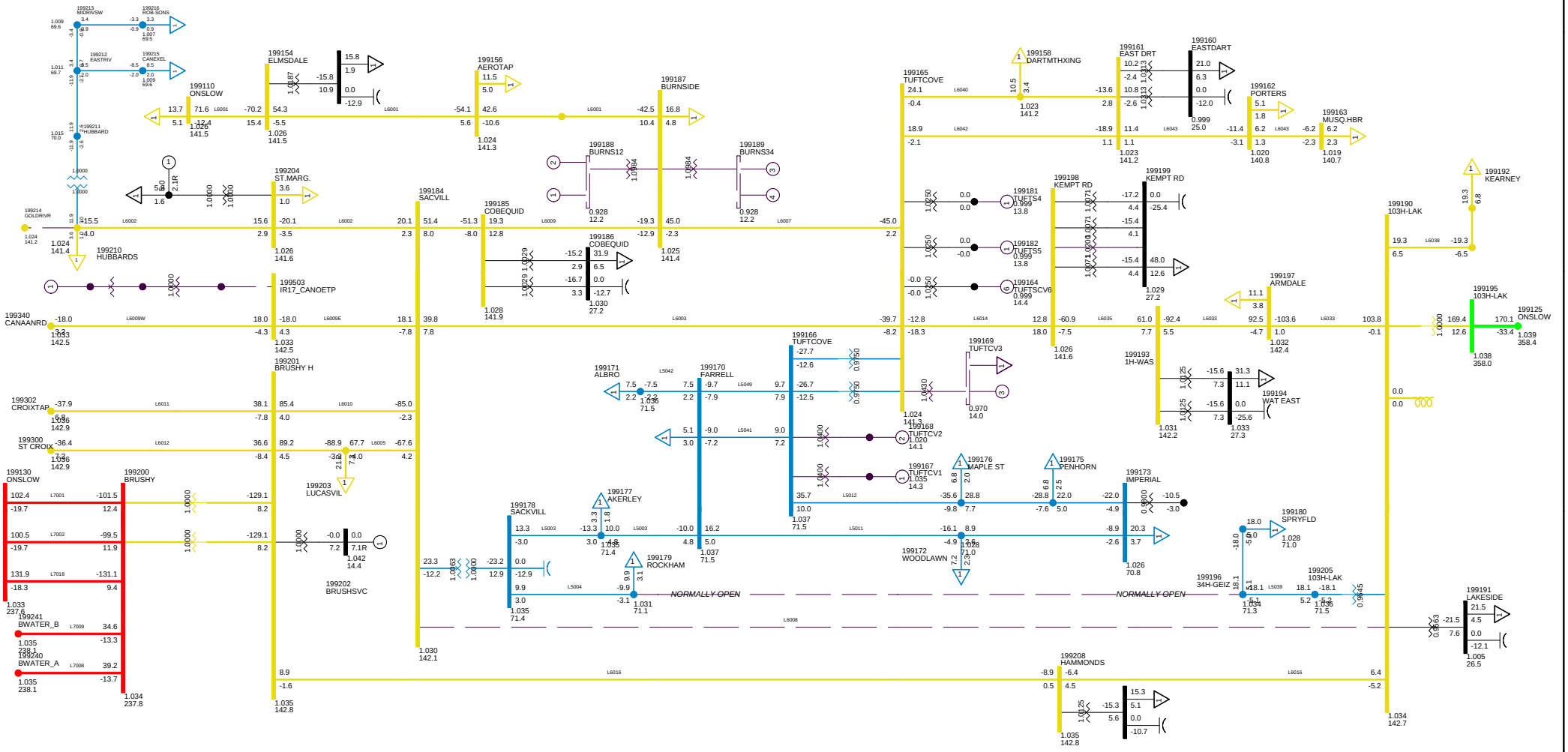

2013 LIGHT LOAD NS-NB=0
C26 LOSE L6008
METRO ZONE TUE, DEC 09 2008 21:45

Bus - VOLTAGE (KV/PU)
Branch - MW/MVAR
Equipment - MW/MVAR
100.0%RATEA
1.050OV 0.950UV
KV: <=30.000 <=69.000 <=138.000 <=230.000 <=345.000 >345.000

Figure __

Total Wind Gen: 290.1 MW | Gross Tupper 155.0 MW | Gross Wreck Cove 0.0 MW

Gross Lingan 390.0 MW | Gross Trenton 100.0 MW | Gross Gas Turbine 0.0 MW

Gross Pt Aconi 185.0 MW | Gross Tuft's Cove 0.0 MW | Gross Small Hydro 26.0 MW

Net Stora Load 117.4 MW | Total BMPC Load 42.5 MW

NSX 14.7 MW

CBX 479.7 MW

ONI 582.1 MW

ONS 560.7 MW

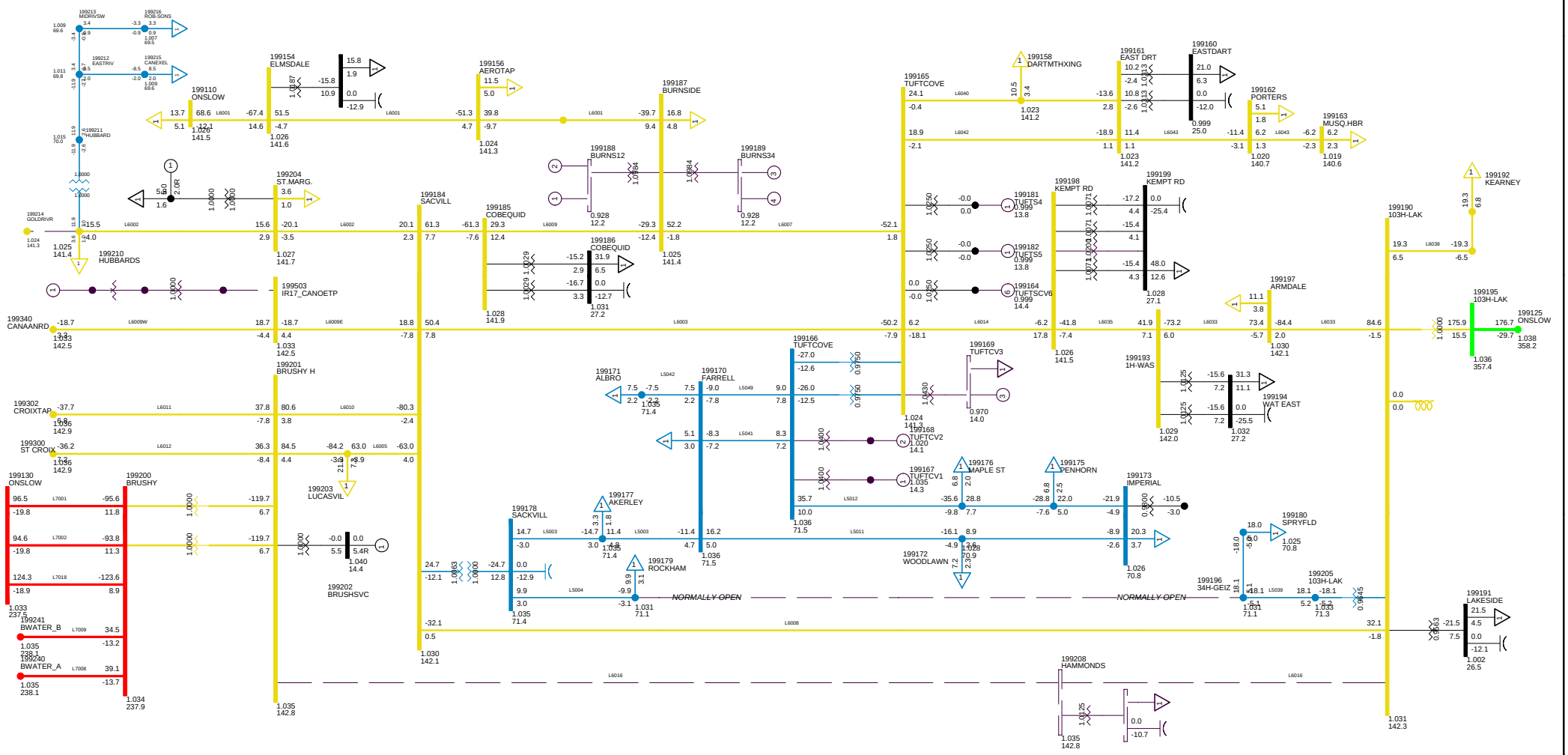

2013 LIGHT LOAD NS-NB=0
C27 LOSE L6009
METRO ZONE TUE, DEC 09 2008 21:45

Bus - VOLTAGE (KV/PU)
Branch - MW/MVAR
Equipment - MW/MVAR
100.0%RATEA
1.050OV 0.950UV
KV: <=30.000 <=69.000 <=138.000 <=230.000 <=345.000 >345.000

Figure __

Total Wind Gen: 290.1 MW | Gross Tupper 155.0 MW | Gross Wreck Cove 0.0 MW

Gross Lingan 390.0 MW | Gross Trenton 100.0 MW | Gross Gas Turbine 0.0 MW

Gross Pt Aconi 185.0 MW | Gross Tuft's Cove 0.0 MW | Gross Small Hydro 26.0 MW

Net Stora Load 117.4 MW | Total BMPC Load 42.5 MW

NSX -1.4 MW

CBX 479.7 MW

ONI 582.1 MW

ONS 576.7 MW

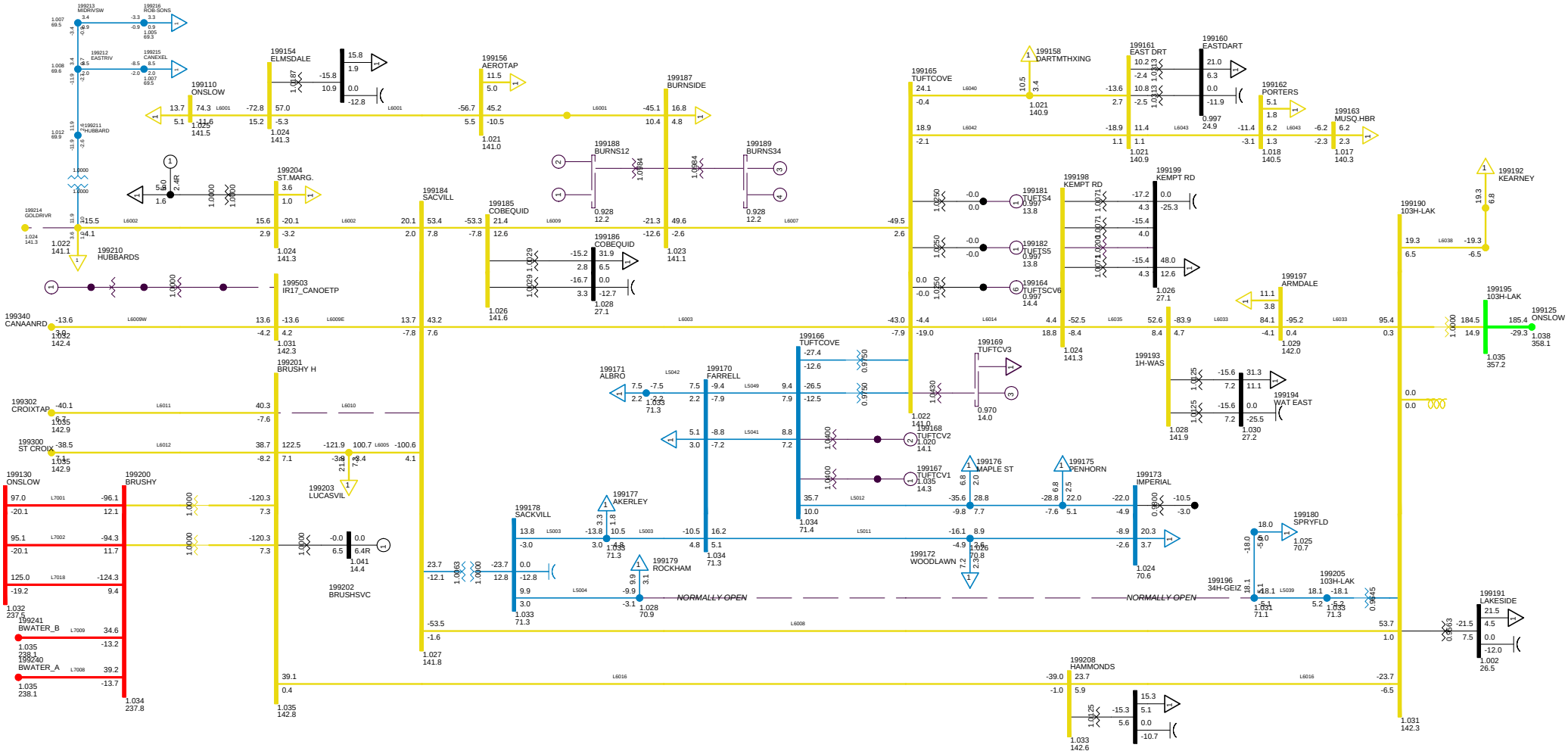

2013 LIGHT LOAD NS-NB=0
C28 LOSE L6010
METRO ZONE TUE, DEC 09 2008 21:45

Bus - VOLTAGE (KV/PU)
Branch - MW/MVAR
Equipment - MW/MVAR
100.0%RATEA
1.050OV 0.950UV
KV: <=30.000 <=69.000 <=138.000 <=230.000 <=345.000 >345.000

Figure __

Total Wind Gen: 290.1 MW | Gross Tupper 155.0 MW | Gross Wreck Cove 0.0 MW

Gross Lingan 390.0 MW | Gross Trenton 100.0 MW | Gross Gas Turbine 0.0 MW

Gross Pt Aconi 185.0 MW | Gross Tuft's Cove 0.0 MW | Gross Small Hydro 26.0 MW

Net Stora Load 117.4 MW | Total BMPC Load 42.5 MW

NSX -0.9 MW

CBX 479.7 MW

ONI 582.1 MW

ONS 576.2 MW

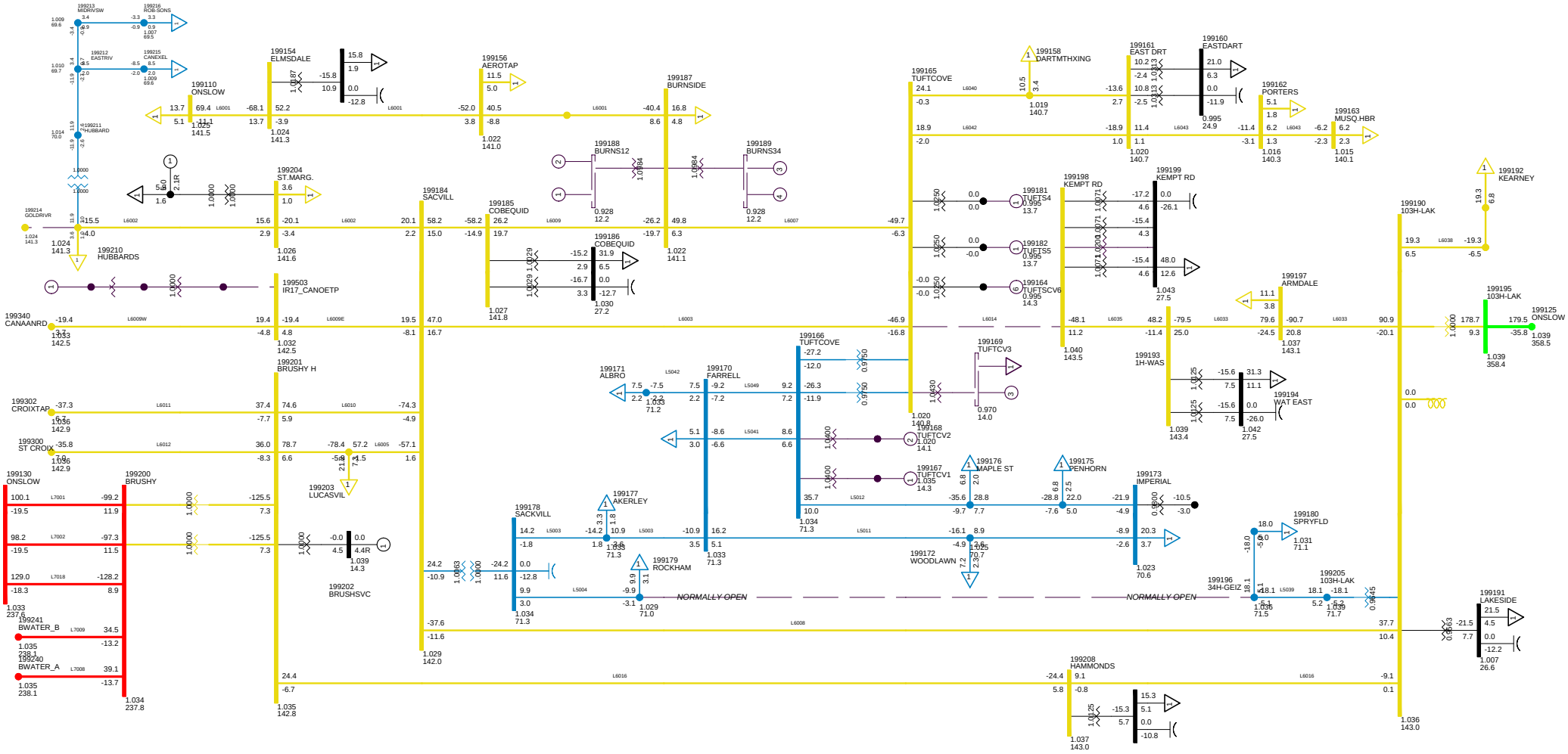

2013 LIGHT LOAD NS-NB=0
C29 LOSE L6014
METRO ZONE TUE, DEC 09 2008 21:45

Bus - VOLTAGE (KV/PU)
Branch - MW/MVAR
Equipment - MW/MVAR
100.0%RATEA
1.050OV 0.950UV
KV: <=30.000 <=69.000 <=138.000 <=230.000 <=345.000 >345.000

Figure __

Total Wind Gen: 290.1 MW
Gross Tupper 155.0 MW
Gross Wreck Cove 0.0 MW
Gross Lingan 390.0 MW
Gross Trenton 100.0 MW
Gross Gas Turbine 0.0 MW
Gross Pt Aconi 185.0 MW
Gross Tuft's Cove 0.0 MW
Gross Small Hydro 26.0 MW
Net Stora Load 117.4 MW
Total BMPC Load 42.5 MW

NSX 14.7 MW
CBX 479.7 MW
ONI 582.1 MW
ONS 560.7 MW

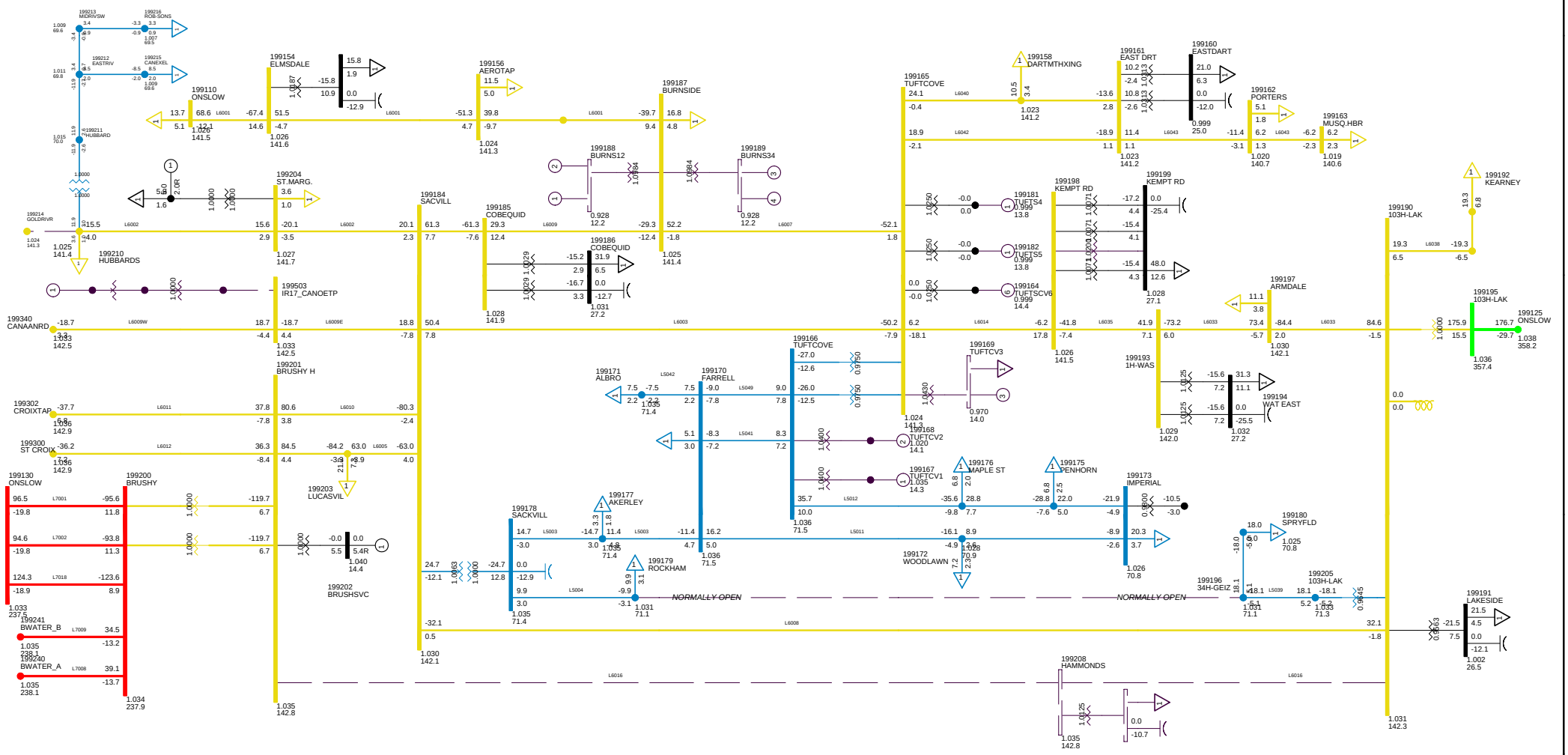

2013 LIGHT LOAD NS-NB=0
C30 LOSE L6016
METRO ZONE TUE, DEC 09 2008 21:45

Bus - VOLTAGE (KV/PU)
Branch - MW/MVAR
Equipment - MW/MVAR
100.0%RATEA
1.050OV 0.950UV
KV: <=30.000 <=69.000 <=138.000 <=230.000 <=345.000 >345.000

Figure __

Total Wind Gen: 290.1 MW
Gross Tupper 155.0 MW
Gross Wreck Cove 0.0 MW
Gross Lingan 390.0 MW
Gross Trenton 100.0 MW
Gross Gas Turbine 0.0 MW
Gross Pt Aconi 185.0 MW
Gross Tuft's Cove 0.0 MW
Gross Small Hydro 26.0 MW
Net Stora Load 117.4 MW
Total BMPC Load 42.5 MW

NSX 24.6 MW
CBX 479.7 MW
ONI 582.1 MW
ONS 550.7 MW

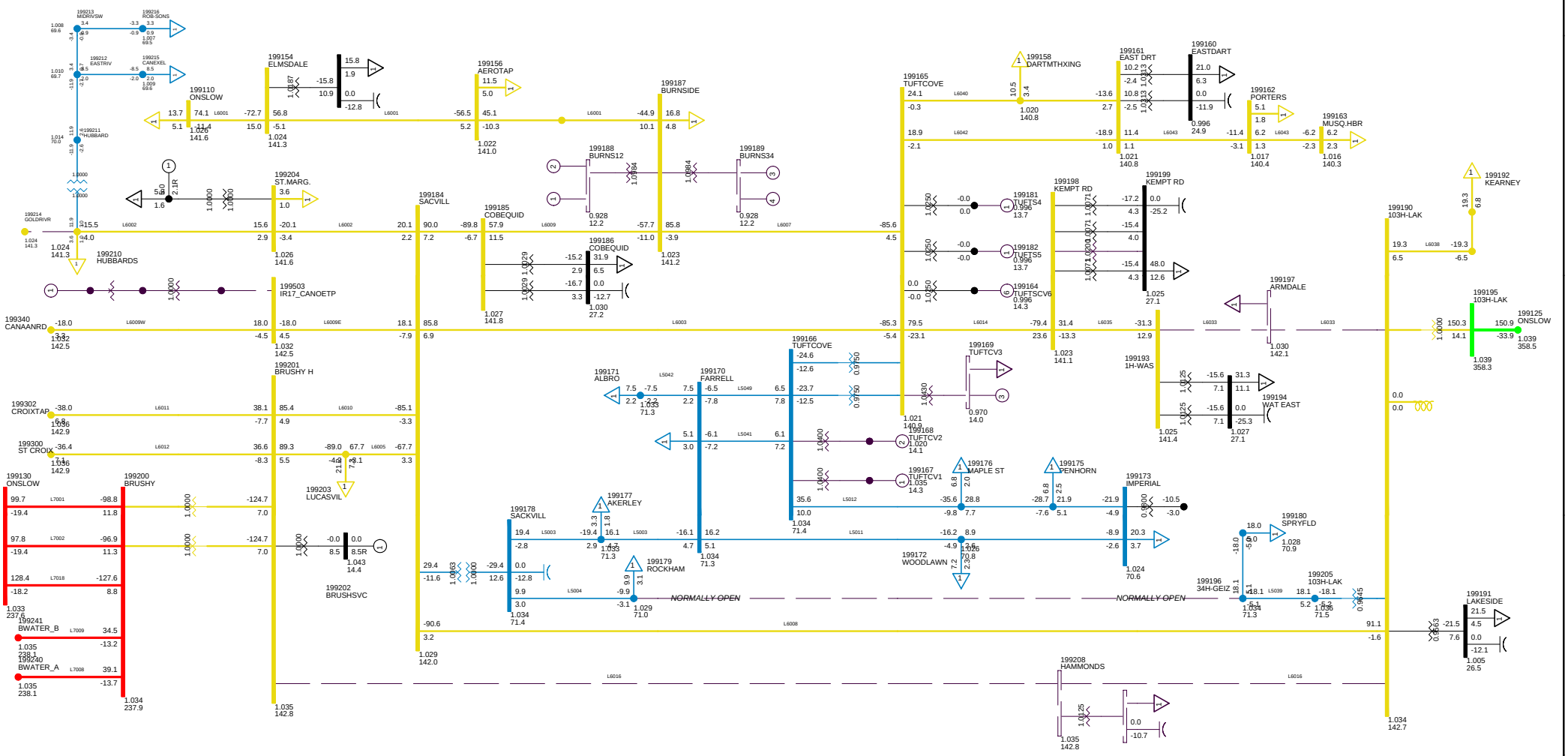

2013 LIGHT LOAD NS-NB=0
C31 LOSE L6033
METRO ZONE TUE, DEC 09 2008 21:45

Bus - VOLTAGE (KV/PU)
Branch - MW/MVAR
Equipment - MW/MVAR
100.0%RATEA
1.050OV 0.950UV
KV: <=30.000 <=69.000 <=138.000 <=230.000 <=345.000 >345.000

Figure __

Total Wind Gen: 290.1 MW
Gross Tupper 155.0 MW
Gross Wreck Cove 0.0 MW
Gross Lingan 390.0 MW
Gross Trenton 100.0 MW
Gross Gas Turbine 0.0 MW
Gross Pt Aconi 185.0 MW
Gross Tuft's Cove 0.0 MW
Gross Small Hydro 26.0 MW
Net Stora Load 117.4 MW
Total BMPC Load 42.5 MW

NSX -1.5 MW
CBX 479.6 MW
ONI 582.1 MW
ONS 576.8 MW

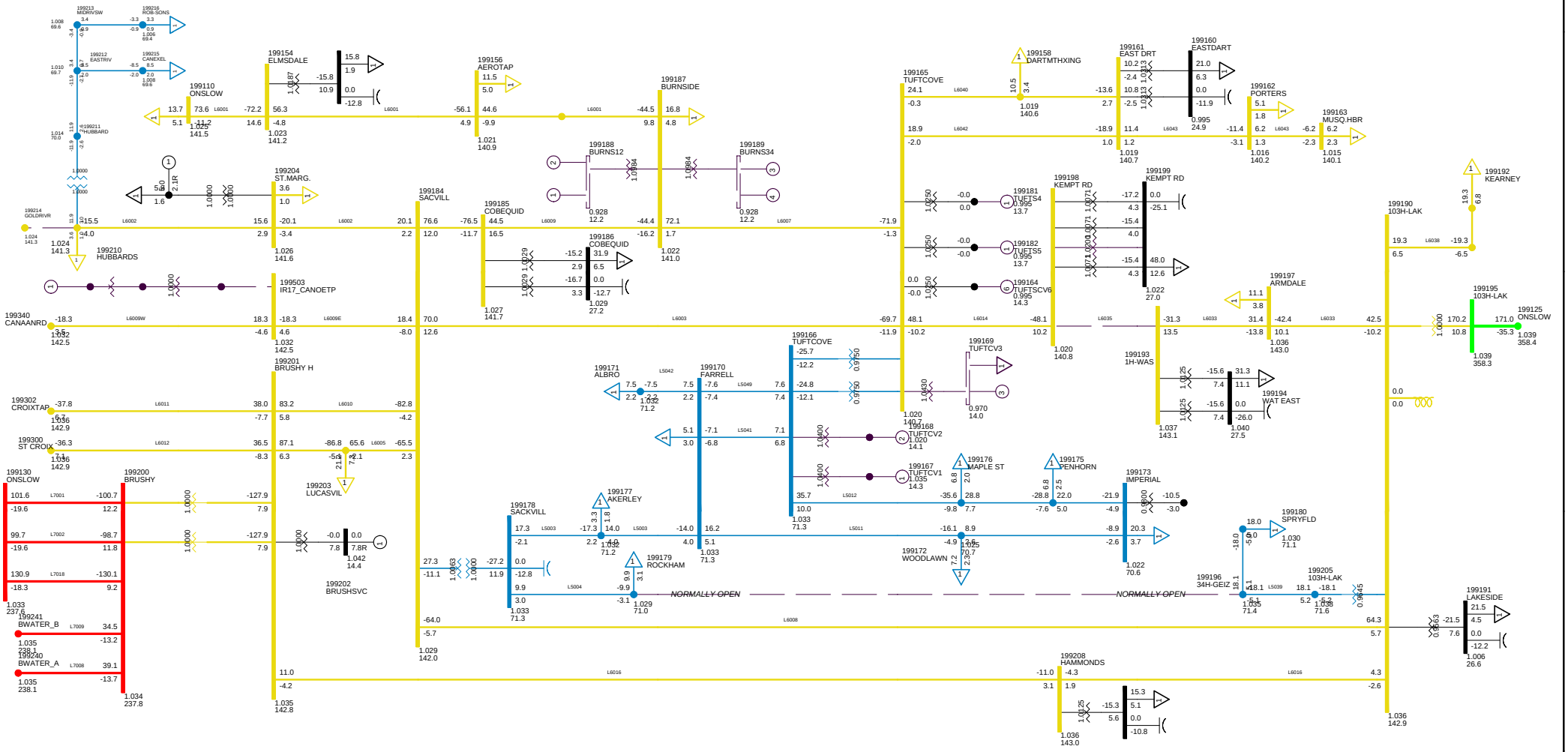

2013 LIGHT LOAD NS-NB=0
C32 LOSE L6035
METRO ZONE TUE, DEC 09 2008 21:46

Bus - VOLTAGE (KV/PU)
Branch - MW/MVAR
Equipment - MW/MVAR
100.0%RATEA
1.050OV 0.950UV
KV: <=30.000 <=69.000 <=138.000 <=230.000 <=345.000 >345.000

Figure __

Total Wind Gen: 290.1 MW
Gross Tupper 155.0 MW
Gross Wreck Cove 0.0 MW
Gross Lingan 390.0 MW
Gross Trenton 100.0 MW
Gross Gas Turbine 0.0 MW
Gross Pt Aconi 185.0 MW
Gross Tuft's Cove 0.0 MW
Gross Small Hydro 26.0 MW
Net Stora Load 117.4 MW
Total BMPC Load 42.5 MW

NSX 11.5 MW
CBX 479.5 MW
ONI 581.7 MW
ONS 563.3 MW

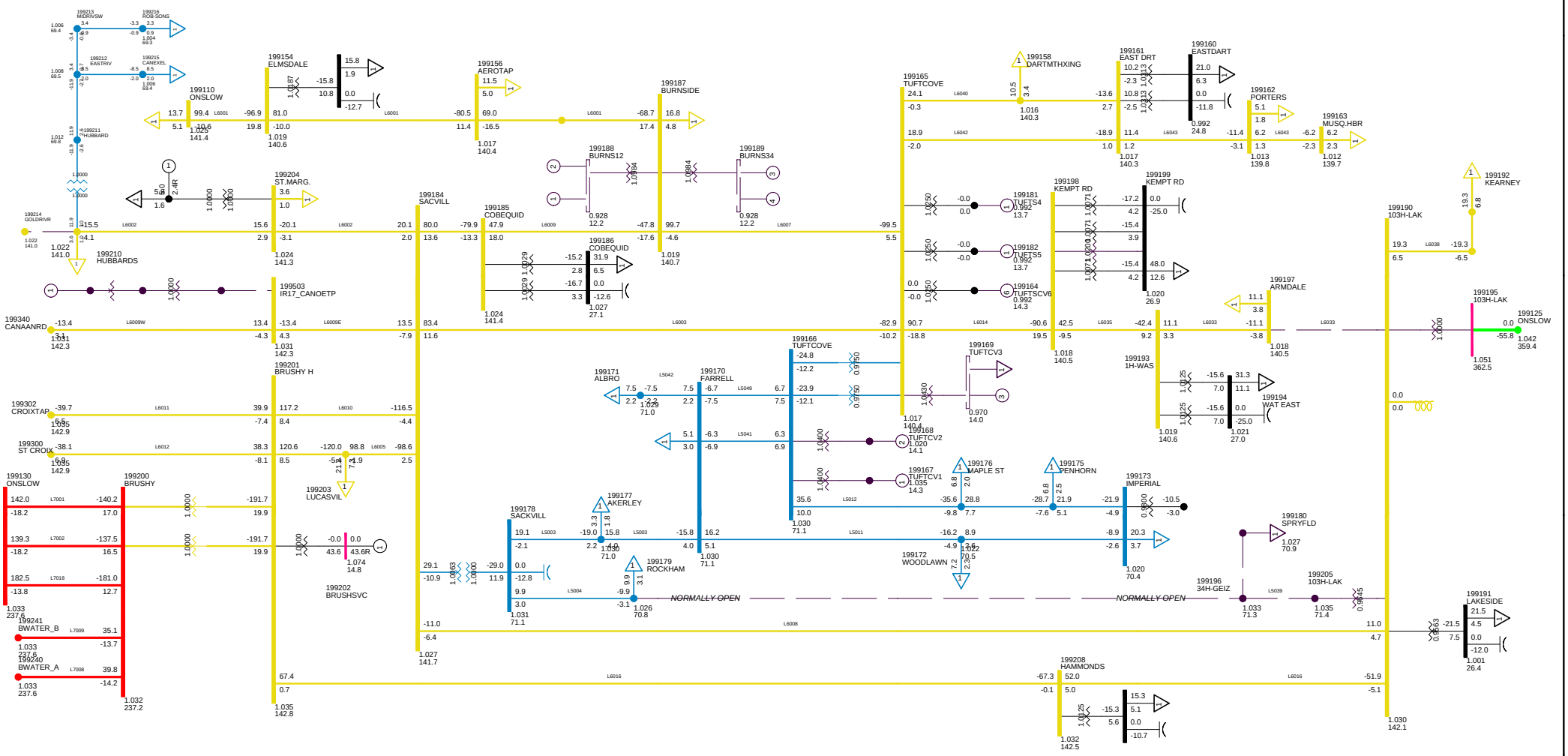

2013 LIGHT LOAD NS-NB=0
C33 LOSE 103H-B61
METRO ZONE TUE, DEC 09 2008 21:46

Bus - VOLTAGE (KV/PU)
Branch - MW/MVAR
Equipment - MW/MVAR
100.0%RATEA
1.050OV 0.950UV
KV: <=30.000 <=69.000 <=138.000 <=230.000 <=345.000 >345.000

Figure __

Total Wind Gen: 290.1 MW
Gross Tupper 155.0 MW
Gross Wreck Cove 0.0 MW
Gross Lingan 390.0 MW
Gross Trenton 100.0 MW
Gross Gas Turbine 0.0 MW
Gross Pt Aconi 185.0 MW
Gross Tuft's Cove 0.0 MW
Gross Small Hydro 26.0 MW
Net Stora Load 117.4 MW
Total BMPC Load 42.5 MW

NSX 14.1 MW
CBX 479.5 MW
ONI 581.8 MW
ONS 560.8 MW

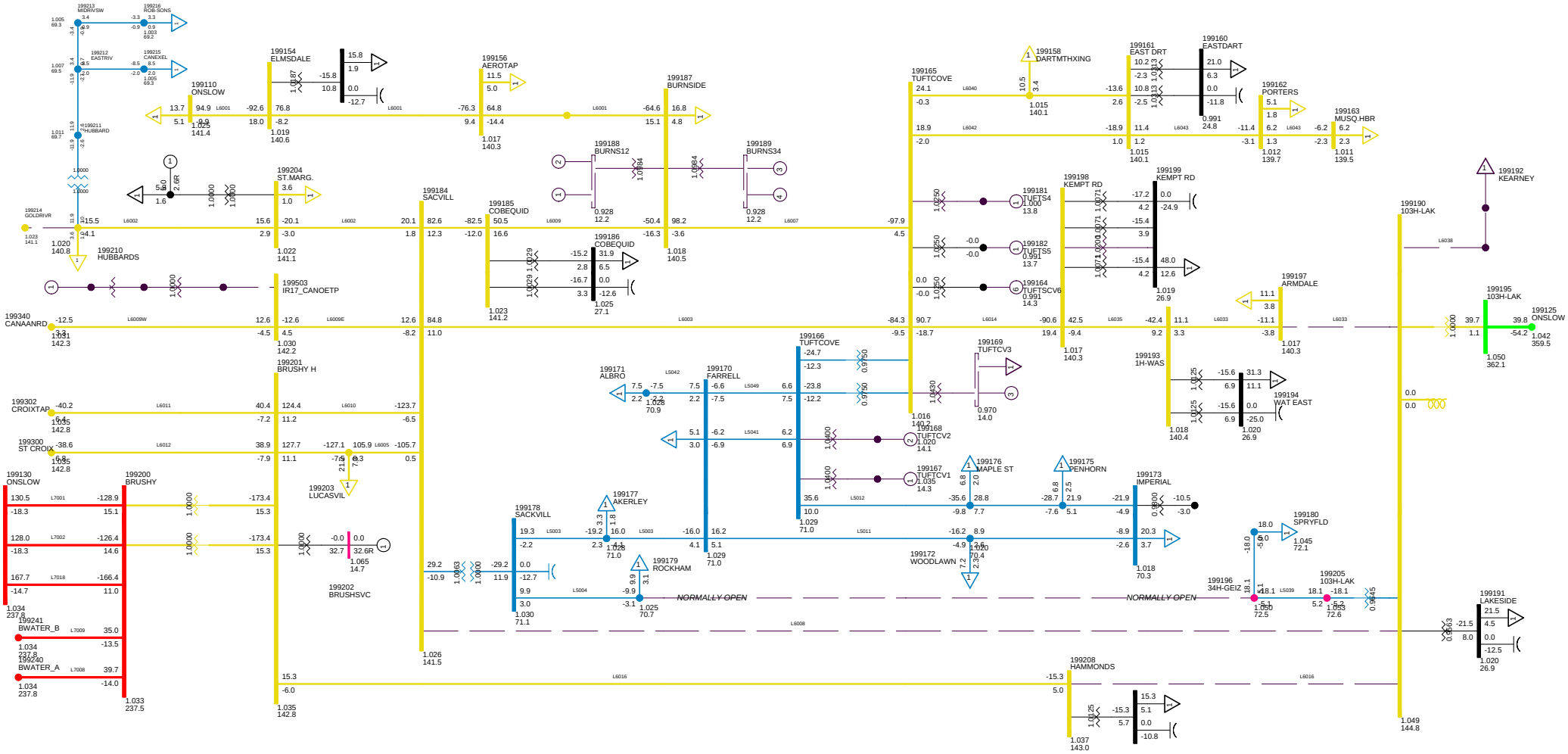

2013 LIGHT LOAD NS-NB=0
C34 LOSE 103H-B62
METRO ZONE TUE, DEC 09 2008 21:46

Bus - VOLTAGE (KV/PU)
Branch - MW/MVAR
Equipment - MW/MVAR
100.0%RATEA
1.050OV 0.950UV
KV: <=30.000 <=69.000 <=138.000 <=230.000 <=345.000 >345.000

Figure __

Total Wind Gen: 290.1 MW | Gross Tupper 155.0 MW | Gross Wreck Cove 0.0 MW

Gross Lingan 390.0 MW | Gross Trenton 100.0 MW | Gross Gas Turbine 0.0 MW

Gross Pt Aconi 185.0 MW | Gross Tuft's Cove 0.0 MW | Gross Small Hydro 26.0 MW

Net Stora Load 117.4 MW | Total BMPC Load 42.5 MW

NSX -0.9 MW

CBX 479.7 MW

ONI 582.1 MW

ONS 576.2 MW

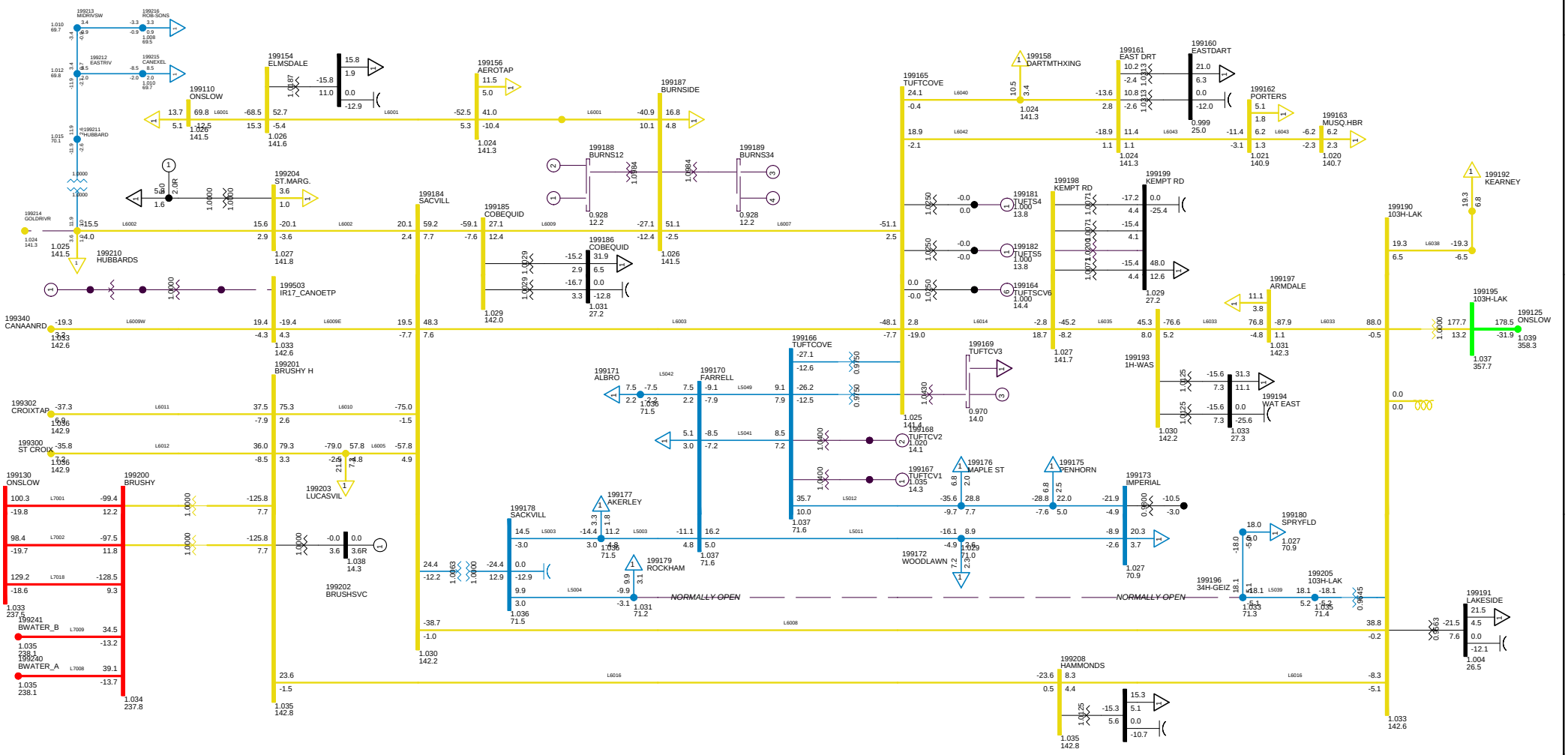

2010 LIGHT, NSLOAD=1150
NS-NB=0; NB-NE=0; CBX=469; ONI=482 ONS=475
METRO ZONE TUE, DEC 09 2008 21:46

Bus - VOLTAGE (KV/PU)
Branch - MW/MVAR
Equipment - MW/MVAR
100.0%RATEA
1.050OV 0.950UV
KV: <=30.000 <=69.000 <=138.000 <=230.000 <=345.000 >345.000

Figure __

Total Wind Gen: 290.1 MW
Gross Tupper 155.0 MW
Gross Wreck Cove 0.0 MW
Gross Lingan 390.0 MW
Gross Trenton 100.0 MW
Gross Gas Turbine 0.0 MW
Gross Pt Aconi 185.0 MW
Gross Tuft's Cove 0.0 MW
Gross Small Hydro 26.0 MW
Net Stora Load 117.4 MW
Total BMPC Load 42.5 MW

NSX 18.9 MW
CBX 479.7 MW
ONI 582.2 MW
ONS 556.5 MW

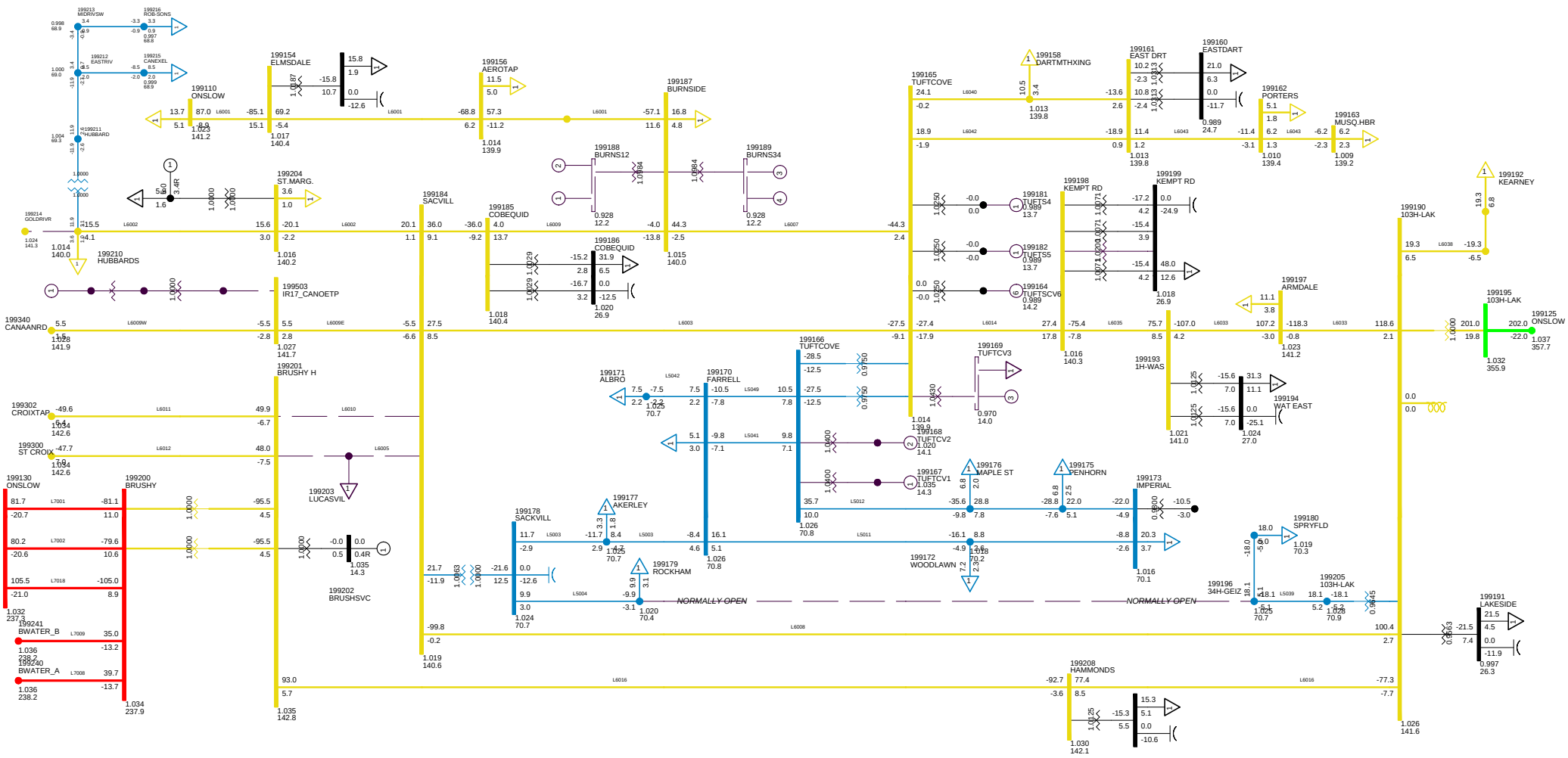

2013 LIGHT LOAD NS-NB=0
C35 DCT L6005+L6010
METRO ZONE TUE, DEC 09 2008 21:46

Bus - VOLTAGE (KV/PU)
Branch - MW/MVAR
Equipment - MW/MVAR
100.0%RATEA
1.050OV 0.950UV
KV: <=30.000 <=69.000 <=138.000 <=230.000 <=345.000 >345.000

Figure __

Total Wind Gen: 290.1 MW
Gross Tupper 155.0 MW
Gross Wreck Cove 0.0 MW
Gross Lingan 390.0 MW
Gross Trenton 100.0 MW
Gross Gas Turbine 0.0 MW
Gross Pt Aconi 185.0 MW
Gross Tuft's Cove 0.0 MW
Gross Small Hydro 26.0 MW
Net Stora Load 117.4 MW
Total BMPC Load 42.5 MW

NSX 20.5 MW
CBX 479.7 MW
ONI 582.1 MW
ONS 554.9 MW

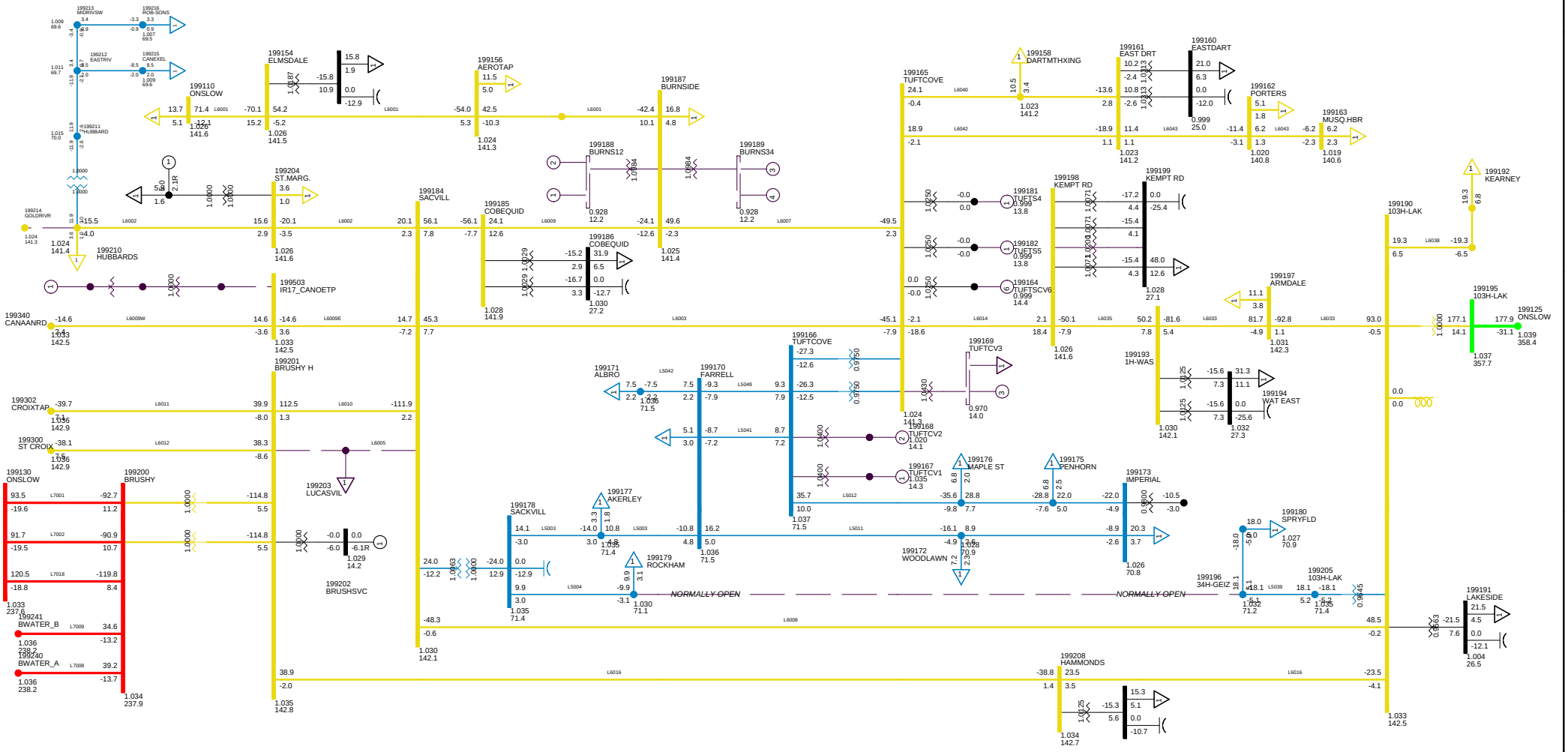

2010 LIGHT, NSLOAD=1150
NS-NB=0; NB-NE=0; CBX=469; ONI=482 ONS=475
METRO ZONE TUE, DEC 09 2008 21:46

Bus - VOLTAGE (KV/PU)
Branch - MW/MVAR
Equipment - MW/MVAR
100.0%RATEA
1.050OV 0.950UV
KV: <=30.000 <=69.000 <=138.000 <=230.000 <=345.000 >345.000

Figure __

Total Wind Gen: 290.1 MW | Gross Tupper 155.0 MW | Gross Wreck Cove 0.0 MW

Gross Lingan 390.0 MW | Gross Trenton 100.0 MW | Gross Gas Turbine 0.0 MW

Gross Pt Aconi 185.0 MW | Gross Tuft's Cove 0.0 MW | Gross Small Hydro 26.0 MW

Net Stora Load 117.4 MW | Total BMPC Load 42.5 MW

NSX 35.9 MW

CBX 479.7 MW

ONI 582.2 MW

ONS 539.5 MW

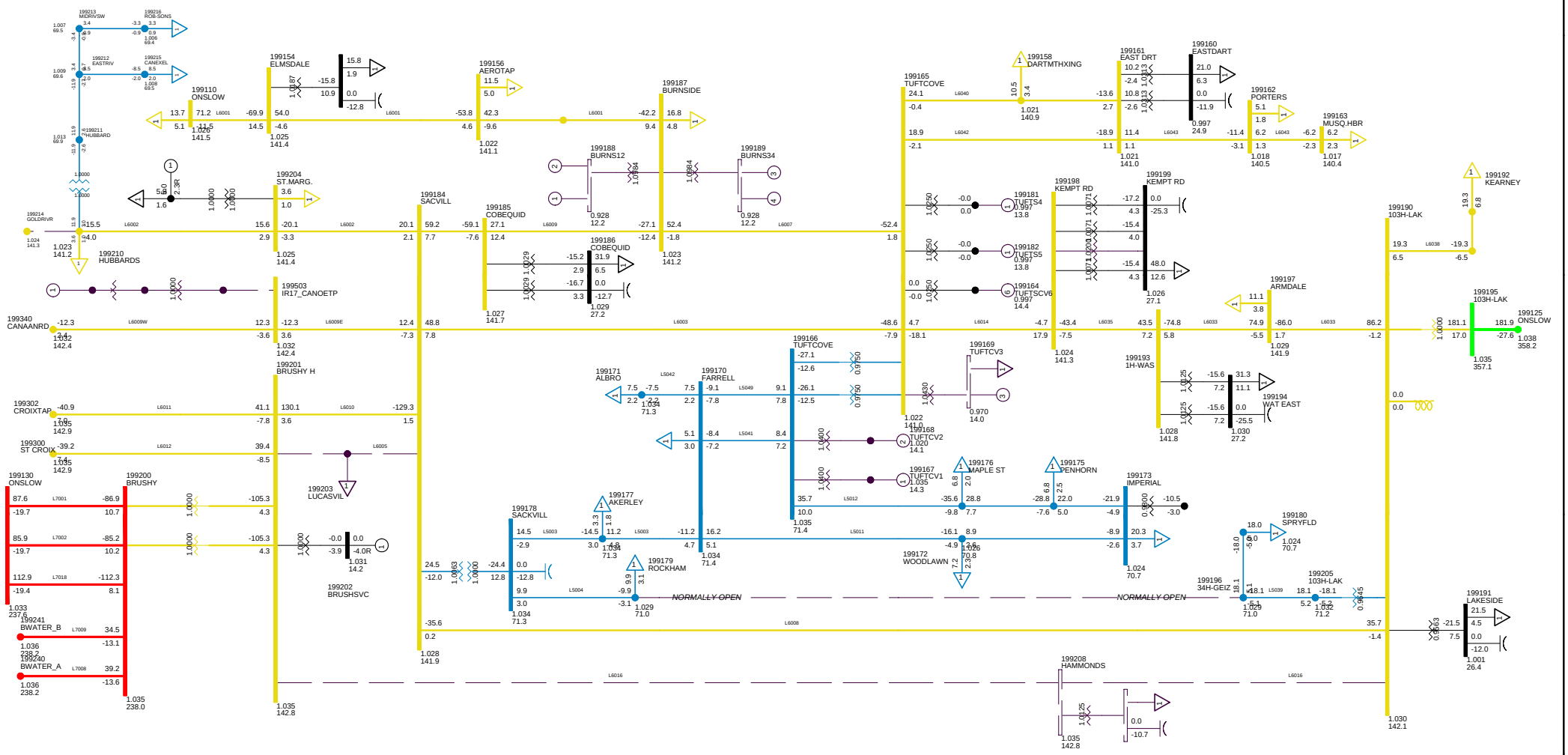

2013 LIGHT LOAD NS-NB=0
C37 DCT L6005 L6016
METRO ZONE TUE, DEC 09 2008 21:46

Bus - VOLTAGE (KV/PU)
Branch - MW/MVAR
Equipment - MW/MVAR
100.0%RATEA
1.050OV 0.950UV
KV: <=30.000 <=69.000 <=138.000 <=230.000 <=345.000 >345.000

Figure __

Total Wind Gen: 290.1 MW | Gross Tupper 155.0 MW | Gross Wreck Cove 0.0 MW

Gross Lingan 390.0 MW | Gross Trenton 100.0 MW | Gross Gas Turbine 0.0 MW

Gross Pt Aconi 185.0 MW | Gross Tuft's Cove 0.0 MW | Gross Small Hydro 26.0 MW

Net Stora Load 117.4 MW | Total BMPC Load 42.5 MW

NSX 30.9 MW

CBX 479.7 MW

ONI 582.1 MW

ONS 544.5 MW

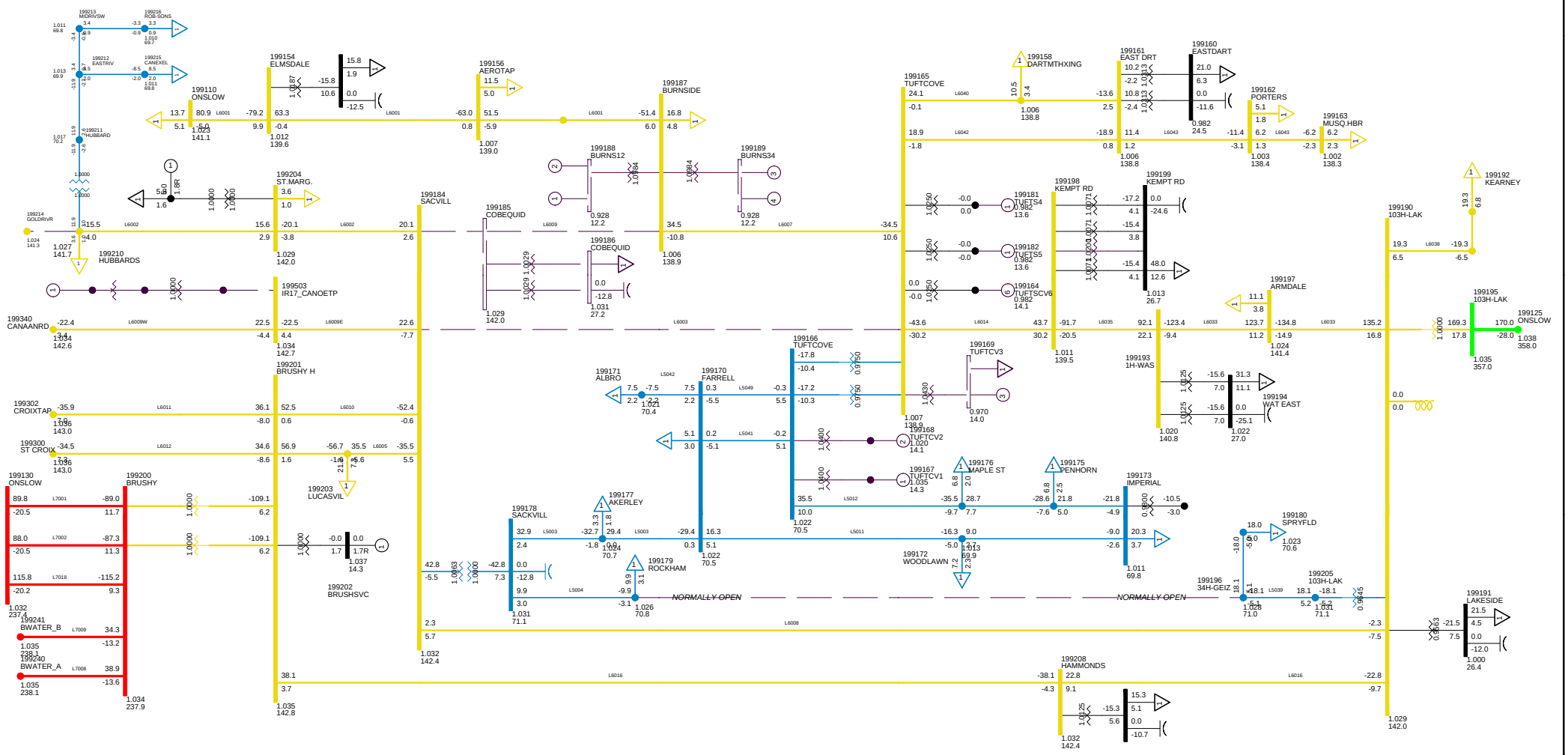

2013 LIGHT LOAD NS-NB=0
C38 DCT L6003 L6009
METRO ZONE TUE, DEC 09 2008 21:46

Bus - VOLTAGE (KV/PU)
Branch - MW/MVAR
Equipment - MW/MVAR
100.0%RATEA
1.050OV 0.950UV
KV: <=30.000 <=69.000 <=138.000 <=230.000 <=345.000 >345.000

Figure __

Total Wind Gen: 290.1 MW | Gross Tupper 155.0 MW | Gross Wreck Cove 0.0 MW

Gross Lingan 390.0 MW | Gross Trenton 100.0 MW | Gross Gas Turbine 0.0 MW

Gross Pt Aconi 185.0 MW | Gross Tuft's Cove 0.0 MW | Gross Small Hydro 26.0 MW

Net Stora Load 117.4 MW | Total BMPC Load 42.5 MW

NSX -1.2 MW

CBX 479.7 MW

ONI 582.1 MW

ONS 576.5 MW

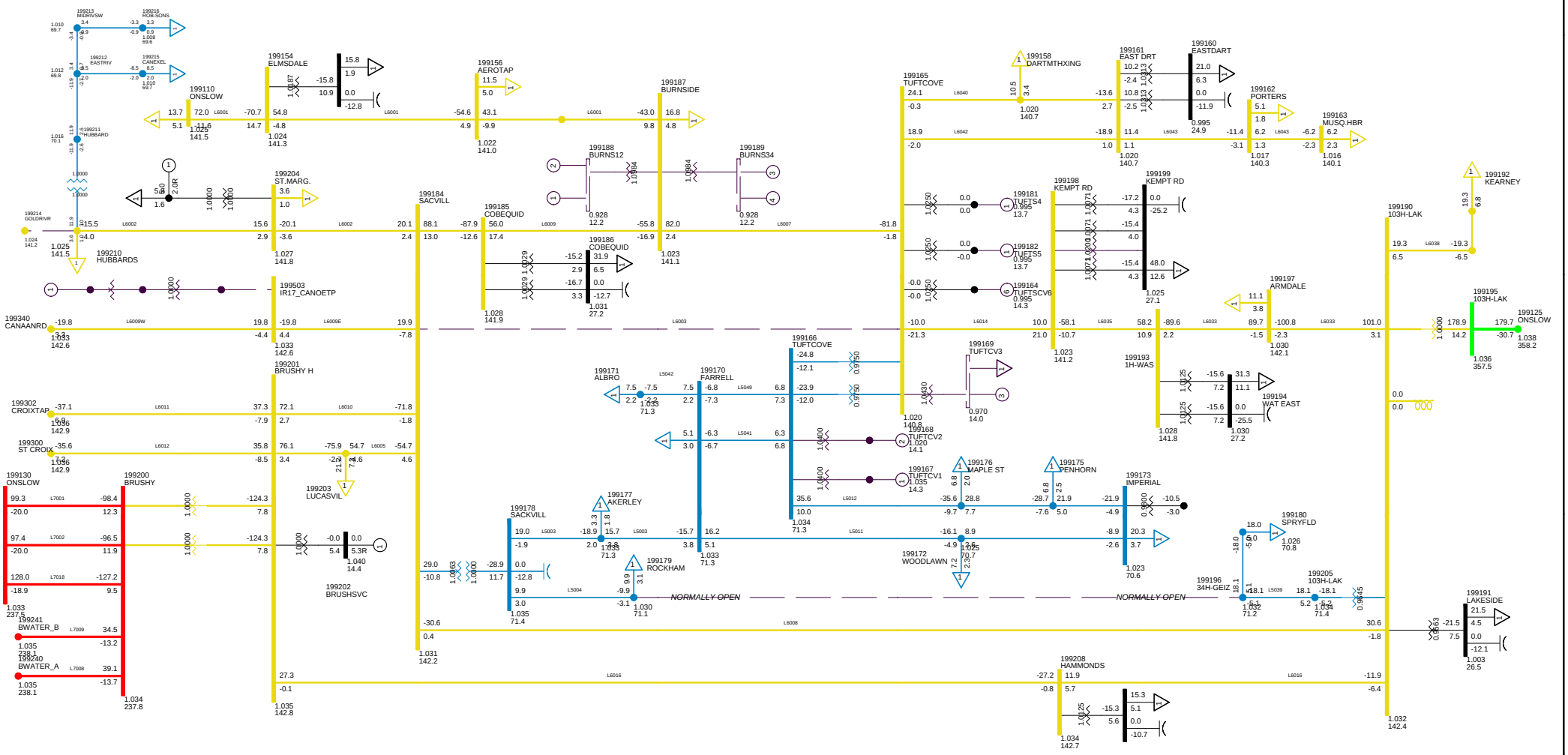

2013 LIGHT LOAD NS-NB=0
C39 DCT L6003 L6007
METRO ZONE TUE, DEC 09 2008 21:47

Bus - VOLTAGE (KV/PU)
Branch - MW/MVAR
Equipment - MW/MVAR
100.0%RATEA
1.050OV 0.950UV
KV: <=30.000 <=69.000 <=138.000 <=230.000 <=345.000 >345.000

Figure __

Total Wind Gen: 259.5 MW | Gross Tupper 155.0 MW | Gross Wreck Cove 0.0 MW

Gross Lingan 390.0 MW | Gross Trenton 100.0 MW | Gross Gas Turbine 0.0 MW

Gross Pt Aconi 185.0 MW | Gross Tuft's Cove 0.0 MW | Gross Small Hydro 7.0 MW

Net Stora Load 117.4 MW | Total BMPC Load 0.0 MW

NSX 70.4 MW

CBX 479.7 MW

ONI 582.2 MW

ONS 505.0 MW

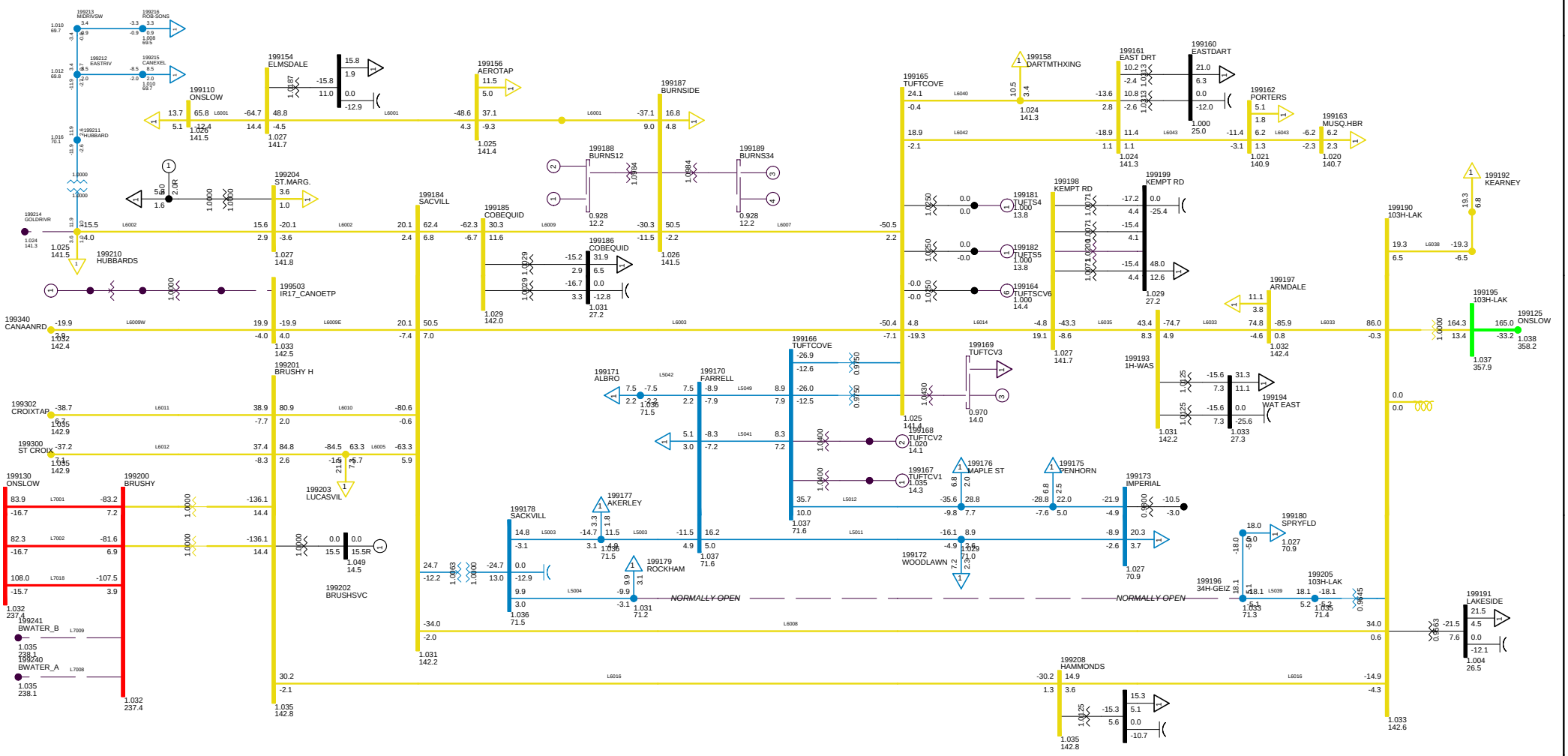

2013 LIGHT LOAD NS-NB=0
C40 DCT L7008 L7009 ISOLATES WEST
METRO ZONE TUE, DEC 09 2008 21:47

Bus - VOLTAGE (KV/PU)
Branch - MW/MVAR
Equipment - MW/MVAR
100.0%RATEA
1.050OV 0.950UV
KV: <=30.000 <=69.000 <=138.000 <=230.000 <=345.000 >345.000

Figure __

Total Wind Gen: 290.1 MW
Gross Tupper 155.0 MW
Gross Wreck Cove 0.0 MW
Gross Lingan 390.0 MW
Gross Trenton 100.0 MW
Gross Gas Turbine 0.0 MW
Gross Pt Aconi 185.0 MW
Gross Tuft's Cove 0.0 MW
Gross Small Hydro 26.0 MW
Net Stora Load 117.4 MW
Total BMPC Load 42.5 MW

NSX 35.9 MW
CBX 479.7 MW
ONI 582.2 MW
ONS 539.5 MW

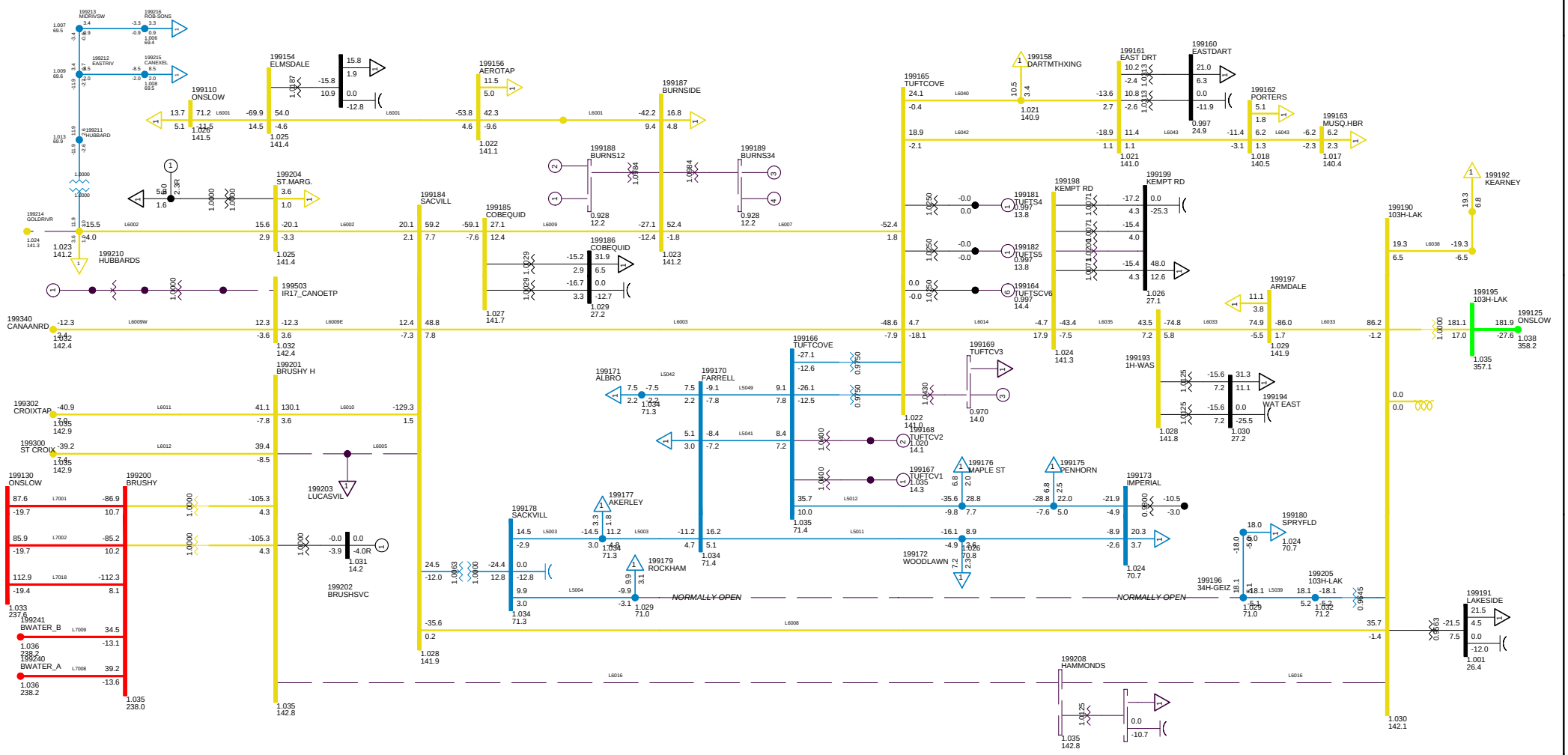

2013 LIGHT LOAD NS-NB=0
C41 1P FAULT ON L6016, BBU 622
METRO ZONE TUE, DEC 09 2008 21:47

Bus - VOLTAGE (KV/PU)
Branch - MW/MVAR
Equipment - MW/MVAR
100.0%RATEA
1.050OV 0.950UV
KV: <=30.000 <=69.000 <=138.000 <=230.000 <=345.000 >345.000

Figure __

Total Wind Gen: 290.1 MW | Gross Tupper 155.0 MW | Gross Wreck Cove 0.0 MW

Gross Lingan 390.0 MW | Gross Trenton 100.0 MW | Gross Gas Turbine 0.0 MW

Gross Pt Aconi 185.0 MW | Gross Tuft's Cove 0.0 MW | Gross Small Hydro 26.0 MW

Net Stora Load 117.4 MW | Total BMPC Load 42.5 MW

NSX 23.3 MW

CBX 479.5 MW

ONI 581.7 MW

ONS 551.4 MW

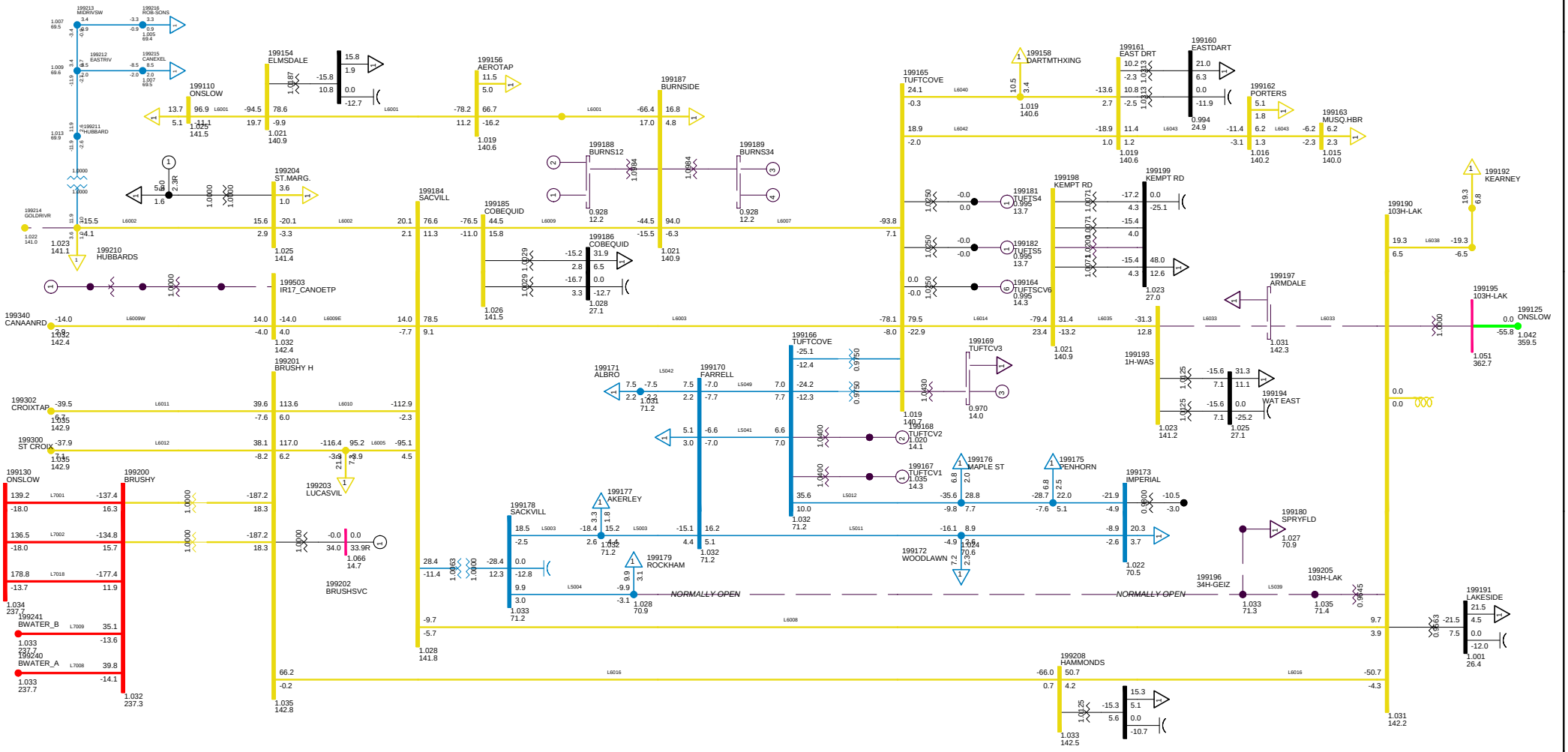

2013 LIGHT LOAD NS-NB=0
C42 1P L6033, BBU 103H-632
METRO ZONE TUE, DEC 09 2008 21:47

Bus - VOLTAGE (KV/PU)
Branch - MW/MVAR
Equipment - MW/MVAR
100.0%RATEA
1.050OV 0.950UV
KV: <=30.000 <=69.000 <=138.000 <=230.000 <=345.000 >345.000

Figure __

Total Wind Gen: 290.1 MW
Gross Tupper 155.0 MW
Gross Wreck Cove 0.0 MW
Gross Lingan 390.0 MW
Gross Trenton 100.0 MW
Gross Gas Turbine 0.0 MW
Gross Pt Aconi 185.0 MW
Gross Tuft's Cove 0.0 MW
Gross Small Hydro 26.0 MW
Net Stora Load 117.4 MW
Total BMPC Load 42.5 MW

NSX 18.9 MW
CBX 479.7 MW
ONI 582.2 MW
ONS 556.5 MW

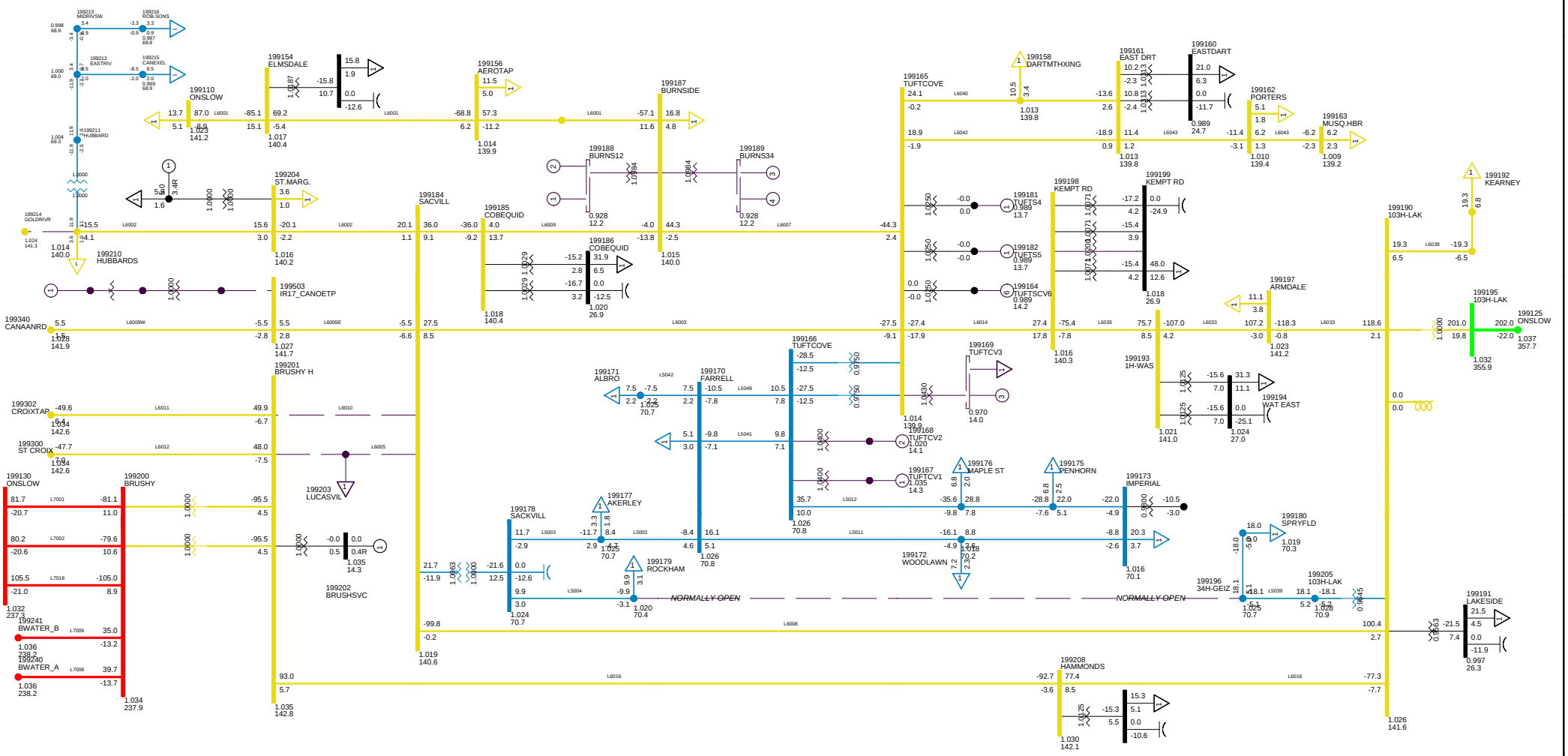

2013 LIGHT LOAD NS-NB=0
C43 BBU L6005 L6010 90H-608
METRO ZONE TUE, DEC 09 2008 21:47

Bus - VOLTAGE (KV/PU)
Branch - MW/MVAR
Equipment - MW/MVAR
100.0%RATEA
1.050OV 0.950UV
KV: <=30.000 <=69.000 <=138.000 <=230.000 <=345.000 >345.000

Figure __

Total Wind Gen: 290.1 MW
Gross Tupper 155.0 MW
Gross Wreck Cove 0.0 MW
Gross Lingan 390.0 MW
Gross Trenton 100.0 MW
Gross Gas Turbine 0.0 MW
Gross Pt Aconi 185.0 MW
Gross Tuft's Cove 0.0 MW
Gross Small Hydro 26.0 MW
Net Stora Load 117.4 MW
Total BMPC Load 42.5 MW

NSX 31.6 MW
CBX 479.7 MW
ONI 582.1 MW
ONS 543.8 MW

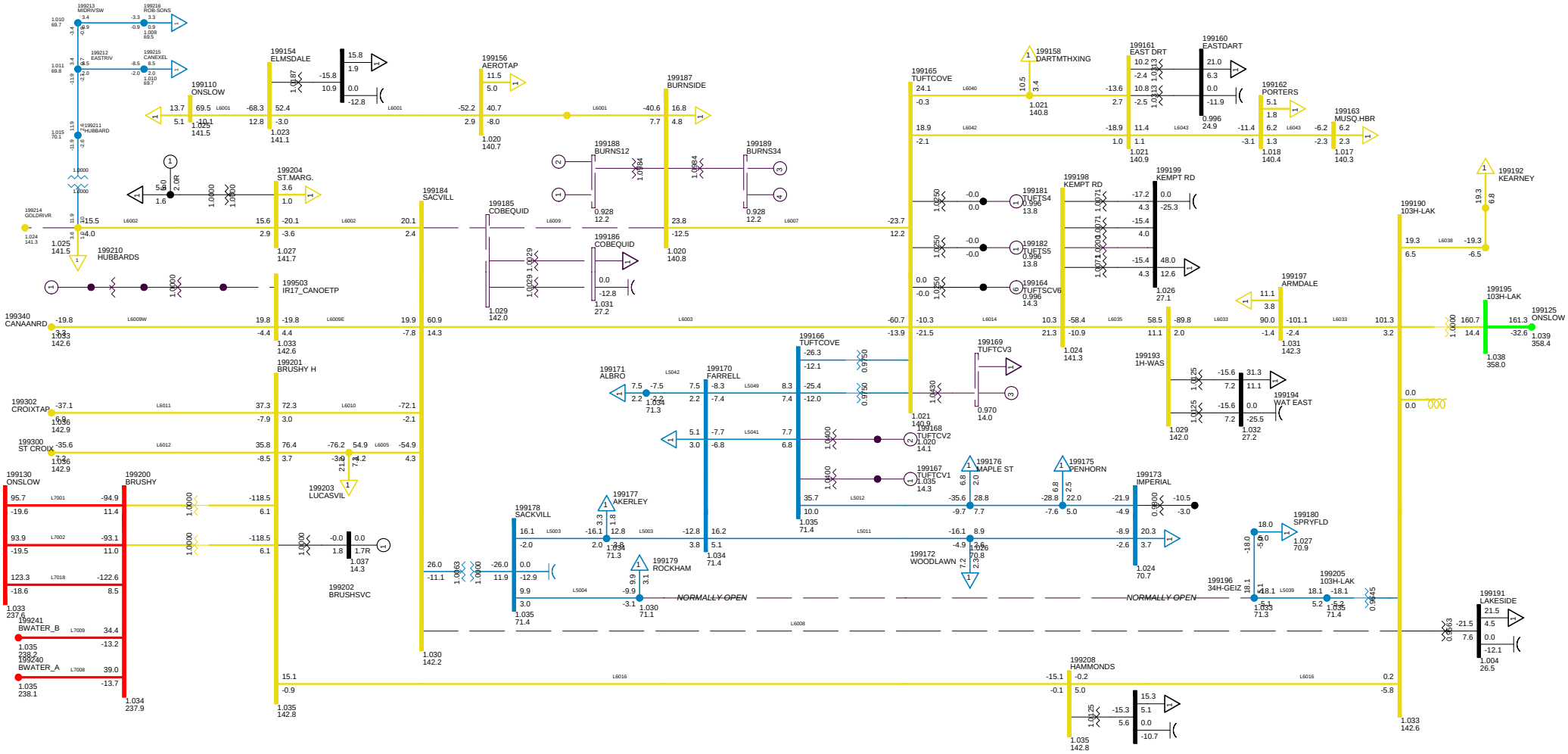

2013 LIGHT LOAD NS-NB=0
C44 BBU L6008 L6009 90H-611
METRO ZONE TUE, DEC 09 2008 21:47

Bus - VOLTAGE (KV/PU)
Branch - MW/MVAR
Equipment - MW/MVAR
100.0%RATEA
1.050OV 0.950UV
KV: <=30.000 <=69.000 <=138.000 <=230.000 <=345.000 >345.000

Figure __

Total Wind Gen: 290.1 MW
Gross Tupper 155.0 MW
Gross Wreck Cove 0.0 MW
Gross Lingan 390.0 MW
Gross Trenton 100.0 MW
Gross Gas Turbine 0.0 MW
Gross Pt Aconi 185.0 MW
Gross Tuft's Cove 0.0 MW
Gross Small Hydro 26.0 MW
Net Stora Load 117.4 MW
Total BMPC Load 42.5 MW

NSX 56.4 MW
CBX 479.7 MW
ONI 582.1 MW
ONS 519.0 MW

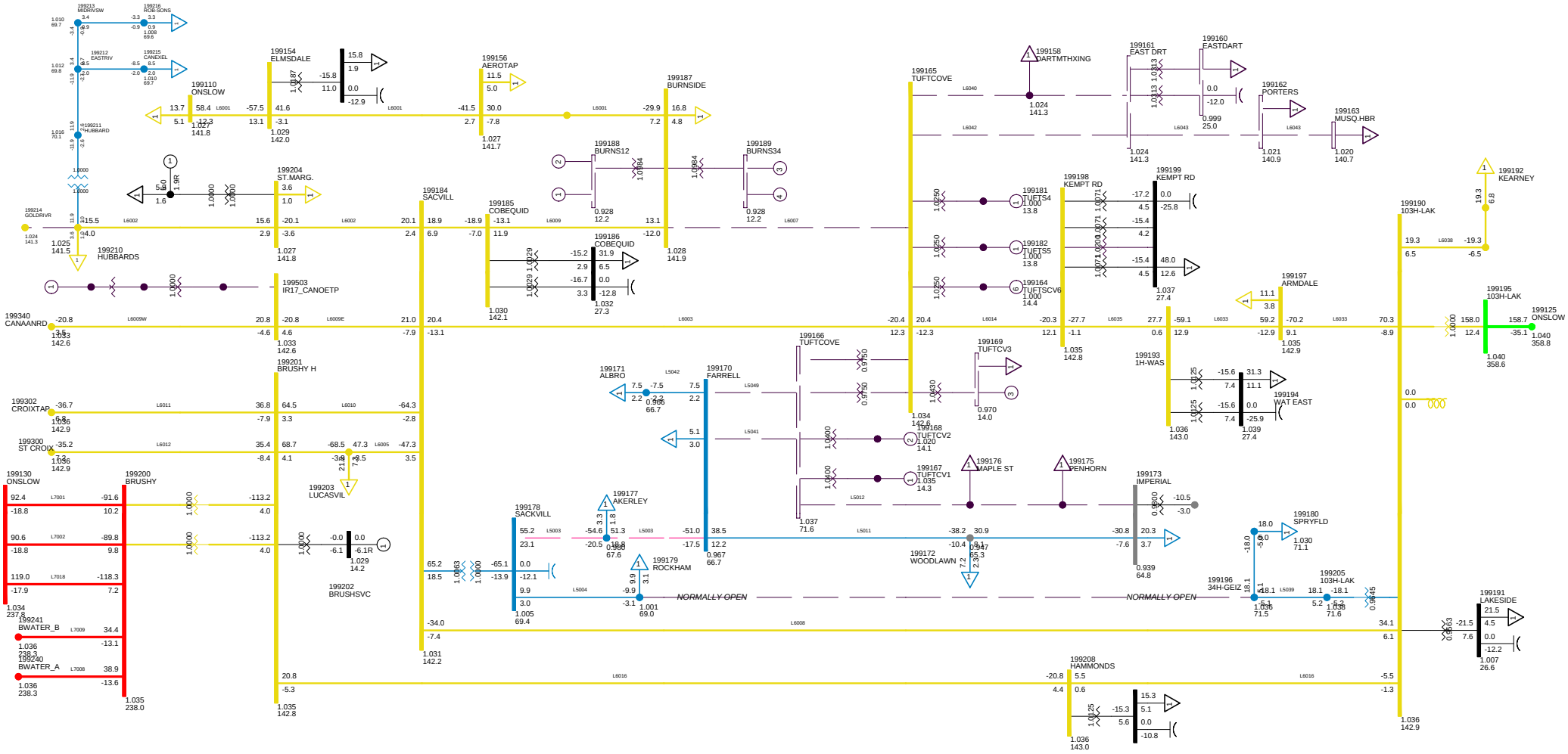

2013 LIGHT LOAD NS-NB=0
C45 BBU ON 91H-523
METRO ZONE TUE, DEC 09 2008 21:47

Bus - VOLTAGE (KV/PU)
Branch - MW/MVAR
Equipment - MW/MVAR
100.0%RATEA
1.050OV 0.950UV
KV: <=30.000 <=69.000 <=138.000 <=230.000 <=345.000 >345.000

Figure __

Total Wind Gen: 290.1 MW
Gross Tupper 155.0 MW
Gross Wreck Cove 0.0 MW
Gross Lingan 390.0 MW
Gross Trenton 100.0 MW
Gross Gas Turbine 0.0 MW
Gross Pt Aconi 185.0 MW
Gross Tuft's Cove 0.0 MW
Gross Small Hydro 26.0 MW

Net Stora Load 117.4 MW
Total BMPC Load 42.5 MW

NSX 49.3 MW
CBX 479.7 MW
ONI 582.2 MW
ONS 526.1 MW

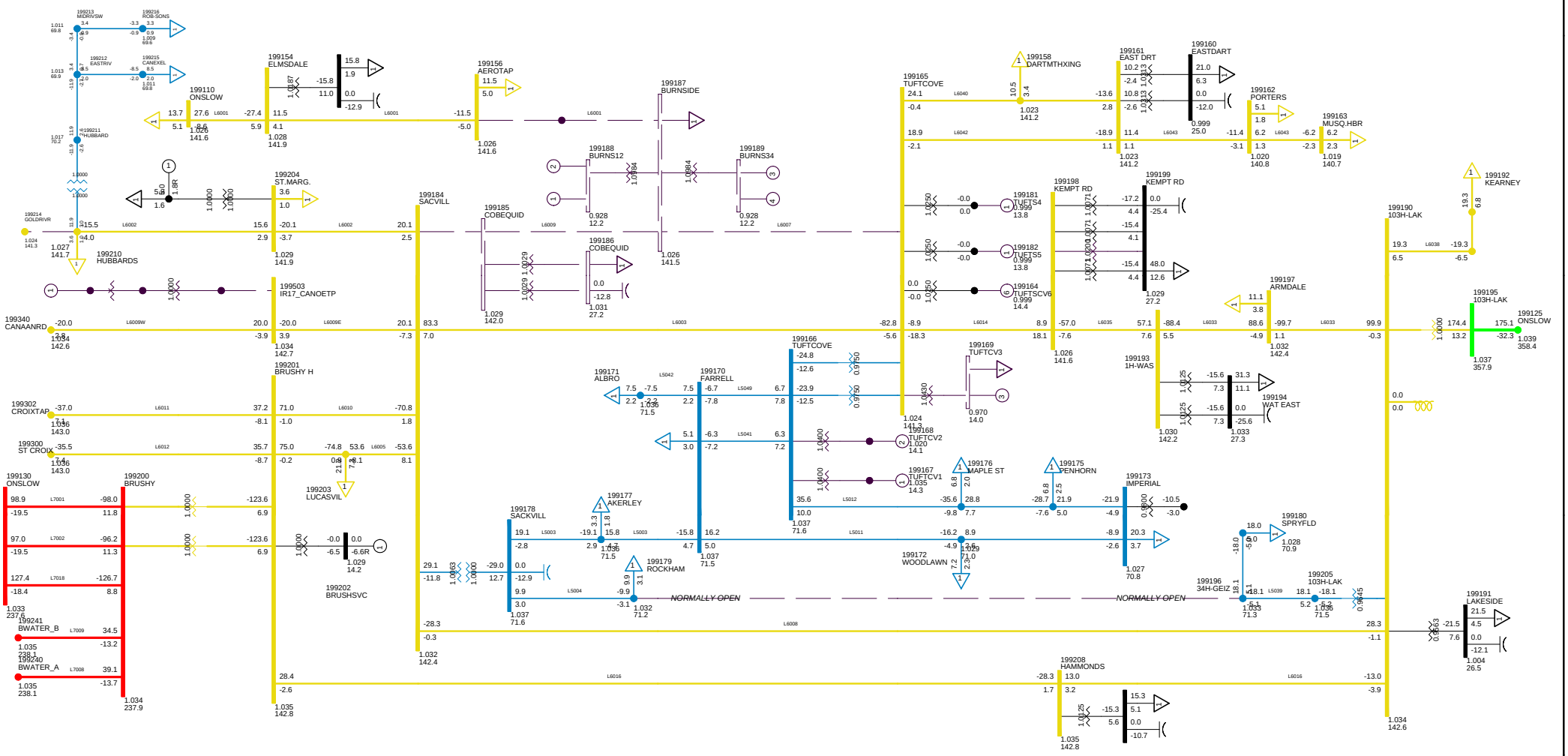

2013 LIGHT LOAD NS-NB=0
C46 1P L6009 BBU ON 108H 607
METRO ZONE TUE, DEC 09 2008 21:47

Bus - VOLTAGE (KV/PU)
Branch - MW/MVAR
Equipment - MW/MVAR
100.0%RATEA
1.050OV 0.950UV
KV: <=30.000 <=69.000 <=138.000 <=230.000 <=345.000 >345.000

Figure __

Total Wind Gen: 290.1 MW | Gross Tupper 155.0 MW | Gross Wreck Cove 0.0 MW

Gross Lingan 390.0 MW | Gross Trenton 100.0 MW | Gross Gas Turbine 0.0 MW

Gross Pt Aconi 185.0 MW | Gross Tuft's Cove 0.0 MW | Gross Small Hydro 26.0 MW

Net Stora Load 117.4 MW | Total BMPC Load 42.5 MW

NSX 53.8 MW

CBX 479.5 MW

ONI 581.7 MW

ONS 521.1 MW

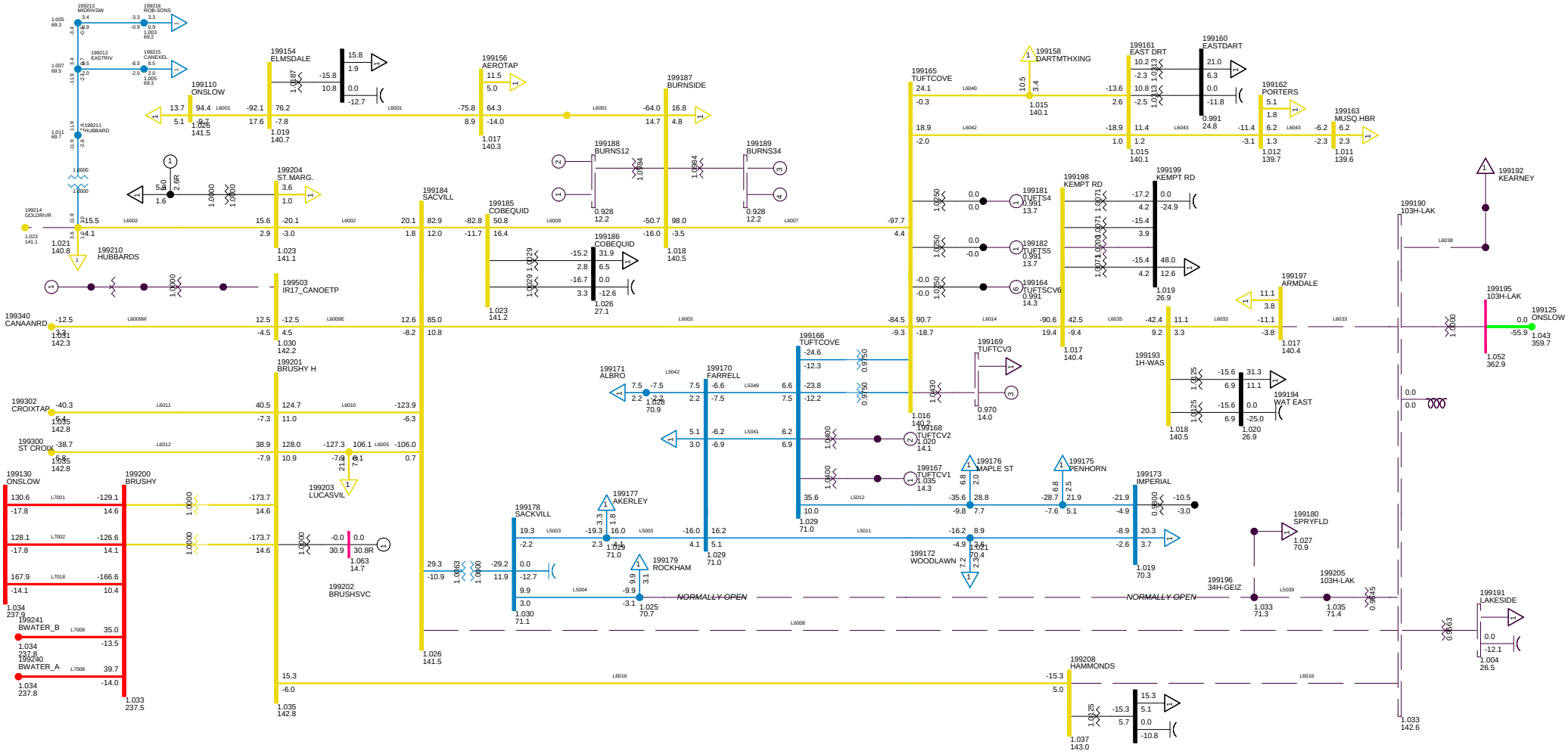

2013 LIGHT LOAD NS-NB=0
C47 1P 103H-600
METRO ZONE TUE, DEC 09 2008 21:48

Bus - VOLTAGE (KV/PU)
Branch - MW/MVAR
Equipment - MW/MVAR
100.0%RATEA
1.050OV 0.950UV
KV: <=30.000 <=69.000 <=138.000 <=230.000 <=345.000 >345.000

Figure __

Total Wind Gen: 290.1 MW | Gross Tupper 155.0 MW | Gross Wreck Cove 0.0 MW

Gross Lingan 390.0 MW | Gross Trenton 100.0 MW | Gross Gas Turbine 0.0 MW

Gross Pt Aconi 185.0 MW | Gross Tuft's Cove 0.0 MW | Gross Small Hydro 26.0 MW

Net Stora Load 117.4 MW | Total BMPC Load 42.5 MW

NSX -1.0 MW

CBX 479.7 MW

ONI 582.1 MW

ONS 576.3 MW

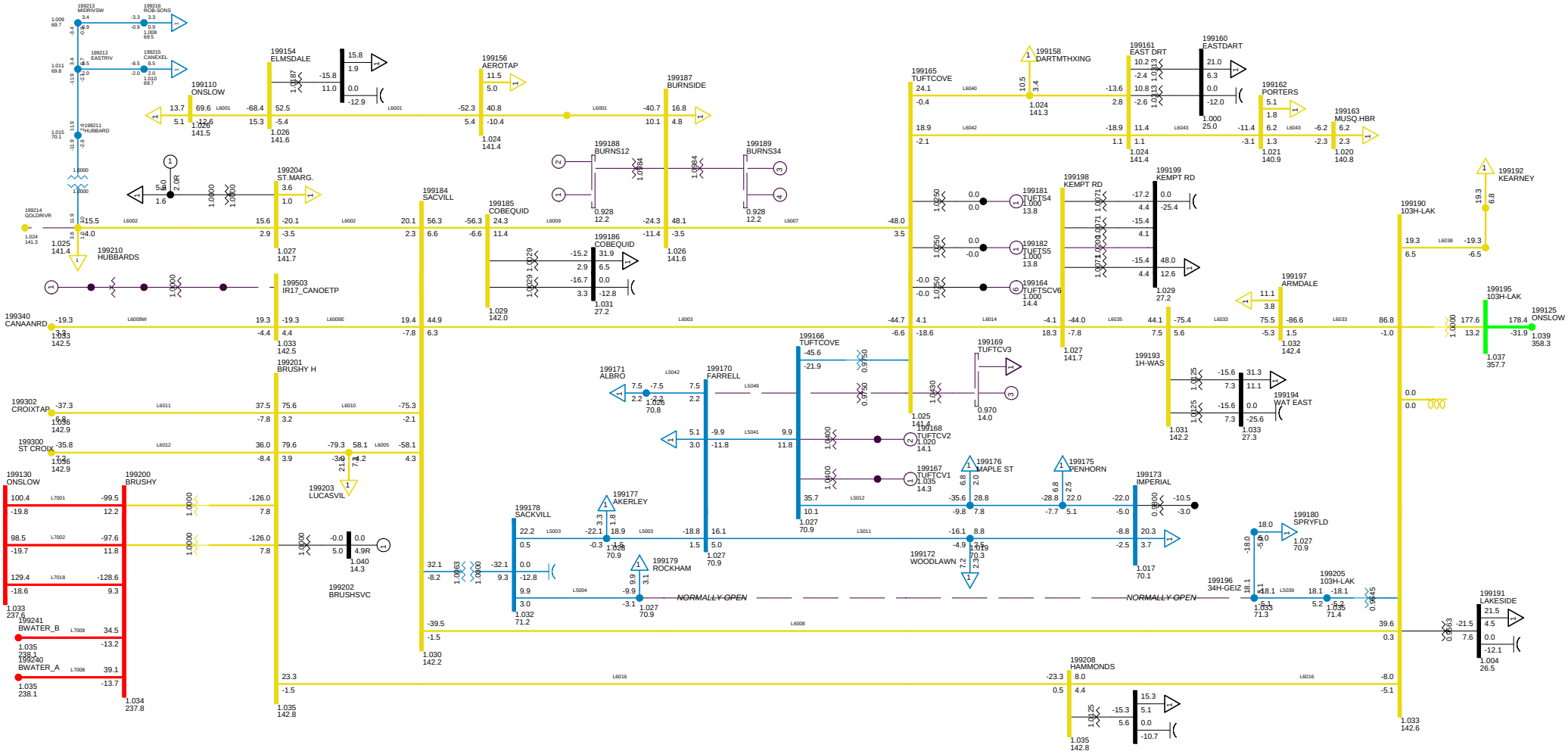

2013 LIGHT LOAD NS-NB=0
C48 1P ON BREAKER 91H-523
METRO ZONE TUE, DEC 09 2008 21:48

Bus - VOLTAGE (KV/PU)
Branch - MW/MVAR
Equipment - MW/MVAR
100.0%RATEA
1.050OV 0.950UV
KV: <=30.000 <=69.000 <=138.000 <=230.000 <=345.000 >345.000

Figure __

Total Wind Gen: 290.1 MW
Gross Tupper 155.0 MW
Gross Wreck Cove 0.0 MW
Gross Lingan 390.0 MW
Gross Trenton 100.0 MW
Gross Gas Turbine 0.0 MW
Gross Pt Aconi 185.0 MW
Gross Tuft's Cove 0.0 MW
Gross Small Hydro 26.0 MW
Net Stora Load 117.4 MW
Total BMPC Load 42.5 MW

NSX 48.3 MW
CBX 479.7 MW
ONI 582.1 MW
ONS 527.0 MW

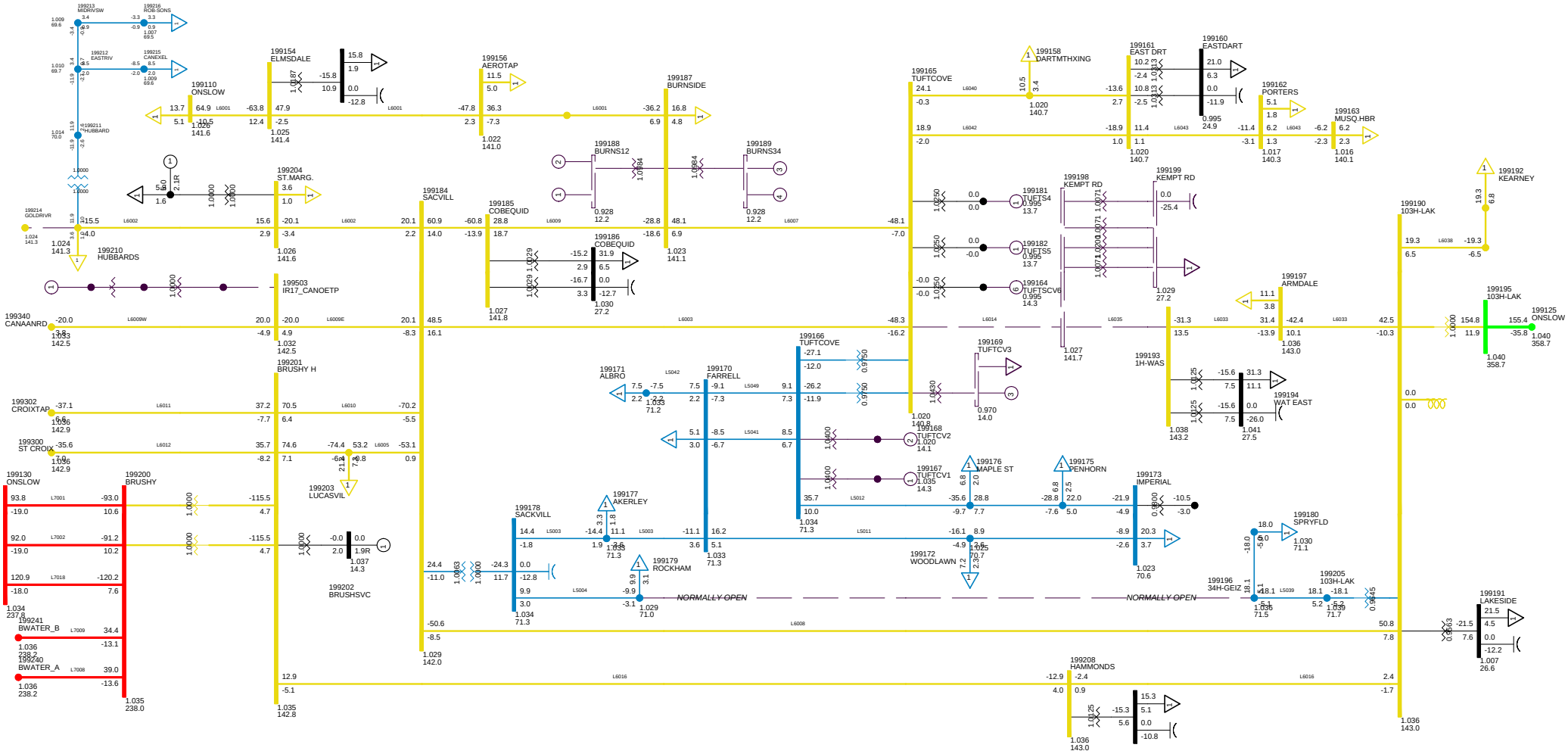

2013 LIGHT LOAD NS-NB=0
C49 1-PH ON 104H-600
METRO ZONE TUE, DEC 09 2008 21:48

Bus - VOLTAGE (KV/PU)
Branch - MW/MVAR
Equipment - MW/MVAR
100.0%RATEA
1.050OV 0.950UV
KV: <=30.000 <=69.000 <=138.000 <=230.000 <=345.000 >345.000

Figure __

NSX -0.9 MW
CBX 479.7 MW
ONI 582.1 MW
ONS 576.2 MW

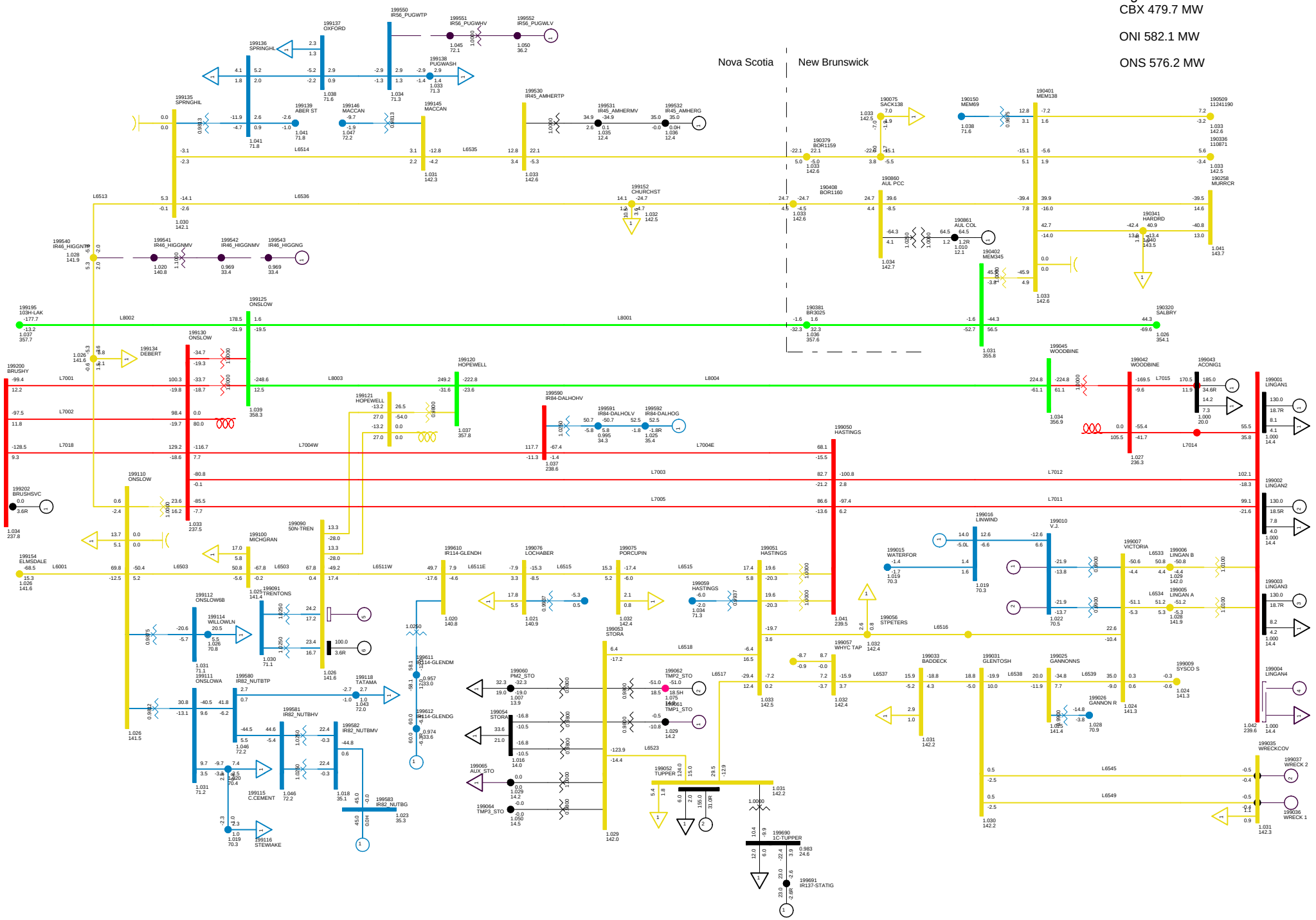

2010 LIGHT, NSLOAD=1150
NS-NB=0; NB-NE=0; CBX=469; ONI=482 ONS=475
NORTHEASTERN NS TUE, DEC 09 2008 21:48

Total Wind Gen: 290.1 MW
Gross Lingan 390.0 MW
Gross Pt Aconi 185.0 MW
Gross Tupper 155.0 MW
Gross Trenton 100.0 MW
Gross Tuft's Cove 0.0 MW
Gross Wreck Cove 0.0 MW
Gross Gas Turbine 0.0 MW
Gross Small Hydro 26.0 MW
Net Stora Load 117.4 MW
Total BMPC Load 42.5 MW

Bus - VOLTAGE (KV/PU)
Branch - MW/MVAR
Equipment - MW/MVAR
110.0%RATEA
1.050OV 0.950UV
KV: <=25.000 <=69.000 <=138.000 <=230.000 <=345.000 >345.000

Figure ___

NSX -22.8 MW

CBX 467.7 MW

ONI 561.2 MW

ONS 577.1 MW

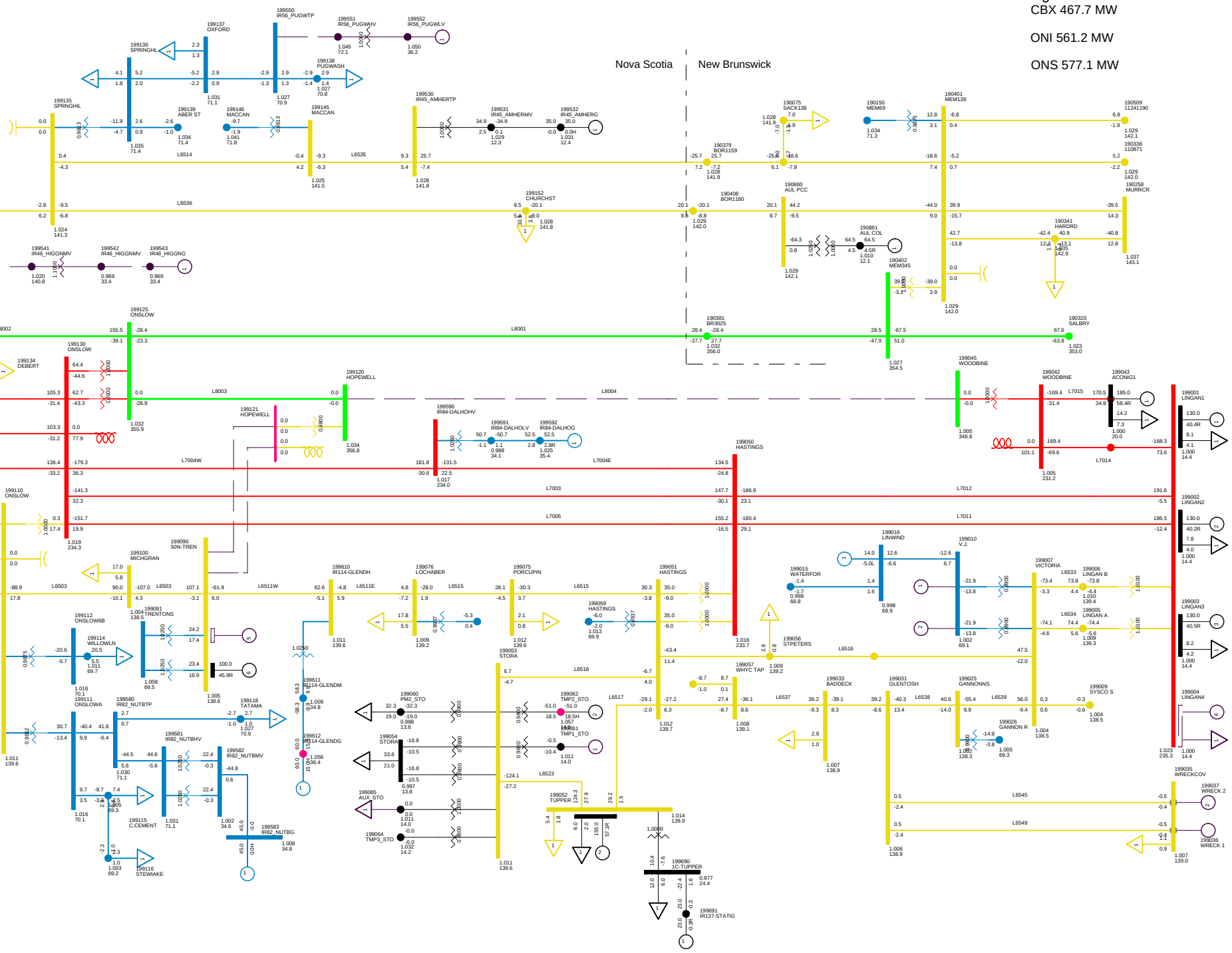

2013 LIGHT LOAD NS-NB=0
C50 1P FAULT ON L6507, BBU 79N-606
NORTHEASTERN NS TUE, DEC 09 2008 21:48

Total Wind Gen: 290.1 MW
Gross Lingan 390.0 MW
Gross Pt Aconi 185.0 MW
Gross Tupper 155.0 MW
Gross Trenton 100.0 MW
Gross Tuft's Cove 0.0 MW
Gross Wreck Cove 0.0 MW
Gross Gas Turbine 0.0 MW
Gross Small Hydro 26.0 MW
Net Stora Load 117.4 MW
Total BMPC Load 42.5 MW

Bus - VOLTAGE (KV/PU)
Branch - MW/MVAR
Equipment - MW/MVAR
110.0%RATEA
1.0500V 0.950UV
KV: <=25.000 <=69.000 <=138.000 <=230.000 <=345.000 >345.000

Figure ___

NSX 2.1 MW
CBX 479.6 MW
ONI 581.9 MW
ONS 576.7 MW

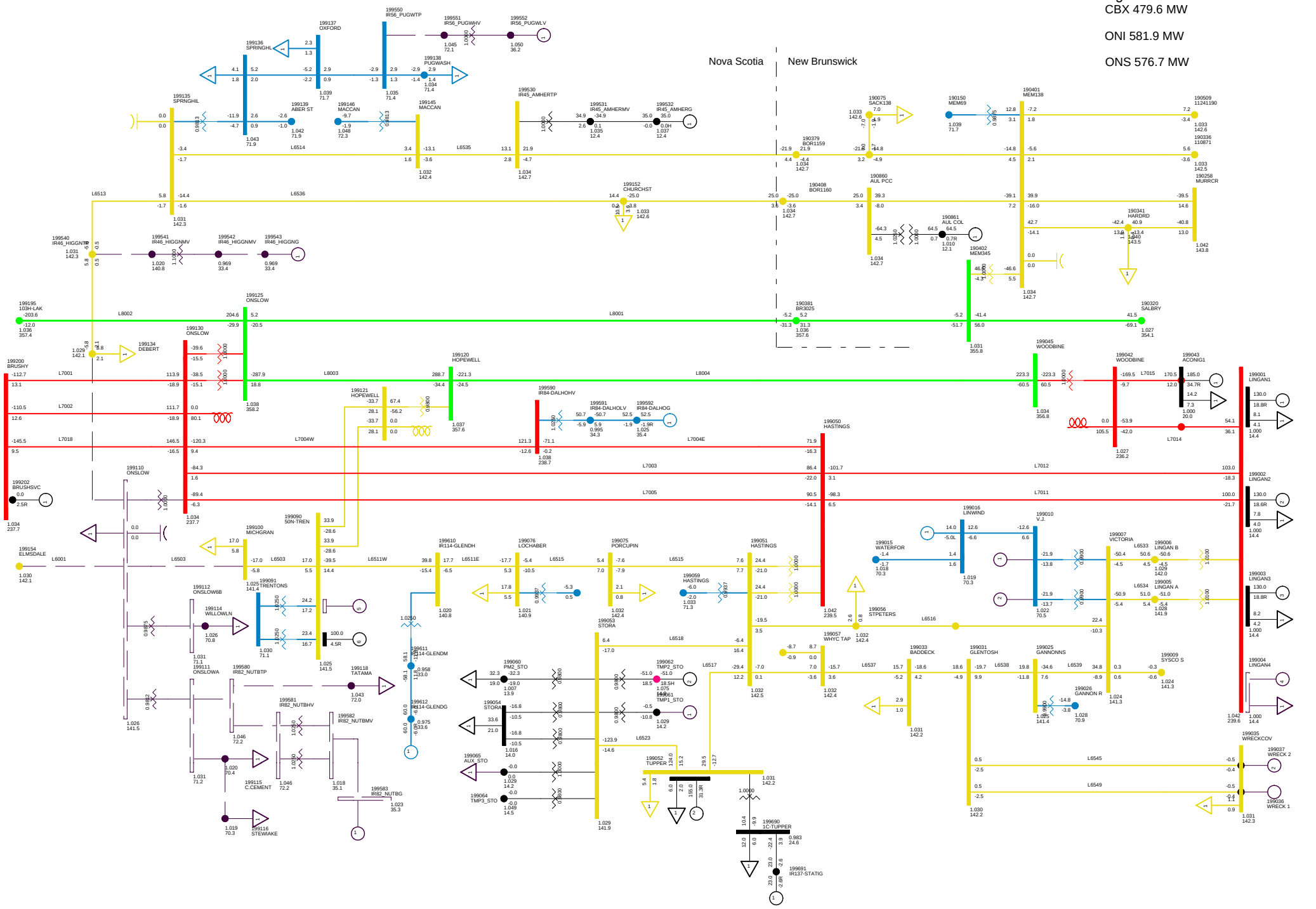

2013 LIGHT LOAD NS-NB=0
C51 1P FAULT ON 1N BUS 61
NORTHEASTERN NS TUE, DEC 09 2008 21:48

Total Wind Gen: 245.1 MW | Gross Tupper 155.0 MW | Gross Wreck Cove 0.0 MW | Net Stora Load 117.4 MW
Gross Lingan 390.0 MW | Gross Trenton 100.0 MW | Gross Gas Turbine 0.0 MW | Total BMPC Load 42.5 MW
Gross Pt Aconi 185.0 MW | Gross Tuft's Cove 0.0 MW | Gross Small Hydro 26.0 MW

Bus - VOLTAGE (KV/PU)
Branch - MW/MVAR
Equipment - MW/MVAR
110.0%RATEA
1.0500V 0.950UV
KV: <=25.000 <=69.000 <=138.000 <=230.000 <=345.000 >345.000

Figure ___

NSX 48.6 MW

CBX 530.9 MW

ONI 631.6 MW

ONS 576.3 MW

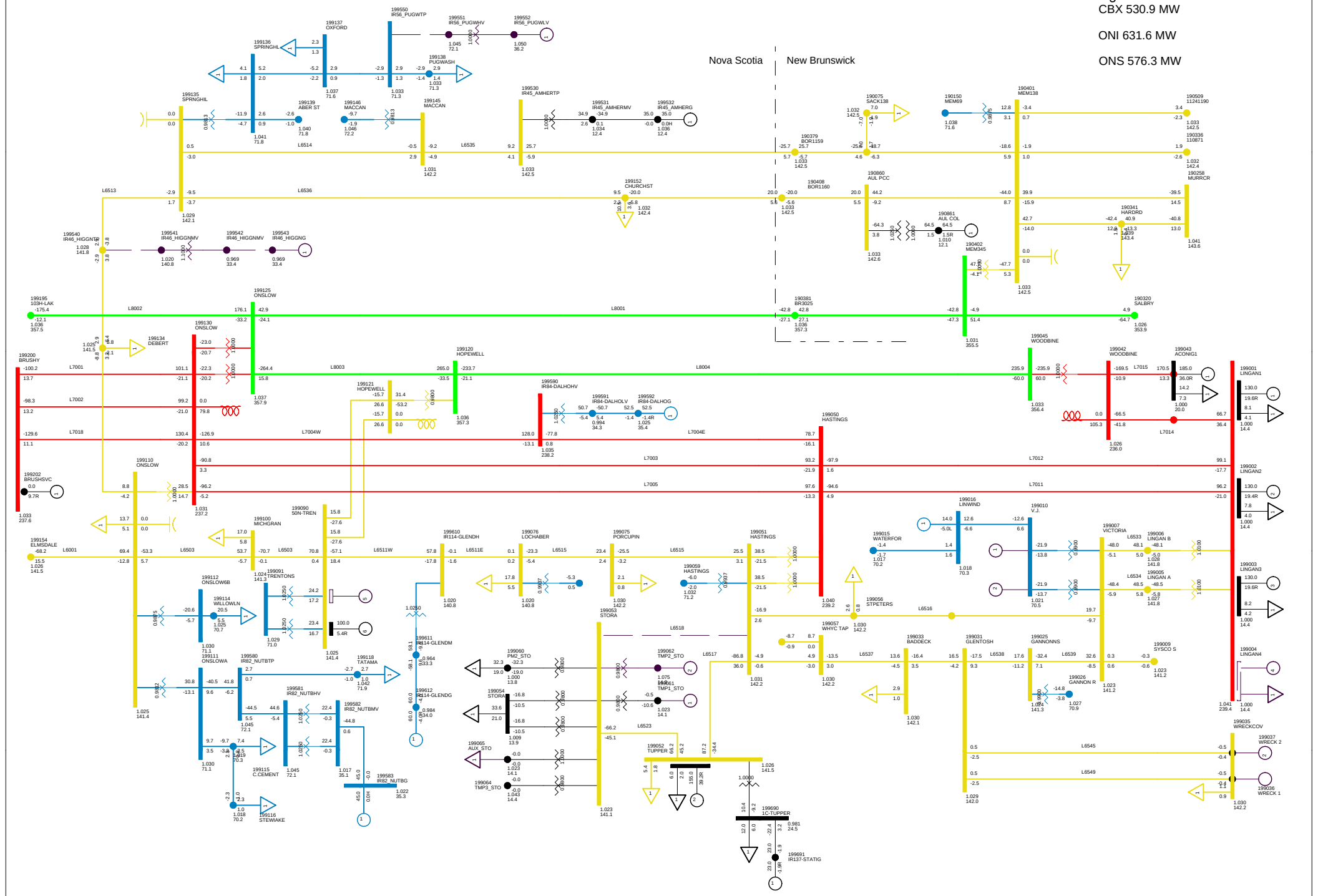

2013 LIGHT LOAD NS-NB=0
C52 BBU 47C-601
NORTHEASTERN NS TUE, DEC 09 2008 21:48

Total Wind Gen: 290.1 MW | Gross Tupper 155.0 MW | Gross Wreck Cove 0.0 MW | Net Stora Load 66.2 MW
Gross Lingan 390.0 MW | Gross Trenton 100.0 MW | Gross Gas Turbine 0.0 MW | Total BMPC Load 42.5 MW
Gross Pt Aconi 185.0 MW | Gross Tuft's Cove 0.0 MW | Gross Small Hydro 26.0 MW

Bus - VOLTAGE (KV/PU)
Branch - MW/MVAR
Equipment - MW/MVAR
110.0%RATEA
1.050OV 0.950UV
KV: <=25.000 <=69.000 <=138.000 <=230.000 <=345.000 >345.000

Figure ___

NSX -0.9 MW

CBX 479.7 MW

ONI 582.1 MW

ONS 576.2 MW

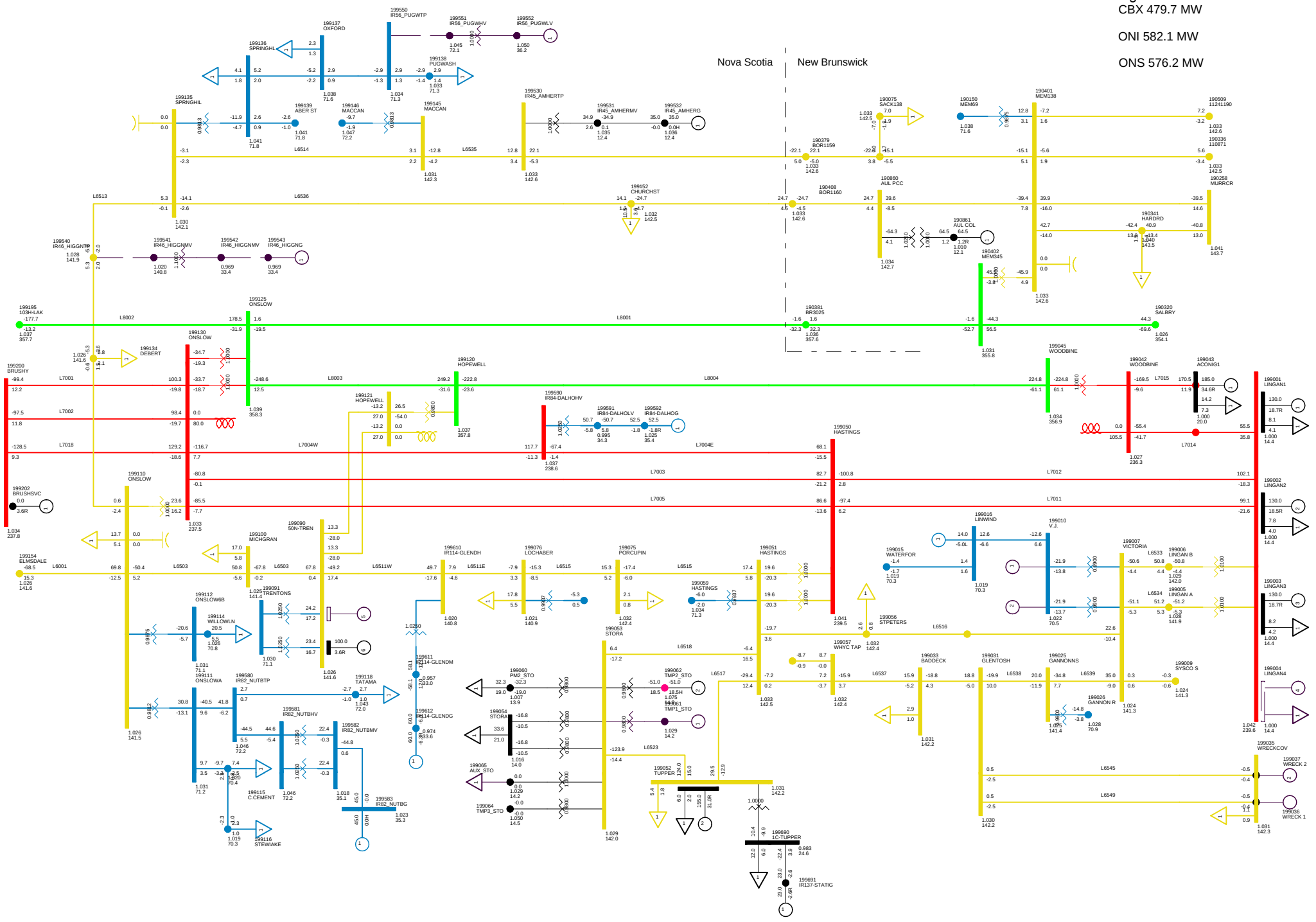

2013 LIGHT LOAD NS-NB=0
C53 BREAKR 47C-602 FAULT
NORTHEASTERN NS TUE, DEC 09 2008 21:48

Total Wind Gen: 290.1 MW
Gross Lingan 390.0 MW
Gross Pt Aconi 185.0 MW
Gross Tupper 155.0 MW
Gross Trenton 100.0 MW
Gross Tuft's Cove 0.0 MW
Gross Wreck Cove 0.0 MW
Gross Gas Turbine 0.0 MW
Gross Small Hydro 26.0 MW
Net Stora Load 117.4 MW
Total BMPC Load 42.5 MW

Bus - VOLTAGE (KV/PU)
Branch - MW/MVAR
Equipment - MW/MVAR
110.0%RATEA
1.0500V 0.950UV
KV: <=25.000 <=69.000 <=138.000 <=230.000 <=345.000 >345.000

Figure ___

NSX -0.9 MW

CBX 479.7 MW

ONI 582.1 MW

ONS 576.2 MW

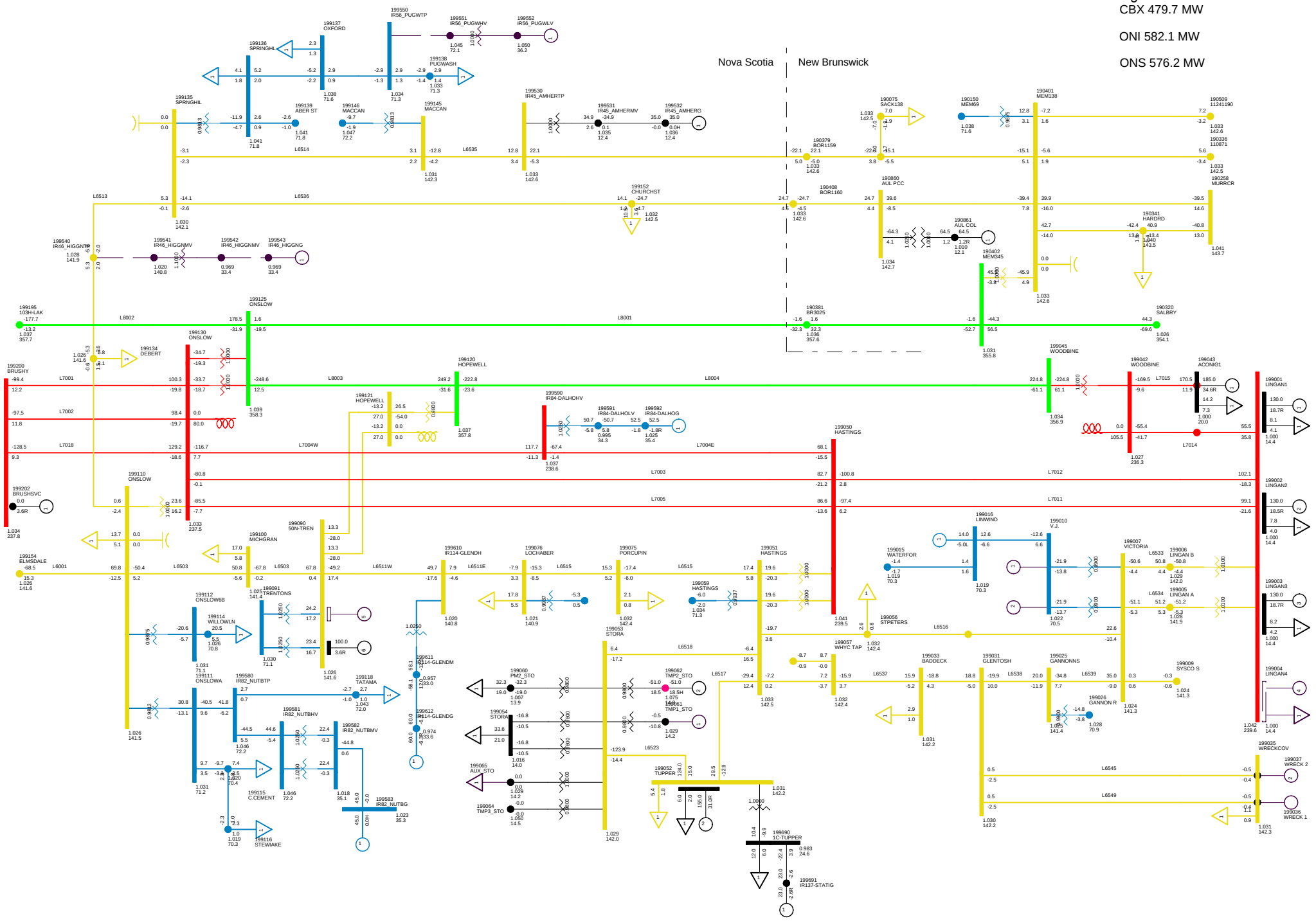

2010 LIGHT, NSLOAD=1150
NS-NB=0; NB-NE=0; CBX=469; ONI=482 ONS=475
NORTHEASTERN NS TUE, DEC 09 2008 21:49

Total Wind Gen: 290.1 MW | Gross Tupper 155.0 MW | Gross Wreck Cove 0.0 MW | Net Stora Load 117.4 MW
Gross Lingan 390.0 MW | Gross Trenton 100.0 MW | Gross Gas Turbine 0.0 MW | Total BMPC Load 42.5 MW
Gross Pt Aconi 185.0 MW | Gross Tuft's Cove 0.0 MW | Gross Small Hydro 26.0 MW

Bus - VOLTAGE (KV/PU)
Branch - MW/MVAR
Equipment - MW/MVAR
110.0%RATEA
1.0500V 0.950UV
KV: <=25.000 <=69.000 <=138.000 <=230.000 <=345.000 >345.000

Figure ___

NSX -8.6 MW

CBX 472.8 MW

ONI 574.5 MW

ONS 576.4 MW

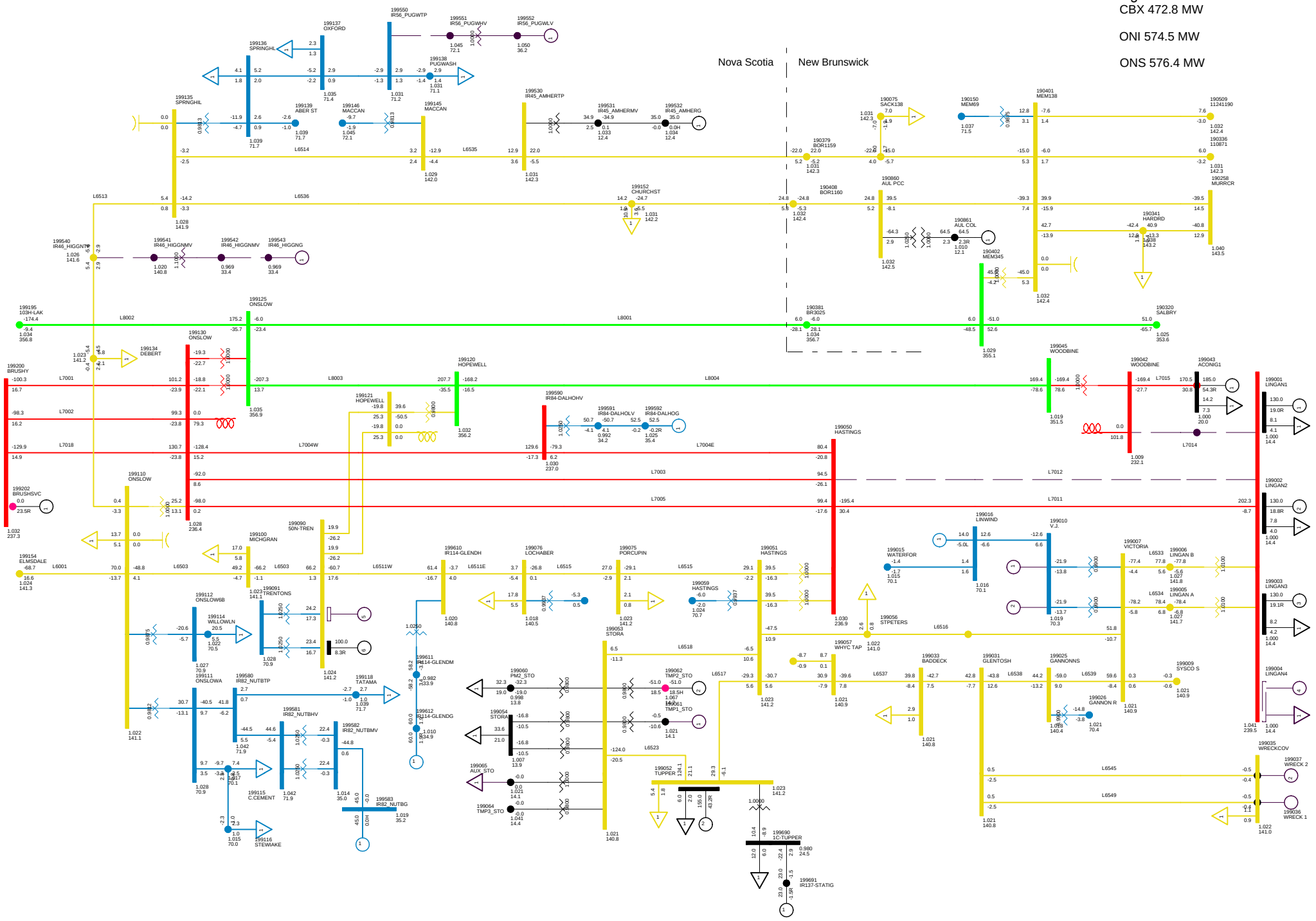

2013 LIGHT LOAD NS-NB=0
C54 BBU 88S-723 NO SPS
NORTHEASTERN NS TUE, DEC 09 2008 21:49

Total Wind Gen: 290.1 MW	Gross Tupper 155.0 MW	Gross Wreck Cove 0.0 MW	Net Stora Load 117.4 MW
Gross Lingan 390.0 MW	Gross Trenton 100.0 MW	Gross Gas Turbine 0.0 MW	Total BMPC Load 42.5 MW
Gross Pt Aconi 185.0 MW	Gross Tuft's Cove 0.0 MW	Gross Small Hydro 26.0 MW	

Bus - VOLTAGE (KV/PU)
Branch - MW/MVAR
Equipment - MW/MVAR

110.0%RATEA
1.0500V 0.950UV

KV: <=25.000 <=69.000 <=138.000 <=230.000 <=345.000 >345.000

Figure ___

NSX -5.3 MW

CBX 480.1 MW

ONI 580.1 MW

ONS 578.5 MW

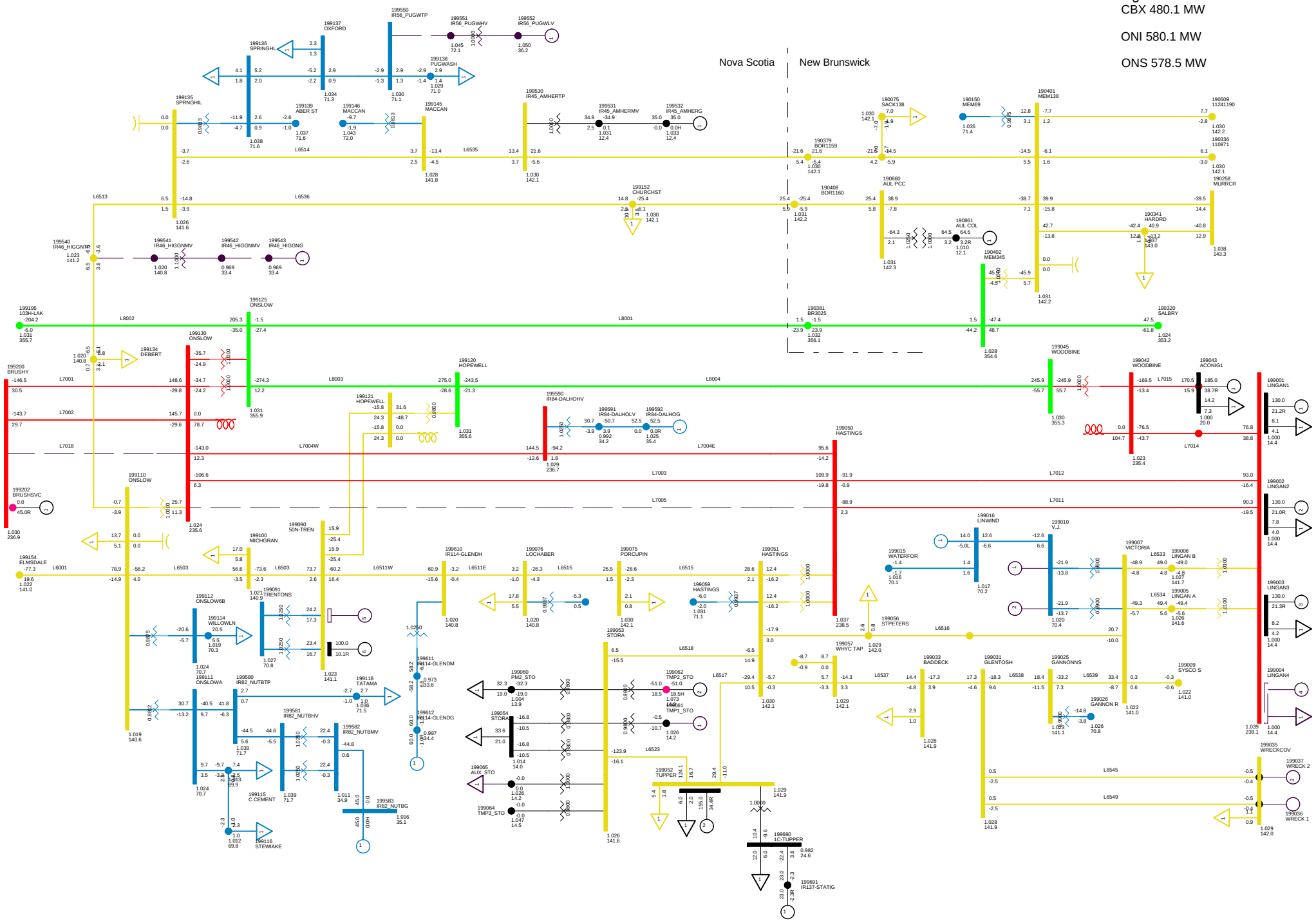

2013 LIGHT LOAD NS-NB=0
C55 BBU 67N-712
NORTHEASTERN NS TUE, DEC 09 2008 21:49

Total Wind Gen: 290.1 MW | Gross Tupper 155.0 MW | Gross Wreck Cove 0.0 MW | Net Stora Load 117.4 MW
Gross Lingan 390.0 MW | Gross Trenton 100.0 MW | Gross Gas Turbine 0.0 MW | Total BMPC Load 42.5 MW
Gross Pt Aconi 185.0 MW | Gross Tuft's Cove 0.0 MW | Gross Small Hydro 26.0 MW

Bus - VOLTAGE (KV/PU)
Branch - MW/MVAR
Equipment - MW/MVAR
110.0%RATEA
1.050OV 0.950UV
KV: <=25.000 <=69.000 <=138.000 <=230.000 <=345.000 >345.000

Figure ___

NSX -14.7 MW

CBX 475.1 MW

ONI 569.7 MW

ONS 577.5 MW

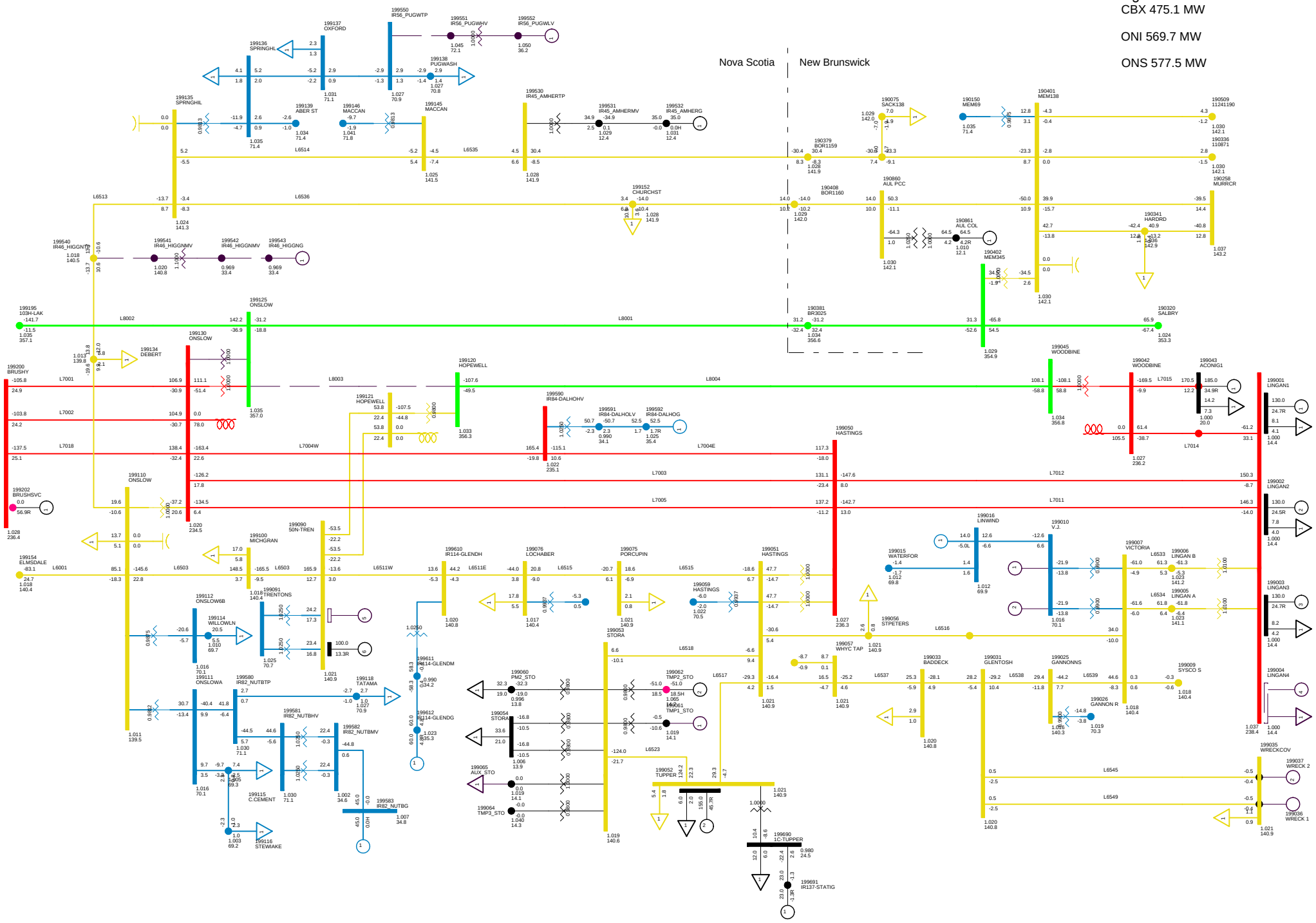

2013 LIGHT LOAD NS-NB=0
C56 BBU 67N-811 L8003 + T82 NO SPS
NORTHEASTERN NS TUE, DEC 09 2008 21:49

Total Wind Gen: 290.1 MW | Gross Tupper 155.0 MW | Gross Wreck Cove 0.0 MW | Net Stora Load 117.4 MW
Gross Lingan 390.0 MW | Gross Trenton 100.0 MW | Gross Gas Turbine 0.0 MW | Total BMPC Load 42.5 MW
Gross Pt Aconi 185.0 MW | Gross Tuft's Cove 0.0 MW | Gross Small Hydro 26.0 MW

Bus - VOLTAGE (KV/PU)
Branch - MW/MVAR
Equipment - MW/MVAR
110.0%RATEA
1.050OV 0.950UV
KV: <=25.000 <=69.000 <=138.000 <=230.000 <=345.000 >345.000

Figure ___

NSX -20.1 MW

CBX 475.1 MW

ONI 569.7 MW

ONS 582.9 MW

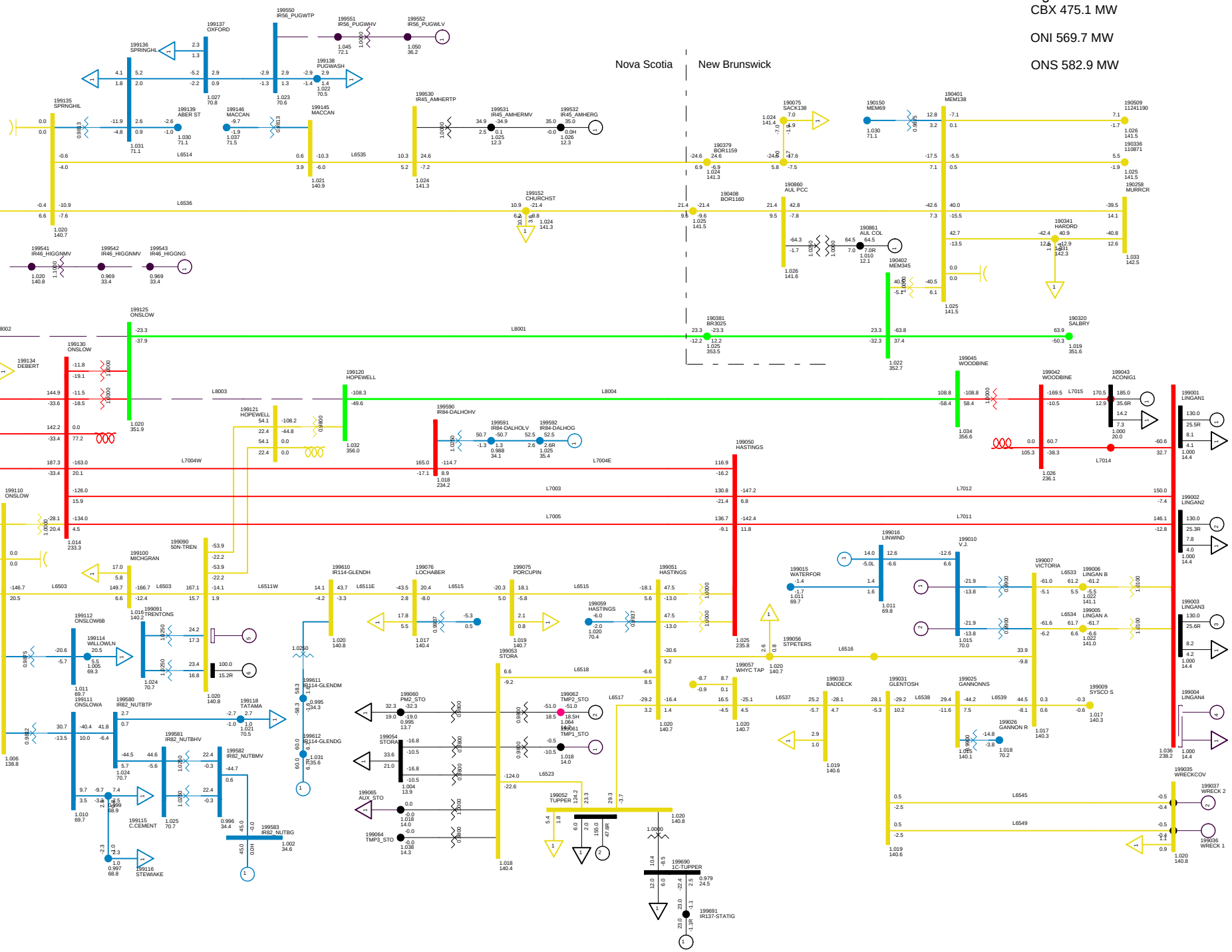

2013 LIGHT LOAD NS-NB=0
C57 BBU 67N-812 L8003+L8002 NO SPS
NORTHEASTERN NS TUE, DEC 09 2008 21:50

Total Wind Gen: 290.1 MW
Gross Lingan 390.0 MW
Gross Pt Aconi 185.0 MW
Gross Tupper 155.0 MW
Gross Trenton 100.0 MW
Gross Tuft's Cove 0.0 MW
Gross Wreck Cove 0.0 MW
Gross Gas Turbine 0.0 MW
Gross Small Hydro 26.0 MW
Net Stora Load 117.4 MW
Total BMPC Load 42.5 MW

Bus - VOLTAGE (KV/PU)
Branch - MW/MVAR
Equipment - MW/MVAR
110.0%RATEA
1.050OV 0.950UV
KV: <=25.000 <=69.000 <=138.000 <=230.000 <=345.000 >345.000

Figure ___

NSX -23.1 MW

CBX 467.7 MW

ONI 561.1 MW

ONS 577.3 MW

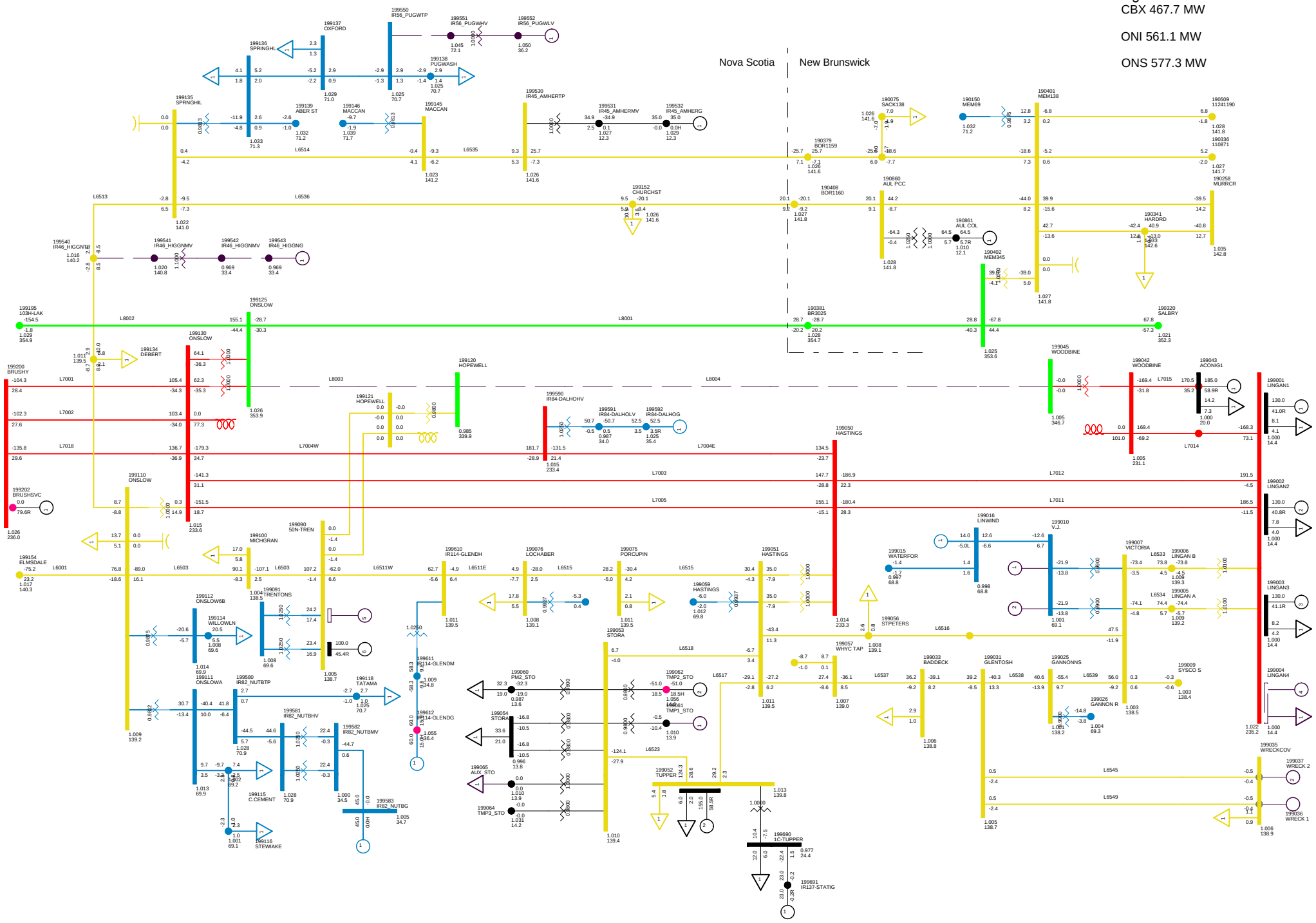

2013 LIGHT LOAD NS-NB=0
C58 BBU 79N-810 NO SPS
NORTHEASTERN NS TUE, DEC 09 2008 21:50

Total Wind Gen: 290.1 MW | Gross Tupper 155.0 MW | Gross Wreck Cove 0.0 MW | Net Stora Load 117.4 MW
Gross Lingan 390.0 MW | Gross Trenton 100.0 MW | Gross Gas Turbine 0.0 MW | Total BMPC Load 42.5 MW
Gross Pt Aconi 185.0 MW | Gross Tuft's Cove 0.0 MW | Gross Small Hydro 26.0 MW

Bus - VOLTAGE (KV/PU)
Branch - MW/MVAR
Equipment - MW/MVAR
110.0%RATEA
1.050OV 0.950UV
KV: <=25.000 <=69.000 <=138.000 <=230.000 <=345.000 >345.000

Figure ___

NSX -115.5 MW

CBX 362.2 MW

ONI 467.7 MW

ONS 576.2 MW

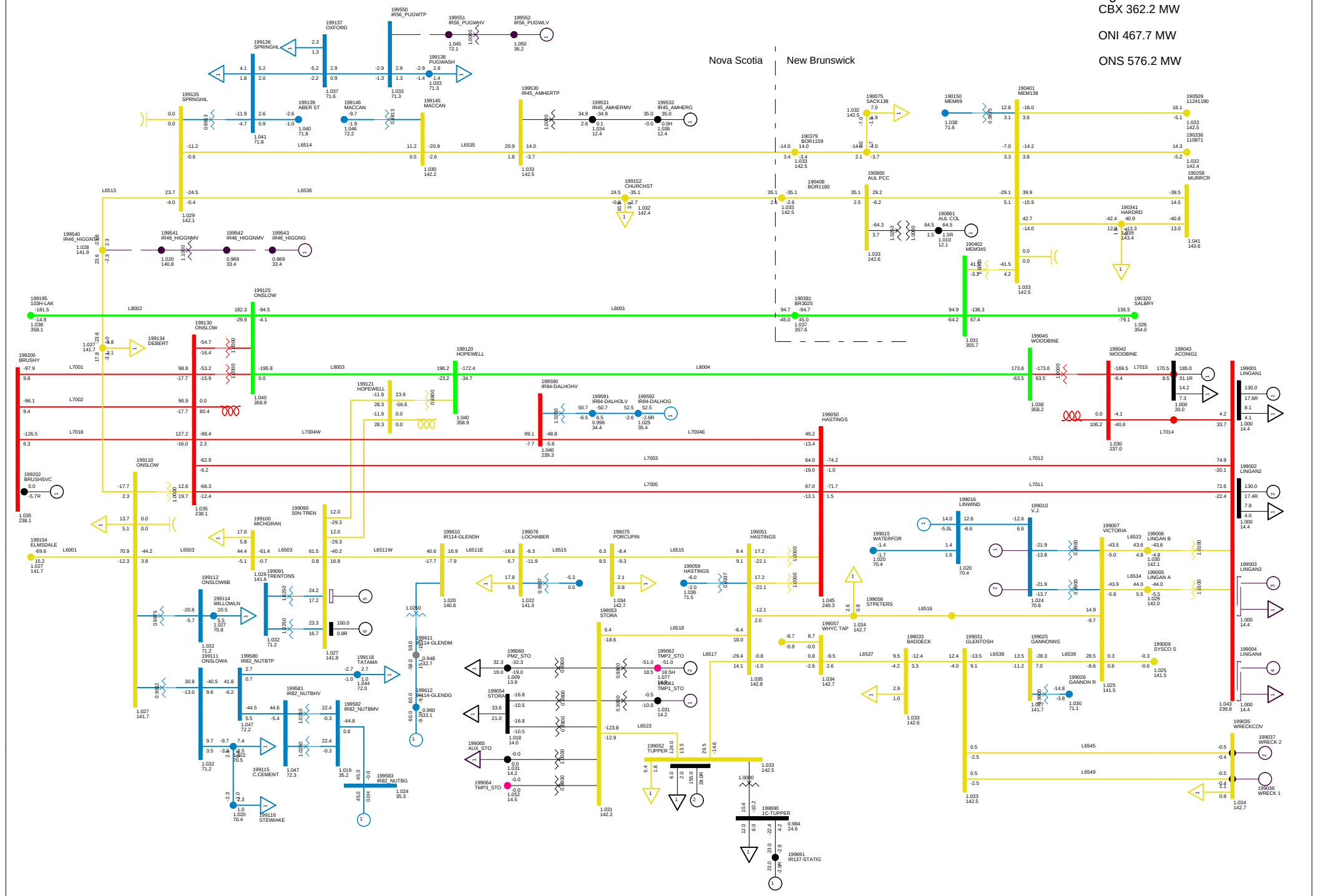

2013 LIGHT LOAD NS-NB=0
C59 BBU 88S-721 TRIP LINGAN 3 AND 4
NORTHEASTERN NS TUE, DEC 09 2008 21:50

Total Wind Gen: 290.1 MW | Gross Tupper 155.0 MW | Gross Wreck Cove 0.0 MW | Net Stora Load 117.4 MW
Gross Lingan 260.0 MW | Gross Trenton 100.0 MW | Gross Gas Turbine 0.0 MW | Total BMPC Load 42.5 MW
Gross Pt Aconi 185.0 MW | Gross Tuft's Cove 0.0 MW | Gross Small Hydro 26.0 MW

Bus - VOLTAGE (KV/PU)
Branch - MW/MVAR
Equipment - MW/MVAR
110.0%RATEA
1.050OV 0.950UV
KV: <=25.000 <=69.000 <=138.000 <=230.000 <=345.000 >345.000

Figure ___

NSX -1.8 MW

CBX 480.6 MW

ONI 581.4 MW

ONS 576.4 MW

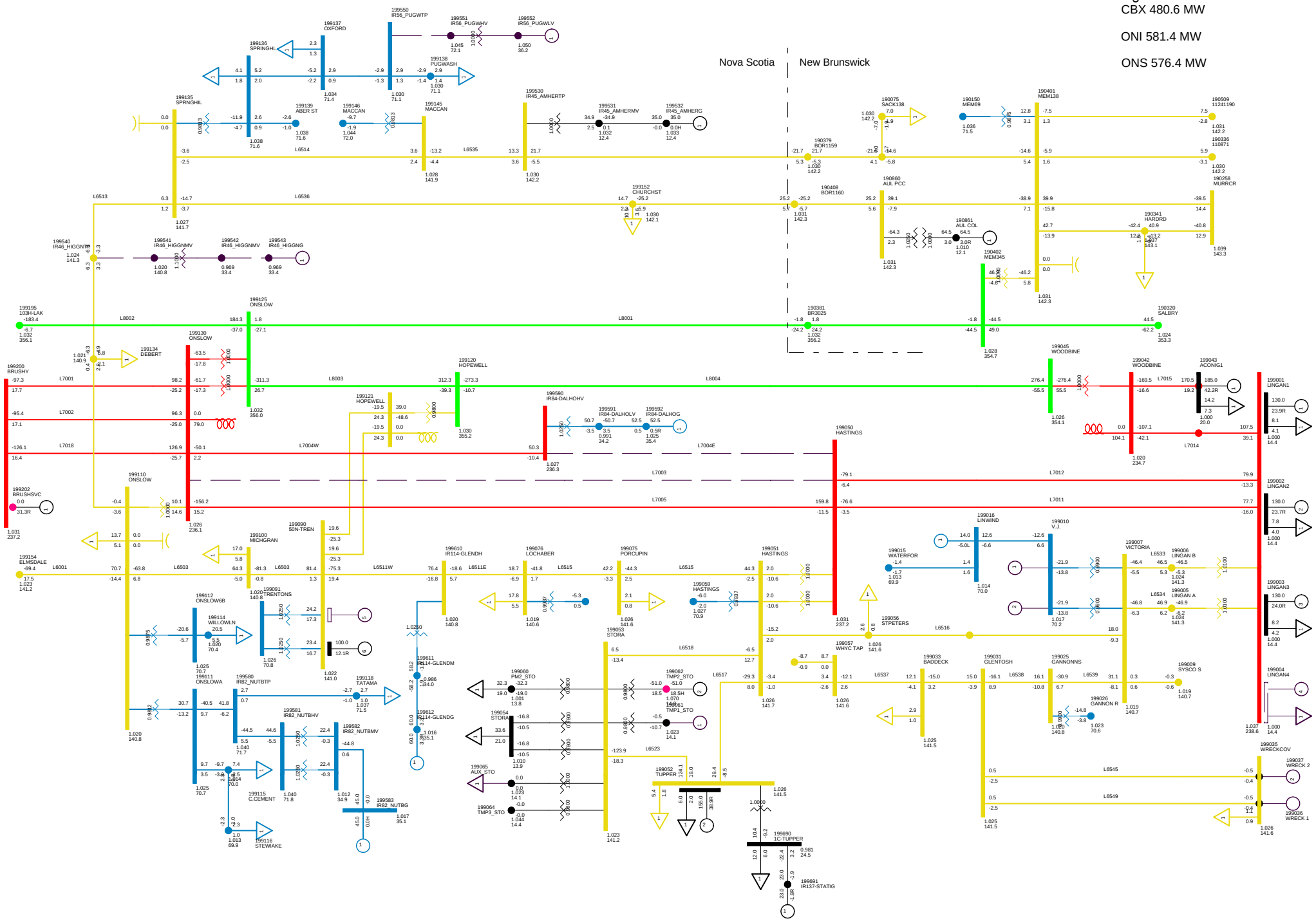

2013 LIGHT LOAD NS-NB=0
C60 DCT ON L7003+L7004
NORTHEASTERN NS TUE, DEC 09 2008 21:50

Total Wind Gen: 290.1 MW
Gross Lingan 390.0 MW
Gross Pt Aconi 185.0 MW
Gross Tupper 155.0 MW
Gross Trenton 100.0 MW
Gross Tuft's Cove 0.0 MW
Gross Wreck Cove 0.0 MW
Gross Gas Turbine 0.0 MW
Gross Small Hydro 26.0 MW
Net Stora Load 117.4 MW
Total BMPC Load 42.5 MW

Bus - VOLTAGE (KV/PU)
Branch - MW/MVAR
Equipment - MW/MVAR
110.0%RATEA
1.050OV 0.950UV
KV: <=25.000 <=69.000 <=138.000 <=230.000 <=345.000 >345.000

Figure ___

NSX 32.7 MW

CBX 467.4 MW

ONI 551.6 MW

ONS 577.4 MW

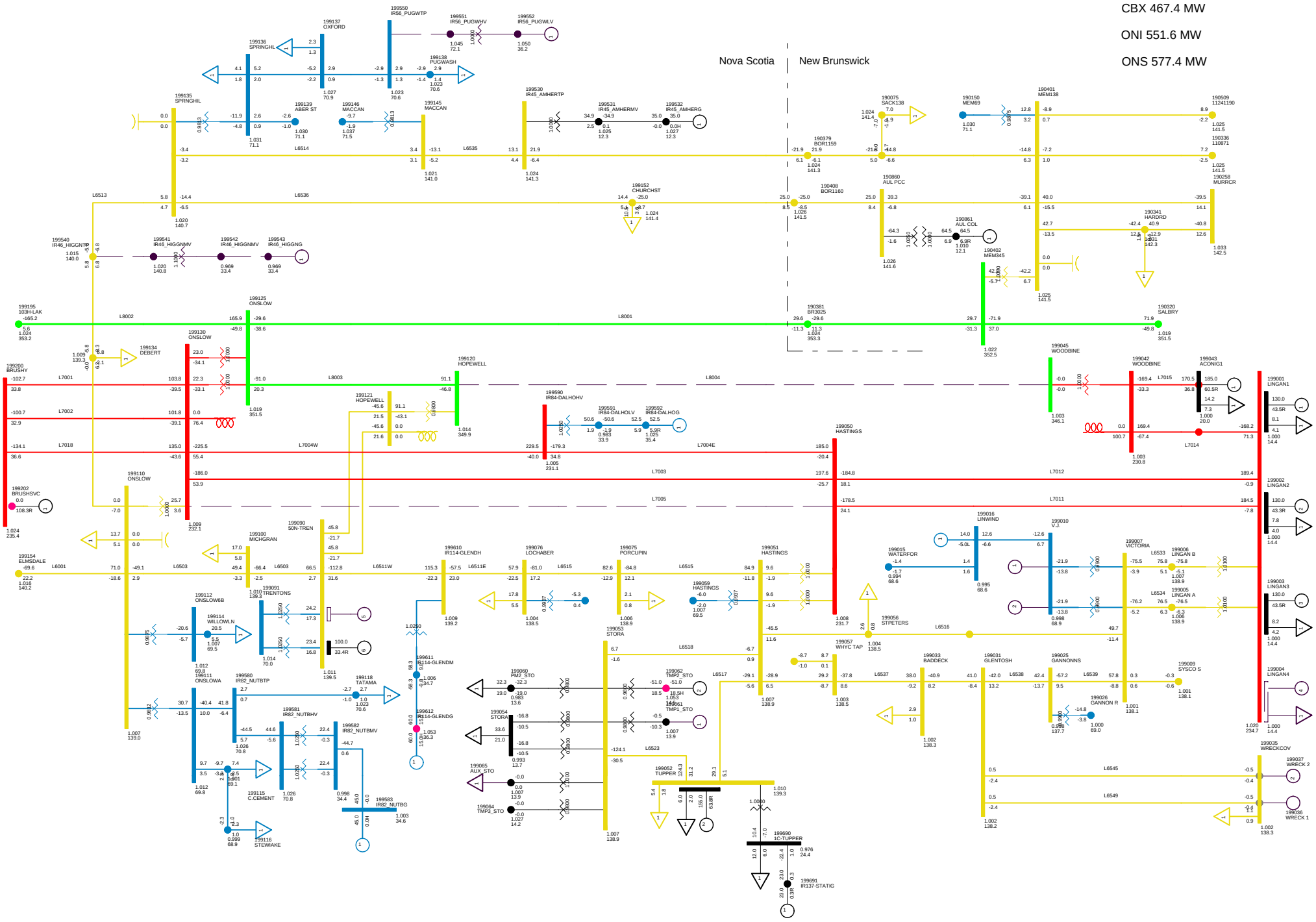

2013 LIGHT LOAD NS-NB=0
C61 DCT ON STRAIT CROSSING LOSE L8004-L7005 NO SPS
NORTHEASTERN NS TUE, DEC 09 2008 21:51

Total Wind Gen: 290.1 MW
Gross Lingan 390.0 MW
Gross Pt Aconi 185.0 MW
Gross Tupper 155.0 MW
Gross Trenton 100.0 MW
Gross Tuft's Cove 0.0 MW
Gross Wreck Cove 0.0 MW
Gross Gas Turbine 0.0 MW
Gross Small Hydro 26.0 MW
Net Stora Load 117.4 MW
Total BMPC Load 42.5 MW

Bus - VOLTAGE (KV/PU)
Branch - MW/MVAR
Equipment - MW/MVAR
110.0%RATEA
1.050OV 0.950UV
KV: <=25.000 <=69.000 <=138.000 <=230.000 <=345.000 >345.000

Figure ___

NSX -115.5 MW

CBX 362.2 MW

ONI 467.7 MW

ONS 576.2 MW

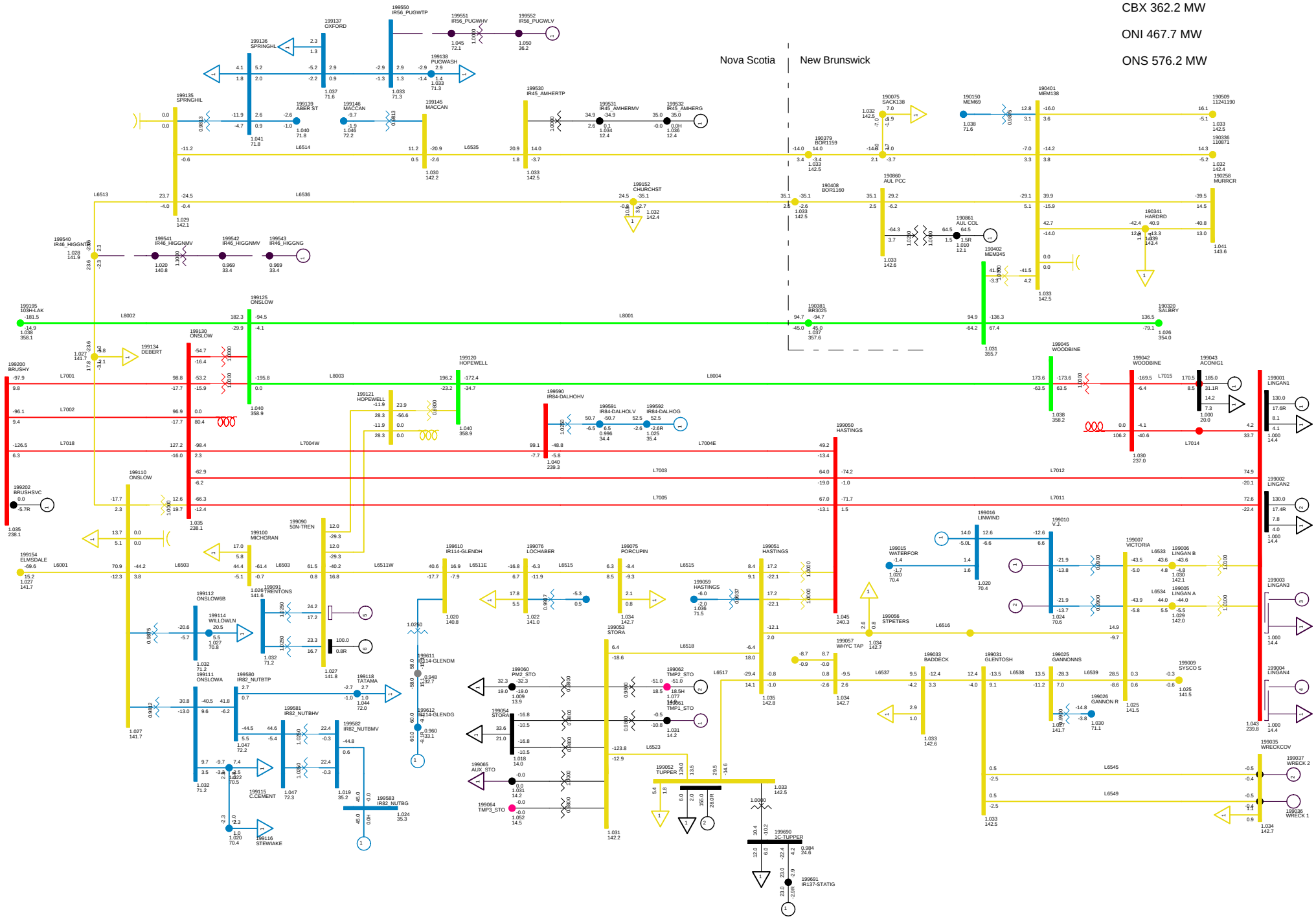

2013 LIGHT LOAD NS-NB=0
C62 FAULT ON BREAKER 88S-721 TRIPS LINGAN 3 AND 4
NORTHEASTERN NS TUE, DEC 09 2008 21:51

Total Wind Gen: 290.1 MW | Gross Tupper 155.0 MW | Gross Wreck Cove 0.0 MW | Net Stora Load 117.4 MW
Gross Lingan 260.0 MW | Gross Trenton 100.0 MW | Gross Gas Turbine 0.0 MW | Total BMPC Load 42.5 MW
Gross Pt Aconi 185.0 MW | Gross Tuft's Cove 0.0 MW | Gross Small Hydro 26.0 MW

Bus - VOLTAGE (KV/PU)
Branch - MW/MVAR
Equipment - MW/MVAR
110.0%RATEA
1.050OV 0.950UV
KV: <=25.000 <=69.000 <=138.000 <=230.000 <=345.000 >345.000

Figure ___

NSX -0.9 MW

CBX 479.7 MW

ONI 582.1 MW

ONS 576.2 MW

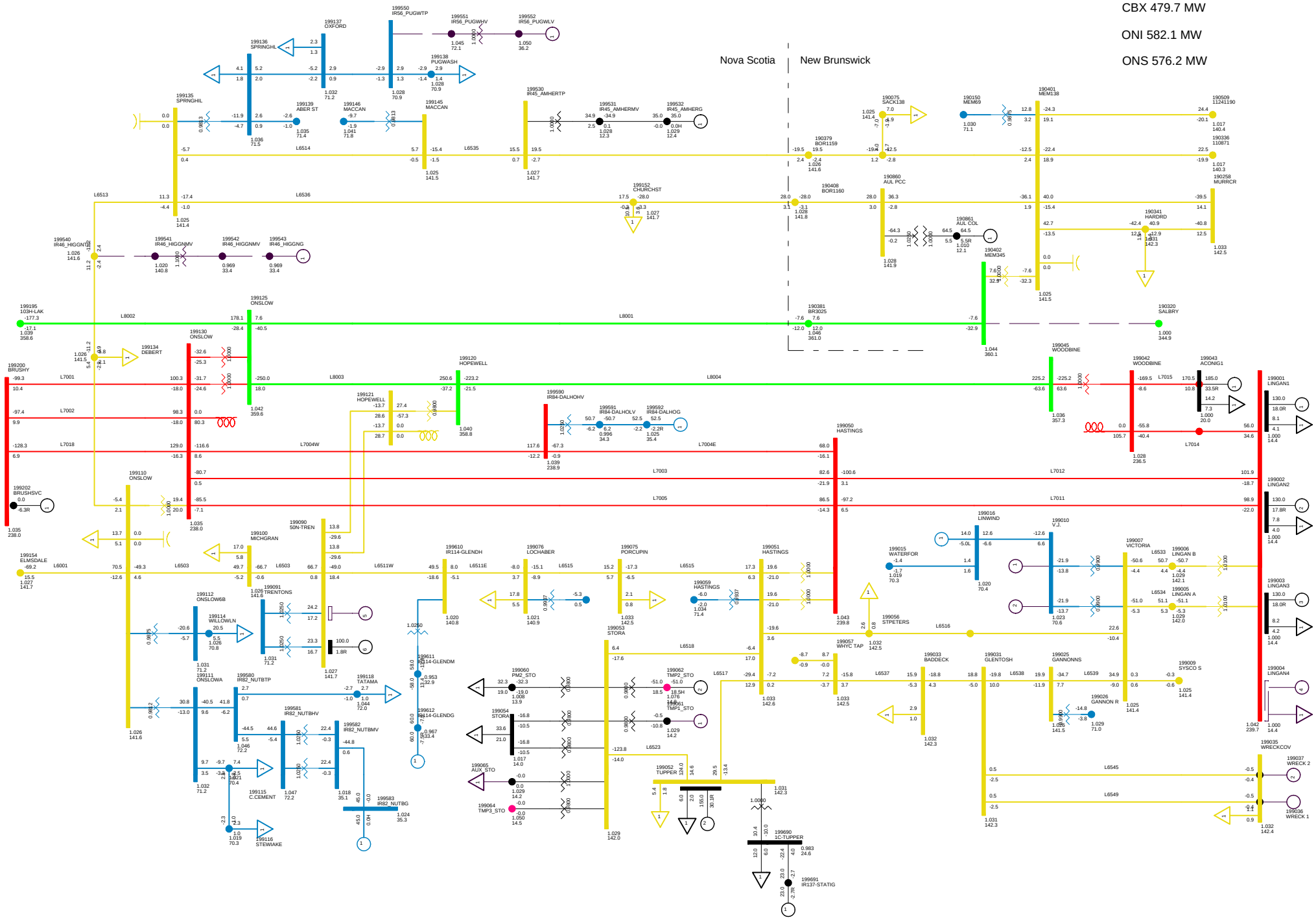

2013 LIGHT LOAD NS-NB=0
C63 FAULT ON SALISBURY SA3-2 TRIPS L3006 AND L3017
NORTHEASTERN NS TUE, DEC 09 2008 21:51

Total Wind Gen: 290.1 MW | Gross Tupper 155.0 MW | Gross Wreck Cove 0.0 MW | Net Stora Load 117.4 MW
Gross Lingan 390.0 MW | Gross Trenton 100.0 MW | Gross Gas Turbine 0.0 MW | Total BMPC Load 42.5 MW
Gross Pt Aconi 185.0 MW | Gross Tuft's Cove 0.0 MW | Gross Small Hydro 26.0 MW

Bus - VOLTAGE (KV/PU)
Branch - MW/MVAR
Equipment - MW/MVAR
110.0%RATEA
1.050OV 0.950UV
KV: <=25.000 <=69.000 <=138.000 <=230.000 <=345.000 >345.000

Figure ___

NSX -0.9 MW

CBX 479.6 MW

ONI 582.1 MW

ONS 576.2 MW

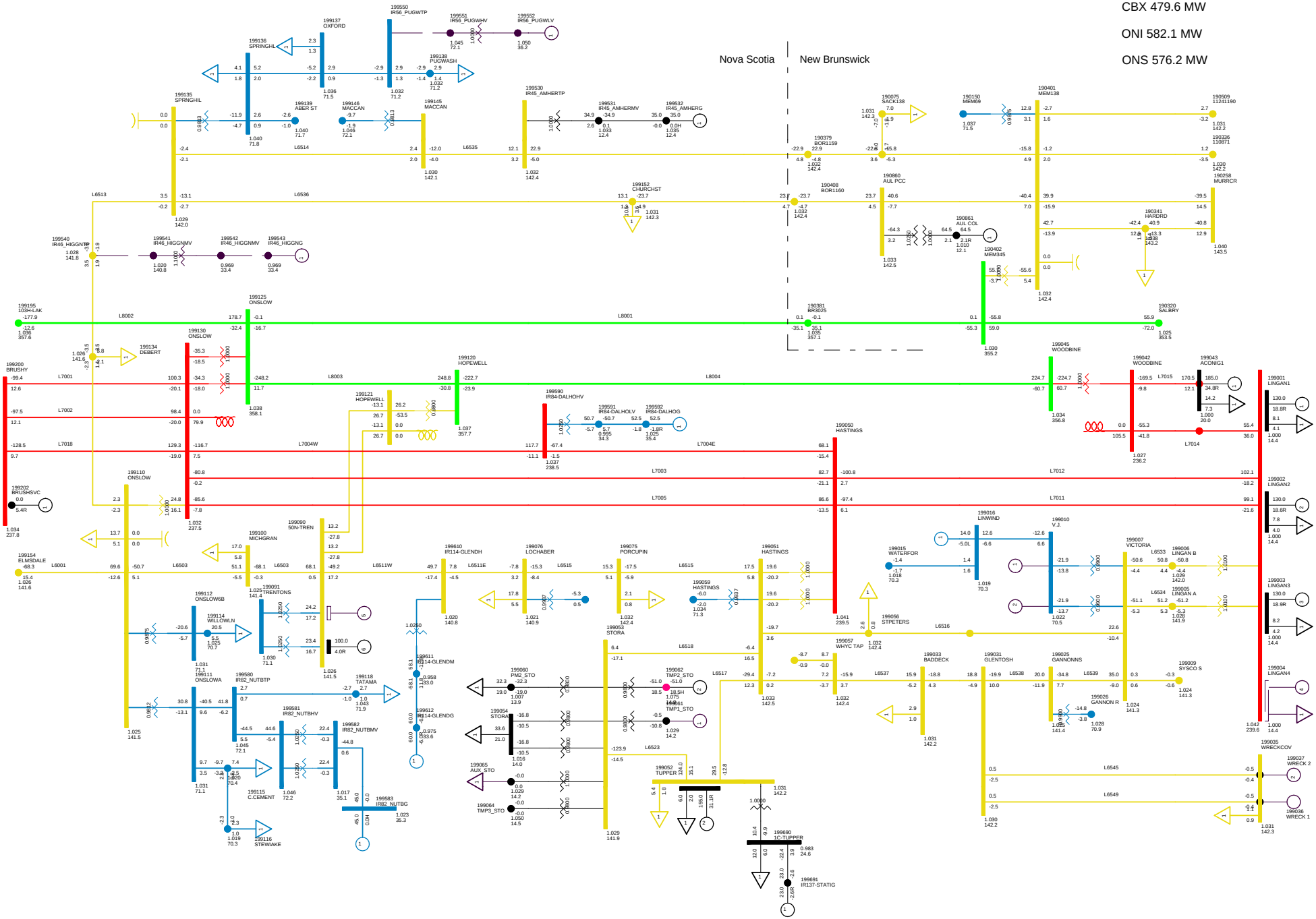

2013 LIGHT LOAD NS-NB=0
C64 FAULT ON BREAKER SALISBURY BREAKER SA3-4 TRIPS L3013 AND
NORTHEASTERN NS TUE, DEC 09 2008 21:51

Total Wind Gen: 290.1 MW | Gross Tupper 155.0 MW | Gross Wreck Cove 0.0 MW | Net Stora Load 117.4 MW
Gross Lingan 390.0 MW | Gross Trenton 100.0 MW | Gross Gas Turbine 0.0 MW | Total BMPC Load 42.5 MW
Gross Pt Aconi 185.0 MW | Gross Tuft's Cove 0.0 MW | Gross Small Hydro 26.0 MW

Bus - VOLTAGE (KV/PU)
Branch - MW/MVAR
Equipment - MW/MVAR
110.0%RATEA
1.050OV 0.950UV
KV: <=25.000 <=69.000 <=138.000 <=230.000 <=345.000 >345.000

Figure ___

NSX 0.7 MW

CBX 580.2 MW

ONI 583.9 MW

ONS 576.5 MW

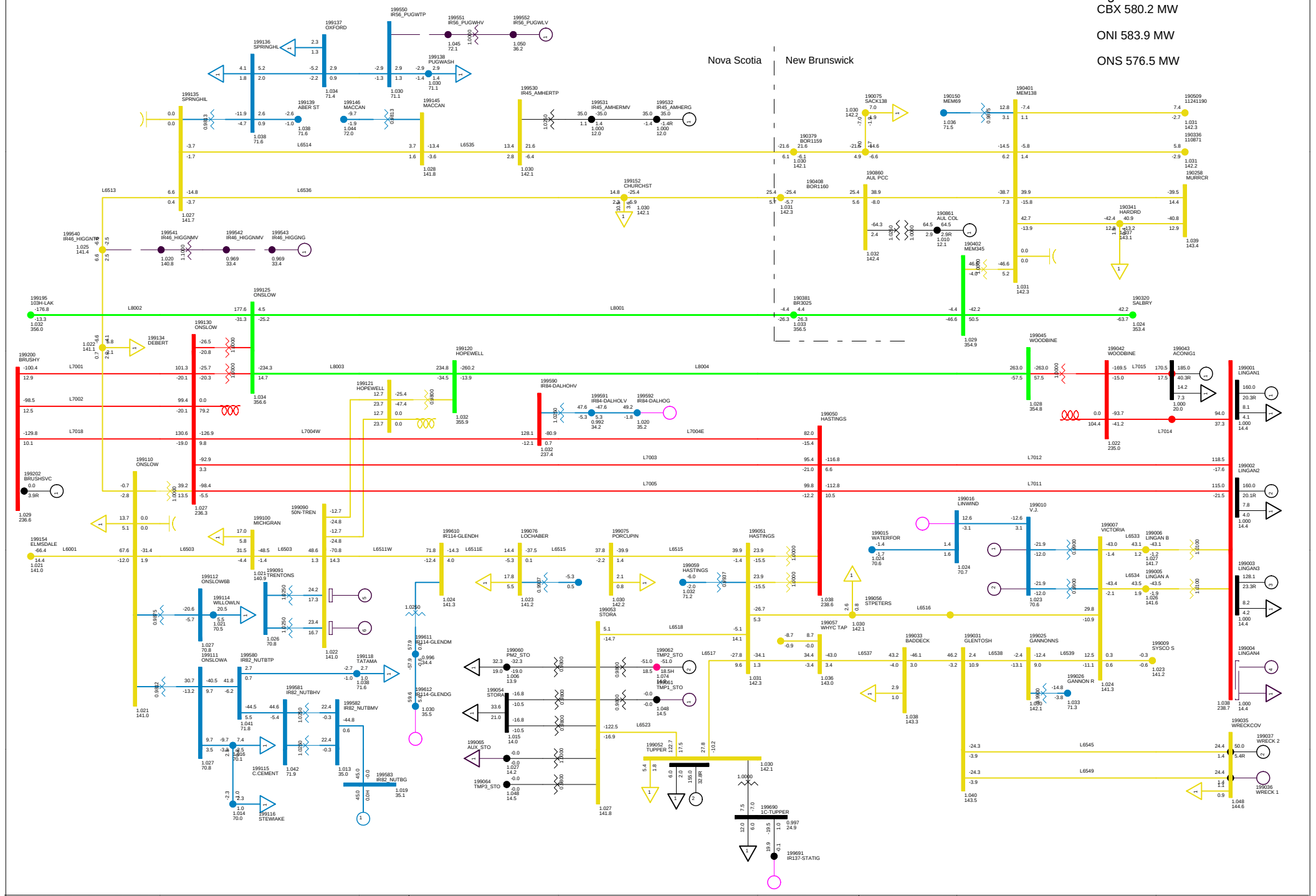

2010 LIGHT, NSLOAD=1150
NS-NB=0; NB-NE=0; CBX=580; ONI=583 ONS=576
NORTHEASTERN NS TUE, DEC 09 2008 22:20

Total Wind Gen: 140.6 MW | Gross Tupper 155.0 MW | Gross Wreck Cove 50.0 MW | Net Stora Load 117.4 MW
Gross Lingan 448.1 MW | Gross Trenton 0.0 MW | Gross Gas Turbine 0.0 MW | Total BMPC Load 42.5 MW
Gross Pt Aconi 185.0 MW | Gross Tuft's Cove 0.0 MW | Gross Small Hydro 25.0 MW

Bus - VOLTAGE (KV/PU)
Branch - MW/MVAR
Equipment - MW/MVAR
110.0%RATEA
1.0500V 0.950UV
KV: <=25.000 <=69.000 <=138.000 <=230.000 <=345.000 >345.000

Figure ___

NSX 0.7 MW

CBX 580.2 MW

ONI 583.9 MW

ONS 576.5 MW

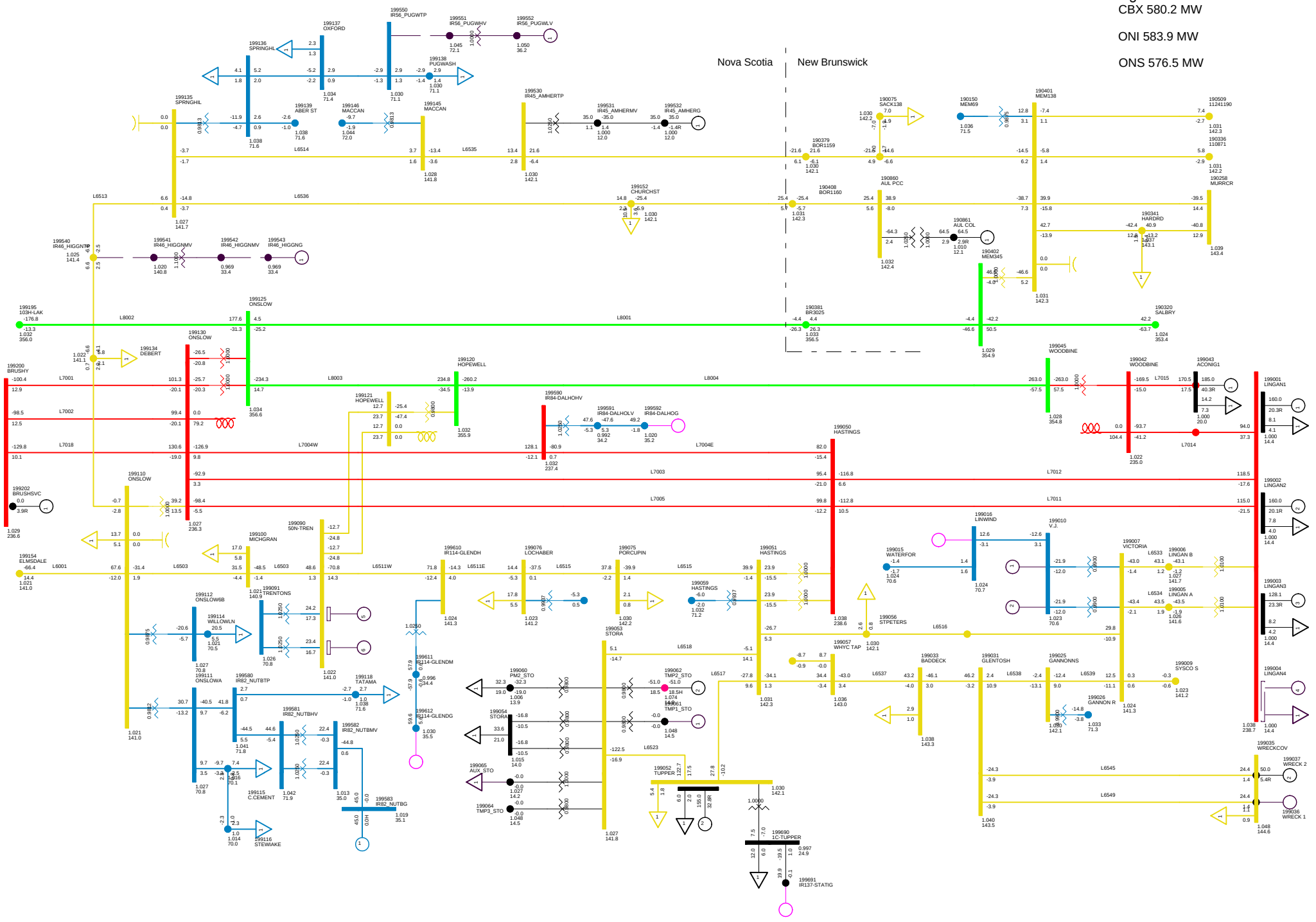

2010 LIGHT, NSLOAD=1150
NS-NB=0; NB-NE=0; CBX=580; ONI=583 ONS=576
NORTHEASTERN NS TUE, DEC 09 2008 22:20

Total Wind Gen: 140.6 MW
Gross Lingan 448.1 MW
Gross Pt Aconi 185.0 MW
Gross Tupper 155.0 MW
Gross Trenton 0.0 MW
Gross Tuft's Cove 0.0 MW
Gross Wreck Cove 50.0 MW
Gross Gas Turbine 0.0 MW
Gross Small Hydro 25.0 MW
Net Stora Load 117.4 MW
Total BMPC Load 42.5 MW

Bus - VOLTAGE (KV/PU)
Branch - MW/MVAR
Equipment - MW/MVAR
110.0%RATEA
1.0500V 0.950UV
KV: <=25.000 <=69.000 <=138.000 <=230.000 <=345.000 >345.000

Figure ___

NSX -29.6 MW

CBX 564.2 MW

ONI 555.1 MW

ONS 577.8 MW

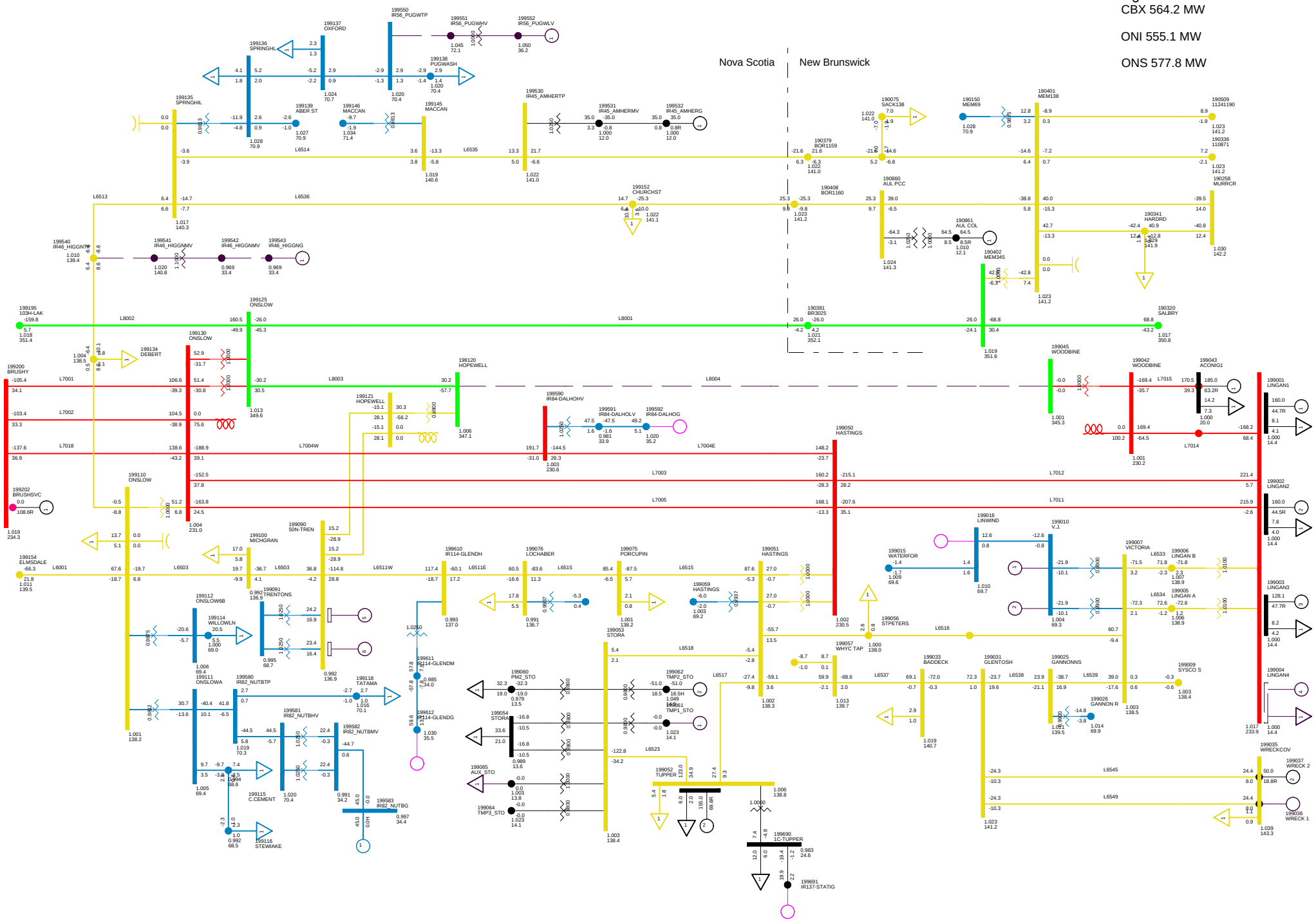

2013 LIGHT LOAD - NO TRENTON
C01 LOSE L8004 NO SPS
NORTHEASTERN NS TUE, DEC 09 2008 22:20

Total Wind Gen: 140.6 MW
Gross Lingan 448.1 MW
Gross Pt Aconi 185.0 MW
Gross Tupper 155.0 MW
Gross Trenton 0.0 MW
Gross Tuft's Cove 0.0 MW
Gross Wreck Cove 50.0 MW
Gross Gas Turbine 0.0 MW
Gross Small Hydro 25.0 MW
Net Stora Load 117.4 MW
Total BMPC Load 42.5 MW

Bus - VOLTAGE (KV/PU)
Branch - MW/MVAR
Equipment - MW/MVAR
110.0%RATEA
1.050OV 0.950UV
KV: <=25.000 <=69.000 <=138.000 <=230.000 <=345.000 >345.000

Figure ___

NSX -12.4 MW

CBX 575.6 MW

ONI 572.0 MW

ONS 577.6 MW

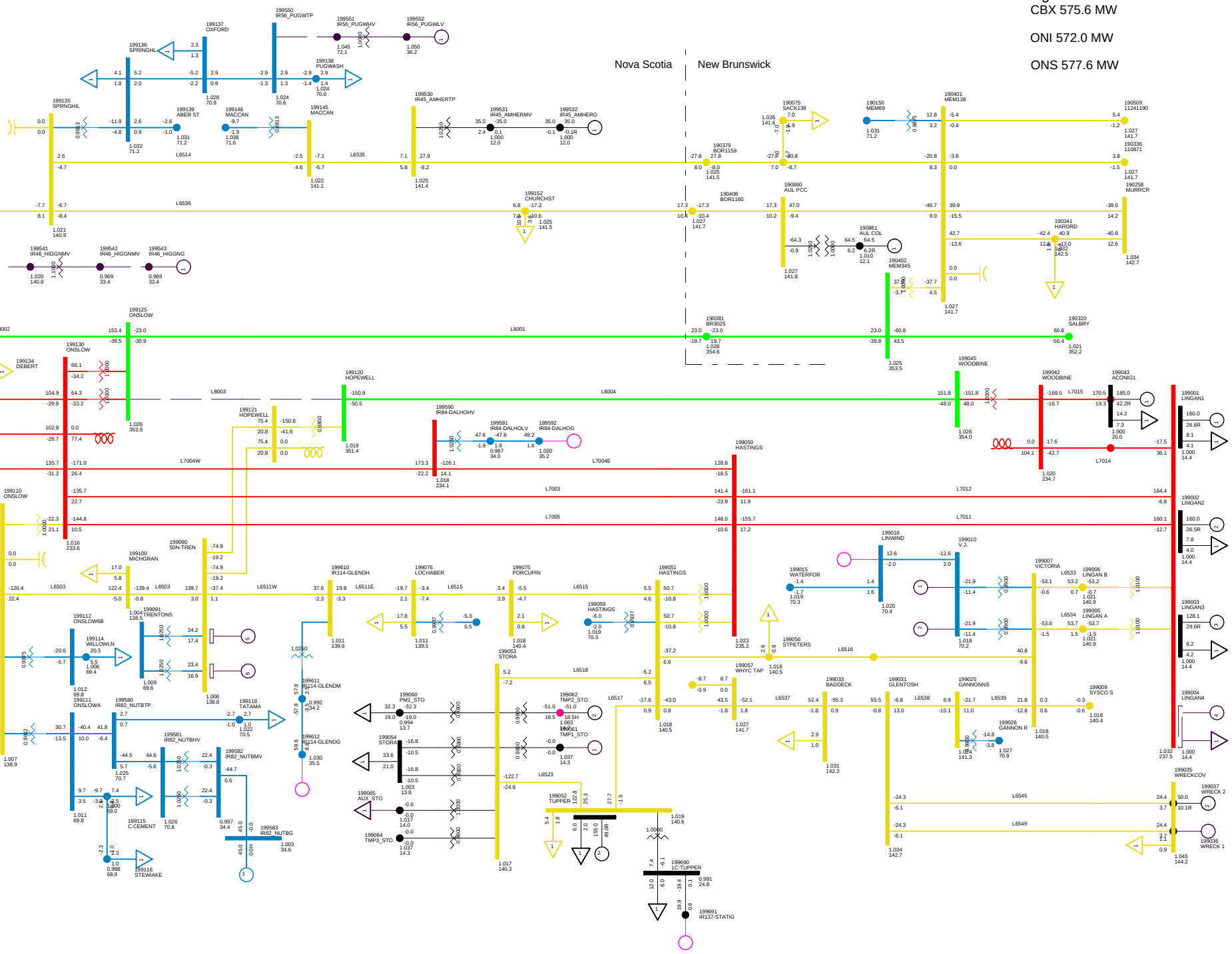

2013 LIGHT LOAD - NO TRENTON
C02 LOSE L8003 NO SPS
NORTHEASTERN NS TUE, DEC 09 2008 22:20

Total Wind Gen: 140.6 MW
Gross Lingan 448.1 MW
Gross Pt Aconi 185.0 MW
Gross Tupper 155.0 MW
Gross Trenton 0.0 MW
Gross Tuft's Cove 0.0 MW
Gross Wreck Cove 50.0 MW
Gross Gas Turbine 0.0 MW
Gross Small Hydro 25.0 MW
Stora Load 117.4 MW
Total BMPC Load 42.5 MW

Bus - VOLTAGE (KV/PU)
Branch - MW/MVAR
Equipment - MW/MVAR
110.0%RATEA
1.050OV 0.950UV
KV: <=25.000 <=69.000 <=138.000 <=230.000 <=345.000 >345.000

Figure ___

NSX -5.8 MW

CBX 579.9 MW

ONI 583.3 MW

ONS 582.1 MW

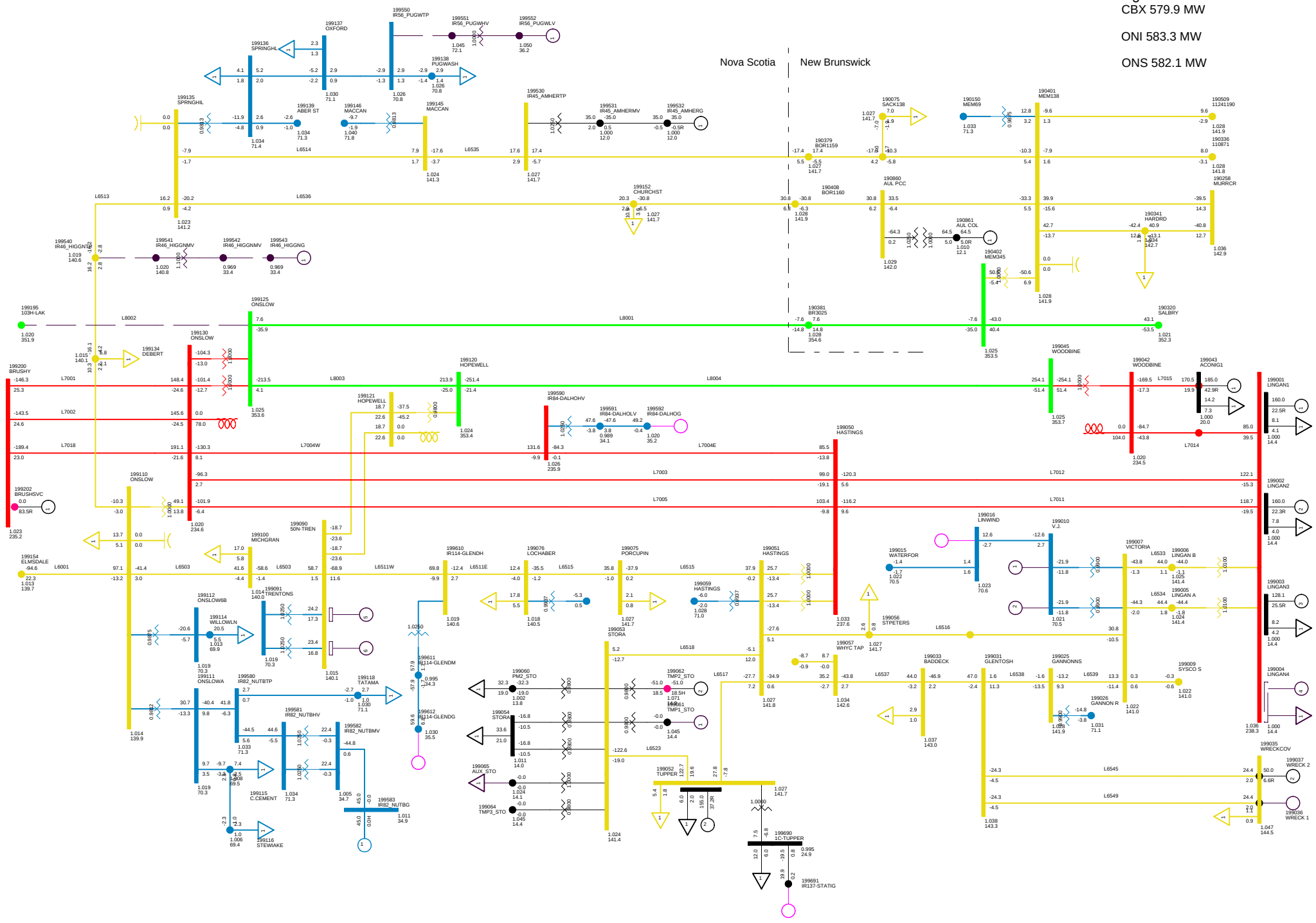

2013 LIGHT LOAD - NO TRENTON
C03 LOSE L8002
NORTHEASTERN NS TUE, DEC 09 2008 22:20

Total Wind Gen: 140.6 MW
Gross Lingan 448.1 MW
Gross Pt Aconi 185.0 MW
Gross Tupper 155.0 MW
Gross Trenton 0.0 MW
Gross Tuft's Cove 0.0 MW
Gross Wreck Cove 50.0 MW
Gross Gas Turbine 0.0 MW
Gross Small Hydro 25.0 MW
Net Stora Load 117.4 MW
Total BMPC Load 42.5 MW

Bus - VOLTAGE (KV/PU)
Branch - MW/MVAR
Equipment - MW/MVAR
110.0%RATEA
1.050OV 0.950UV
KV: <=25.000 <=69.000 <=138.000 <=230.000 <=345.000 >345.000

Figure ___

NSX 0.5 MW

CBX 580.2 MW

ONI 583.8 MW

ONS 576.6 MW

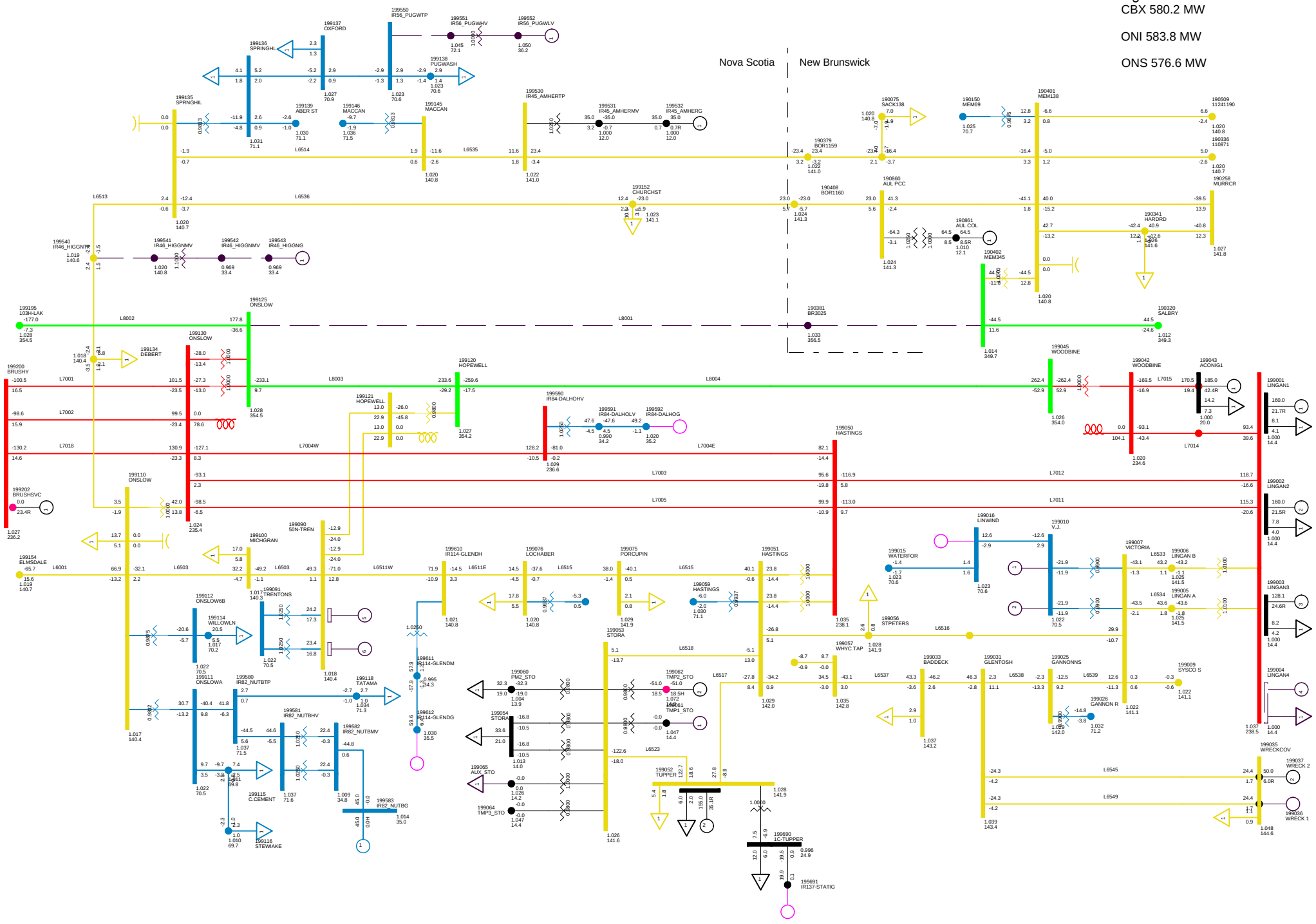

2013 LIGHT LOAD - NO TRENTON
C04 LOSE L8001 NO SPS
NORTHEASTERN NS TUE, DEC 09 2008 22:20

Total Wind Gen: 140.6 MW
Gross Lingan 448.1 MW
Gross Pt Aconi 185.0 MW
Gross Tupper 155.0 MW
Gross Trenton 0.0 MW
Gross Tuft's Cove 0.0 MW
Gross Wreck Cove 50.0 MW
Gross Gas Turbine 0.0 MW
Gross Small Hydro 25.0 MW
Net Stora Load 117.4 MW
Total BMPC Load 42.5 MW

Bus - VOLTAGE (KV/PU)
Branch - MW/MVAR
Equipment - MW/MVAR
110.0%RATEA
1.050UV 0.950UV
KV: <=25.000 <=69.000 <=138.000 <=230.000 <=345.000 >345.000

Figure ___

NSX 0.7 MW

CBX 580.2 MW

ONI 583.9 MW

ONS 576.5 MW

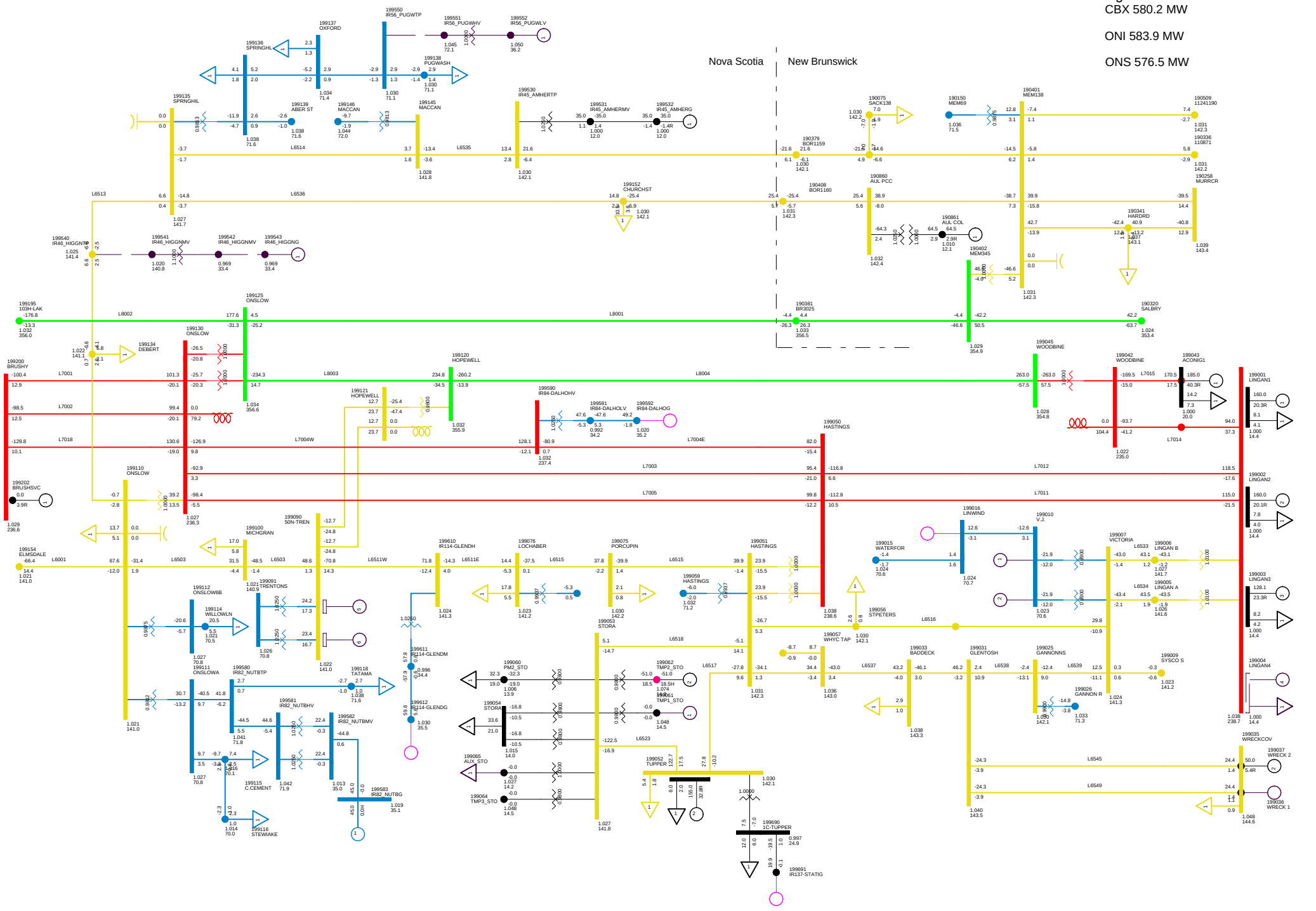

2010 LIGHT, NSLOAD=1150
NS-NB=0; NB-NE=0; CBX=580; ONI=583 ONS=576
NORTHEASTERN NS TUE, DEC 09 2008 22:21

Total Wind Gen: 140.6 MW
Gross Lingan 448.1 MW
Gross Pt Aconi 185.0 MW
Gross Tupper 155.0 MW
Gross Trenton 0.0 MW
Gross Tuft's Cove 0.0 MW
Gross Wreck Cove 50.0 MW
Gross Gas Turbine 0.0 MW
Gross Small Hydro 25.0 MW
Net Stora Load 117.4 MW
Total BMPC Load 42.5 MW

Bus - VOLTAGE (KV/PU)
Branch - MW/MVAR
Equipment - MW/MVAR
110.0%RATEA
1.050UV 0.950UV
KV: <=25.000 <=69.000 <=138.000 <=230.000 <=345.000 >345.000

Figure ___

NSX -1.8 MW

CBX 577.4 MW

ONI 581.5 MW

ONS 576.5 MW

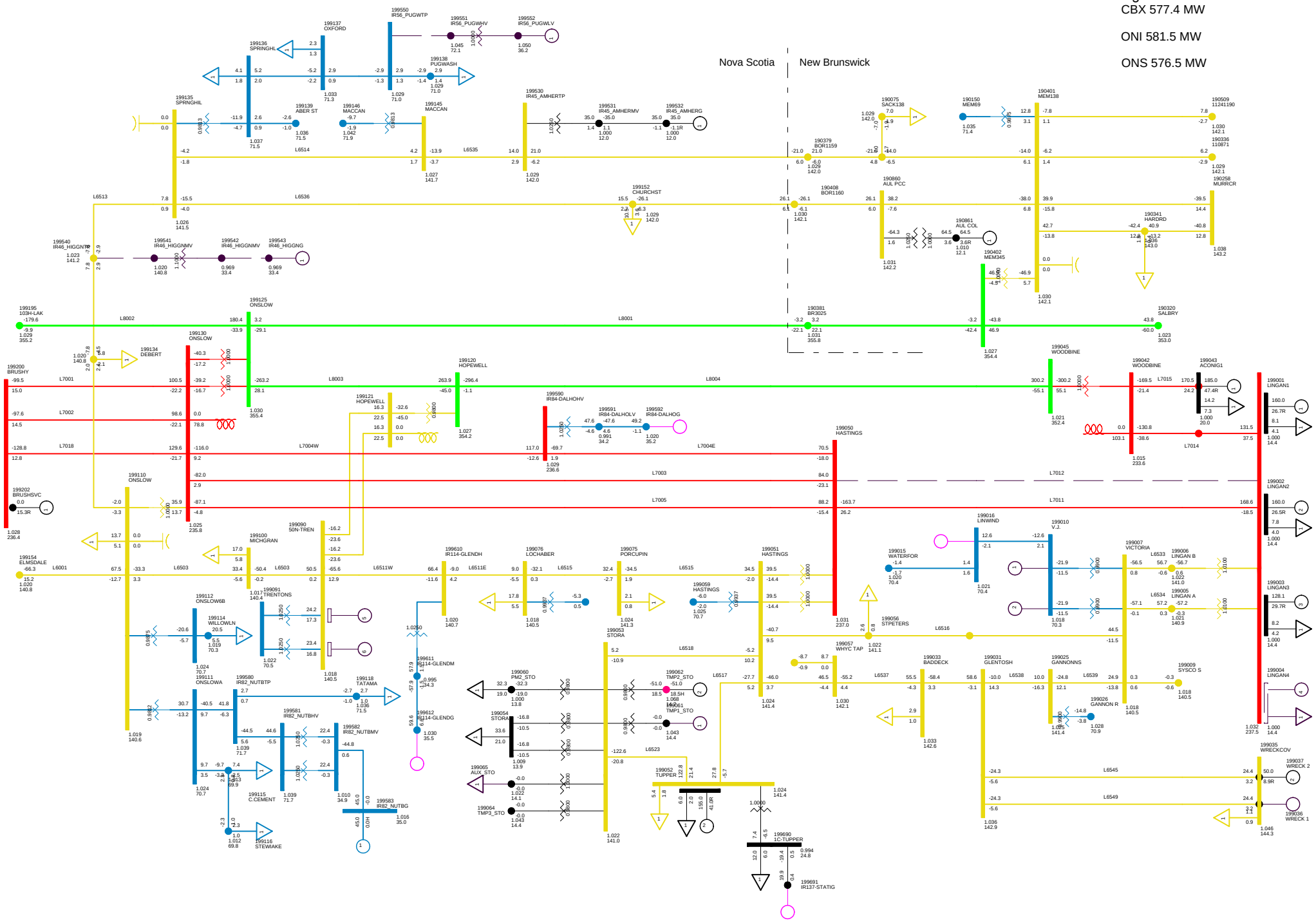

2013 LIGHT LOAD - NO TRENTON
C05 LOSE L7012 NO SPS
NORTHEASTERN NS TUE, DEC 09 2008 22:21

Total Wind Gen: 140.6 MW
Gross Lingan 448.1 MW
Gross Pt Aconi 185.0 MW
Gross Tupper 155.0 MW
Gross Trenton 0.0 MW
Gross Tuft's Cove 0.0 MW
Gross Wreck Cove 50.0 MW
Gross Gas Turbine 0.0 MW
Gross Small Hydro 25.0 MW
Total Stora Load 117.4 MW
Total BMPC Load 42.5 MW

Bus - VOLTAGE (KV/PU)
Branch - MW/MVAR
Equipment - MW/MVAR
110.0%RATEA
1.050UV 0.950UV
KV: <=25.000 <=69.000 <=138.000 <=230.000 <=345.000 >345.000

Figure ___

NSX -0.5 MW

CBX 578.7 MW

ONI 582.8 MW

ONS 576.5 MW

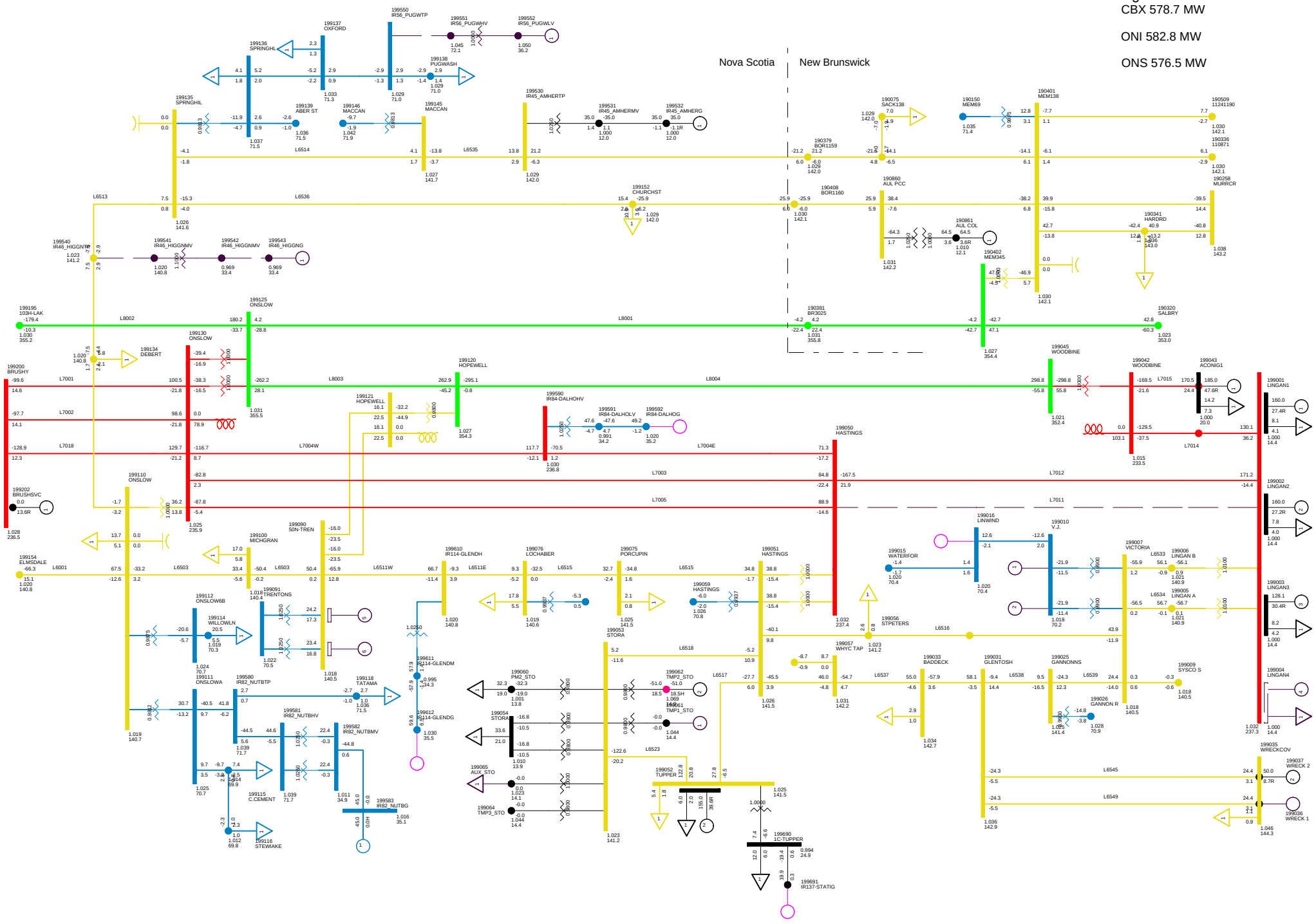

2013 LIGHT LOAD - NO TRENTON
C06 LOSE L7011
NORTHEASTERN NS TUE, DEC 09 2008 22:21

Total Wind Gen: 140.6 MW
Gross Lingan 448.1 MW
Gross Pt Aconi 185.0 MW
Gross Tupper 155.0 MW
Gross Trenton 0.0 MW
Gross Tuft's Cove 0.0 MW
Gross Wreck Cove 50.0 MW
Gross Gas Turbine 0.0 MW
Gross Small Hydro 25.0 MW
Net Stora Load 117.4 MW
Total BMPC Load 42.5 MW

Bus - VOLTAGE (KV/PU)
Branch - MW/MVAR
Equipment - MW/MVAR
110.0%RATEA
1.050UV 0.950UV
KV: <=25.000 <=69.000 <=138.000 <=230.000 <=345.000 >345.000

Figure ___

NSX -2.8 MW

CBX 580.7 MW

ONI 580.7 MW

ONS 576.7 MW

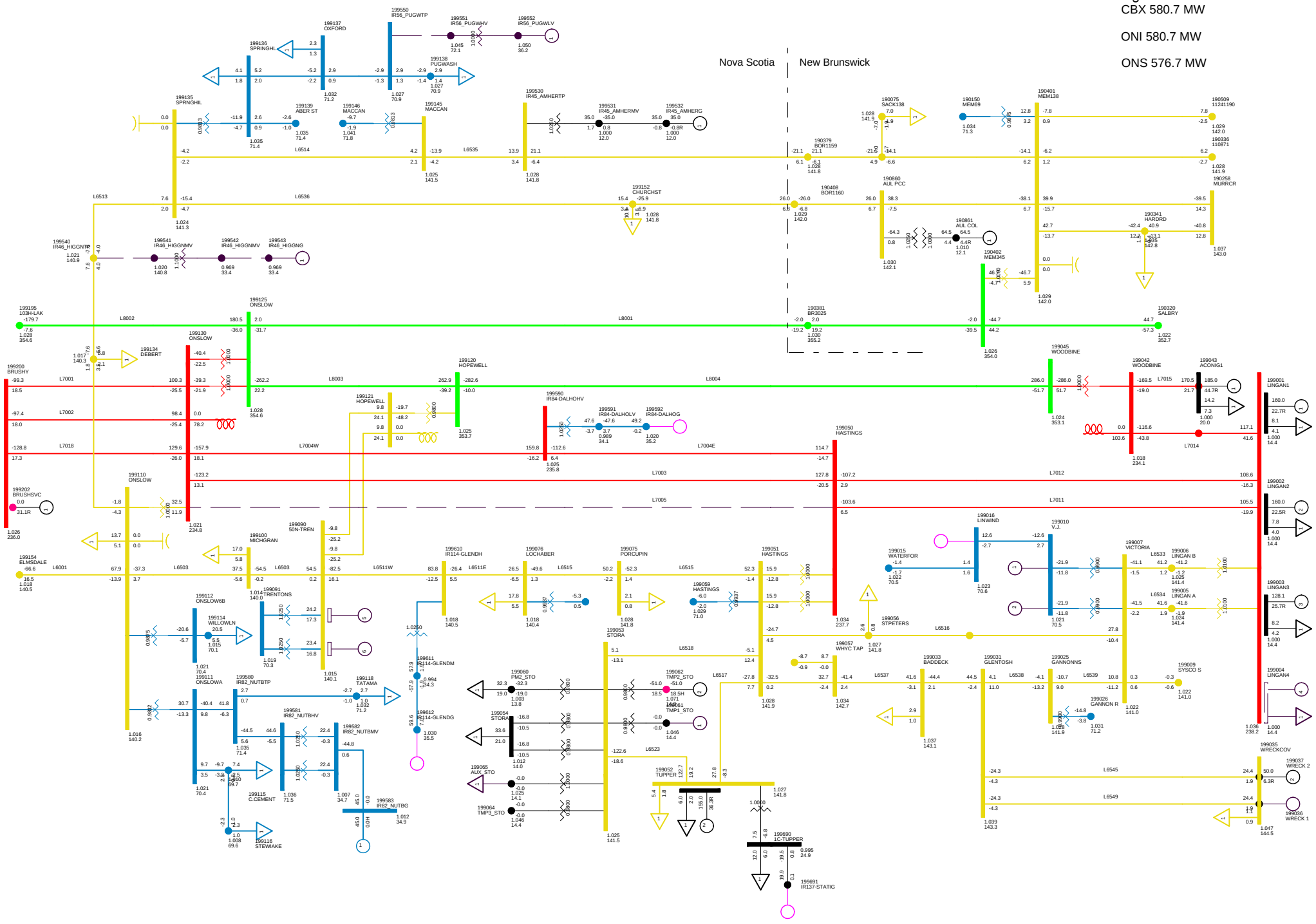

2013 LIGHT LOAD - NO TRENTON
C07 LOSE L7005
NORTHEASTERN NS TUE, DEC 09 2008 22:21

Total Wind Gen: 140.6 MW
Gross Lingan 448.1 MW
Gross Pt Aconi 185.0 MW
Gross Tupper 155.0 MW
Gross Trenton 0.0 MW
Gross Tuft's Cove 0.0 MW
Gross Wreck Cove 50.0 MW
Gross Gas Turbine 0.0 MW
Gross Small Hydro 25.0 MW
Net Stora Load 117.4 MW
Total BMPC Load 42.5 MW

Bus - VOLTAGE (KV/PU)
Branch - MW/MVAR
Equipment - MW/MVAR
110.0%RATEA
1.050OV 0.950UV
KV: <=25.000 <=69.000 <=138.000 <=230.000 <=345.000 >345.000

Figure ___

NSX -1.5 MW

CBX 580.2 MW

ONI 583.9 MW

ONS 578.7 MW

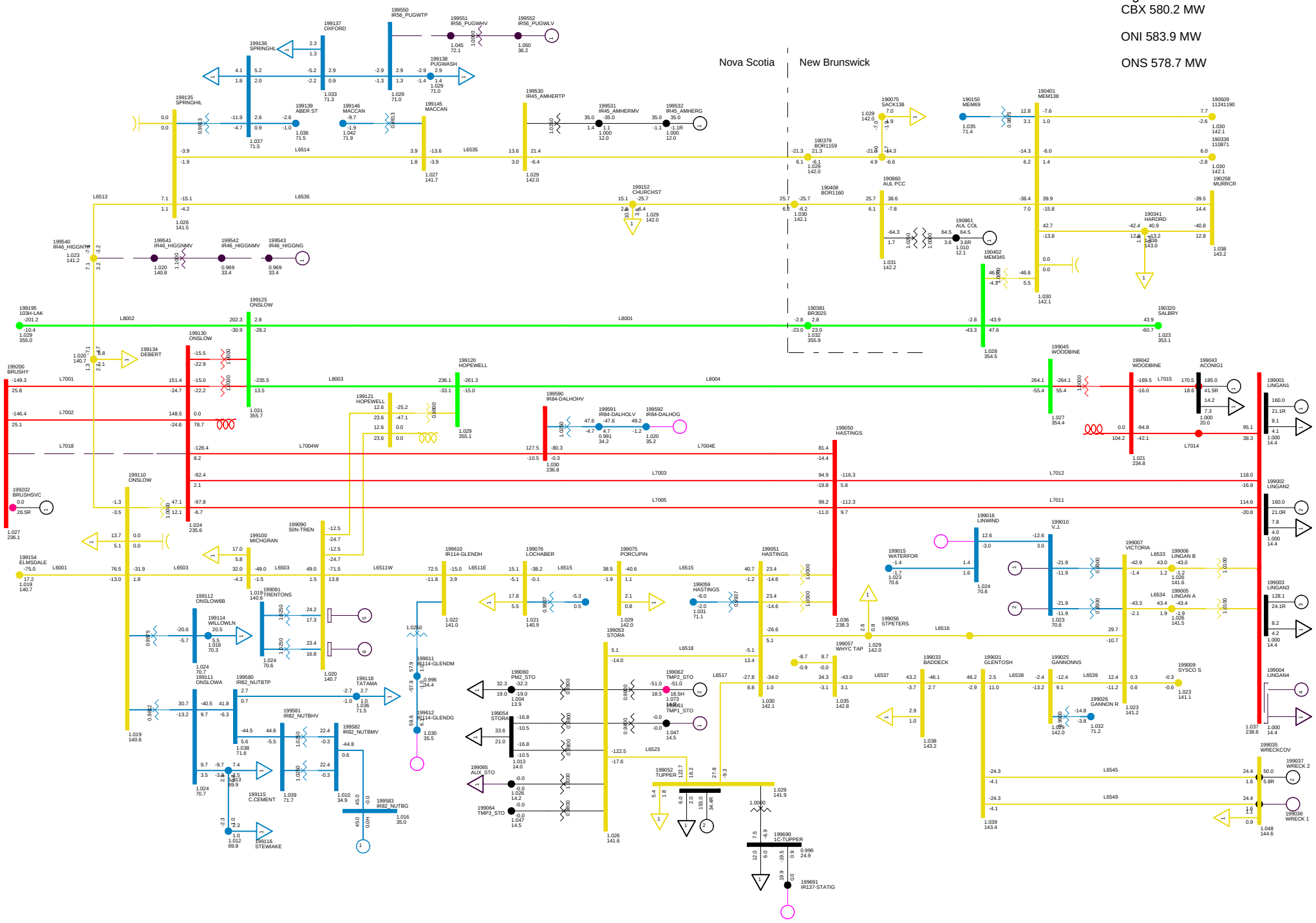

2013 LIGHT LOAD - NO TRENTON
C08 LOSE L7018
NORTHEASTERN NS TUE, DEC 09 2008 22:21

Total Wind Gen: 140.6 MW
Gross Lingan 448.1 MW
Gross Pt Aconi 185.0 MW
Gross Tupper 155.0 MW
Gross Trenton 0.0 MW
Gross Tuft's Cove 0.0 MW
Gross Wreck Cove 50.0 MW
Gross Gas Turbine 0.0 MW
Gross Small Hydro 25.0 MW
Net Stora Load 117.4 MW
Total BMPC Load 42.5 MW

Bus - VOLTAGE (KV/PU)
Branch - MW/MVAR
Equipment - MW/MVAR
110.0%RATEA
1.050OV 0.950UV
KV: <=25.000 <=69.000 <=138.000 <=230.000 <=345.000 >345.000

Figure ___

Total Wind Gen: 140.6 MW | Gross Tupper 155.0 MW | Gross Wreck Cove 50.0 MW

Gross Lingan 448.1 MW | Gross Trenton 0.0 MW | Gross Gas Turbine 0.0 MW

Gross Pt Aconi 185.0 MW | Gross Tuft's Cove 0.0 MW | Gross Small Hydro 25.0 MW

Net Stora Load 117.4 MW | Total BMPC Load 42.5 MW

NSX 0.5 MW

CBX 580.2 MW

ONI 583.9 MW

ONS 576.7 MW

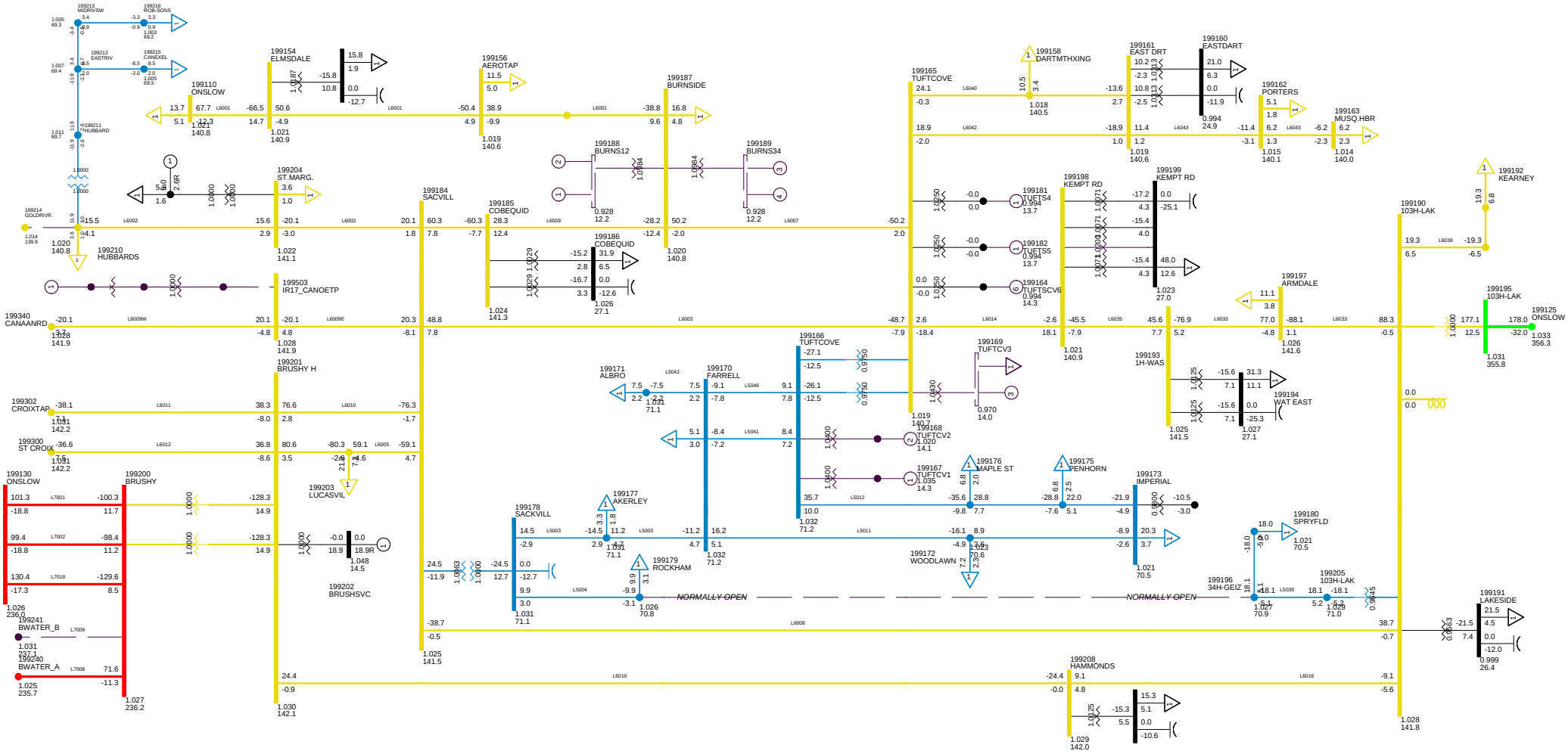

2013 LIGHT LOAD - NO TRENTON
C09 LOSE L7009
METRO ZONE TUE, DEC 09 2008 22:21

Bus - VOLTAGE (KV/PU)
Branch - MW/MVAR
Equipment - MW/MVAR
100.0%RATEA
1.050OV 0.950UV
KV: <=30.000 <=69.000 <=138.000 <=230.000 <=345.000 >345.000

Figure __

NSX -3.0 MW

CBX 580.9 MW

ONI 580.4 MW

ONS 576.6 MW

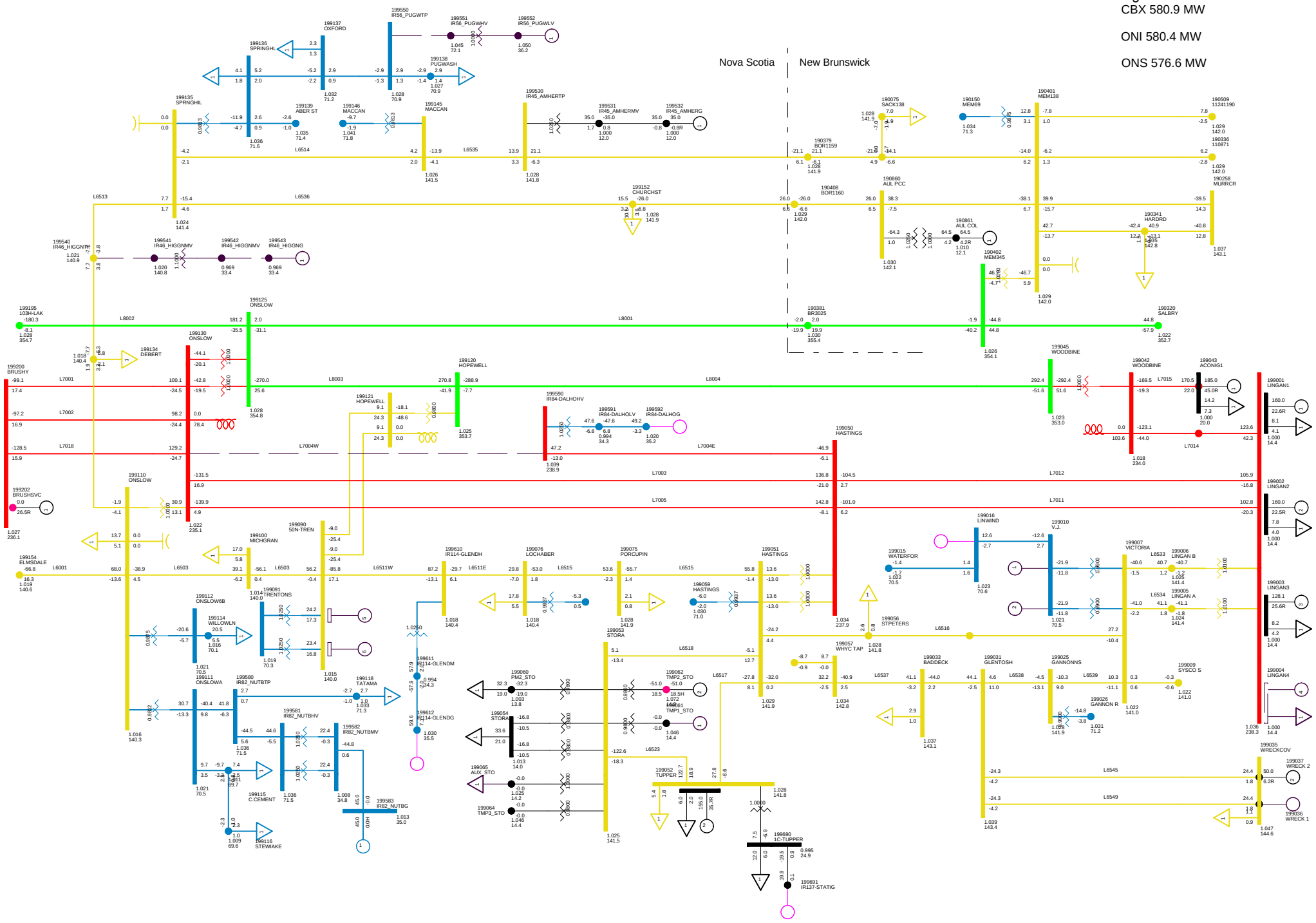

2013 LIGHT LOAD - NO TRENTON
C10 LOSE L7004 WEST
NORTHEASTERN NS TUE, DEC 09 2008 22:21

Total Wind Gen: 140.6 MW | Gross Tupper 155.0 MW | Gross Wreck Cove 50.0 MW | Net Stora Load 117.4 MW
Gross Lingan 448.1 MW | Gross Trenton 0.0 MW | Gross Gas Turbine 0.0 MW | Total BMPC Load 42.5 MW
Gross Pt Aconi 185.0 MW | Gross Tuft's Cove 0.0 MW | Gross Small Hydro 25.0 MW

Bus - VOLTAGE (KV/PU)
Branch - MW/MVAR
Equipment - MW/MVAR
110.0%RATEA
1.050UV 0.950UV
KV: <=25.000 <=69.000 <=138.000 <=230.000 <=345.000 >345.000

Figure ___

NSX -5.4 MW

CBX 576.8 MW

ONI 578.0 MW

ONS 576.7 MW

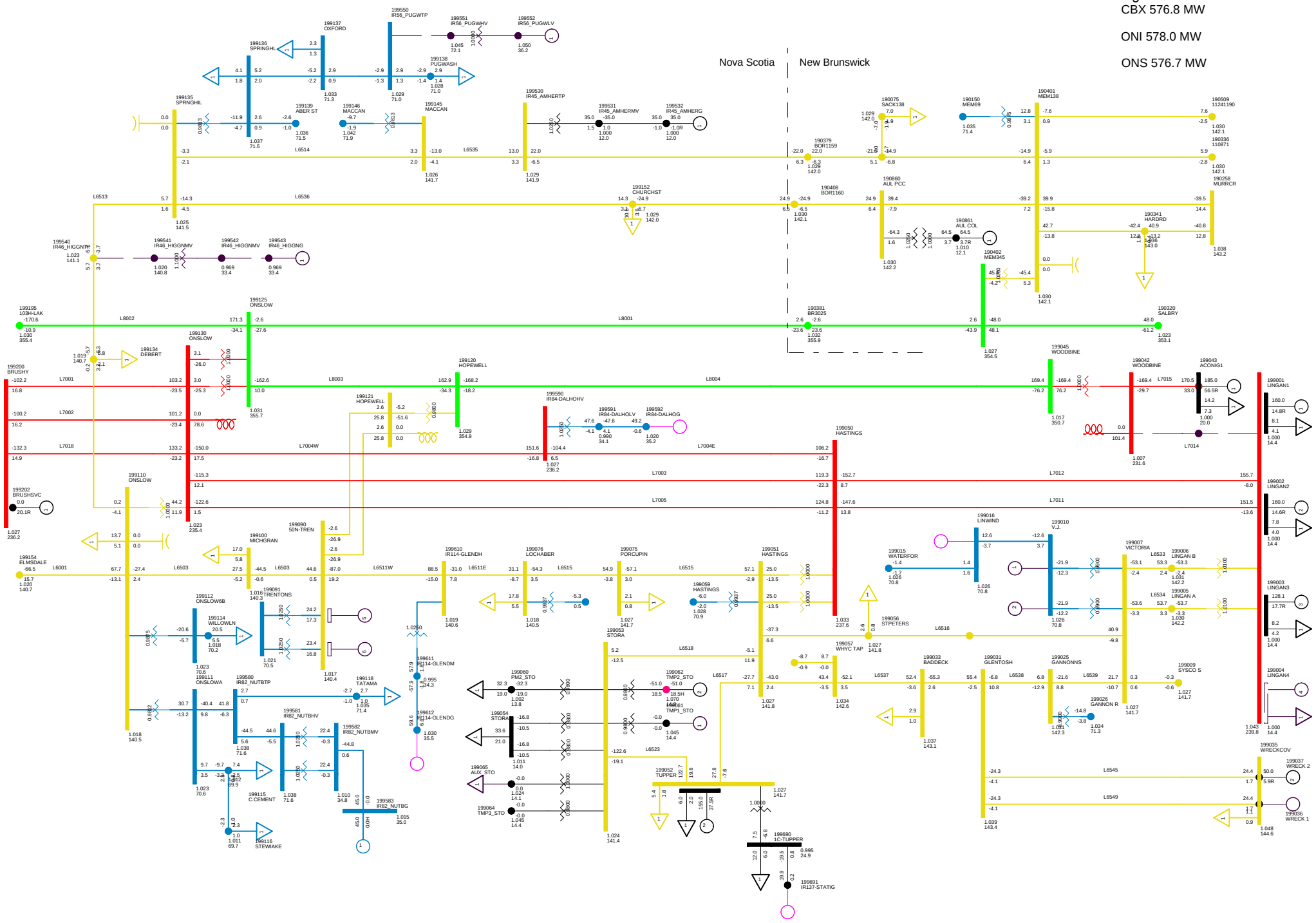

2013 LIGHT LOAD - NO TRENTON
C11 LOSE L7014
NORTHEASTERN NS TUE, DEC 09 2008 22:21

Total Wind Gen: 140.6 MW
Gross Lingan 448.1 MW
Gross Pt Aconi 185.0 MW
Gross Tupper 155.0 MW
Gross Trenton 0.0 MW
Gross Tuft's Cove 0.0 MW
Gross Wreck Cove 50.0 MW
Gross Gas Turbine 0.0 MW
Gross Small Hydro 25.0 MW
Net Stora Load 117.4 MW
Total BMPC Load 42.5 MW

Bus - VOLTAGE (KV/PU)
Branch - MW/MVAR
Equipment - MW/MVAR
110.0%RATEA
1.050/V 0.950/V
KV: <=25.000 <=69.000 <=138.000 <=230.000 <=345.000 >345.000

Figure ___

NSX 0.7 MW

CBX 580.2 MW

ONI 583.9 MW

ONS 576.5 MW

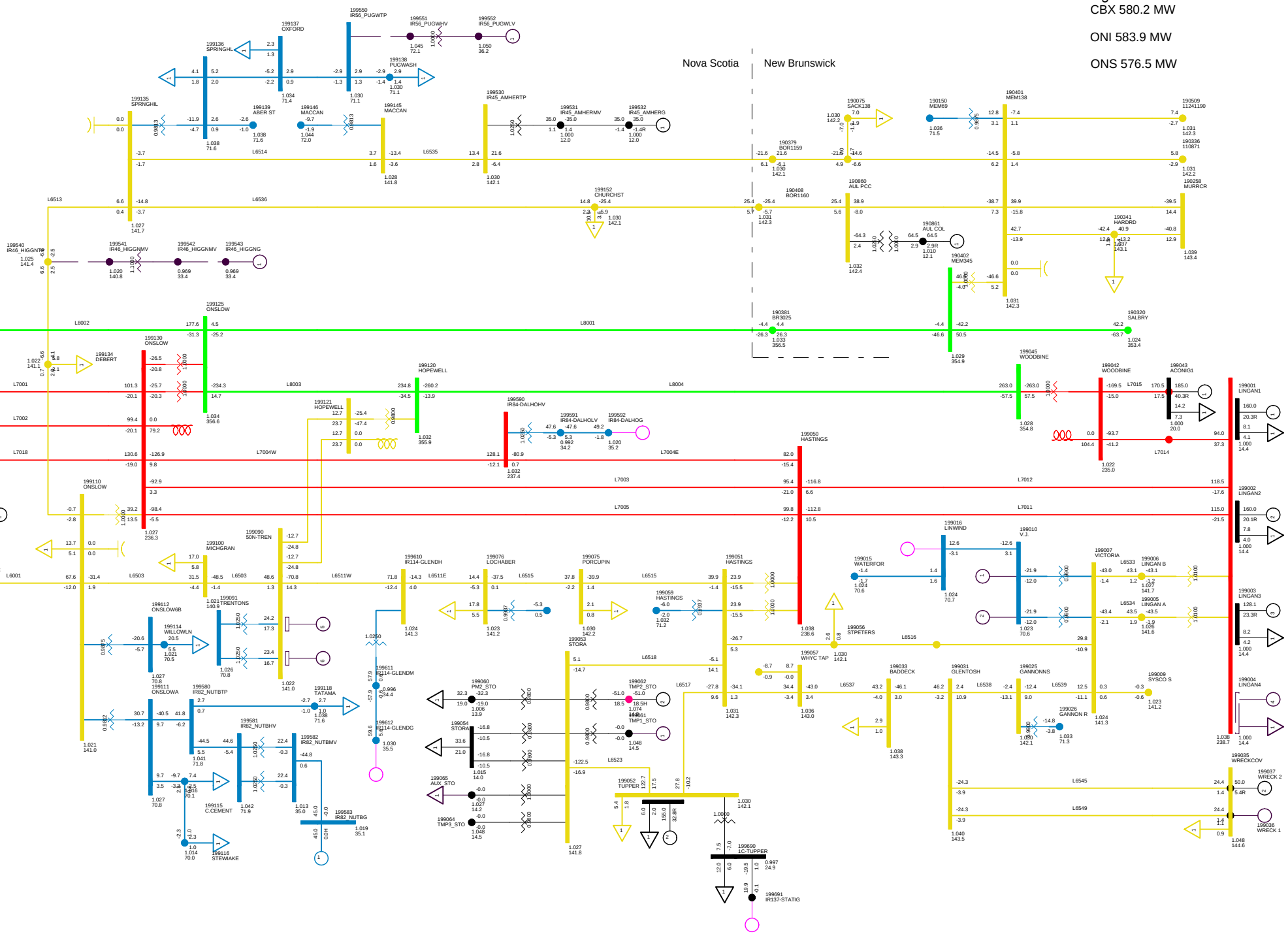

2010 LIGHT, NSLOAD=1150
NS-NB=0; NB-NE=0; CBX=580; ONI=583 ONS=576
NORTHEASTERN NS TUE, DEC 09 2008 22:21

Total Wind Gen: 140.6 MW | Gross Tupper 155.0 MW | Gross Wreck Cove 50.0 MW | Net Stora Load 117.4 MW
Gross Lingan 448.1 MW | Gross Trenton 0.0 MW | Gross Gas Turbine 0.0 MW | Total BMPC Load 42.5 MW
Gross Pt Aconi 185.0 MW | Gross Tuft's Cove 0.0 MW | Gross Small Hydro 25.0 MW

Bus - VOLTAGE (KV/PU)
Branch - MW/MVAR
Equipment - MW/MVAR
110.0%RATEA
1.050OV 0.950UV
KV: <=25.000 <=69.000 <=138.000 <=230.000 <=345.000 >345.000

Figure ___

NSX 17.7 MW

CBX 580.2 MW

ONI 600.9 MW

ONS 576.4 MW

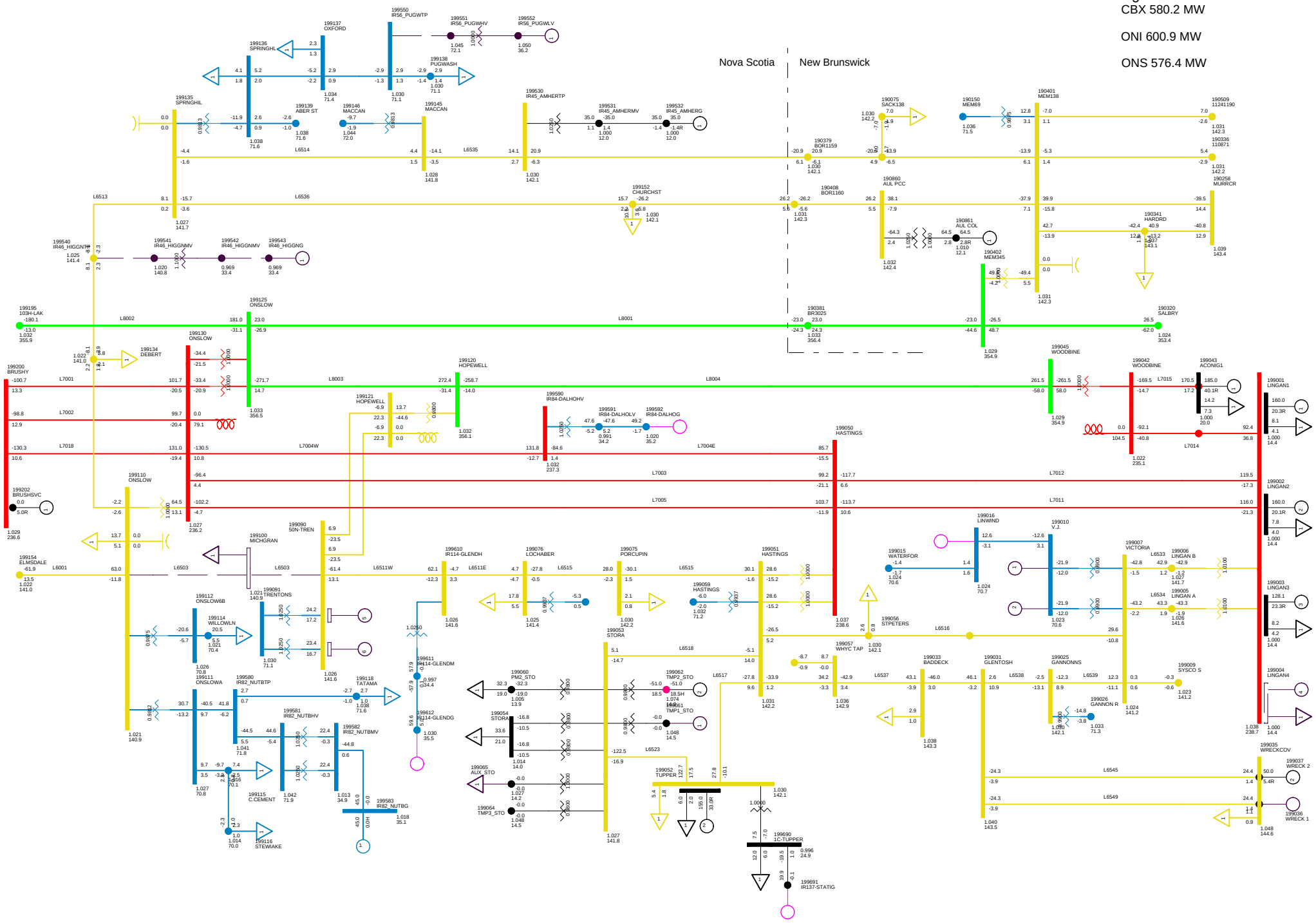

2013 LIGHT LOAD - NO TRENTON
C12 LOSE 6503
NORTHEASTERN NS TUE, DEC 09 2008 22:21

Total Wind Gen: 140.6 MW | Gross Tupper 155.0 MW | Gross Wreck Cove 50.0 MW | Net Stora Load 117.4 MW
Gross Lingan 448.1 MW | Gross Trenton 0.0 MW | Gross Gas Turbine 0.0 MW | Total BMPC Load 42.5 MW
Gross Pt Aconi 185.0 MW | Gross Tuft's Cove 0.0 MW | Gross Small Hydro 25.0 MW

Bus - VOLTAGE (KV/PU)
Branch - MW/MVAR
Equipment - MW/MVAR
110.0%RATEA
1.050UV 0.950UV
KV: <=25.000 <=69.000 <=138.000 <=230.000 <=345.000 >345.000

Figure ___

NSX 2.7 MW

CBX 580.5 MW

ONI 586.0 MW

ONS 576.5 MW

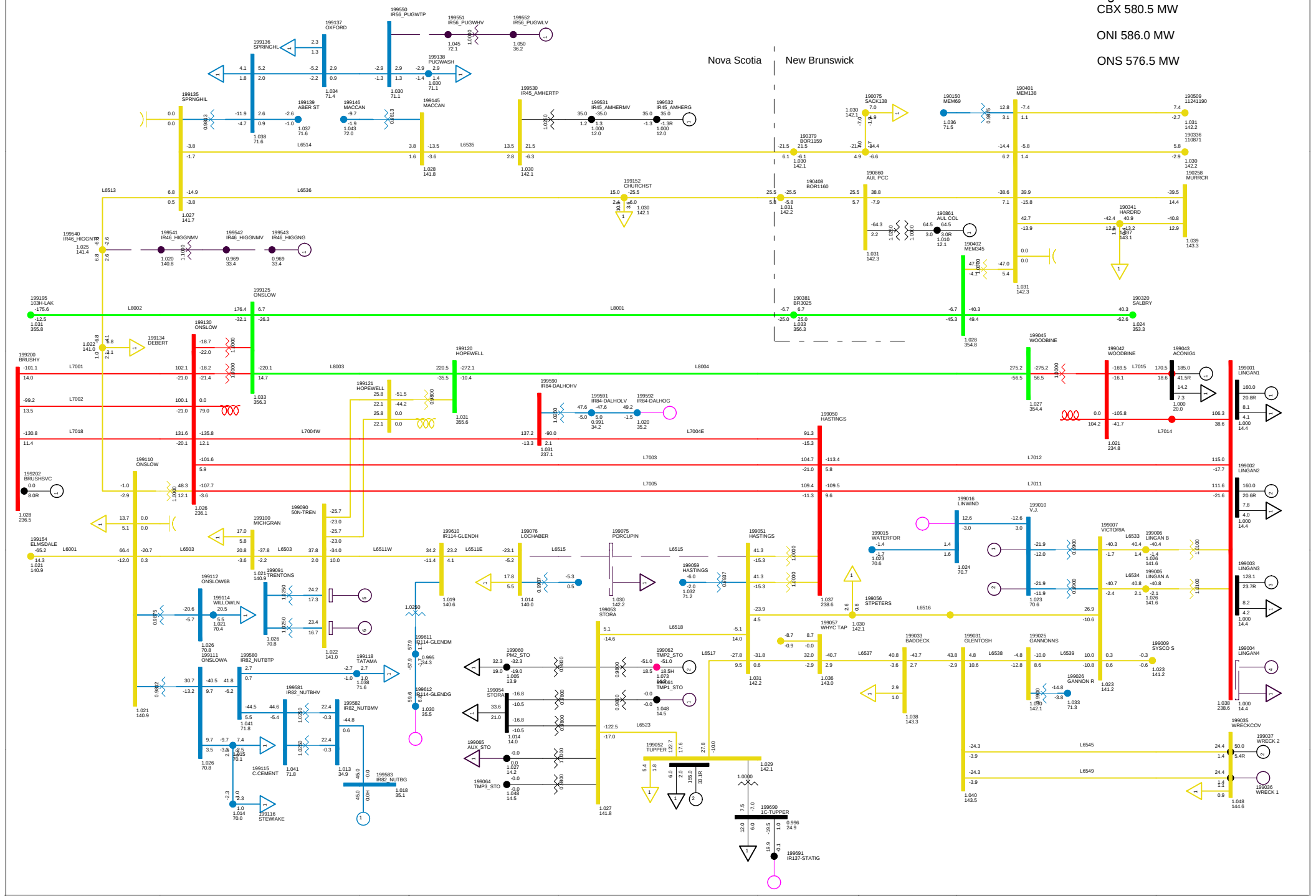

2013 LIGHT LOAD - NO TRENTON
C13 LOSE L6511
NORTHEASTERN NS TUE, DEC 09 2008 22:22

Total Wind Gen: 140.6 MW
Gross Lingan 448.1 MW
Gross Pt Aconi 185.0 MW
Gross Tupper 155.0 MW
Gross Trenton 0.0 MW
Gross Tuft's Cove 0.0 MW
Gross Wreck Cove 50.0 MW
Gross Gas Turbine 0.0 MW
Gross Small Hydro 25.0 MW
Net Stora Load 117.4 MW
Total BMPC Load 42.5 MW

Bus - VOLTAGE (KV/PU)
Branch - MW/MVAR
Equipment - MW/MVAR
110.0%RATEA
1.0500V 0.950UV
KV: <=25.000 <=69.000 <=138.000 <=230.000 <=345.000 >345.000

Figure ___

NSX 0.9 MW

CBX 580.3 MW

ONI 584.2 MW

ONS 576.5 MW

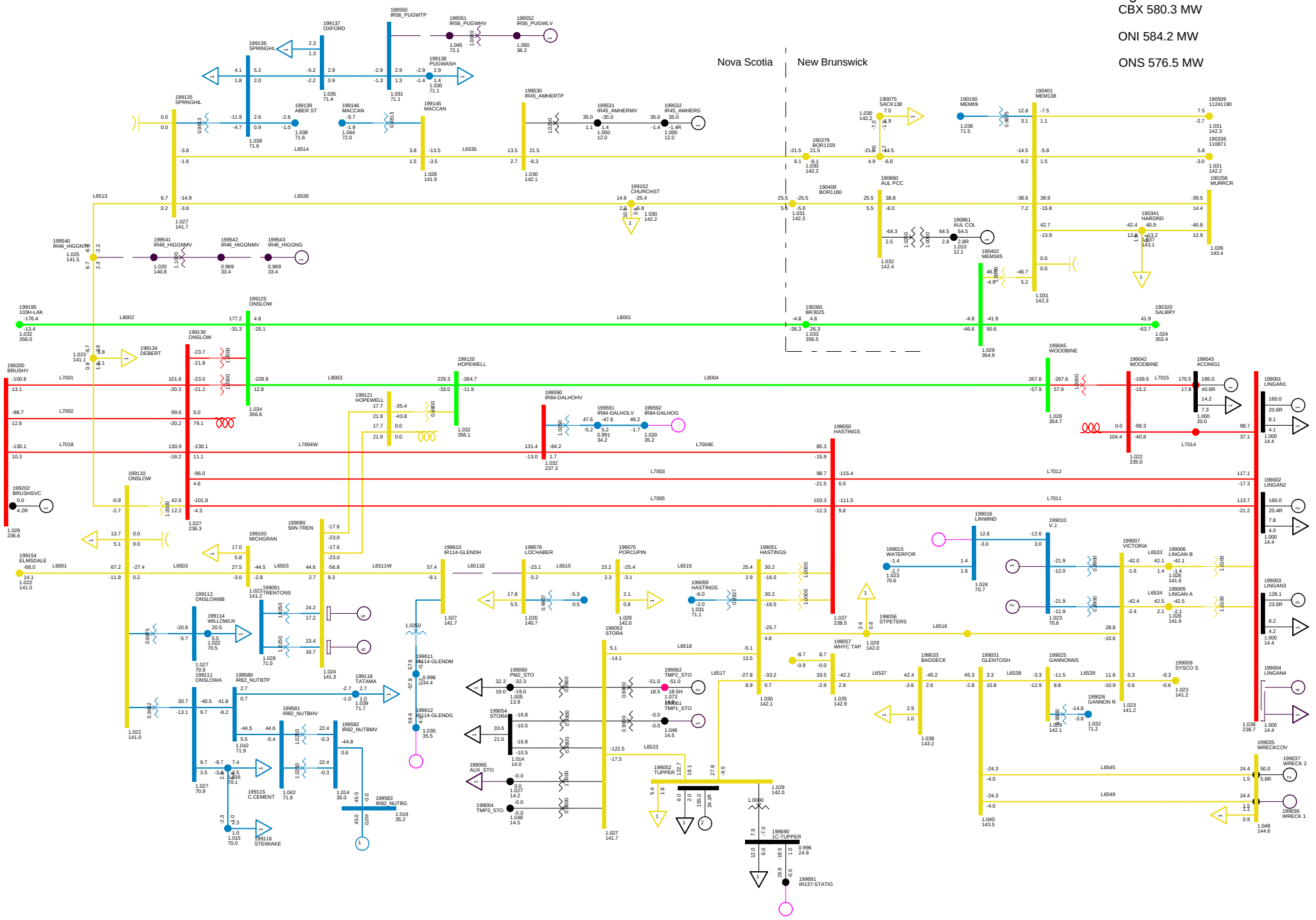

2013 LIGHT LOAD - NO TRENTON
C14 LOSE L6511E
NORTHEASTERN NS TUE, DEC 09 2008 22:22

Total Wind Gen: 140.6 MW | Gross Tupper 155.0 MW | Gross Wreck Cove 50.0 MW | Net Stora Load 117.4 MW
Gross Lingan 448.1 MW | Gross Trenton 0.0 MW | Gross Gas Turbine 0.0 MW | Total BMPC Load 42.5 MW
Gross Pt Aconi 185.0 MW | Gross Tuft's Cove 0.0 MW | Gross Small Hydro 25.0 MW

Bus - VOLTAGE (KV/PU)
Branch - MW/MVAR
Equipment - MW/MVAR
110.0%RATEA
1.050UV 0.950UV
KV: <=25.000 <=69.000 <=138.000 <=230.000 <=345.000 >345.000

Figure ___

NSX -0.9 MW

CBX 580.8 MW

ONI 582.4 MW

ONS 576.5 MW

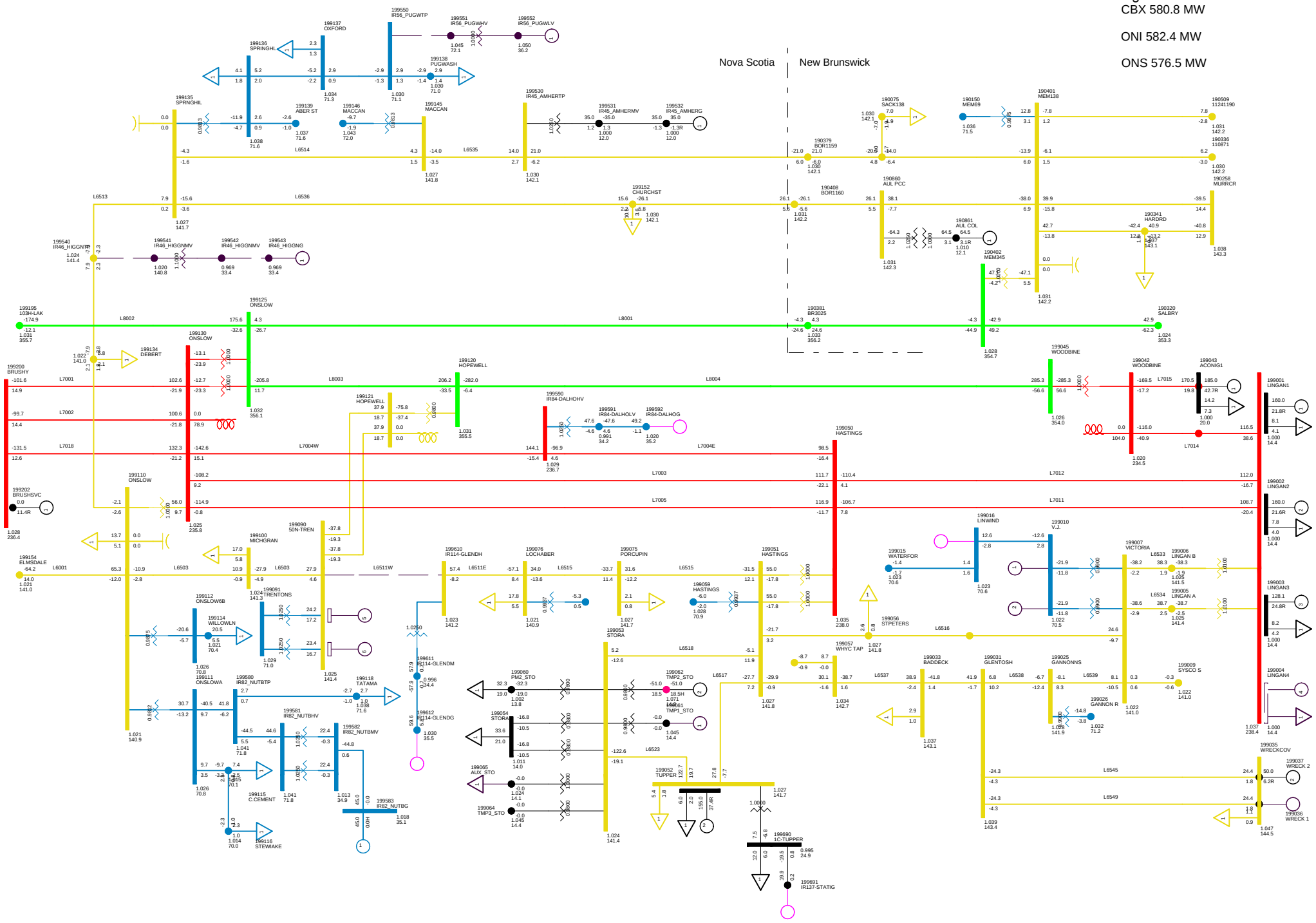

2013 LIGHT LOAD - NO TRENTON
C15 LOSE L6511W
NORTHEASTERN NS TUE, DEC 09 2008 22:22

Total Wind Gen: 140.6 MW
Gross Lingan 448.1 MW
Gross Pt Aconi 185.0 MW
Gross Tupper 155.0 MW
Gross Trenton 0.0 MW
Gross Tuft's Cove 0.0 MW
Gross Wreck Cove 50.0 MW
Gross Gas Turbine 0.0 MW
Gross Small Hydro 25.0 MW
Net Stora Load 117.4 MW
Total BMPC Load 42.5 MW

Bus - VOLTAGE (KV/PU)
Branch - MW/MVAR
Equipment - MW/MVAR
110.0%RATEA
1.050UV 0.950UV
KV: <=25.000 <=69.000 <=138.000 <=230.000 <=345.000 >345.000

Figure ___

NSX 6.5 MW

CBX 580.2 MW

ONI 583.9 MW

ONS 576.5 MW

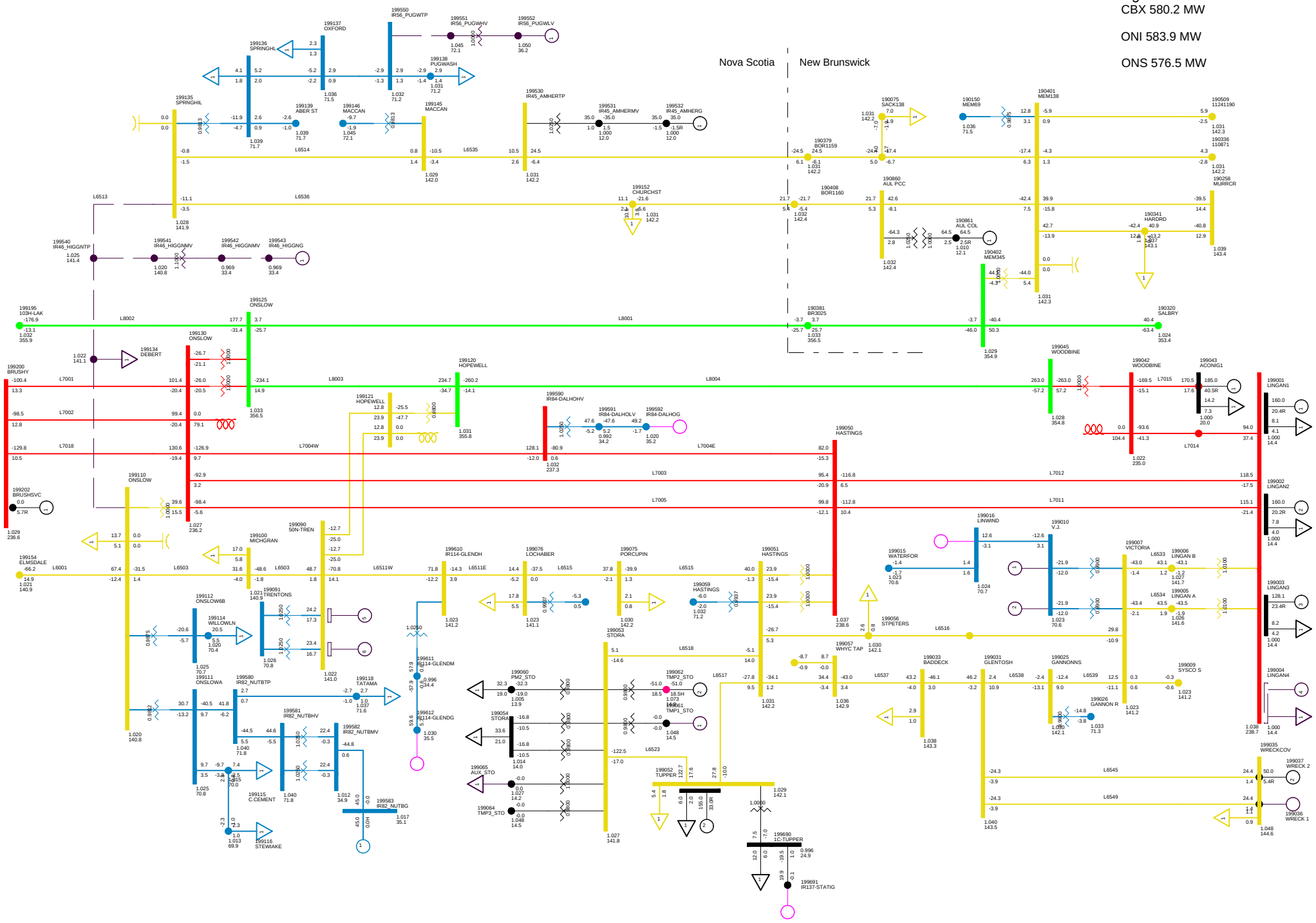

2013 LIGHT LOAD - NO TRENTON
C16 LOSE L6513
NORTHEASTERN NS TUE, DEC 09 2008 22:22

Total Wind Gen: 140.6 MW | Gross Tupper 155.0 MW | Gross Wreck Cove 50.0 MW | Net Stora Load 117.4 MW
Gross Lingan 448.1 MW | Gross Trenton 0.0 MW | Gross Gas Turbine 0.0 MW | Total BMPC Load 42.5 MW
Gross Pt Aconi 185.0 MW | Gross Tuft's Cove 0.0 MW | Gross Small Hydro 25.0 MW

Bus - VOLTAGE (KV/PU)
Branch - MW/MVAR
Equipment - MW/MVAR
110.0%RATEA
1.050OV 0.950UV
KV: <=25.000 <=69.000 <=138.000 <=230.000 <=345.000 >345.000

Figure ___

NSX 11.2 MW

CBX 580.2 MW

ONI 583.9 MW

ONS 576.5 MW

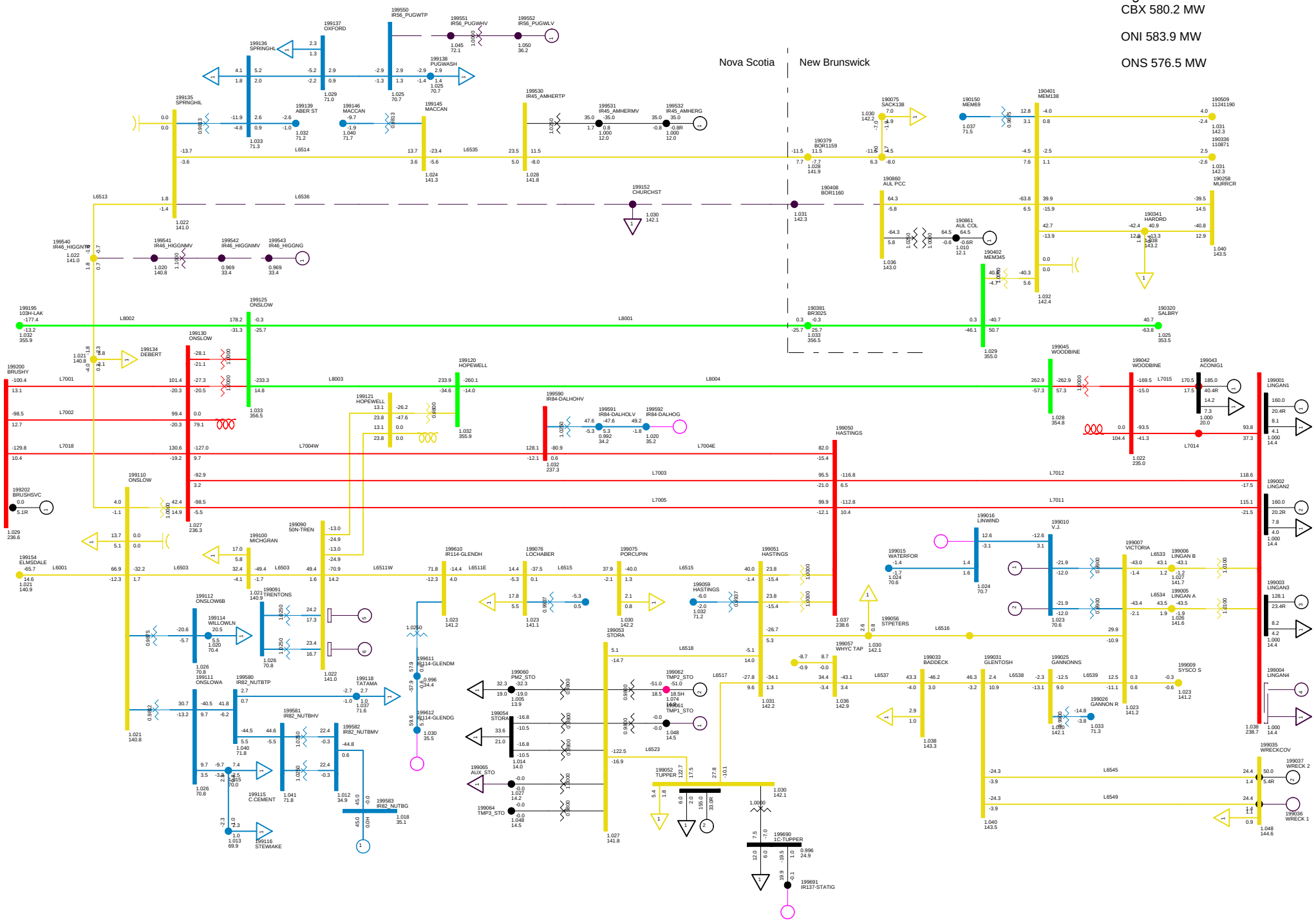

2013 LIGHT LOAD - NO TRENTON
C17 LOSE L6536
NORTHEASTERN NS TUE, DEC 09 2008 22:22

Total Wind Gen: 140.6 MW | Gross Tupper 155.0 MW | Gross Wreck Cove 50.0 MW | Net Stora Load 117.4 MW
Gross Lingan 448.1 MW | Gross Trenton 0.0 MW | Gross Gas Turbine 0.0 MW | Total BMPC Load 42.5 MW
Gross Pt Aconi 185.0 MW | Gross Tuft's Cove 0.0 MW | Gross Small Hydro 25.0 MW

Bus - VOLTAGE (KV/PU)
Branch - MW/MVAR
Equipment - MW/MVAR
110.0%RATEA
1.050OV 0.950UV
KV: <=25.000 <=69.000 <=138.000 <=230.000 <=345.000 >345.000

Figure ___

NSX 0.7 MW

CBX 580.2 MW

ONI 583.9 MW

ONS 576.5 MW

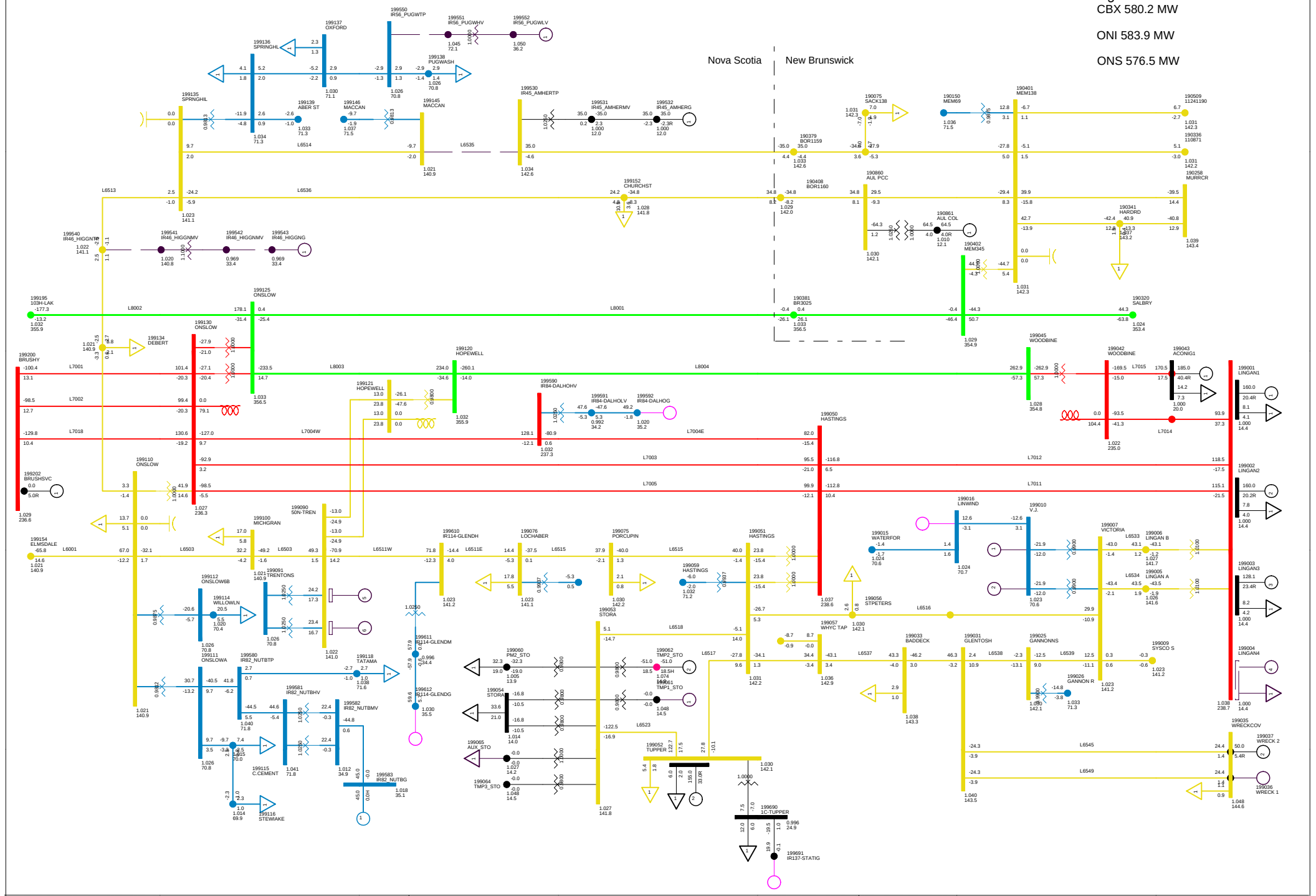

2013 LIGHT LOAD - NO TRENTON
C18 LOSE L6535S
NORTHEASTERN NS TUE, DEC 09 2008 22:22

Total Wind Gen: 140.6 MW | Gross Tupper 155.0 MW | Gross Wreck Cove 50.0 MW | Net Stora Load 117.4 MW
Gross Lingan 448.1 MW | Gross Trenton 0.0 MW | Gross Gas Turbine 0.0 MW | Total BMPC Load 42.5 MW
Gross Pt Aconi 185.0 MW | Gross Tuft's Cove 0.0 MW | Gross Small Hydro 25.0 MW

Bus - VOLTAGE (KV/PU)
Branch - MW/MVAR
Equipment - MW/MVAR
110.0%RATEA
1.050OV 0.950UV
KV: <=25.000 <=69.000 <=138.000 <=230.000 <=345.000 >345.000

Figure ___

NSX 0.5 MW

CBX 580.2 MW

ONI 584.0 MW

ONS 576.5 MW

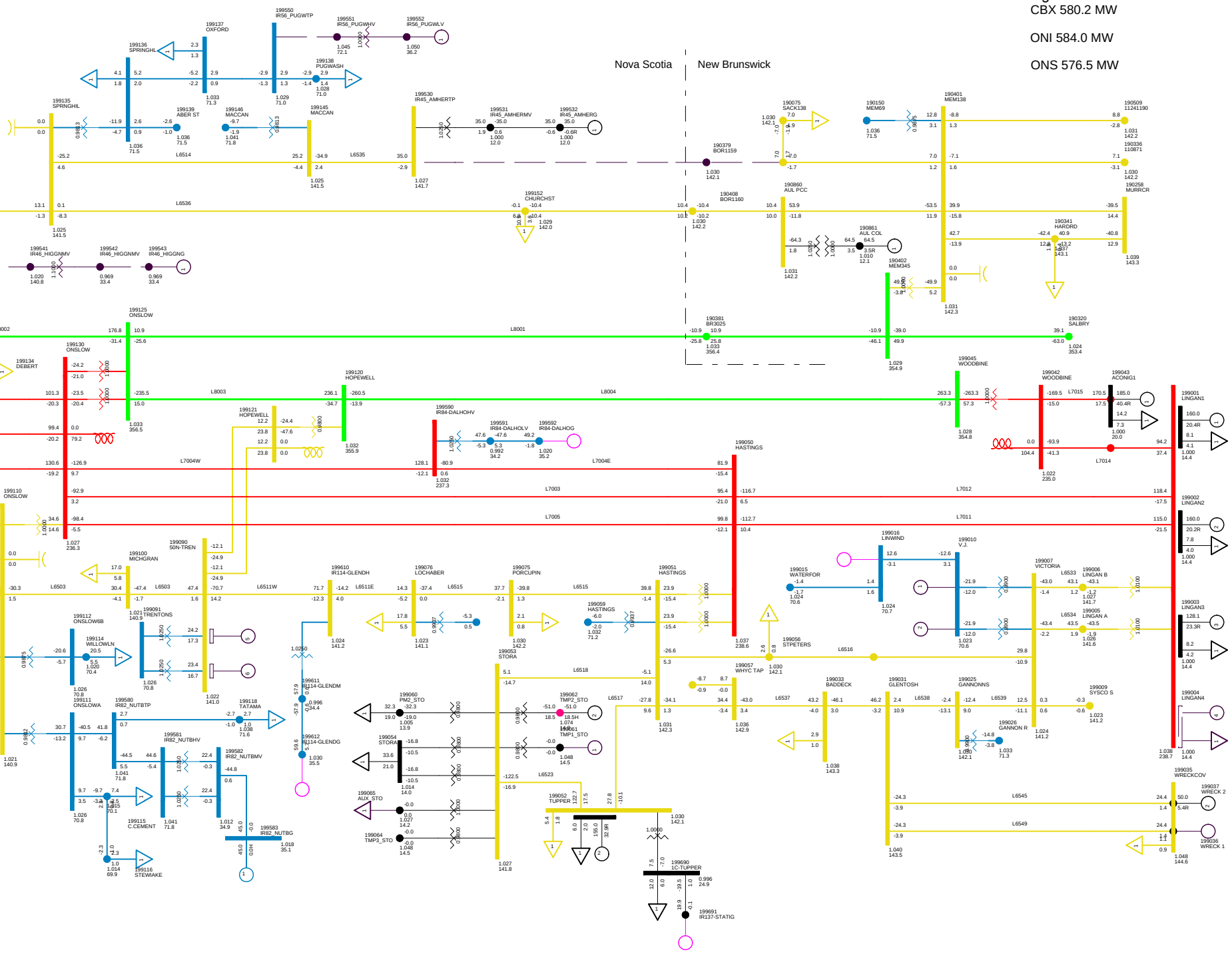

2013 LIGHT LOAD - NO TRENTON
C19 LOSE L6535N
NORTHEASTERN NS TUE, DEC 09 2008 22:22

Total Wind Gen: 140.6 MW
Gross Lingan 448.1 MW
Gross Pt Aconi 185.0 MW
Gross Tupper 155.0 MW
Gross Trenton 0.0 MW
Gross Tuft's Cove 0.0 MW
Gross Wreck Cove 50.0 MW
Gross Gas Turbine 0.0 MW
Gross Small Hydro 25.0 MW
Net Stora Load 117.4 MW
Total BMPC Load 42.5 MW

Bus - VOLTAGE (KV/PU)
Branch - MW/MVAR
Equipment - MW/MVAR
110.0%RATEA
1.050OV 0.950UV
KV: <=25.000 <=69.000 <=138.000 <=230.000 <=345.000 >345.000

Figure ___

NSX 10.7 MW

CBX 590.5 MW

ONI 594.0 MW

ONS 576.5 MW

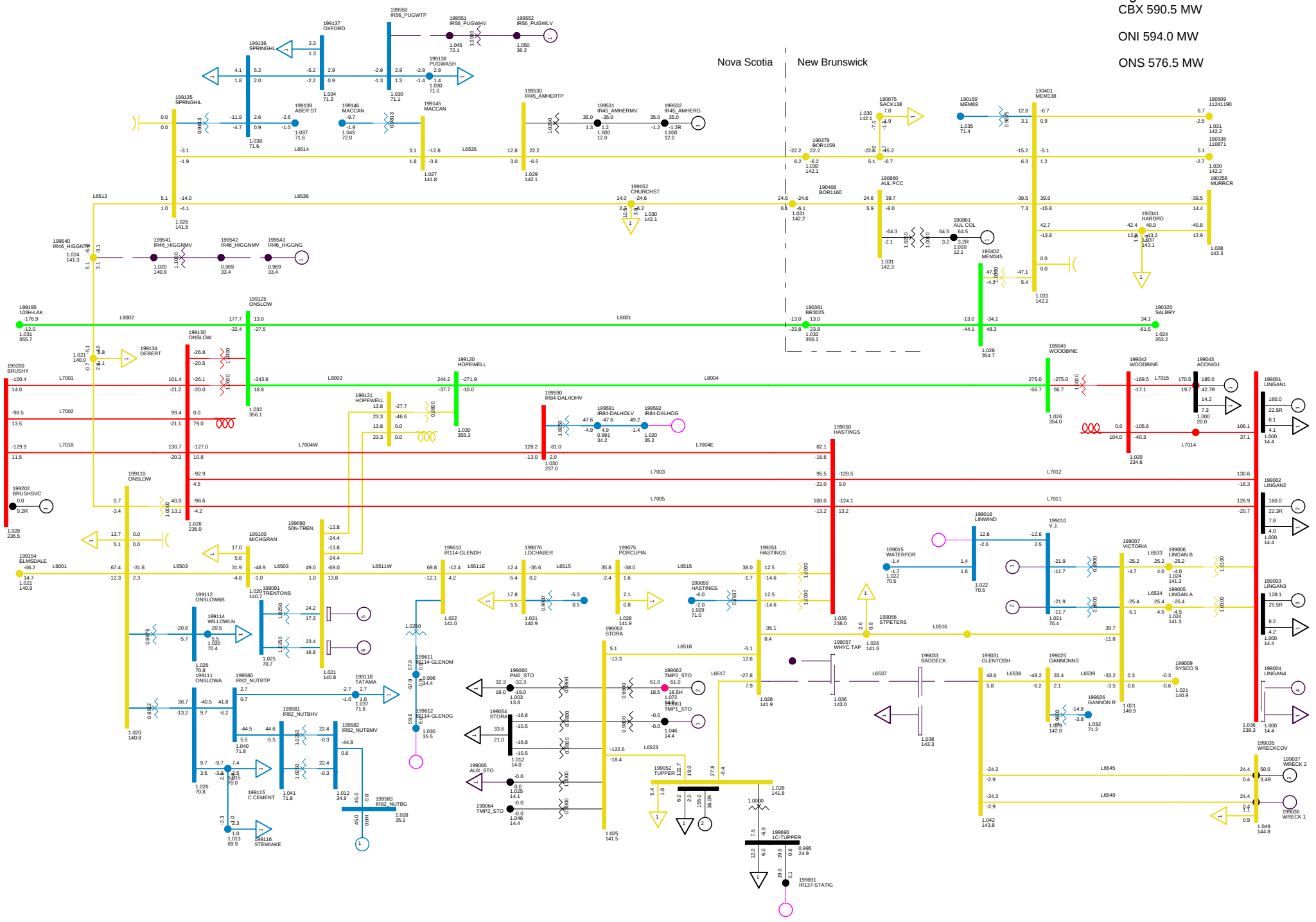

2013 LIGHT LOAD - NO TRENTON
C20 LOSE L6537
NORTHEASTERN NS TUE, DEC 09 2008 22:22

Total Wind Gen: 140.6 MW
Gross Lingan 448.1 MW
Gross Pt Aconi 185.0 MW
Gross Tupper 155.0 MW
Gross Trenton 0.0 MW
Gross Tuft's Cove 0.0 MW
Gross Wreck Cove 50.0 MW
Gross Gas Turbine 0.0 MW
Gross Small Hydro 25.0 MW
Net Stora Load 117.4 MW
Total BMPC Load 42.5 MW

Bus - VOLTAGE (KV/PU)
Branch - MW/MVAR
Equipment - MW/MVAR
110.0%RATEA
1.050OV 0.950UV
KV: <=25.000 <=69.000 <=138.000 <=230.000 <=345.000 >345.000

Figure ___

NSX 3.0 MW

CBX 582.5 MW

ONI 586.3 MW

ONS 576.5 MW

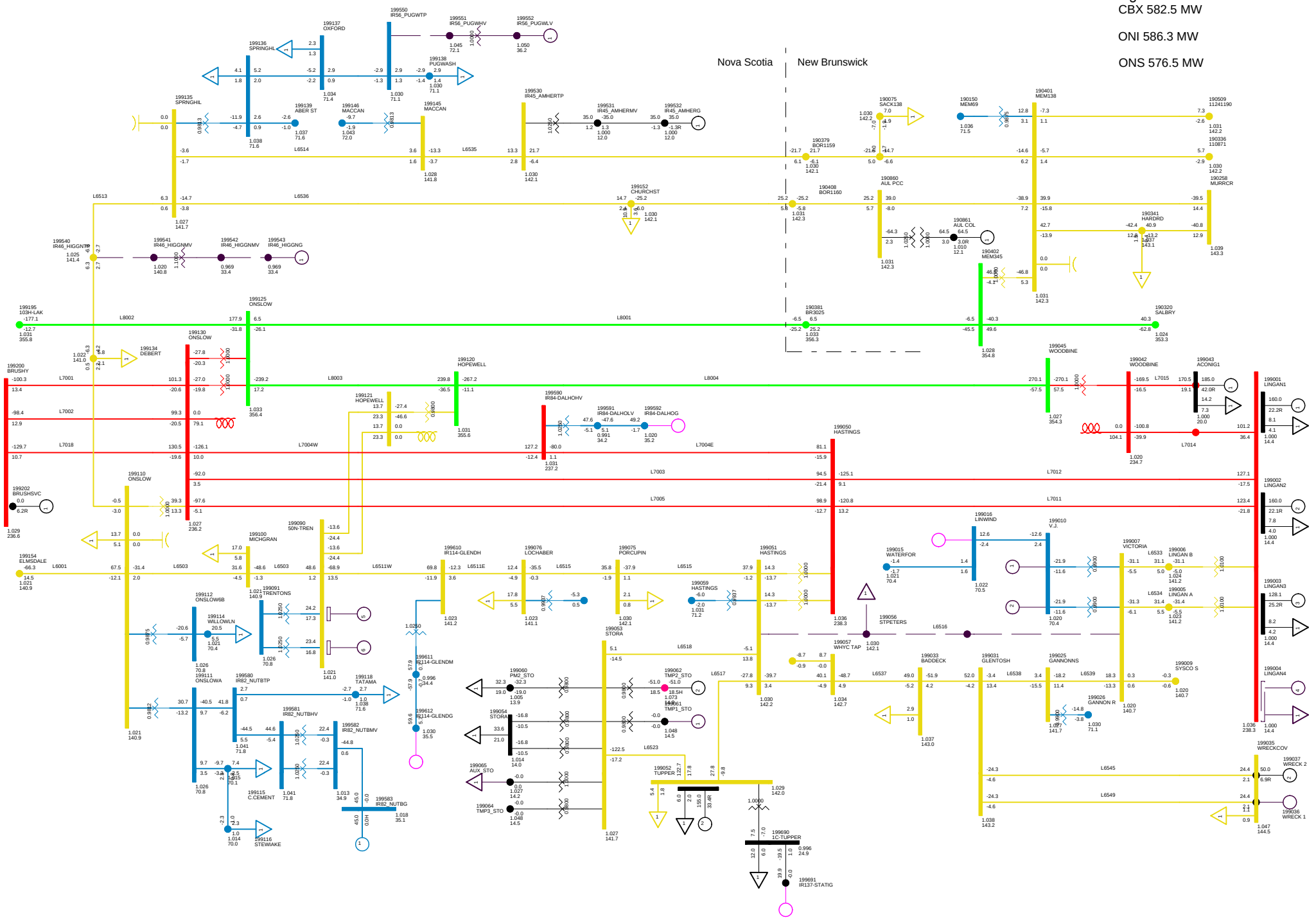

2013 LIGHT LOAD - NO TRENTON
C21 LOSE L6516
NORTHEASTERN NS TUE, DEC 09 2008 22:22

Total Wind Gen: 140.6 MW
Gross Lingan 448.1 MW
Gross Pt Aconi 185.0 MW
Gross Tupper 155.0 MW
Gross Trenton 0.0 MW
Gross Tuft's Cove 0.0 MW
Gross Wreck Cove 50.0 MW
Gross Gas Turbine 0.0 MW
Gross Small Hydro 25.0 MW
Net Stora Load 117.4 MW
Total BMPC Load 42.5 MW

Bus - VOLTAGE (KV/PU)
Branch - MW/MVAR
Equipment - MW/MVAR
110.0%RATEA
1.050UV 0.950UV
KV: <=25.000 <=69.000 <=138.000 <=230.000 <=345.000 >345.000

Figure ___

NSX 0.6 MW

CBX 580.2 MW

ONI 583.9 MW

ONS 576.5 MW

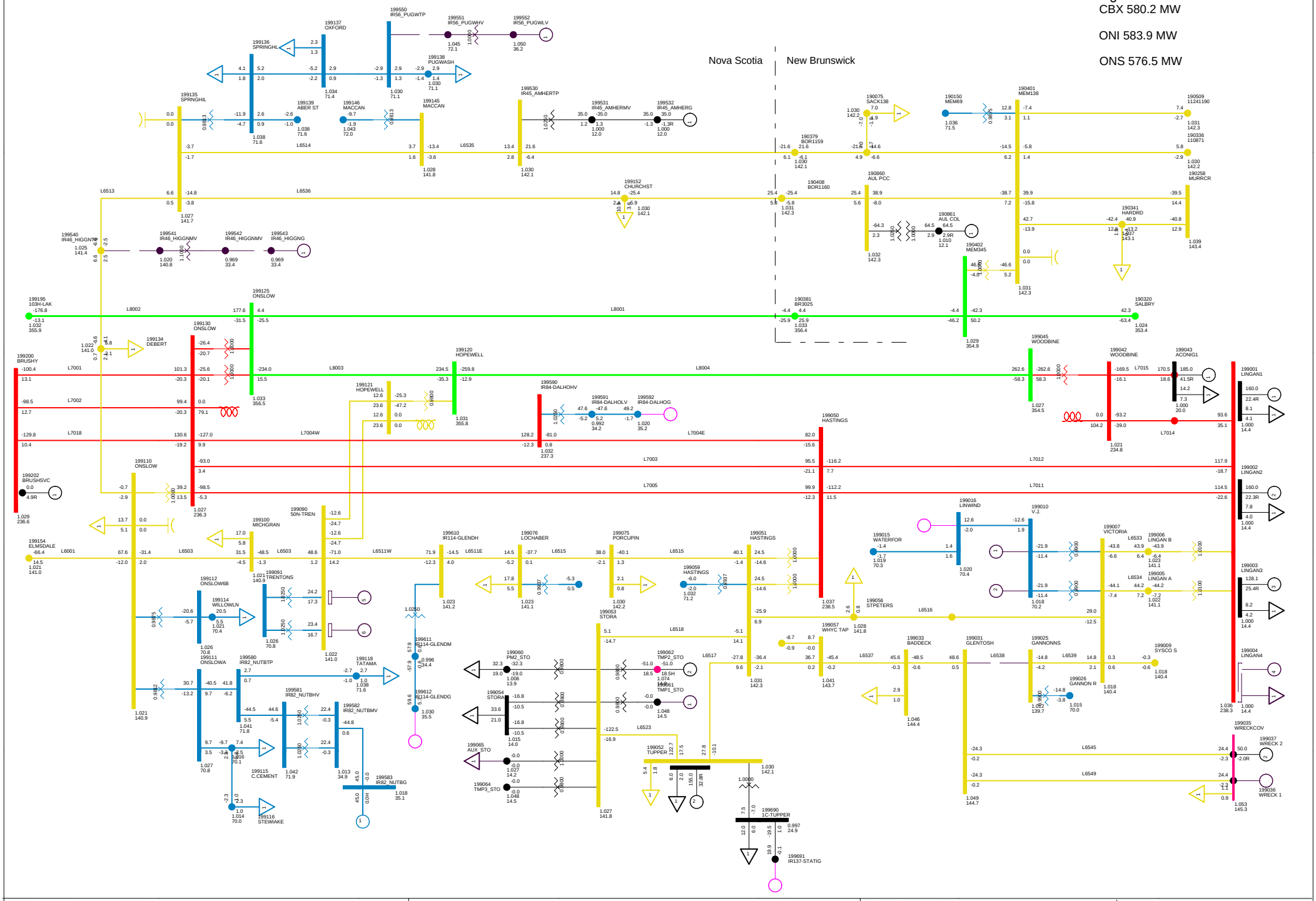

2013 LIGHT LOAD - NO TRENTON
C22 LOSE L6538
NORTHEASTERN NS TUE, DEC 09 2008 22:23

Total Wind Gen: 140.6 MW | Gross Tupper 155.0 MW | Gross Wreck Cove 50.0 MW | Net Stora Load 117.4 MW
Gross Lingan 448.1 MW | Gross Trenton 0.0 MW | Gross Gas Turbine 0.0 MW | Total BMPC Load 42.5 MW
Gross Pt Aconi 185.0 MW | Gross Tuft's Cove 0.0 MW | Gross Small Hydro 25.0 MW

Bus - VOLTAGE (KV/PU)
Branch - MW/MVAR
Equipment - MW/MVAR
110.0%RATEA
1.050OV 0.950UV
KV: <=25.000 <=69.000 <=138.000 <=230.000 <=345.000 >345.000

Figure ___

Total Wind Gen: 140.6 MW | Gross Tupper 155.0 MW | Gross Wreck Cove 50.0 MW

Gross Lingan 448.1 MW | Gross Trenton 0.0 MW | Gross Gas Turbine 0.0 MW

Gross Pt Aconi 185.0 MW | Gross Tuft's Cove 0.0 MW | Gross Small Hydro 25.0 MW

Net Stora Load 117.4 MW | Total BMPC Load 42.5 MW

NSX 0.7 MW

CBX 580.2 MW

ONI 583.9 MW

ONS 576.5 MW

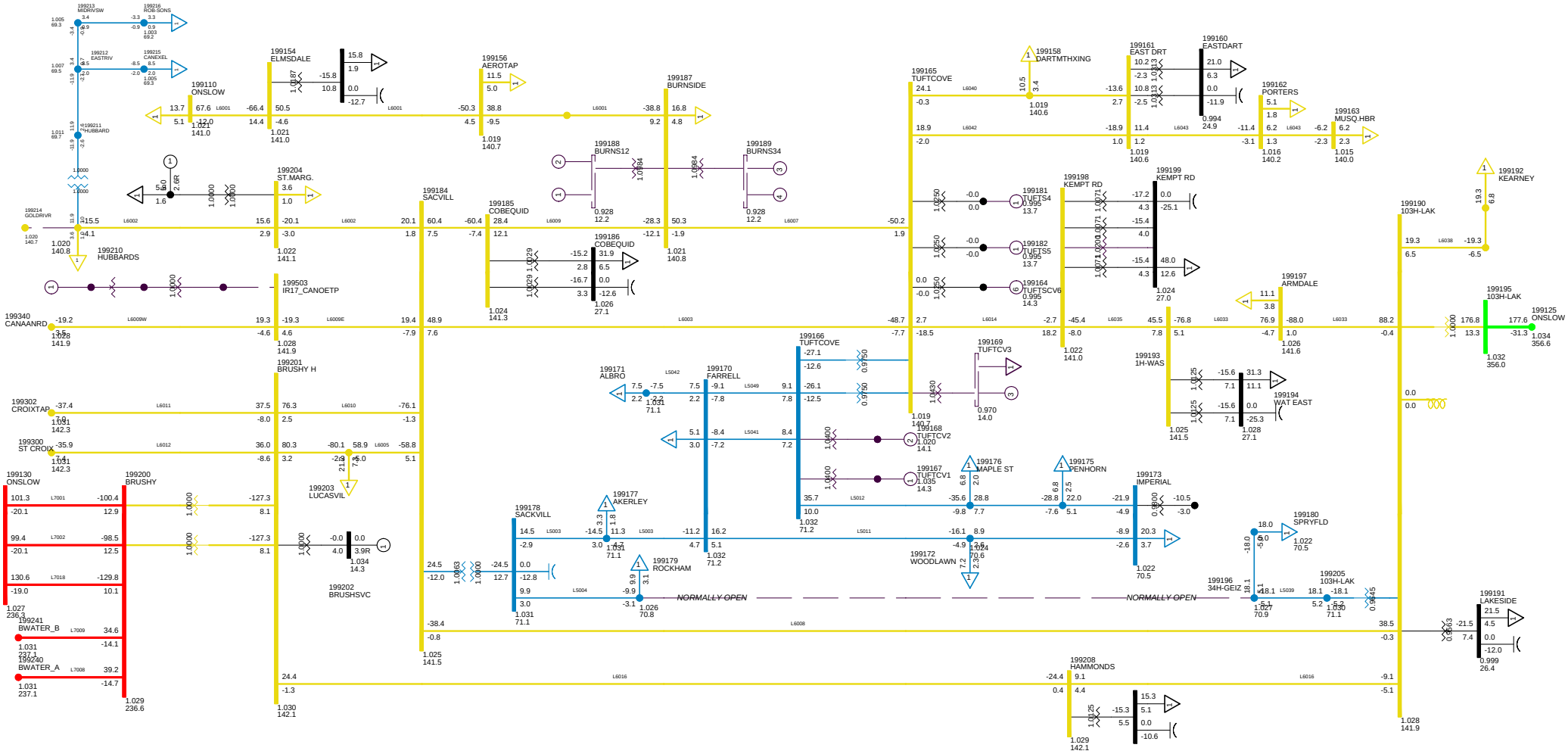

2010 LIGHT, NSLOAD=1150
NS-NB=0; NB-NE=0; CBX=580; ONI=583 ONS=576
METRO ZONE TUE, DEC 09 2008 22:23

Bus - VOLTAGE (KV/PU)
Branch - MW/MVAR
Equipment - MW/MVAR
100.0%RATEA
1.050OV 0.950UV
KV: <=30.000 <=69.000 <=138.000 <=230.000 <=345.000 >345.000

Figure __

Total Wind Gen: 140.6 MW | Gross Tupper 155.0 MW | Gross Wreck Cove 50.0 MW

Gross Lingan 448.1 MW | Gross Trenton 0.0 MW | Gross Gas Turbine 0.0 MW

Gross Pt Aconi 185.0 MW | Gross Tuft's Cove 0.0 MW | Gross Small Hydro 25.0 MW

Net Stora Load 117.4 MW | Total BMPC Load 42.5 MW

NSX 0.4 MW

CBX 580.2 MW

ONI 583.9 MW

ONS 576.8 MW

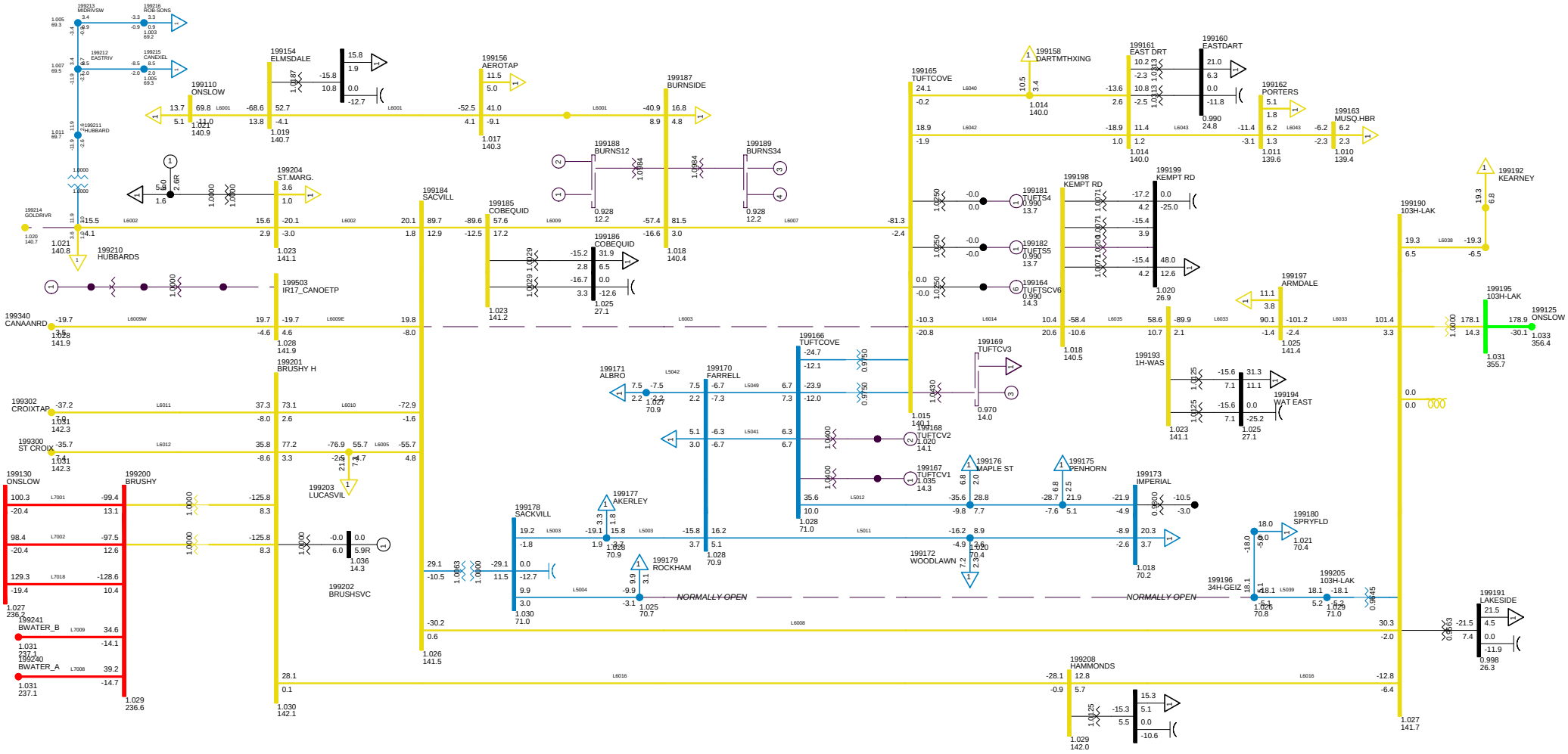

2013 LIGHT LOAD - NO TRENTON
C23 LOSE L6003
METRO ZONE TUE, DEC 09 2008 22:23

Bus - VOLTAGE (KV/PU)
Branch - MW/MVAR
Equipment - MW/MVAR
100.0%RATEA
1.050OV 0.950UV
KV: <=30.000 <=69.000 <=138.000 <=230.000 <=345.000 >345.000

Figure __

Total Wind Gen: 140.6 MW
Gross Tupper 155.0 MW
Gross Wreck Cove 50.0 MW
Gross Lingan 448.1 MW
Gross Trenton 0.0 MW
Gross Gas Turbine 0.0 MW
Gross Pt Aconi 185.0 MW
Gross Tuft's Cove 0.0 MW
Gross Small Hydro 25.0 MW
Net Stora Load 117.4 MW
Total BMPC Load 42.5 MW

NSX 22.0 MW
CBX 580.3 MW
ONI 584.0 MW
ONS 555.2 MW

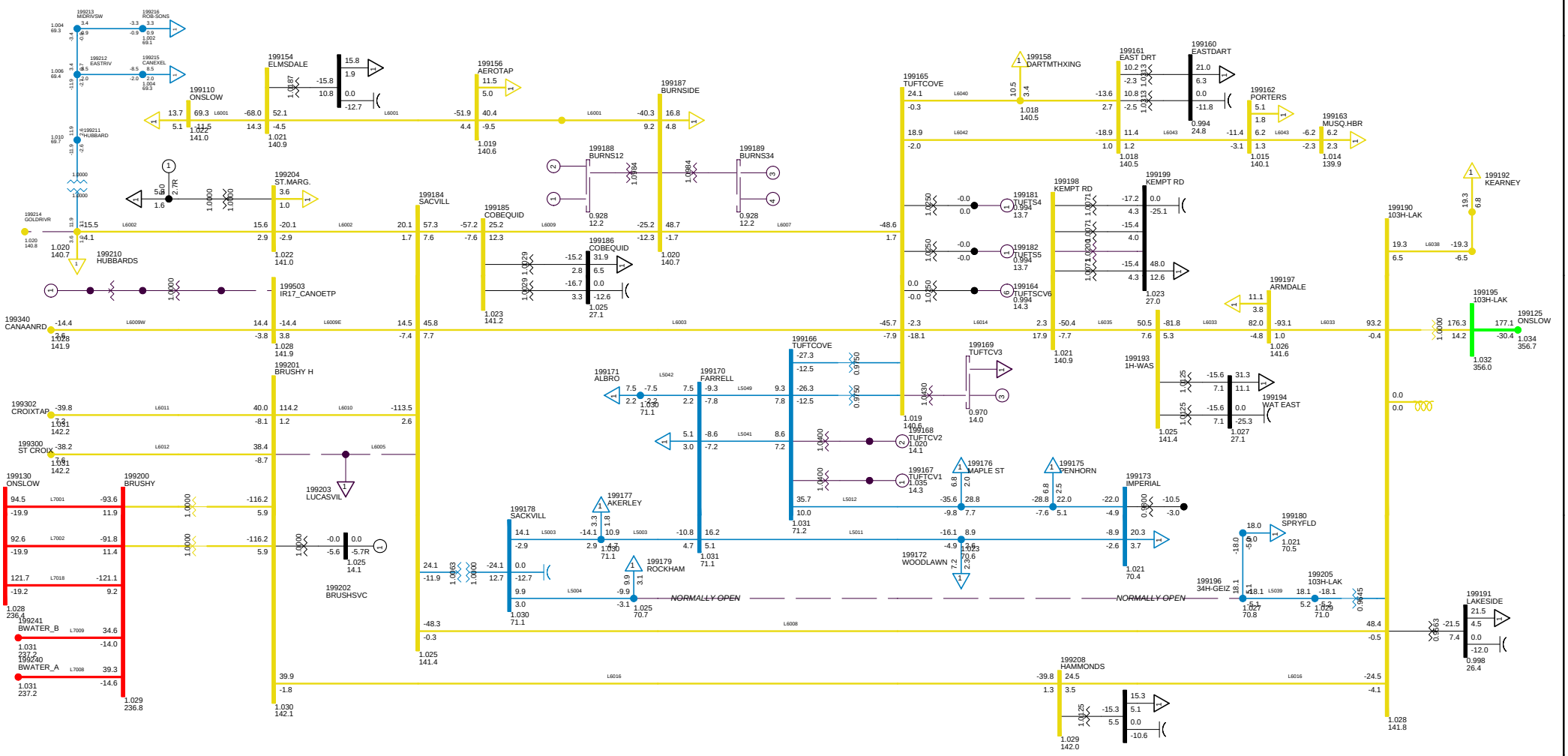

2013 LIGHT LOAD - NO TRENTON
C24 LOSE L6005
METRO ZONE TUE, DEC 09 2008 22:23

Bus - VOLTAGE (KV/PU)
Branch - MW/MVAR
Equipment - MW/MVAR
100.0%RATEA
1.050OV 0.950UV
KV: <=30.000 <=69.000 <=138.000 <=230.000 <=345.000 >345.000

Figure __

Total Wind Gen: 140.6 MW | Gross Tupper 155.0 MW | Gross Wreck Cove 50.0 MW

Gross Lingan 448.1 MW | Gross Trenton 0.0 MW | Gross Gas Turbine 0.0 MW

Gross Pt Aconi 185.0 MW | Gross Tuft's Cove 0.0 MW | Gross Small Hydro 25.0 MW

Net Stora Load 117.4 MW | Total BMPC Load 42.5 MW

NSX 0.6 MW

CBX 580.2 MW

ONI 584.0 MW

ONS 576.7 MW

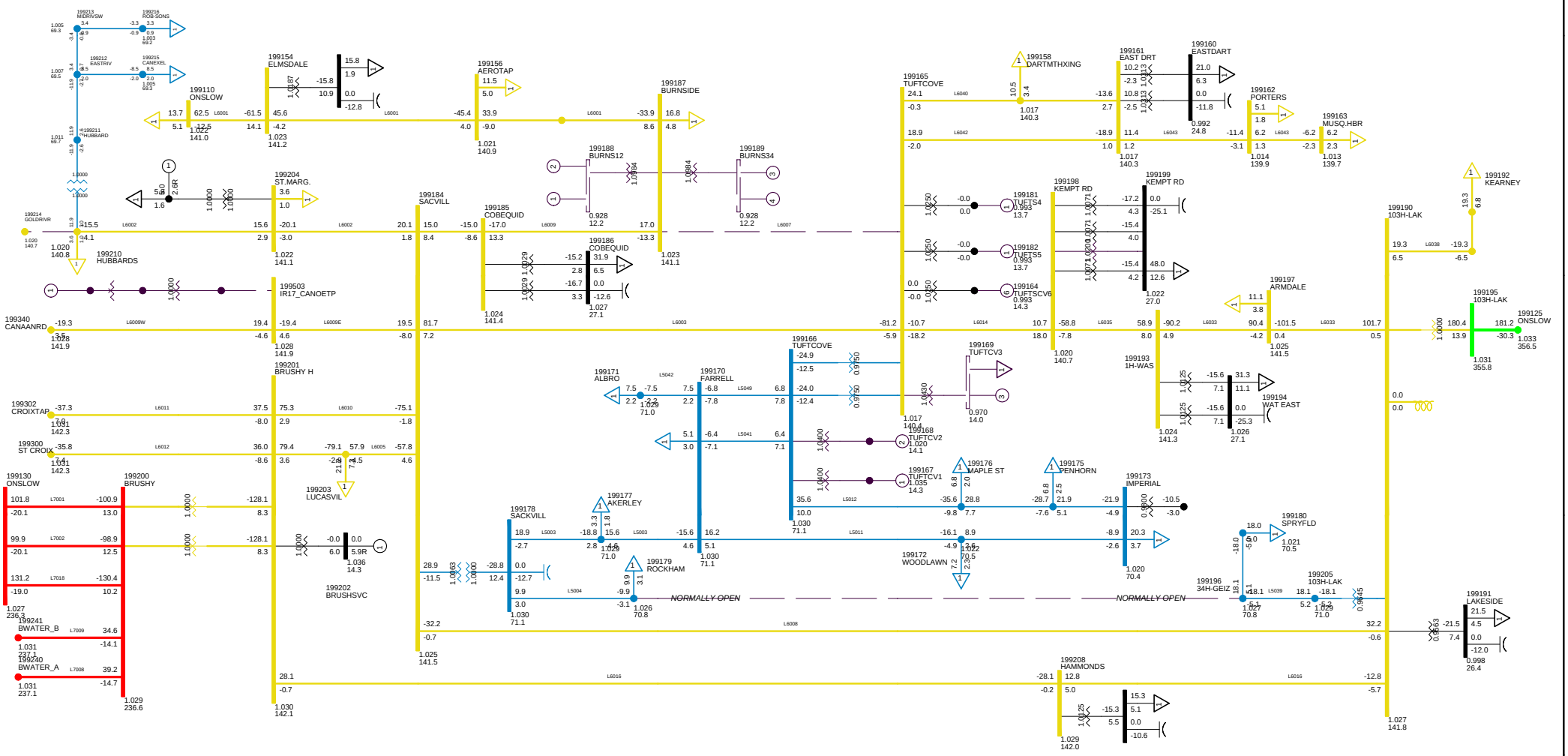

2013 LIGHT LOAD - NO TRENTON
C25 LOSE L6007
METRO ZONE TUE, DEC 09 2008 22:23

Bus - VOLTAGE (KV/PU)
Branch - MW/MVAR
Equipment - MW/MVAR
100.0%RATEA
1.050OV 0.950UV
KV: <=30.000 <=69.000 <=138.000 <=230.000 <=345.000 >345.000

Figure __

Total Wind Gen: 140.6 MW
Gross Tupper 155.0 MW
Gross Wreck Cove 50.0 MW
Gross Lingan 448.1 MW
Gross Trenton 0.0 MW
Gross Gas Turbine 0.0 MW
Gross Pt Aconi 185.0 MW
Gross Tuft's Cove 0.0 MW
Gross Small Hydro 25.0 MW
Net Stora Load 117.4 MW
Total BMPC Load 42.5 MW

NSX 0.4 MW
CBX 580.2 MW
ONI 583.9 MW
ONS 576.8 MW

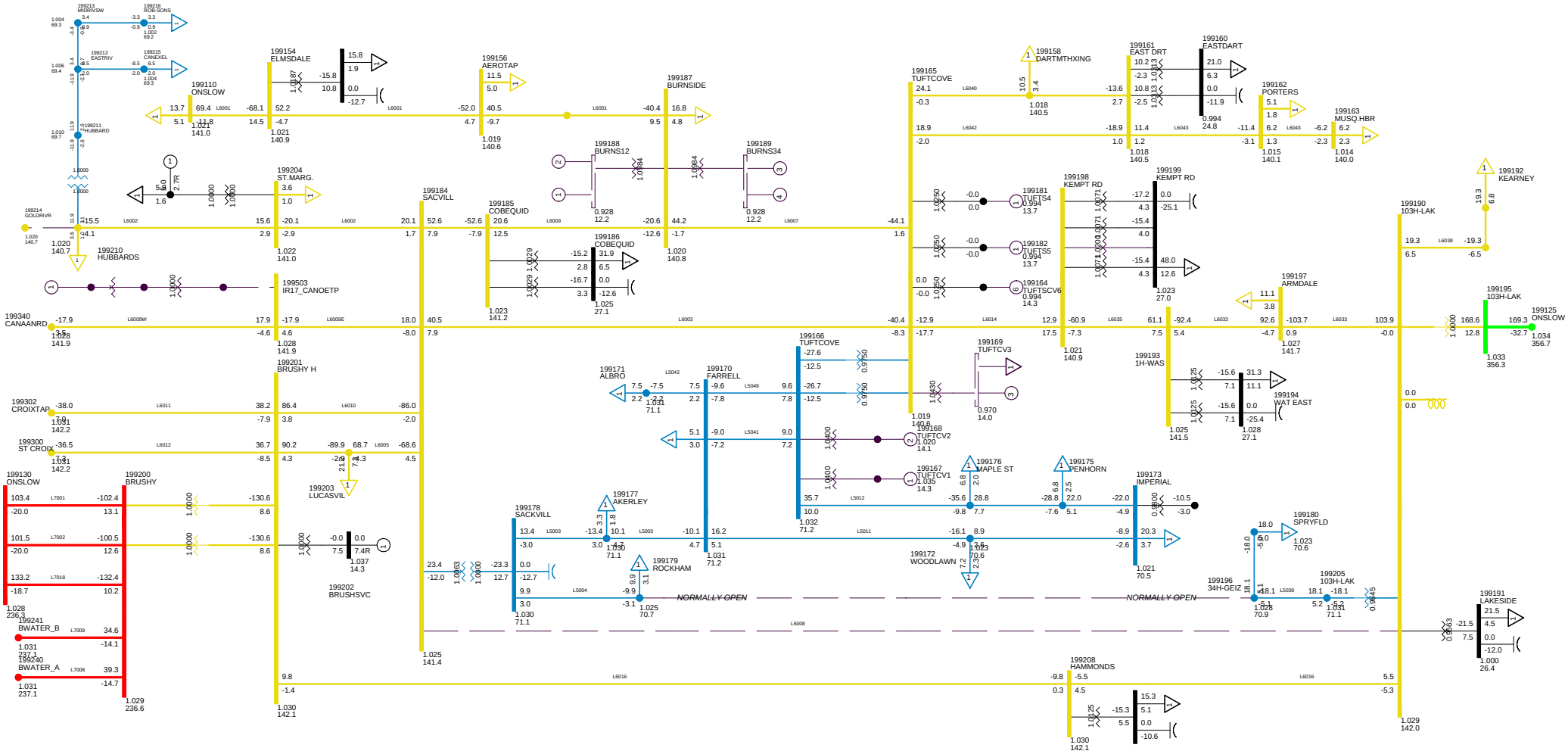

2013 LIGHT LOAD - NO TRENTON
C26 LOSE L6008
METRO ZONE TUE, DEC 09 2008 22:23

Bus - VOLTAGE (KV/PU)
Branch - MW/MVAR
Equipment - MW/MVAR
100.0%RATEA
1.050OV 0.950UV
KV: <=30.000 <=69.000 <=138.000 <=230.000 <=345.000 >345.000

Figure __

Total Wind Gen: 140.6 MW
Gross Tupper 155.0 MW
Gross Wreck Cove 50.0 MW
Gross Lingan 448.1 MW
Gross Trenton 0.0 MW
Gross Gas Turbine 0.0 MW
Gross Pt Aconi 185.0 MW
Gross Tuft's Cove 0.0 MW
Gross Small Hydro 25.0 MW
Net Stora Load 117.4 MW
Total BMPC Load 42.5 MW

NSX 16.3 MW
CBX 580.2 MW
ONI 584.0 MW
ONS 561.0 MW

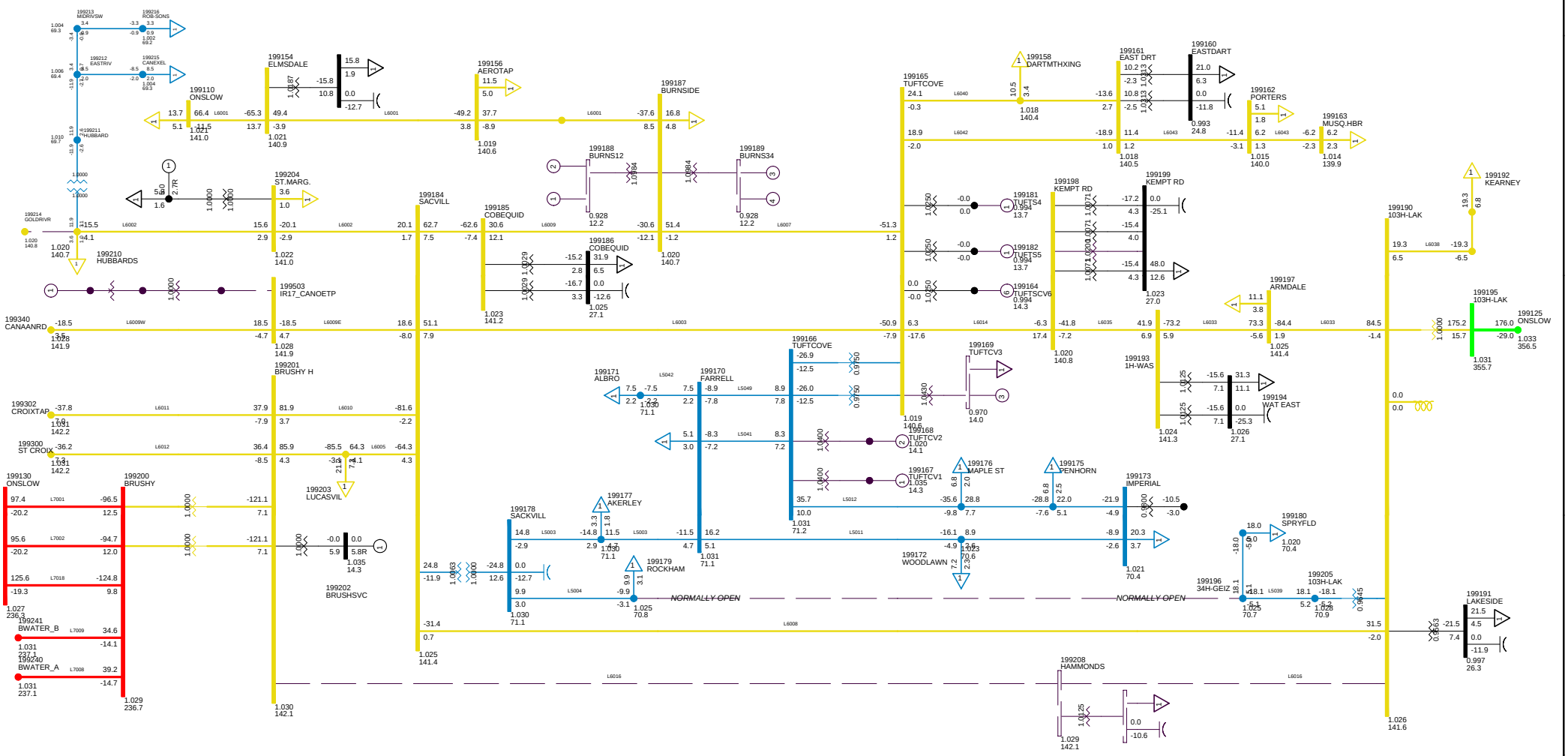

2013 LIGHT LOAD - NO TRENTON
C27 LOSE L6009
METRO ZONE TUE, DEC 09 2008 22:23

Bus - VOLTAGE (KV/PU)
Branch - MW/MVAR
Equipment - MW/MVAR
100.0%RATEA
1.050OV 0.950UV
KV: <=30.000 <=69.000 <=138.000 <=230.000 <=345.000 >345.000

Figure __

Total Wind Gen: 140.6 MW | Gross Tupper 155.0 MW | Gross Wreck Cove 50.0 MW

Gross Lingan 448.1 MW | Gross Trenton 0.0 MW | Gross Gas Turbine 0.0 MW

Gross Pt Aconi 185.0 MW | Gross Tuft's Cove 0.0 MW | Gross Small Hydro 25.0 MW

Net Stora Load 117.4 MW | Total BMPC Load 42.5 MW

NSX 0.1 MW

CBX 580.2 MW

ONI 583.9 MW

ONS 577.1 MW

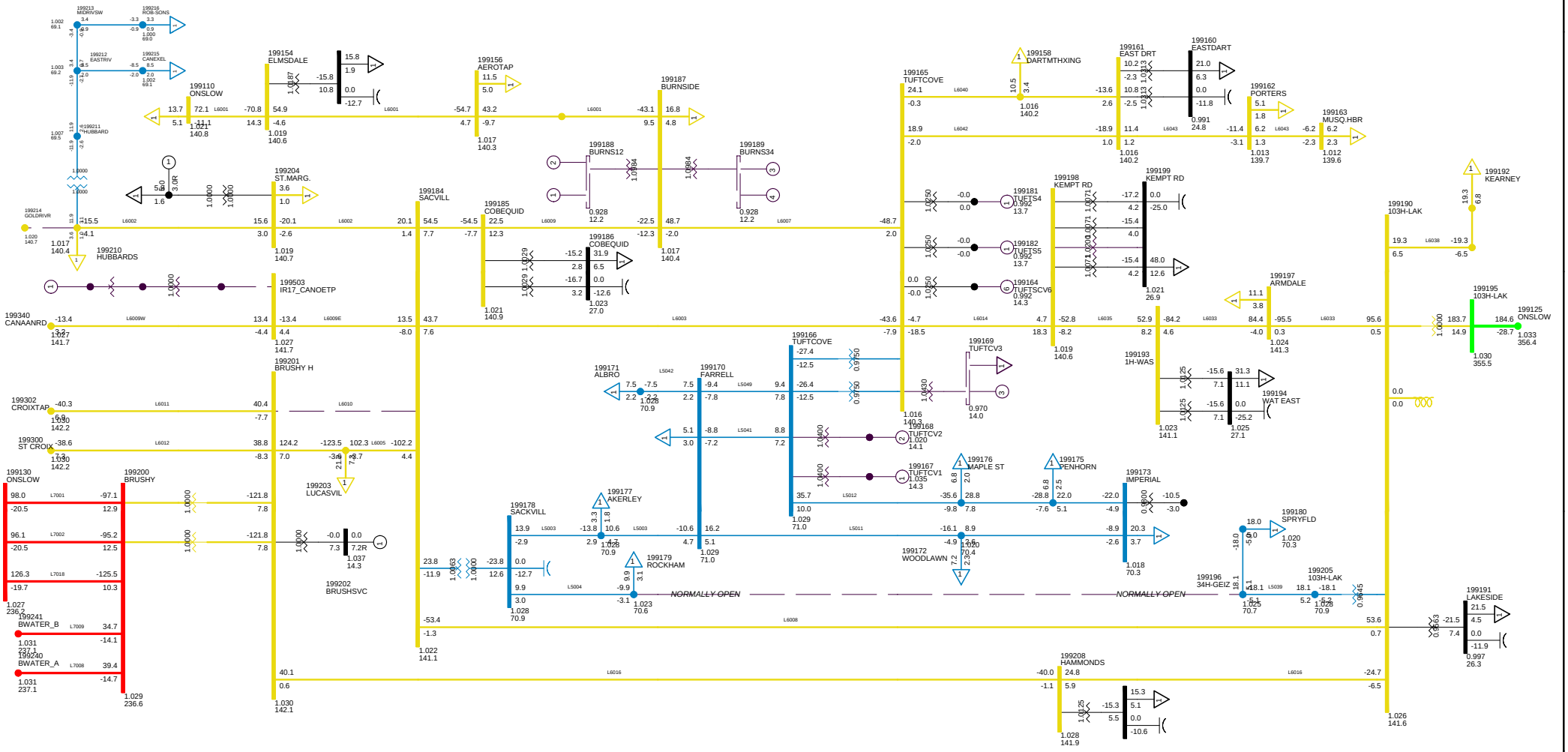

2013 LIGHT LOAD - NO TRENTON
C28 LOSE L6010
METRO ZONE TUE, DEC 09 2008 22:23

Bus - VOLTAGE (KV/PU)
Branch - MW/MVAR
Equipment - MW/MVAR
100.0%RATEA
1.050OV 0.950UV
KV: <=30.000 <=69.000 <=138.000 <=230.000 <=345.000 >345.000

Figure __

Total Wind Gen: 140.6 MW | Gross Tupper 155.0 MW | Gross Wreck Cove 50.0 MW

Gross Lingan 448.1 MW | Gross Trenton 0.0 MW | Gross Gas Turbine 0.0 MW

Gross Pt Aconi 185.0 MW | Gross Tuft's Cove 0.0 MW | Gross Small Hydro 25.0 MW

Net Stora Load 117.4 MW | Total BMPC Load 42.5 MW

NSX 0.7 MW

CBX 580.2 MW

ONI 584.0 MW

ONS 576.5 MW

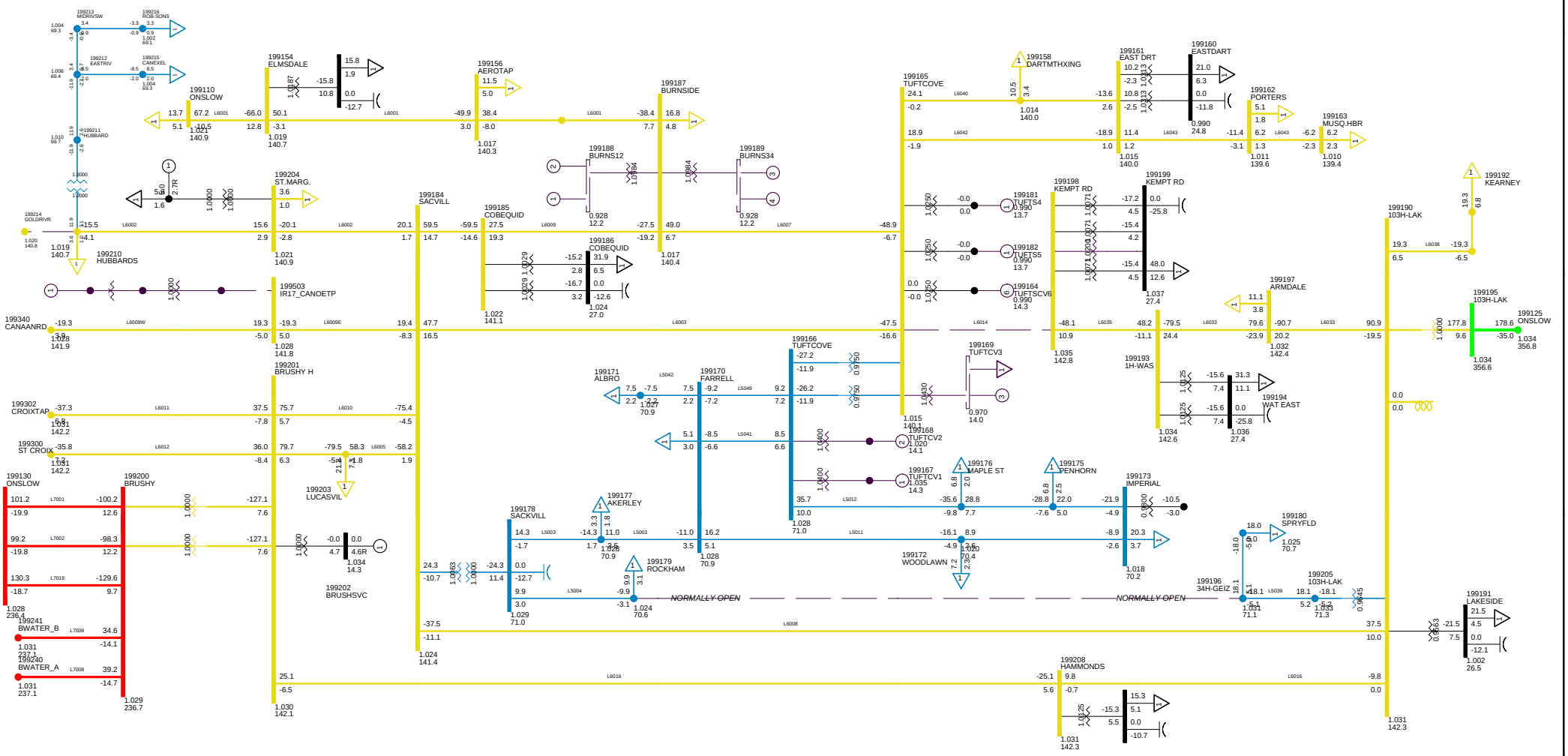

2013 LIGHT LOAD - NO TRENTON
C29 LOSE L6014
METRO ZONE TUE, DEC 09 2008 22:24

Bus - VOLTAGE (KV/PU)
Branch - MW/MVAR
Equipment - MW/MVAR
100.0%RATEA
1.050OV 0.950UV
KV: <=30.000 <=69.000 <=138.000 <=230.000 <=345.000 >345.000

Figure __

Total Wind Gen: 140.6 MW | Gross Tupper 155.0 MW | Gross Wreck Cove 50.0 MW

Gross Lingan 448.1 MW | Gross Trenton 0.0 MW | Gross Gas Turbine 0.0 MW

Gross Pt Aconi 185.0 MW | Gross Tuft's Cove 0.0 MW | Gross Small Hydro 25.0 MW

Net Stora Load 117.4 MW | Total BMPC Load 42.5 MW

NSX 16.3 MW

CBX 580.2 MW

ONI 584.0 MW

ONS 561.0 MW

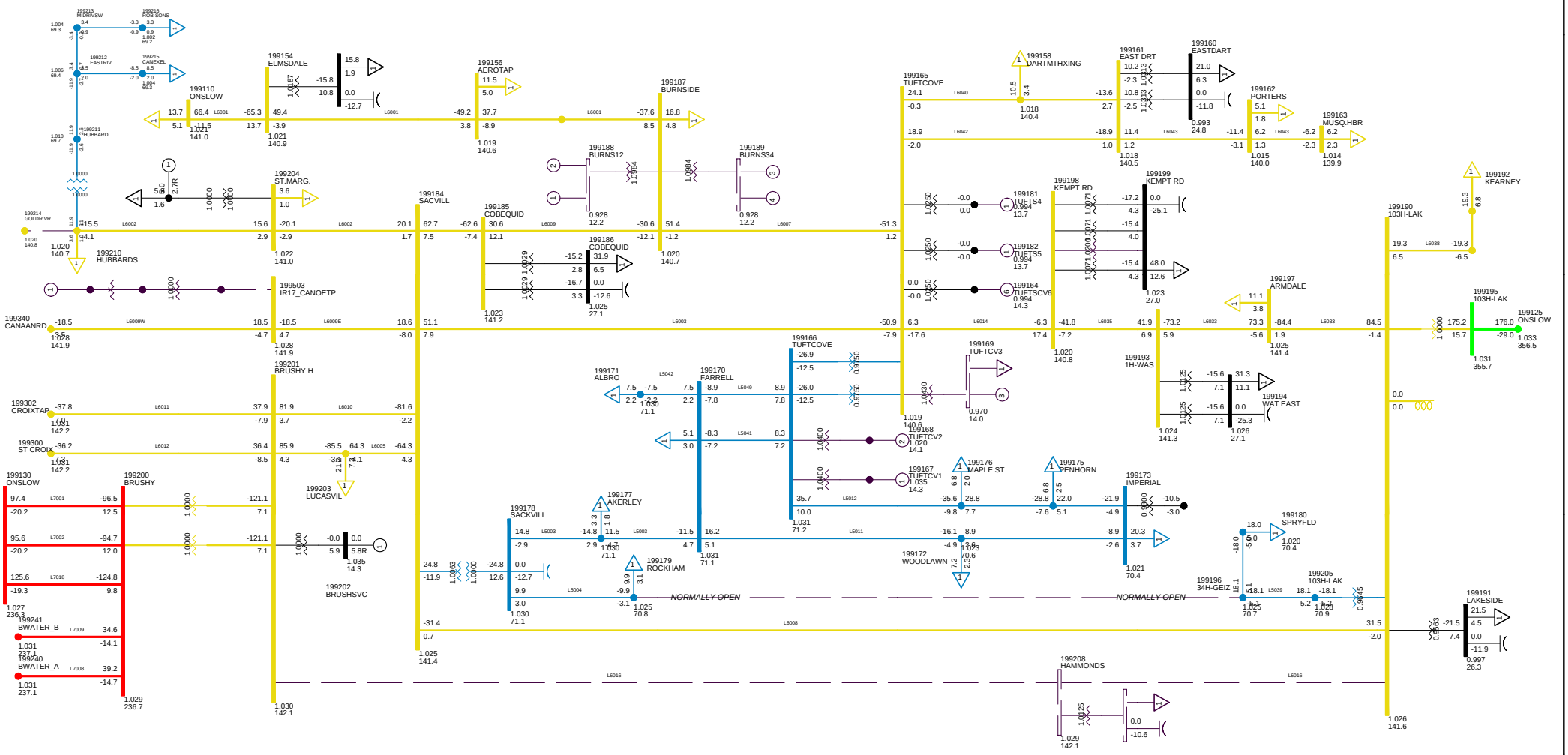

2013 LIGHT LOAD - NO TRENTON
C30 LOSE L6016
METRO ZONE TUE, DEC 09 2008 22:24

Bus - VOLTAGE (KV/PU)
Branch - MW/MVAR
Equipment - MW/MVAR
100.0%RATEA
1.050OV 0.950UV
KV: <=30.000 <=69.000 <=138.000 <=230.000 <=345.000 >345.000

Figure __

Total Wind Gen: 140.6 MW
Gross Tupper 155.0 MW
Gross Wreck Cove 50.0 MW
Gross Lingan 448.1 MW
Gross Trenton 0.0 MW
Gross Gas Turbine 0.0 MW
Gross Pt Aconi 185.0 MW
Gross Tuft's Cove 0.0 MW
Gross Small Hydro 25.0 MW
Net Stora Load 117.4 MW
Total BMPC Load 42.5 MW

NSX 26.1 MW
CBX 580.2 MW
ONI 583.9 MW
ONS 551.1 MW

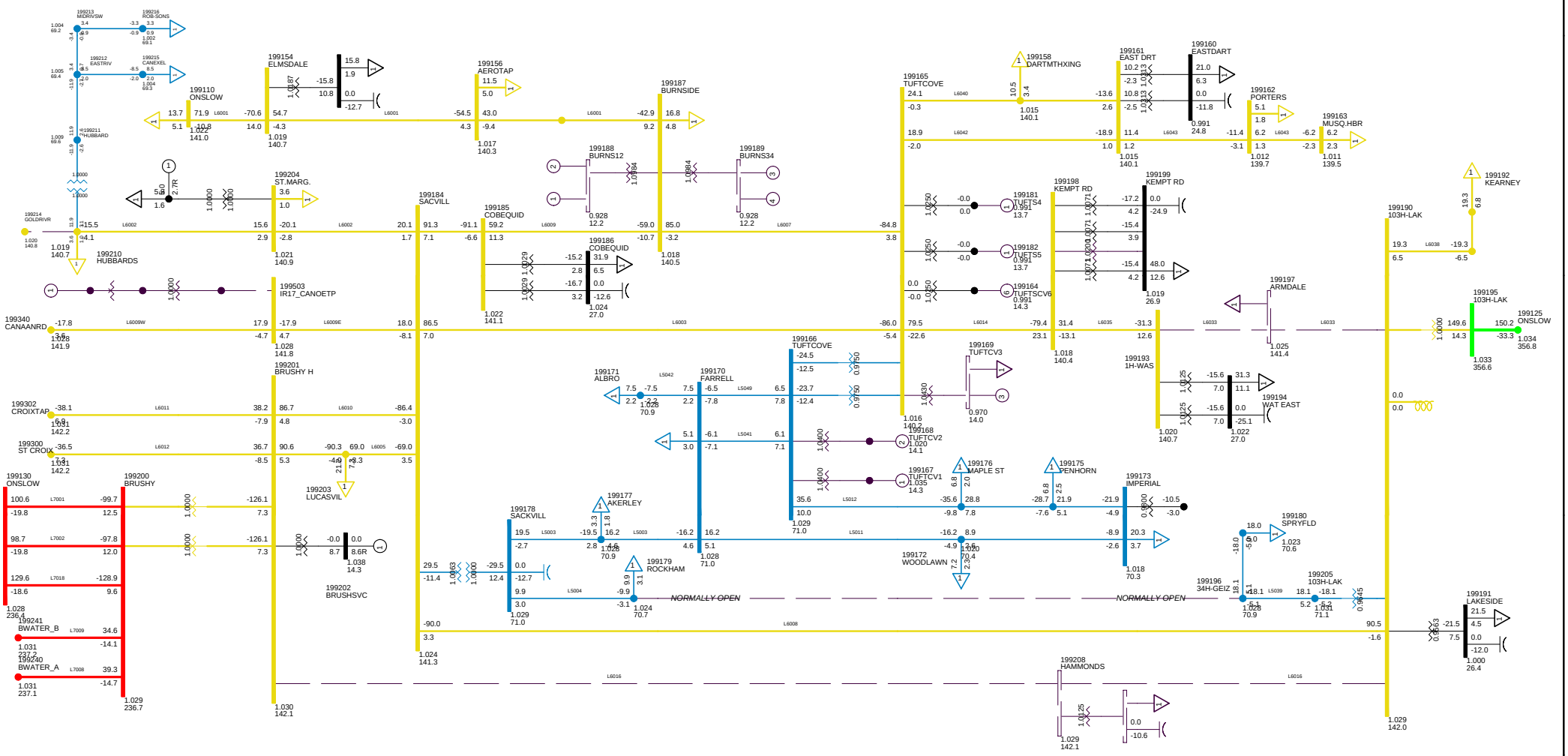

2013 LIGHT LOAD - NO TRENTON
C31 LOSE L6033
METRO ZONE TUE, DEC 09 2008 22:24

Bus - VOLTAGE (KV/PU)
Branch - MW/MVAR
Equipment - MW/MVAR
100.0%RATEA
1.050OV 0.950UV
KV: <=30.000 <=69.000 <=138.000 <=230.000 <=345.000 >345.000

Figure __

Total Wind Gen: 140.6 MW
Gross Tupper 155.0 MW
Gross Wreck Cove 50.0 MW
Gross Lingan 448.1 MW
Gross Trenton 0.0 MW
Gross Gas Turbine 0.0 MW
Gross Pt Aconi 185.0 MW
Gross Tuft's Cove 0.0 MW
Gross Small Hydro 25.0 MW
Net Stora Load 117.4 MW
Total BMPC Load 42.5 MW

NSX 0.1 MW
CBX 580.2 MW
ONI 583.9 MW
ONS 577.1 MW

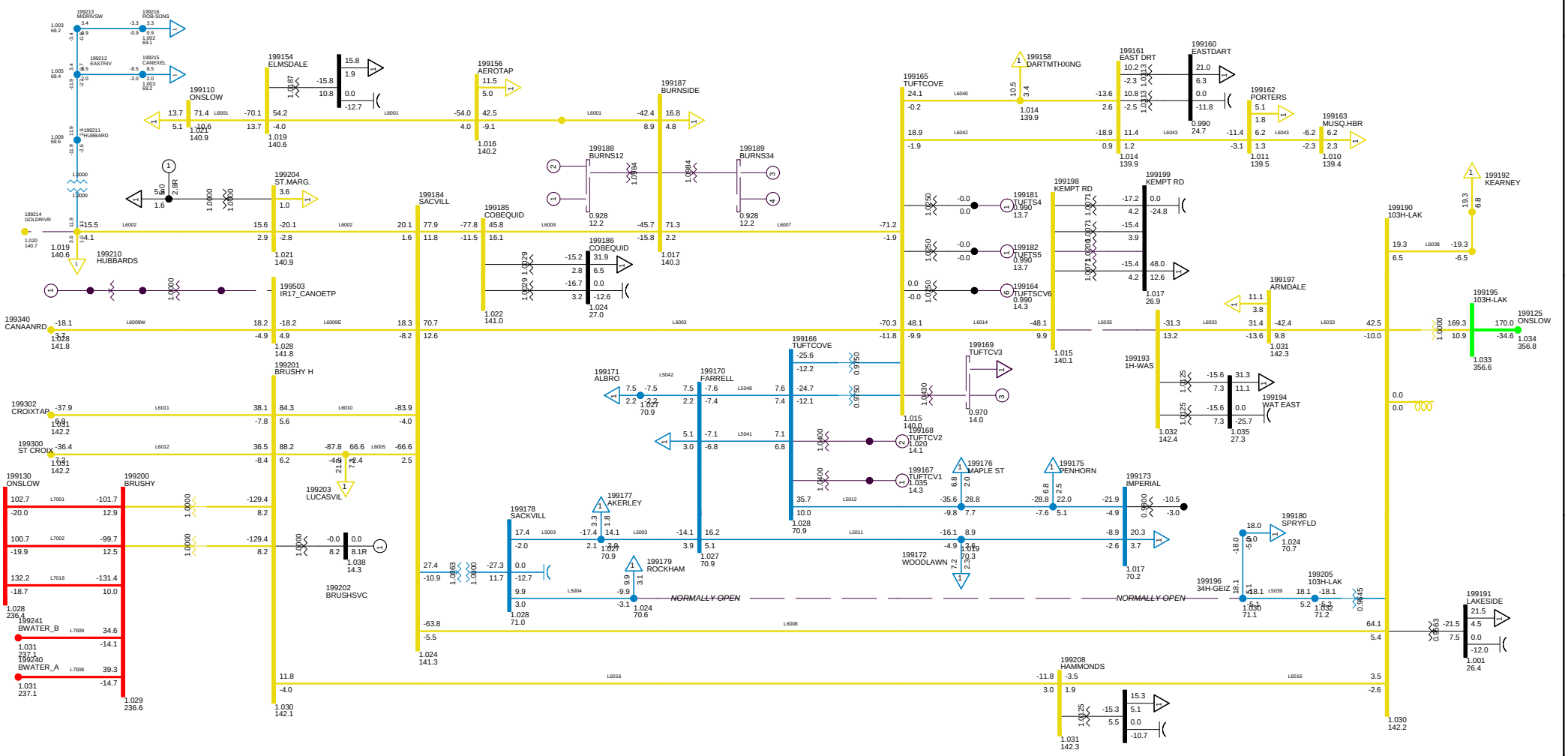

2013 LIGHT LOAD - NO TRENTON
C32 LOSE L6035
METRO ZONE TUE, DEC 09 2008 22:24

Bus - VOLTAGE (KV/PU)
Branch - MW/MVAR
Equipment - MW/MVAR
100.0%RATEA
1.050OV 0.950UV
KV: <=30.000 <=69.000 <=138.000 <=230.000 <=345.000 >345.000

Figure __

Total Wind Gen: 140.6 MW | Gross Tupper 155.0 MW | Gross Wreck Cove 50.0 MW

Gross Lingan 448.1 MW | Gross Trenton 0.0 MW | Gross Gas Turbine 0.0 MW

Gross Pt Aconi 185.0 MW | Gross Tuft's Cove 0.0 MW | Gross Small Hydro 25.0 MW

Net Stora Load 117.4 MW | Total BMPC Load 42.5 MW

NSX 13.1 MW

CBX 580.0 MW

ONI 583.6 MW

ONS 563.6 MW

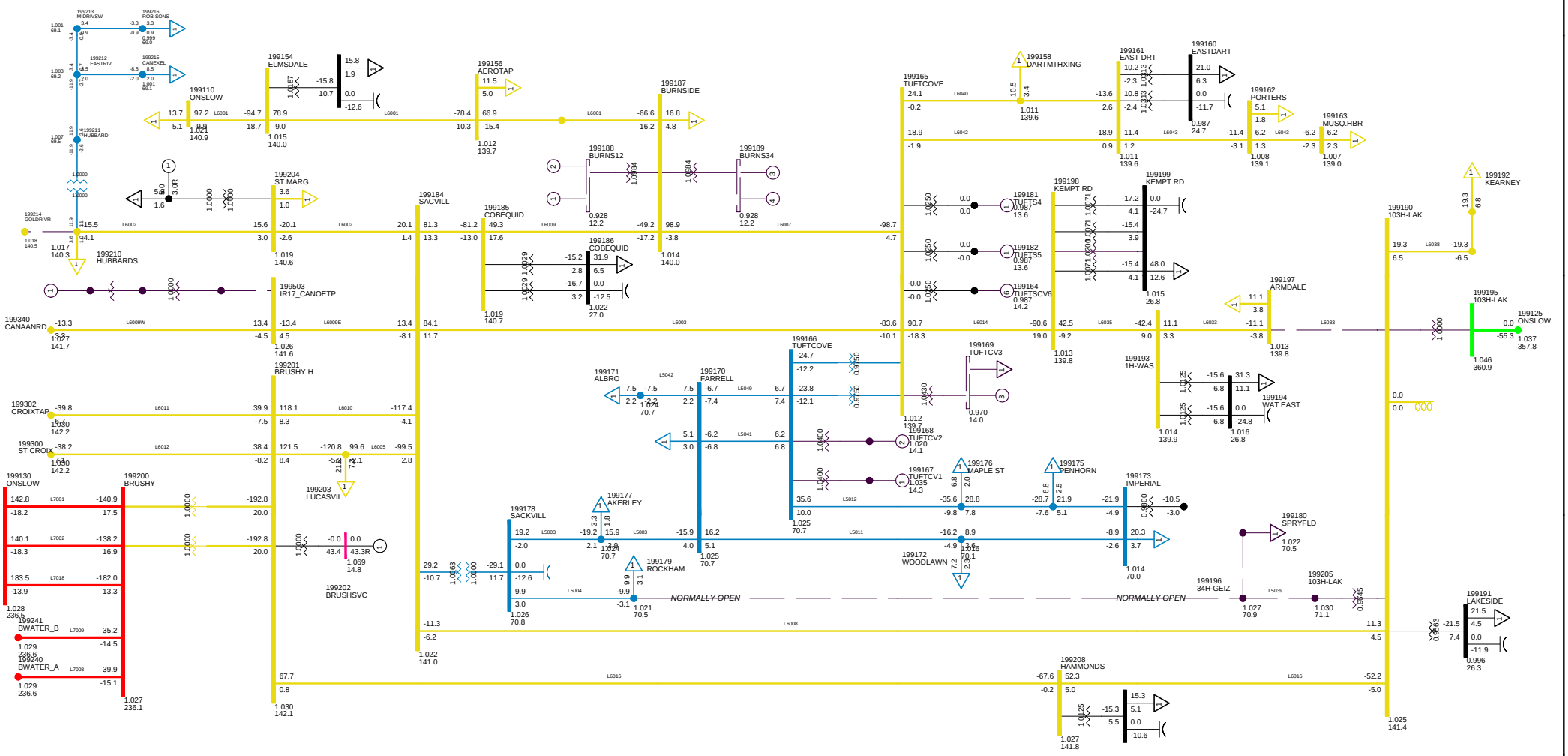

2013 LIGHT LOAD - NO TRENTON
C33 LOSE 103H-B61
METRO ZONE TUE, DEC 09 2008 22:24

Bus - VOLTAGE (KV/PU)
Branch - MW/MVAR
Equipment - MW/MVAR
100.0%RATEA
1.050OV 0.950UV
KV: <=30.000 <=69.000 <=138.000 <=230.000 <=345.000 >345.000

Figure __

Total Wind Gen: 140.6 MW | Gross Tupper 155.0 MW | Gross Wreck Cove 50.0 MW

Gross Lingan 448.1 MW | Gross Trenton 0.0 MW | Gross Gas Turbine 0.0 MW

Gross Pt Aconi 185.0 MW | Gross Tuft's Cove 0.0 MW | Gross Small Hydro 25.0 MW

Net Stora Load 117.4 MW | Total BMPC Load 42.5 MW

NSX 15.7 MW

CBX 580.1 MW

ONI 583.7 MW

ONS 561.2 MW

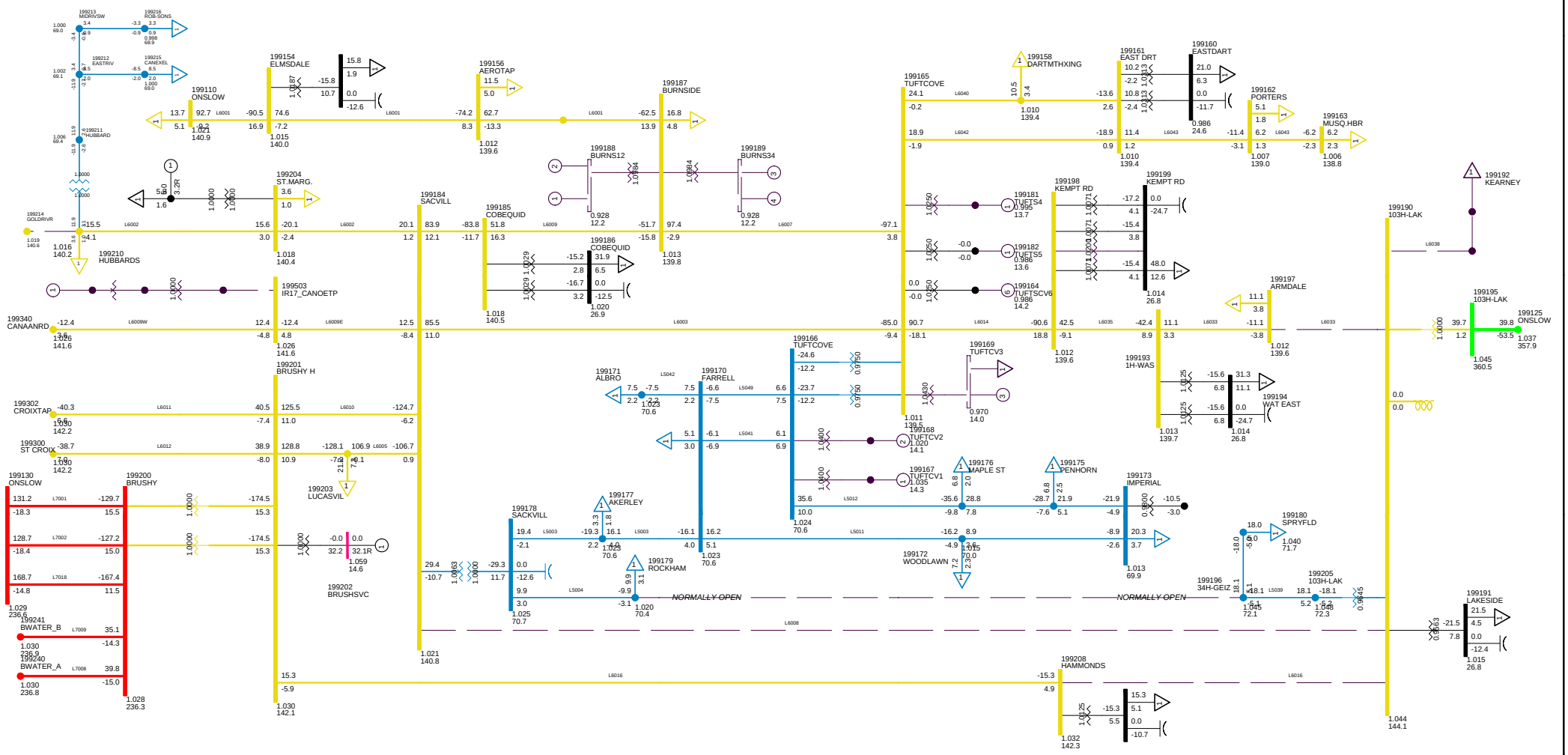

2013 LIGHT LOAD - NO TRENTON
C34 LOSE 103H-B62
METRO ZONE TUE, DEC 09 2008 22:24

Bus - VOLTAGE (KV/PU)
Branch - MW/MVAR
Equipment - MW/MVAR
100.0%RATEA
1.050OV 0.950UV
KV: <=30.000 <=69.000 <=138.000 <=230.000 <=345.000 >345.000

Figure __

Total Wind Gen: 140.6 MW | Gross Tupper 155.0 MW | Gross Wreck Cove 50.0 MW

Gross Lingan 448.1 MW | Gross Trenton 0.0 MW | Gross Gas Turbine 0.0 MW

Gross Pt Aconi 185.0 MW | Gross Tuft's Cove 0.0 MW | Gross Small Hydro 25.0 MW

Net Stora Load 117.4 MW | Total BMPC Load 42.5 MW

NSX 0.7 MW

CBX 580.2 MW

ONI 583.9 MW

ONS 576.5 MW

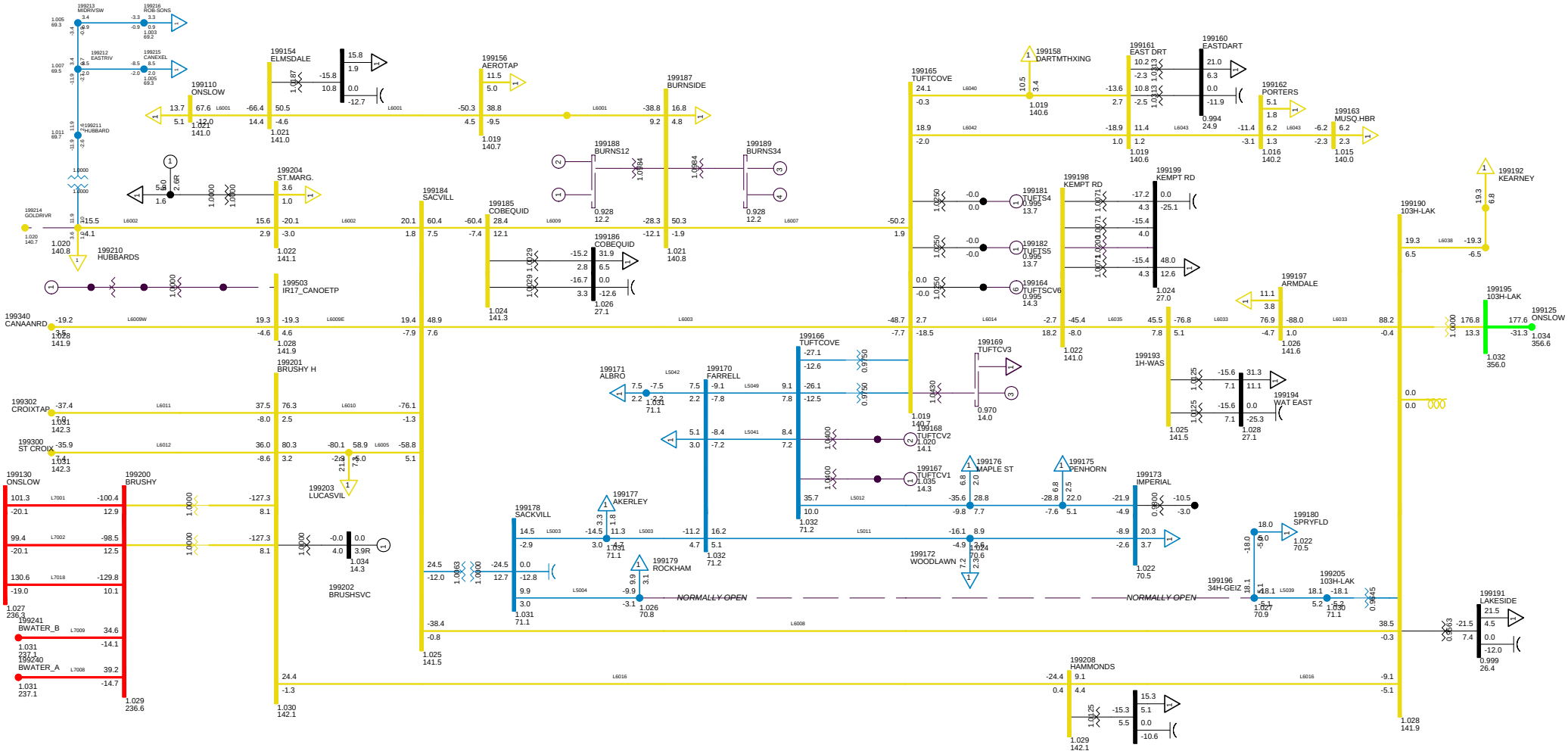

2010 LIGHT, NSLOAD=1150
NS-NB=0; NB-NE=0; CBX=580; ONI=583 ONS=576
METRO ZONE TUE, DEC 09 2008 22:24

Bus - VOLTAGE (KV/PU)
Branch - MW/MVAR
Equipment - MW/MVAR
100.0%RATEA
1.050OV 0.950UV
KV: <=30.000 <=69.000 <=138.000 <=230.000 <=345.000 >345.000

Figure __

Total Wind Gen: 140.6 MW | Gross Tupper 155.0 MW | Gross Wreck Cove 50.0 MW

Gross Lingan 448.1 MW | Gross Trenton 0.0 MW | Gross Gas Turbine 0.0 MW

Gross Pt Aconi 185.0 MW | Gross Tuft's Cove 0.0 MW | Gross Small Hydro 25.0 MW

Net Stora Load 117.4 MW | Total BMPC Load 42.5 MW

NSX 20.4 MW

CBX 580.3 MW

ONI 584.0 MW

ONS 556.8 MW

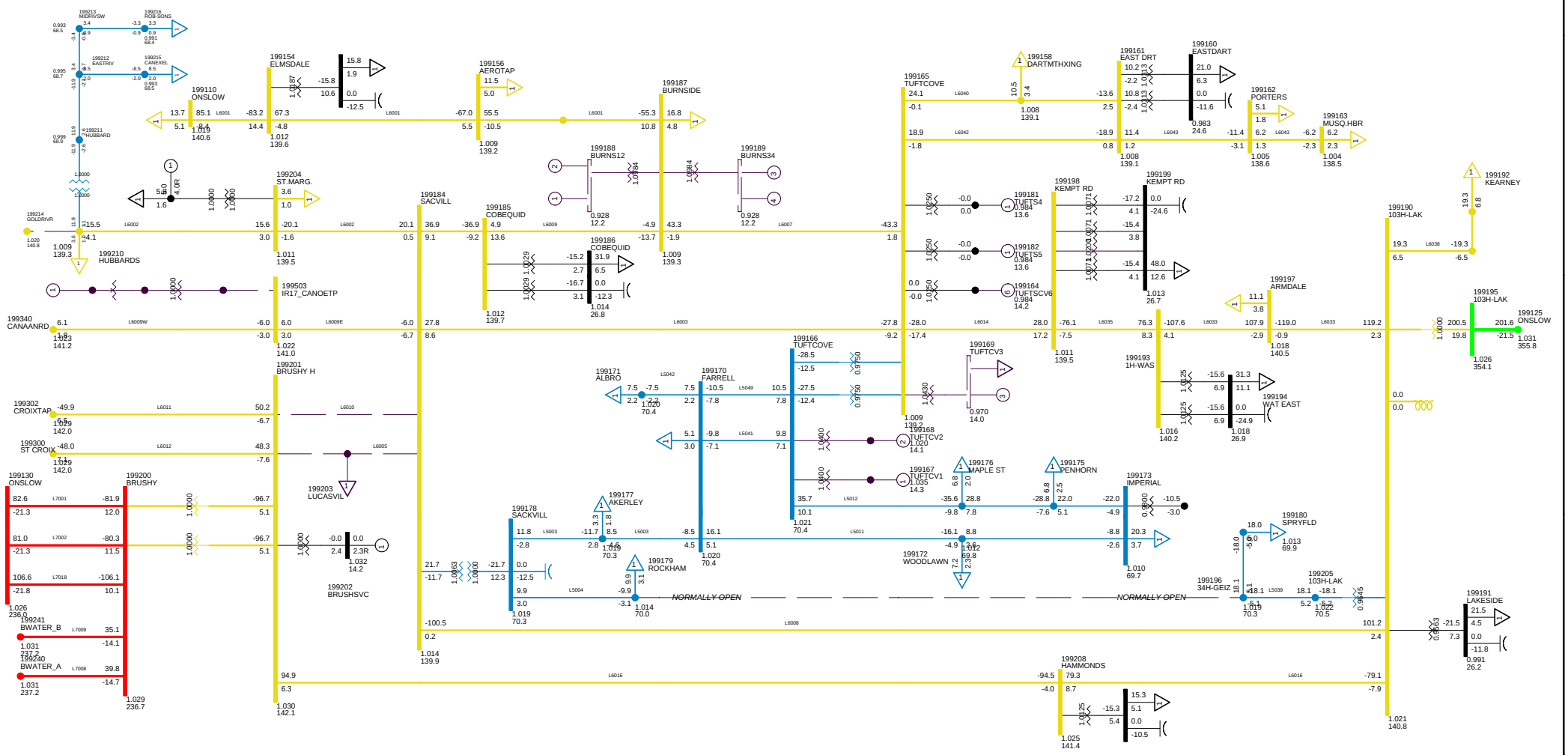

2013 LIGHT LOAD - NO TRENTON
C35 DCT L6005+L6010
METRO ZONE TUE, DEC 09 2008 22:24

Bus - VOLTAGE (KV/PU)
Branch - MW/MVAR
Equipment - MW/MVAR
100.0%RATEA
1.050OV 0.950UV
KV: <=30.000 <=69.000 <=138.000 <=230.000 <=345.000 >345.000

Figure __

Total Wind Gen: 140.6 MW | Gross Tupper 155.0 MW | Gross Wreck Cove 50.0 MW

Gross Lingan 448.1 MW | Gross Trenton 0.0 MW | Gross Gas Turbine 0.0 MW

Gross Pt Aconi 185.0 MW | Gross Tuft's Cove 0.0 MW | Gross Small Hydro 25.0 MW

Net Stora Load 117.4 MW | Total BMPC Load 42.5 MW

NSX 22.0 MW

CBX 580.3 MW

ONI 584.0 MW

ONS 555.2 MW

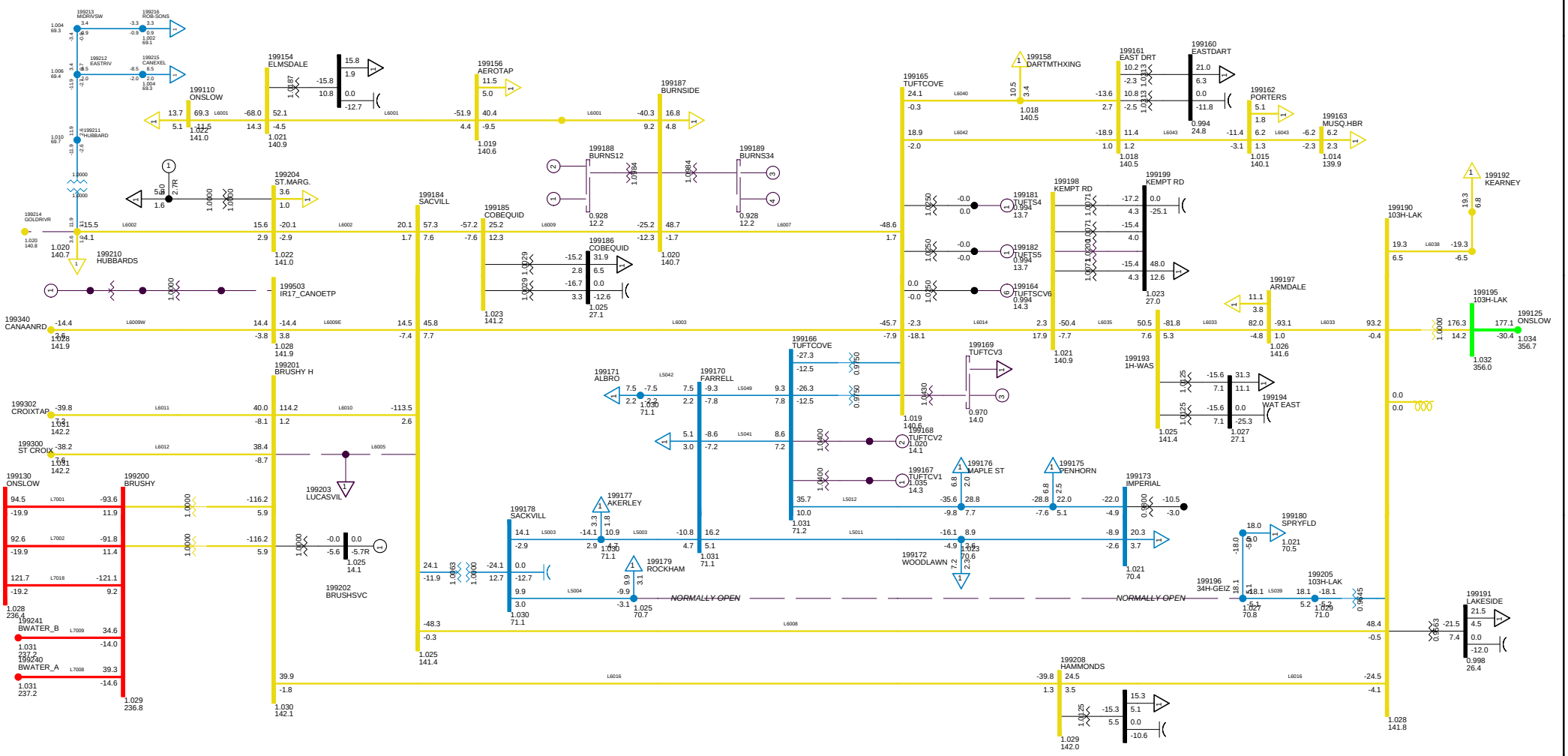

2010 LIGHT, NSLOAD=1150
NS-NB=0; NB-NE=0; CBX=580; ONI=583 ONS=576
METRO ZONE TUE, DEC 09 2008 22:24

Bus - VOLTAGE (KV/PU)
Branch - MW/MVAR
Equipment - MW/MVAR
100.0%RATEA
1.050OV 0.950UV
KV: <=30.000 <=69.000 <=138.000 <=230.000 <=345.000 >345.000

Figure __

Total Wind Gen: 140.6 MW
Gross Tupper 155.0 MW
Gross Wreck Cove 50.0 MW
Gross Lingan 448.1 MW
Gross Trenton 0.0 MW
Gross Gas Turbine 0.0 MW
Gross Pt Aconi 185.0 MW
Gross Tuft's Cove 0.0 MW
Gross Small Hydro 25.0 MW
Net Stora Load 117.4 MW
Total BMPC Load 42.5 MW

NSX 37.5 MW
CBX 580.3 MW
ONI 584.0 MW
ONS 539.8 MW

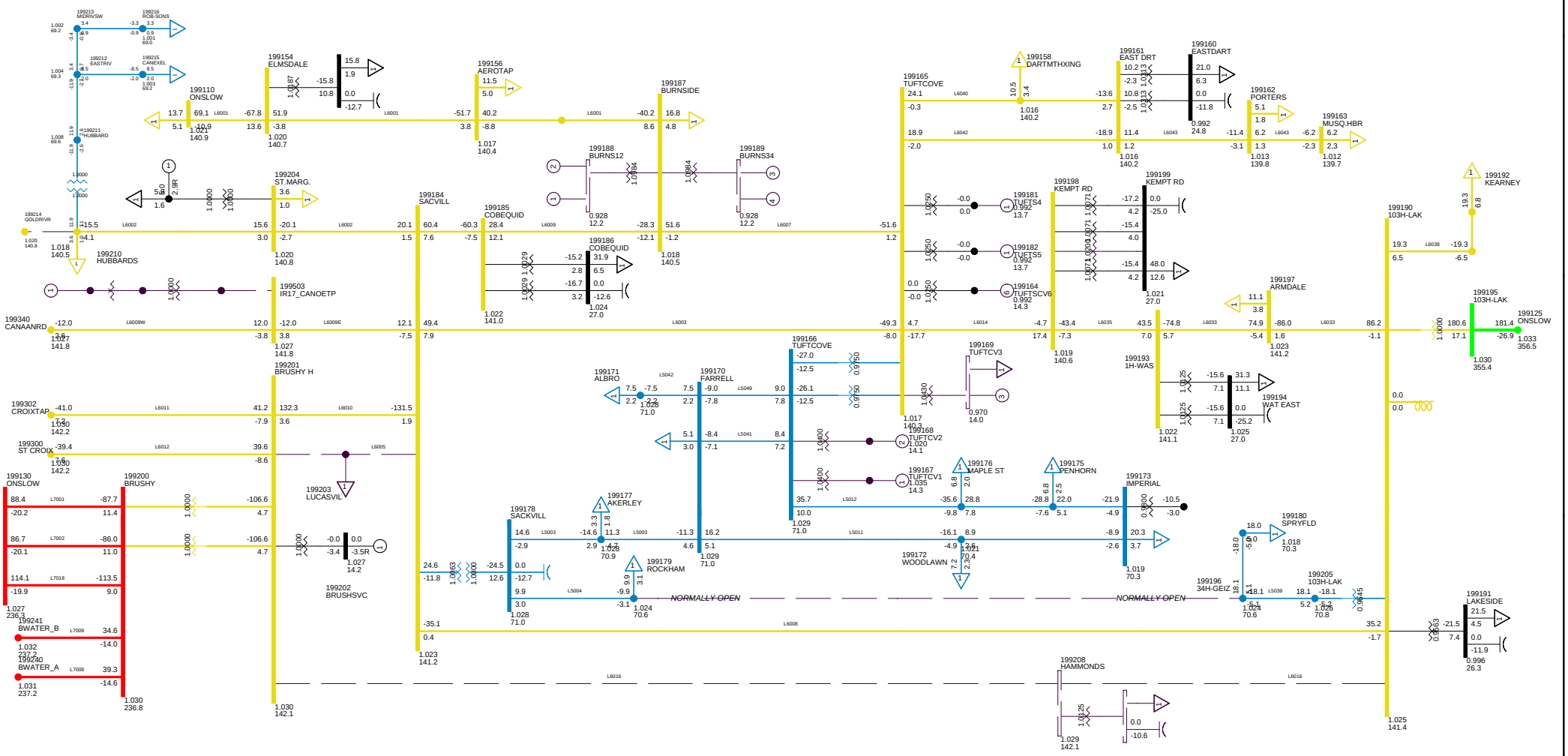

2013 LIGHT LOAD - NO TRENTON
C37 DCT L6005 L6016
METRO ZONE TUE, DEC 09 2008 22:25

Bus - VOLTAGE (KV/PU)
Branch - MW/MVAR
Equipment - MW/MVAR
100.0%RATEA
1.050OV 0.950UV
KV: <=30.000 <=69.000 <=138.000 <=230.000 <=345.000 >345.000

Figure __

Total Wind Gen: 140.6 MW | Gross Tupper 155.0 MW | Gross Wreck Cove 50.0 MW

Gross Lingan 448.1 MW | Gross Trenton 0.0 MW | Gross Gas Turbine 0.0 MW

Gross Pt Aconi 185.0 MW | Gross Tuft's Cove 0.0 MW | Gross Small Hydro 25.0 MW

Net Stora Load 117.4 MW | Total BMPC Load 42.5 MW

NSX 32.4 MW

CBX 580.2 MW

ONI 583.9 MW

ONS 544.8 MW

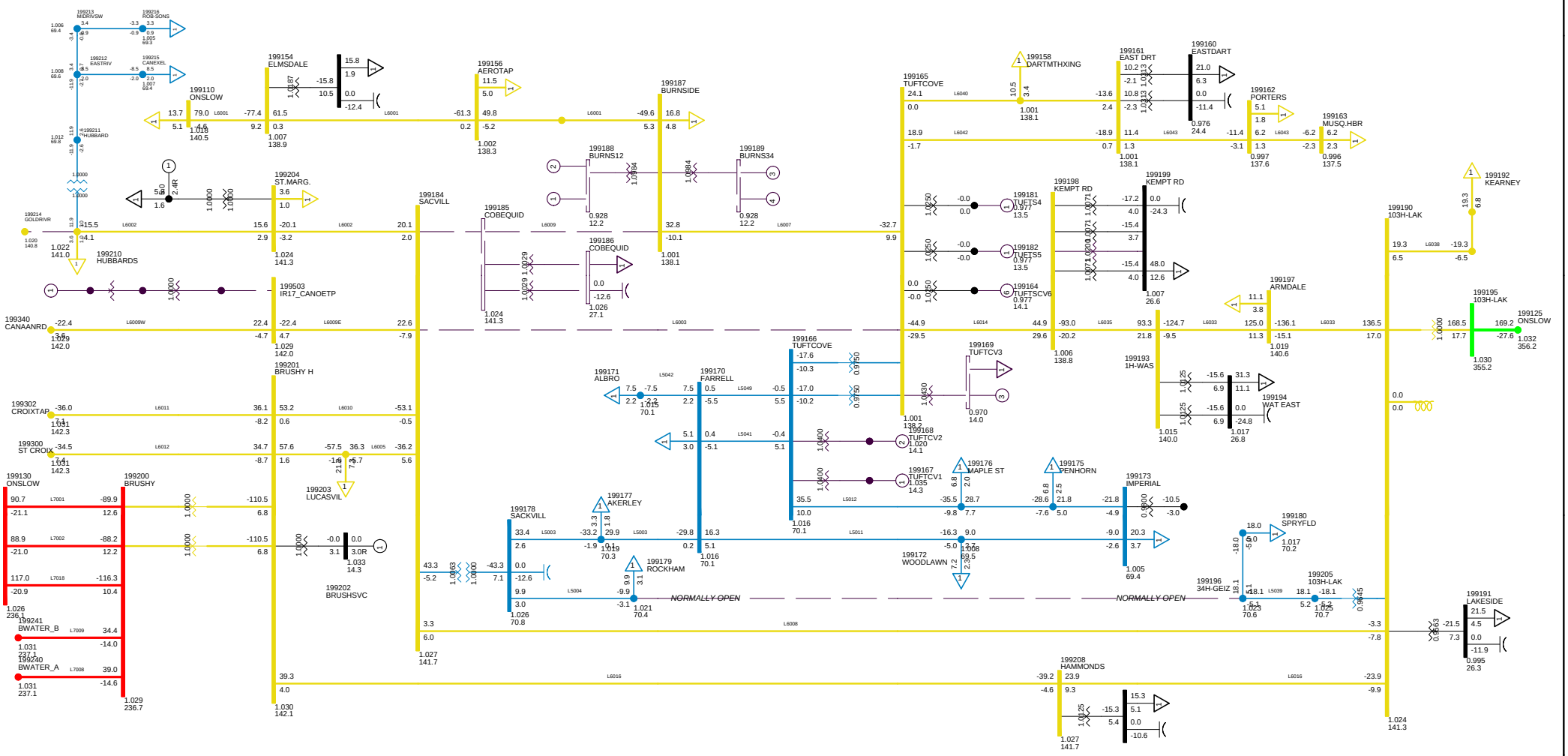

2013 LIGHT LOAD - NO TRENTON
C38 DCT L6003 L6009
METRO ZONE TUE, DEC 09 2008 22:25

Bus - VOLTAGE (KV/PU)
Branch - MW/MVAR
Equipment - MW/MVAR
100.0%RATEA
1.050OV 0.950UV
KV: <=30.000 <=69.000 <=138.000 <=230.000 <=345.000 >345.000

Figure __

Total Wind Gen: 140.6 MW | Gross Tupper 155.0 MW | Gross Wreck Cove 50.0 MW

Gross Lingan 448.1 MW | Gross Trenton 0.0 MW | Gross Gas Turbine 0.0 MW

Gross Pt Aconi 185.0 MW | Gross Tuft's Cove 0.0 MW | Gross Small Hydro 25.0 MW

Net Stora Load 117.4 MW | Total BMPC Load 42.5 MW

NSX 0.4 MW

CBX 580.2 MW

ONI 583.9 MW

ONS 576.8 MW

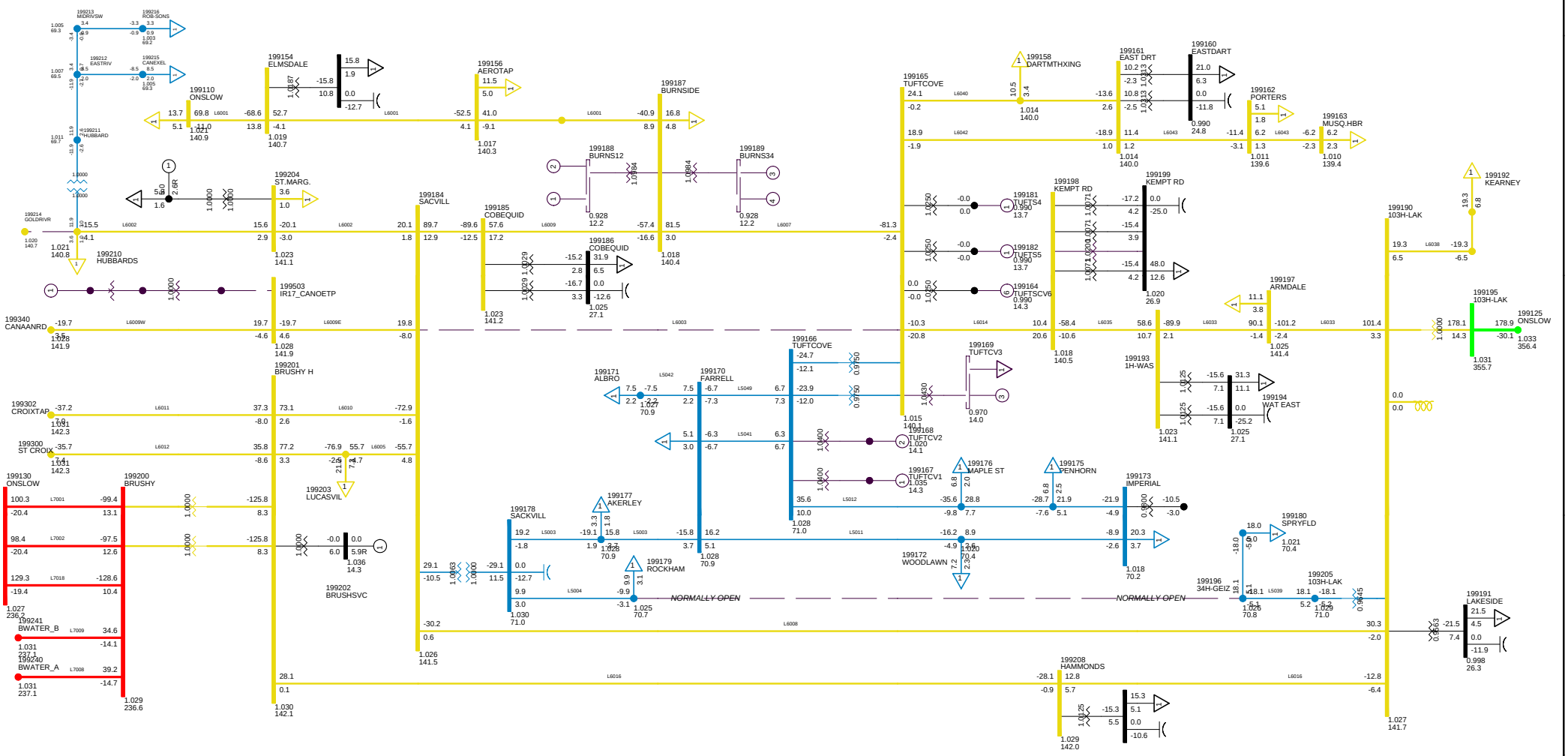

2013 LIGHT LOAD - NO TRENTON
C39 DCT L6003 L6007
METRO ZONE TUE, DEC 09 2008 22:25

Bus - VOLTAGE (KV/PU)
Branch - MW/MVAR
Equipment - MW/MVAR
100.0%RATEA
1.050OV 0.950UV
KV: <=30.000 <=69.000 <=138.000 <=230.000 <=345.000 >345.000

Figure __

Total Wind Gen: 110.0 MW | Gross Tupper 155.0 MW | Gross Wreck Cove 50.0 MW

Gross Lingan 448.1 MW | Gross Trenton 0.0 MW | Gross Gas Turbine 0.0 MW

Gross Pt Aconi 185.0 MW | Gross Tuft's Cove 0.0 MW | Gross Small Hydro 7.0 MW

Net Stora Load 117.4 MW | Total BMPC Load 0.0 MW

NSX 73.0 MW

CBX 580.3 MW

ONI 584.0 MW

ONS 504.3 MW

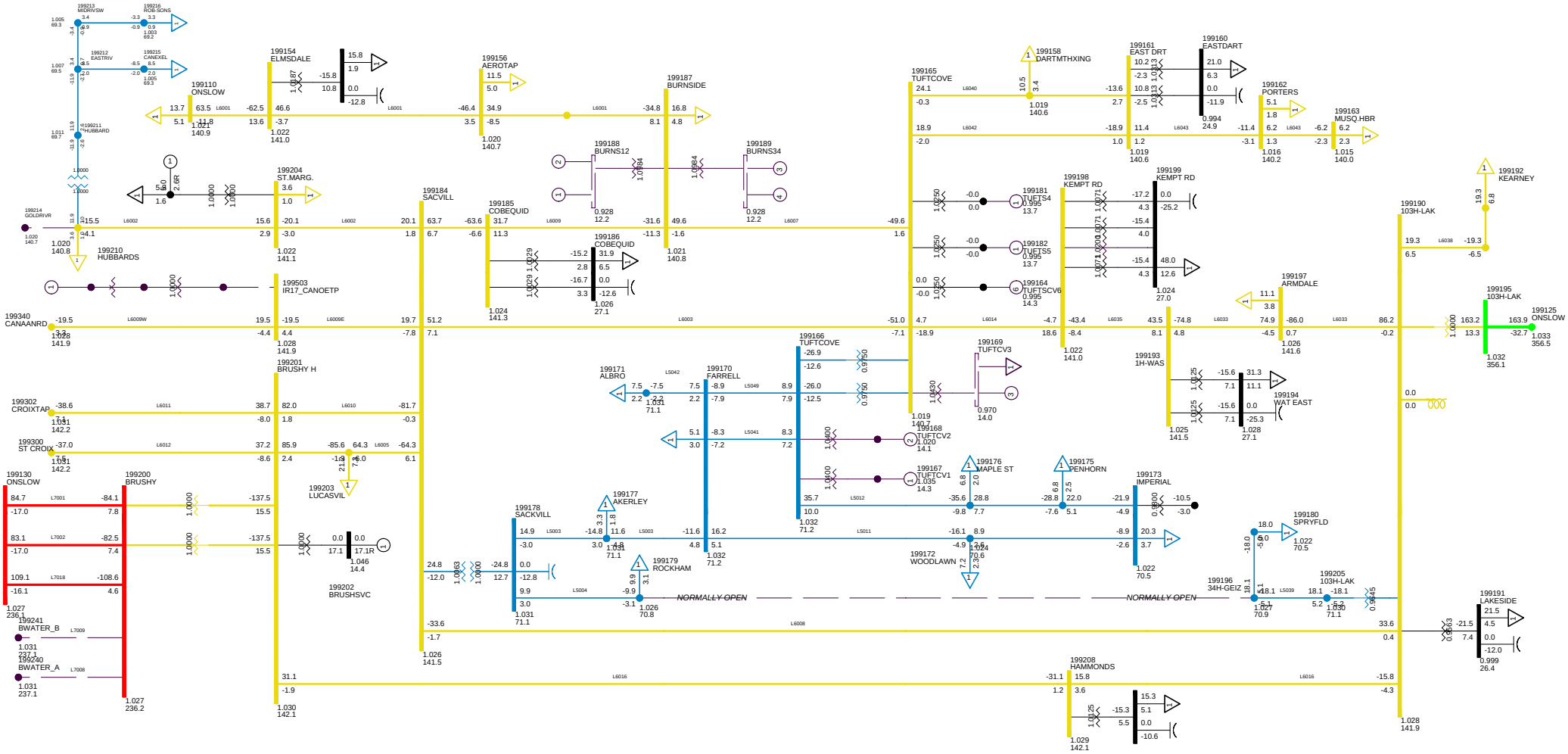

2013 LIGHT LOAD - NO TRENTON
C40 DCT L7008 L7009 ISOLATES WEST
METRO ZONE TUE, DEC 09 2008 22:25

Bus - VOLTAGE (KV/PU)
Branch - MW/MVAR
Equipment - MW/MVAR
100.0%RATEA
1.050OV 0.950UV
KV: <=30.000 <=69.000 <=138.000 <=230.000 <=345.000 >345.000

Figure __

Total Wind Gen: 140.6 MW
Gross Tupper 155.0 MW
Gross Wreck Cove 50.0 MW
Gross Lingan 448.1 MW
Gross Trenton 0.0 MW
Gross Gas Turbine 0.0 MW
Gross Pt Aconi 185.0 MW
Gross Tuft's Cove 0.0 MW
Gross Small Hydro 25.0 MW
Net Stora Load 117.4 MW
Total BMPC Load 42.5 MW

NSX 37.5 MW
CBX 580.3 MW
ONI 584.0 MW
ONS 539.8 MW

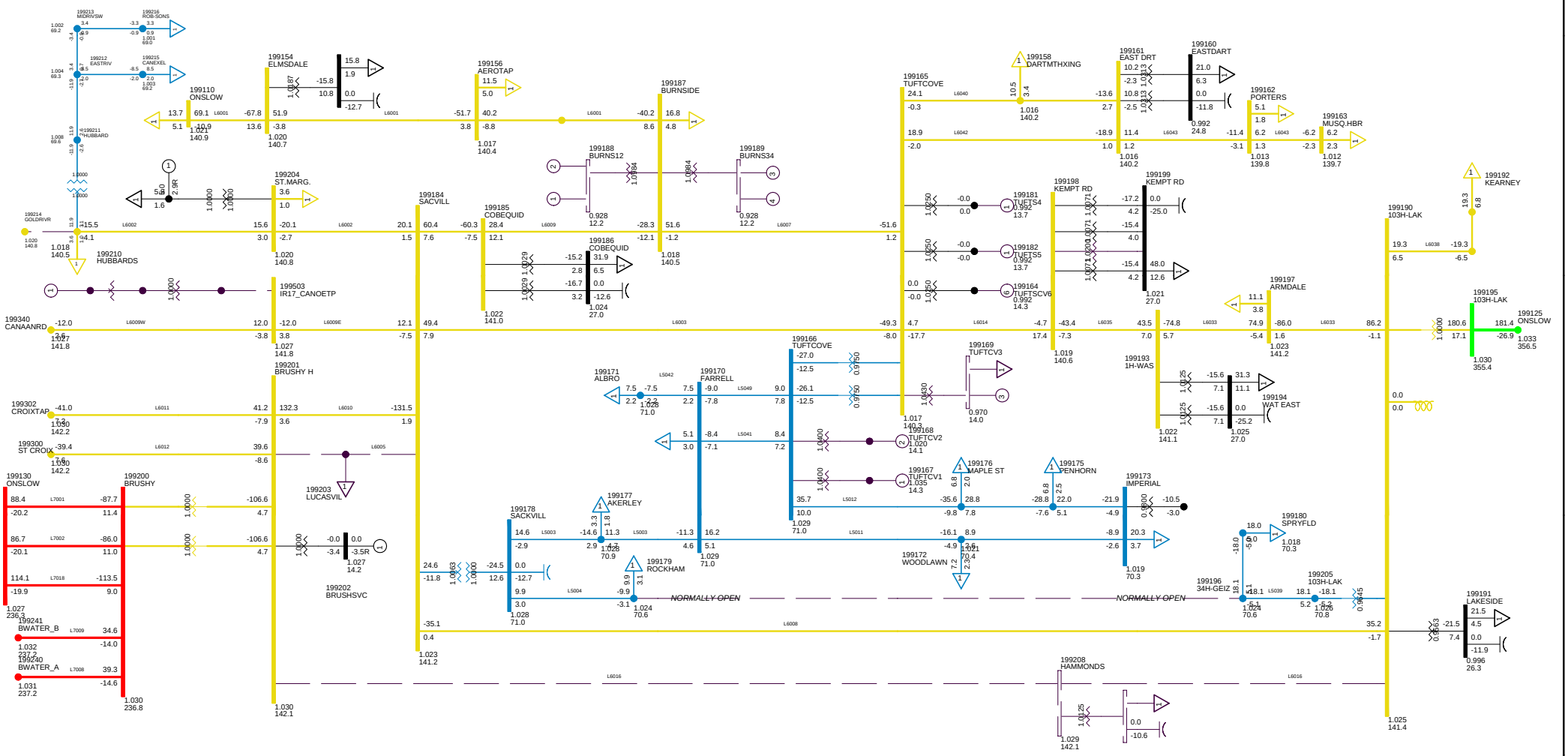

2013 LIGHT LOAD - NO TRENTON
C41 1P FAULT ON L6016, BBU 622
METRO ZONE TUE, DEC 09 2008 22:25

Bus - VOLTAGE (KV/PU)
Branch - MW/MVAR
Equipment - MW/MVAR
100.0%RATEA
1.050OV 0.950UV
KV: <=30.000 <=69.000 <=138.000 <=230.000 <=345.000 >345.000

Figure __

Total Wind Gen: 140.6 MW
Gross Tupper 155.0 MW
Gross Wreck Cove 50.0 MW
Gross Lingan 448.1 MW
Gross Trenton 0.0 MW
Gross Gas Turbine 0.0 MW
Gross Pt Aconi 185.0 MW
Gross Tuft's Cove 0.0 MW
Gross Small Hydro 25.0 MW
Net Stora Load 117.4 MW
Total BMPC Load 42.5 MW

NSX 25.0 MW
CBX 580.1 MW
ONI 583.6 MW
ONS 551.8 MW

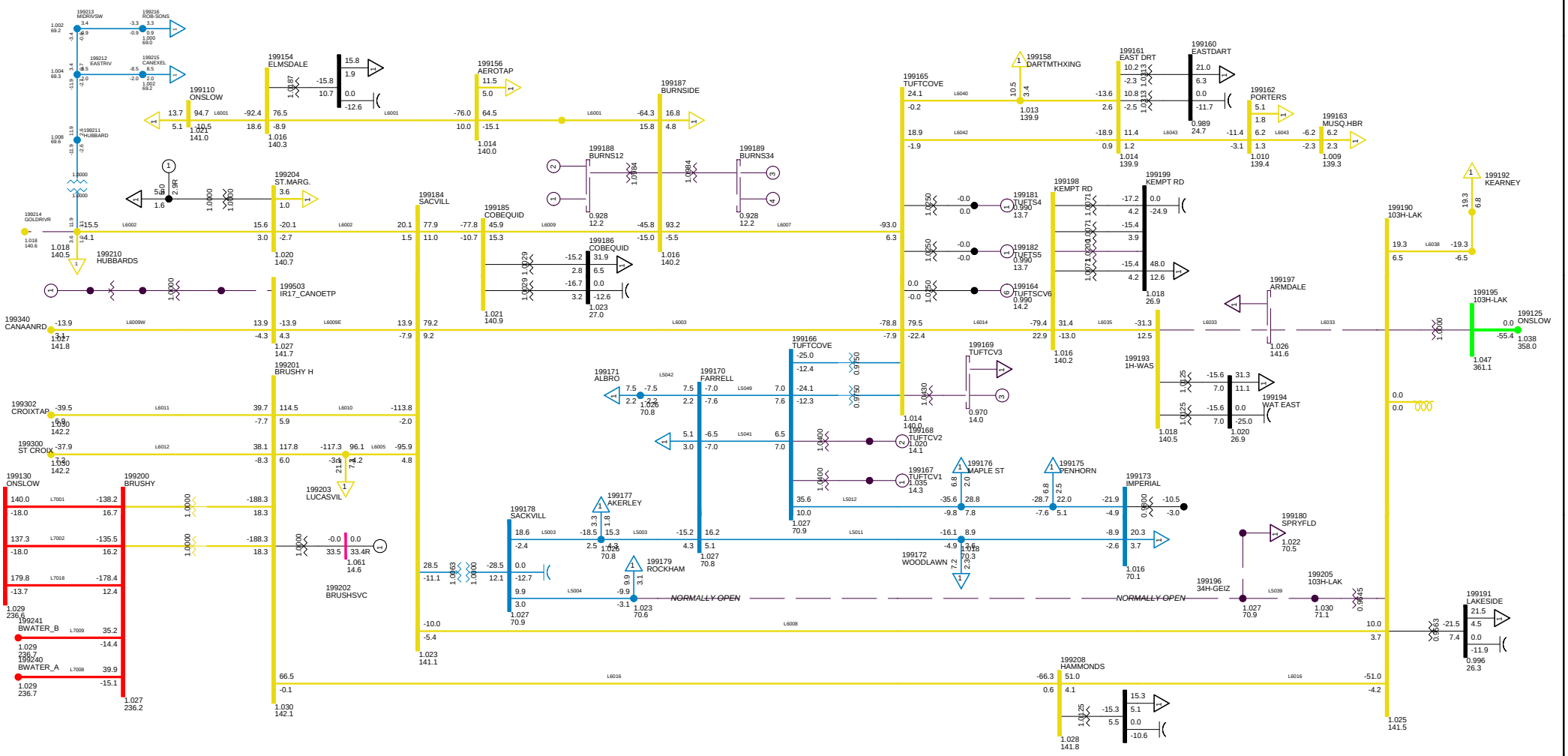

2013 LIGHT LOAD - NO TRENTON
C42 1P L6033, BBU 103H-632
METRO ZONE TUE, DEC 09 2008 22:25

Bus - VOLTAGE (KV/PU)
Branch - MW/MVAR
Equipment - MW/MVAR
100.0%RATEA
1.050OV 0.950UV
KV: <=30.000 <=69.000 <=138.000 <=230.000 <=345.000 >345.000

Figure __

Total Wind Gen: 140.6 MW | Gross Tupper 155.0 MW | Gross Wreck Cove 50.0 MW

Gross Lingan 448.1 MW | Gross Trenton 0.0 MW | Gross Gas Turbine 0.0 MW

Gross Pt Aconi 185.0 MW | Gross Tuft's Cove 0.0 MW | Gross Small Hydro 25.0 MW

Net Stora Load 117.4 MW | Total BMPC Load 42.5 MW

NSX 20.4 MW

CBX 580.3 MW

ONI 584.0 MW

ONS 556.8 MW

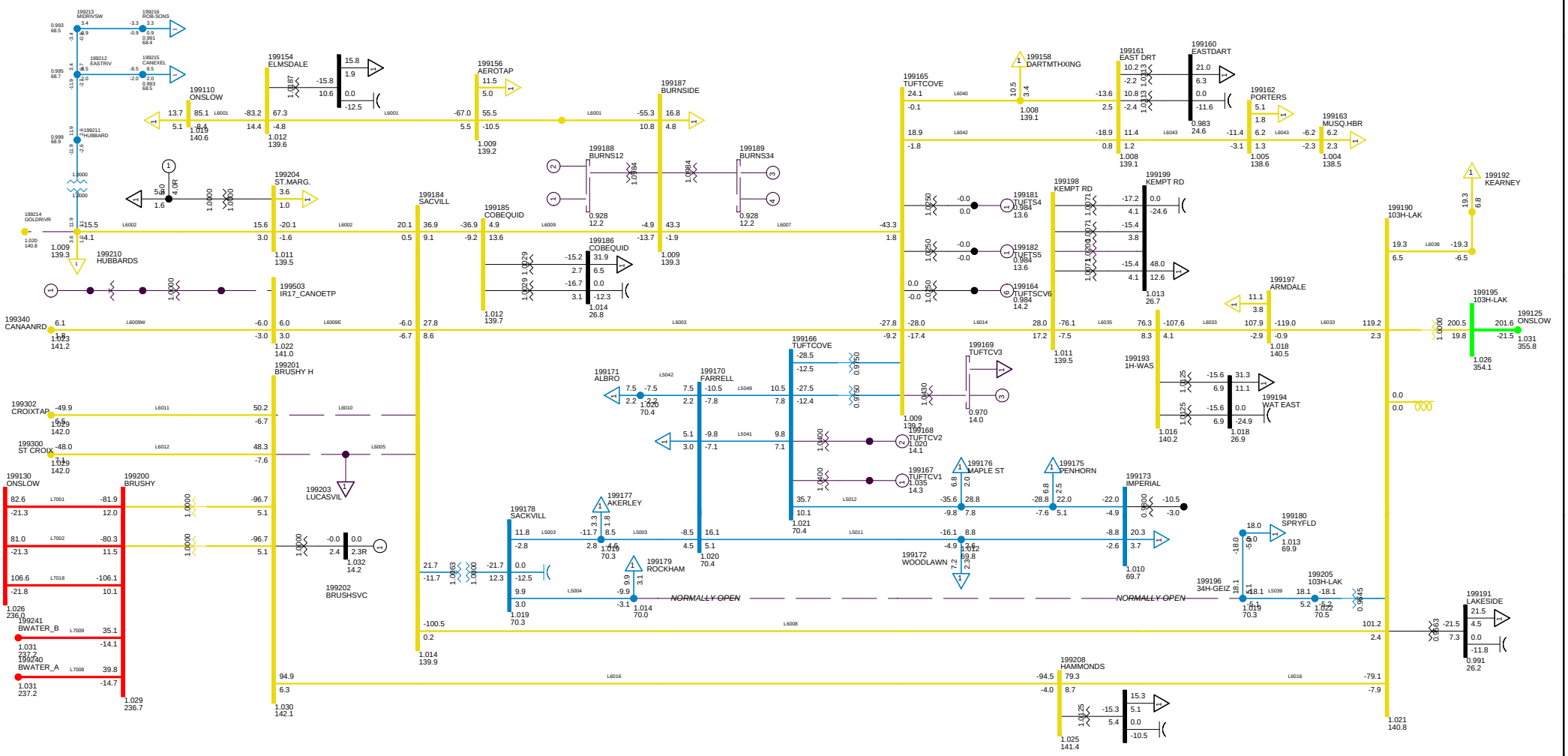

2013 LIGHT LOAD - NO TRENTON
C43 BBU L6005 L6010 90H-608
METRO ZONE TUE, DEC 09 2008 22:25

Bus - VOLTAGE (KV/PU)
Branch - MW/MVAR
Equipment - MW/MVAR
100.0%RATEA
1.050OV 0.950UV
KV: <=30.000 <=69.000 <=138.000 <=230.000 <=345.000 >345.000

Figure __

Total Wind Gen: 140.6 MW | Gross Tupper 155.0 MW | Gross Wreck Cove 50.0 MW

Gross Lingan 448.1 MW | Gross Trenton 0.0 MW | Gross Gas Turbine 0.0 MW

Gross Pt Aconi 185.0 MW | Gross Tuft's Cove 0.0 MW | Gross Small Hydro 25.0 MW

Net Stora Load 117.4 MW | Total BMPC Load 42.5 MW

NSX 33.2 MW

CBX 580.2 MW

ONI 584.0 MW

ONS 544.1 MW

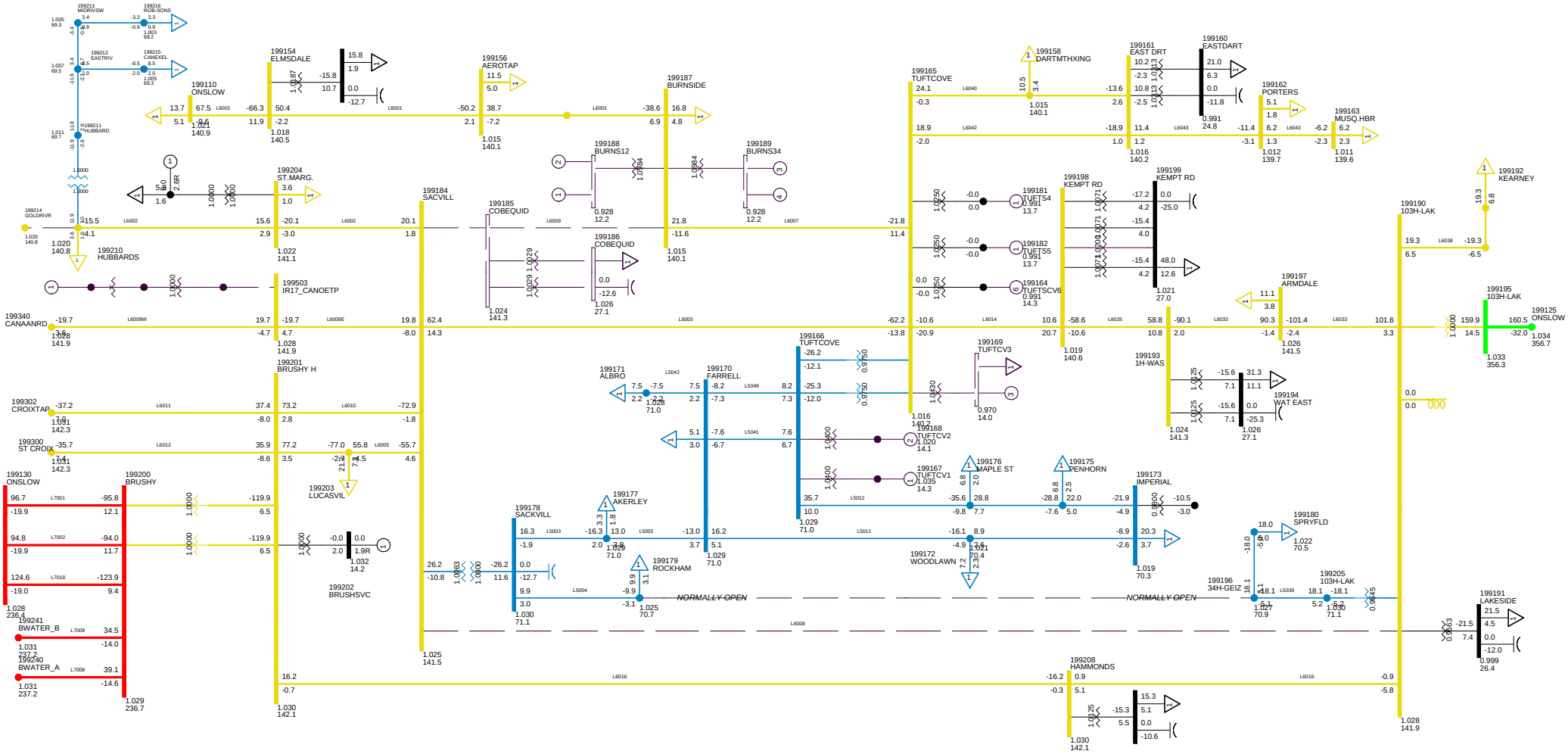

2013 LIGHT LOAD - NO TRENTON
C44 BBU L6008 L6009 90H-611
METRO ZONE TUE, DEC 09 2008 22:26

Bus - VOLTAGE (KV/PU)
Branch - MW/MVAR
Equipment - MW/MVAR
100.0%RATEA
1.050OV 0.950UV
KV: <=30.000 <=69.000 <=138.000 <=230.000 <=345.000 >345.000

Figure __

Total Wind Gen: 140.6 MW | Gross Tupper 155.0 MW | Gross Wreck Cove 50.0 MW

Gross Lingan 448.1 MW | Gross Trenton 0.0 MW | Gross Gas Turbine 0.0 MW

Gross Pt Aconi 185.0 MW | Gross Tuft's Cove 0.0 MW | Gross Small Hydro 25.0 MW

Net Stora Load 117.4 MW | Total BMPC Load 42.5 MW

NSX 58.0 MW

CBX 580.3 MW

ONI 584.0 MW

ONS 519.3 MW

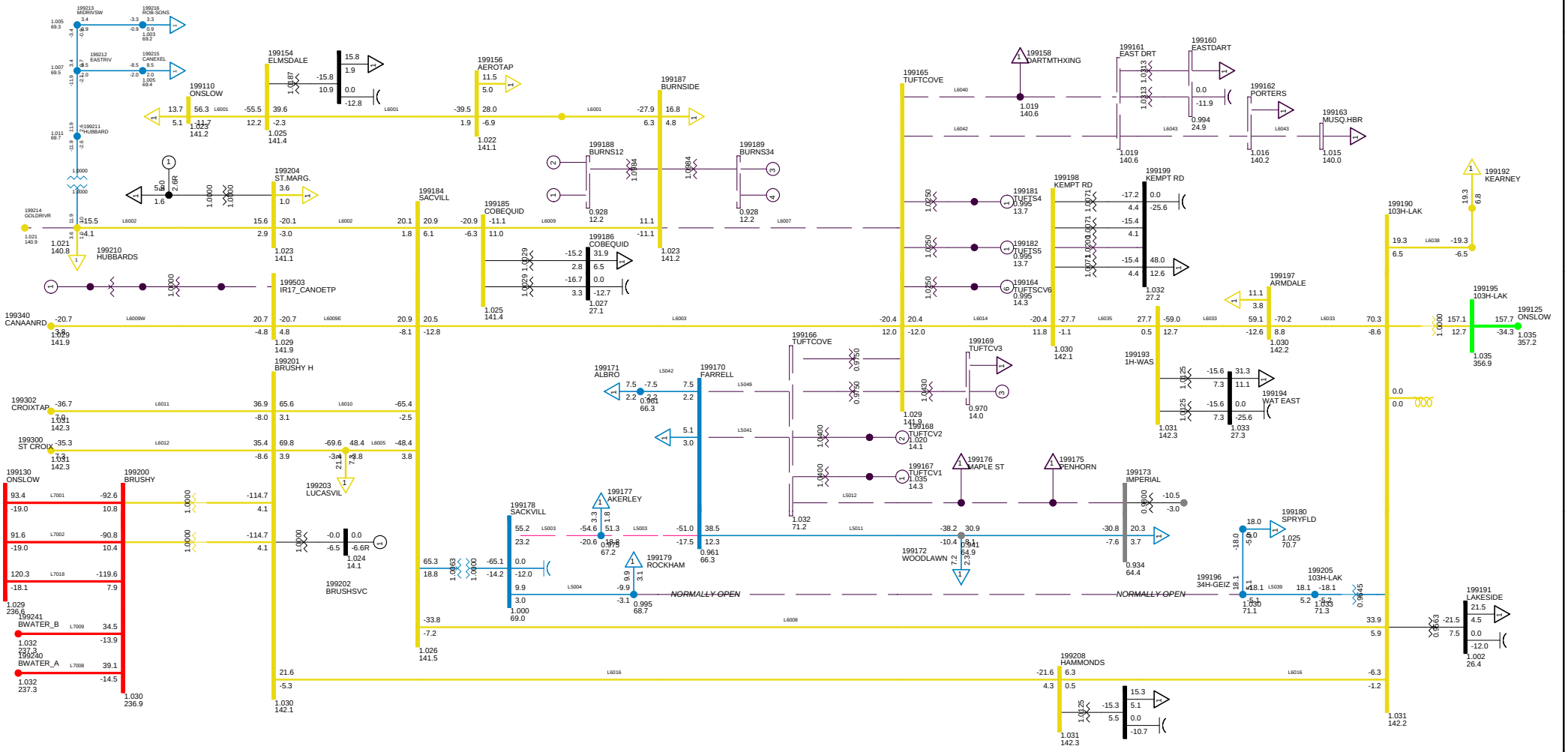

2013 LIGHT LOAD - NO TRENTON
C45 BBU ON 91H-523
METRO ZONE TUE, DEC 09 2008 22:26

Bus - VOLTAGE (KV/PU)
Branch - MW/MVAR
Equipment - MW/MVAR
100.0%RATEA
1.050OV 0.950UV
KV: <=30.000 <=69.000 <=138.000 <=230.000 <=345.000 >345.000

Figure __

Total Wind Gen: 140.6 MW
Gross Tupper 155.0 MW
Gross Wreck Cove 50.0 MW
Gross Lingan 448.1 MW
Gross Trenton 0.0 MW
Gross Gas Turbine 0.0 MW
Gross Pt Aconi 185.0 MW
Gross Tuft's Cove 0.0 MW
Gross Small Hydro 25.0 MW
Net Stora Load 117.4 MW
Total BMPC Load 42.5 MW

NSX 50.9 MW
CBX 580.3 MW
ONI 584.1 MW
ONS 526.5 MW

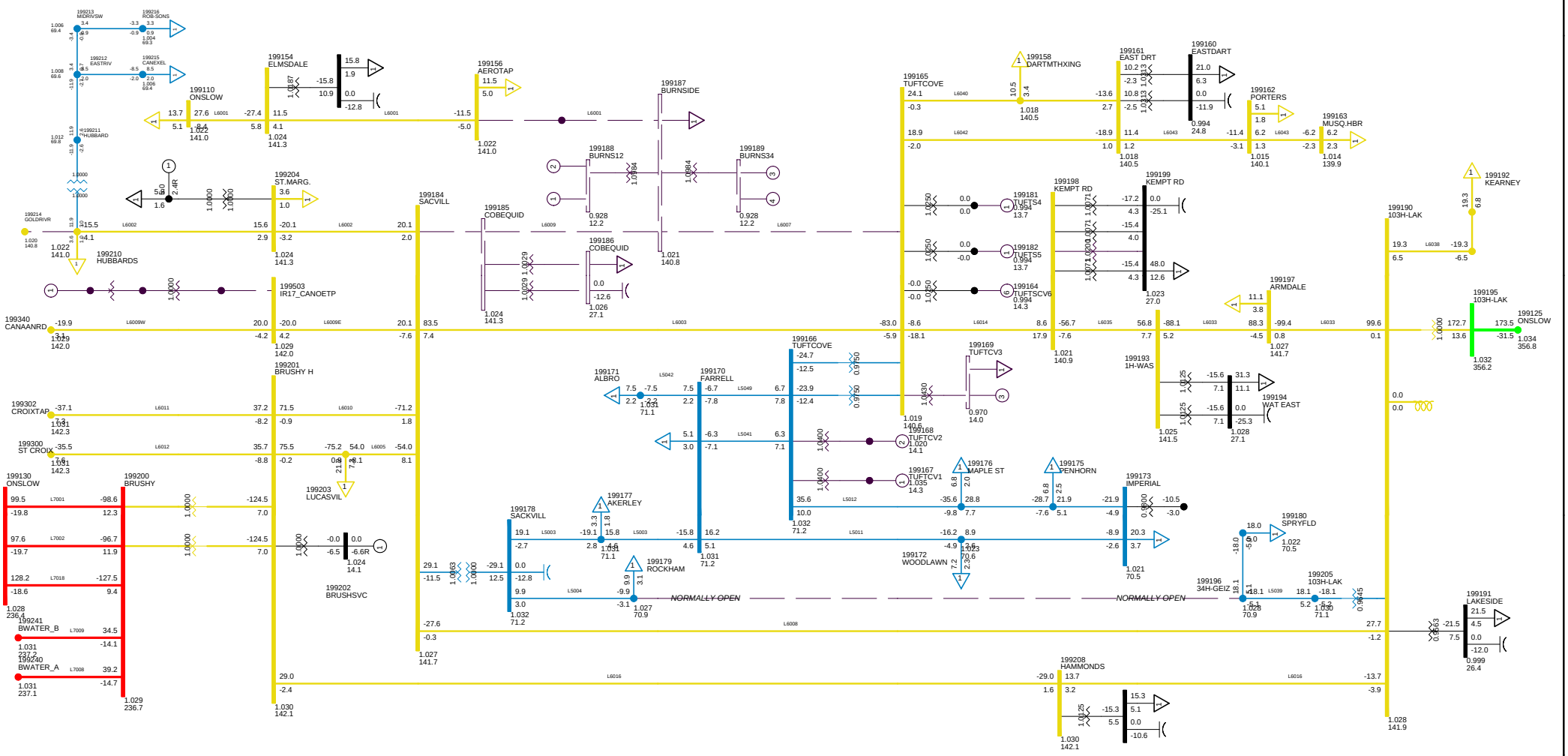

2013 LIGHT LOAD - NO TRENTON
C46 1P L6009 BBU ON 108H 607
METRO ZONE TUE, DEC 09 2008 22:26

Bus - VOLTAGE (KV/PU)
Branch - MW/MVAR
Equipment - MW/MVAR
100.0%RATEA
1.050OV 0.950UV
KV: <=30.000 <=69.000 <=138.000 <=230.000 <=345.000 >345.000

Figure __

Total Wind Gen: 140.6 MW | Gross Tupper 155.0 MW | Gross Wreck Cove 50.0 MW

Gross Lingan 448.1 MW | Gross Trenton 0.0 MW | Gross Gas Turbine 0.0 MW

Gross Pt Aconi 185.0 MW | Gross Tuft's Cove 0.0 MW | Gross Small Hydro 25.0 MW

Net Stora Load 117.4 MW | Total BMPC Load 42.5 MW

NSX 55.5 MW

CBX 580.1 MW

ONI 583.7 MW

ONS 521.4 MW

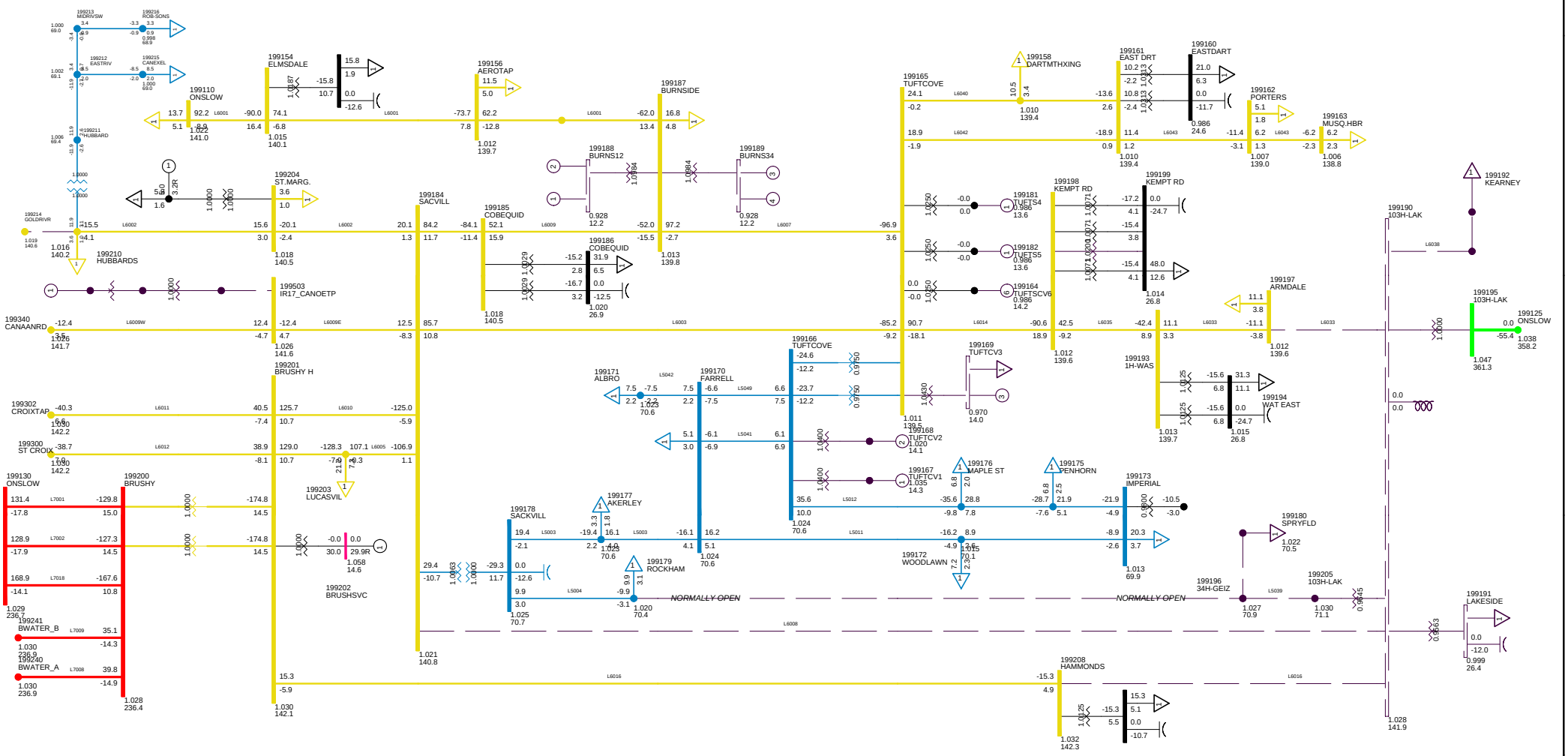

2013 LIGHT LOAD - NO TRENTON
C47 1P 103H-600
METRO ZONE TUE, DEC 09 2008 22:26

Bus - VOLTAGE (KV/PU)
Branch - MW/MVAR
Equipment - MW/MVAR
100.0%RATEA
1.050OV 0.950UV
KV: <=30.000 <=69.000 <=138.000 <=230.000 <=345.000 >345.000

Figure __

Total Wind Gen: 140.6 MW | Gross Tupper 155.0 MW | Gross Wreck Cove 50.0 MW

Gross Lingan 448.1 MW | Gross Trenton 0.0 MW | Gross Gas Turbine 0.0 MW

Gross Pt Aconi 185.0 MW | Gross Tuft's Cove 0.0 MW | Gross Small Hydro 25.0 MW

Net Stora Load 117.4 MW | Total BMPC Load 42.5 MW

NSX 0.6 MW

CBX 580.2 MW

ONI 583.9 MW

ONS 576.6 MW

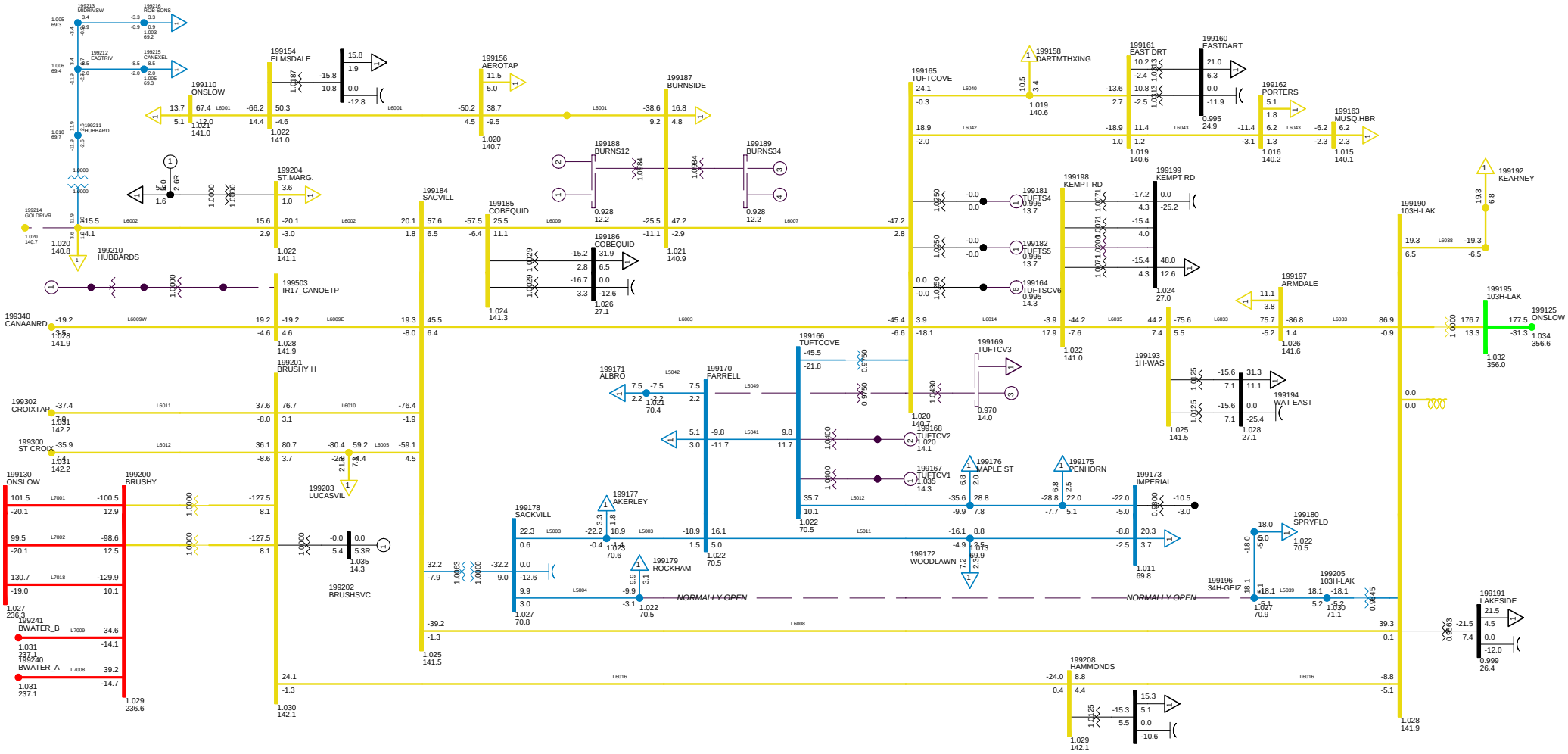

2013 LIGHT LOAD - NO TRENTON
C48 1P ON BREAKER 91H-523
METRO ZONE TUE, DEC 09 2008 22:26

Bus - VOLTAGE (KV/PU)
Branch - MW/MVAR
Equipment - MW/MVAR
100.0%RATEA
1.050OV 0.950UV
KV: <=30.000 <=69.000 <=138.000 <=230.000 <=345.000 >345.000

Figure __

Total Wind Gen: 140.6 MW
Gross Tupper 155.0 MW
Gross Wreck Cove 50.0 MW
Gross Lingan 448.1 MW
Gross Trenton 0.0 MW
Gross Gas Turbine 0.0 MW
Gross Pt Aconi 185.0 MW
Gross Tuft's Cove 0.0 MW
Gross Small Hydro 25.0 MW
Net Stora Load 117.4 MW
Total BMPC Load 42.5 MW

NSX 50.0 MW
CBX 580.3 MW
ONI 584.0 MW
ONS 527.3 MW

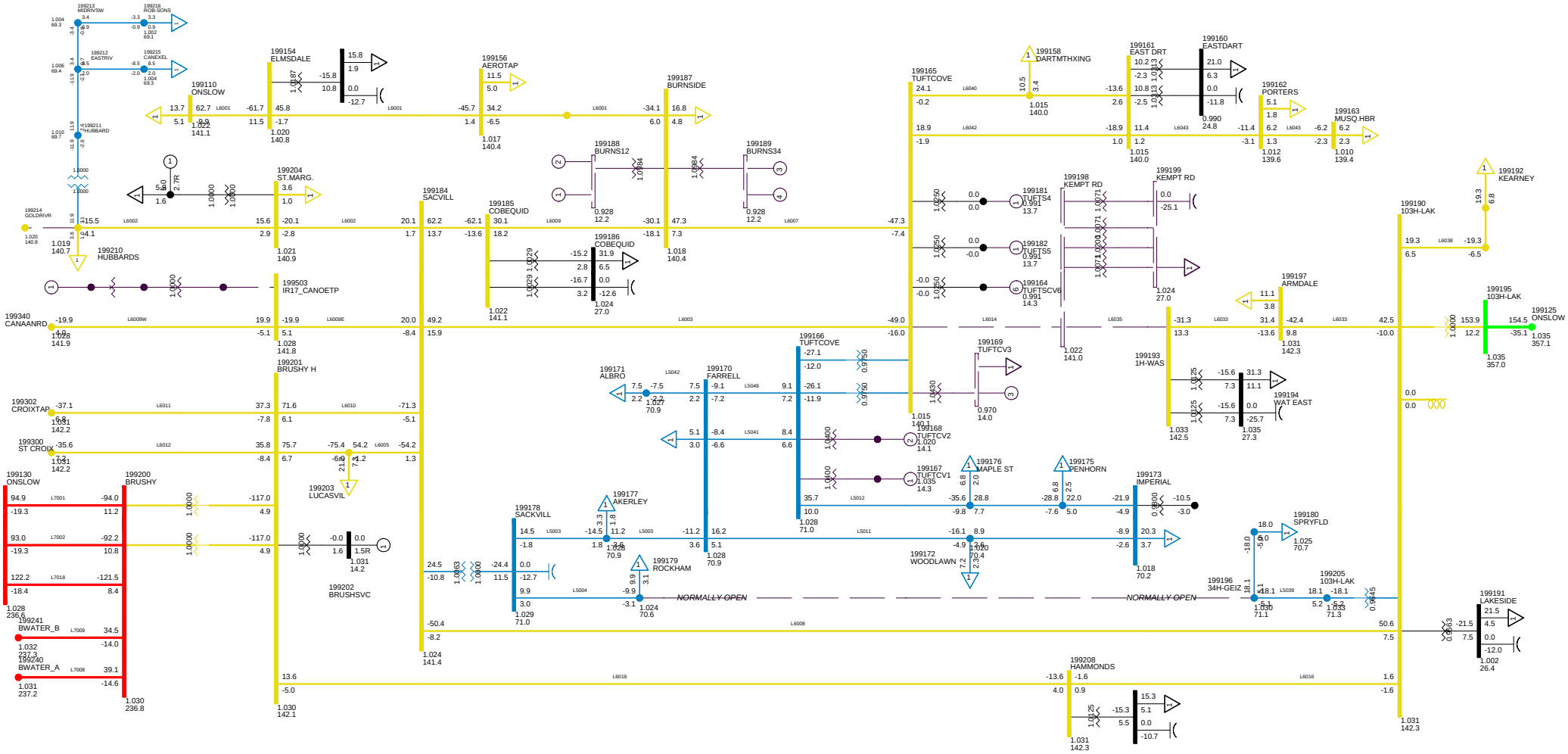

2013 LIGHT LOAD - NO TRENTON
C49 1-PH ON 104H-600
METRO ZONE TUE, DEC 09 2008 22:26

Bus - VOLTAGE (KV/PU)
Branch - MW/MVAR
Equipment - MW/MVAR
100.0%RATEA
1.050OV 0.950UV
KV: <=30.000 <=69.000 <=138.000 <=230.000 <=345.000 >345.000

Figure __

NSX 0.7 MW

CBX 580.2 MW

ONI 583.9 MW

ONS 576.5 MW

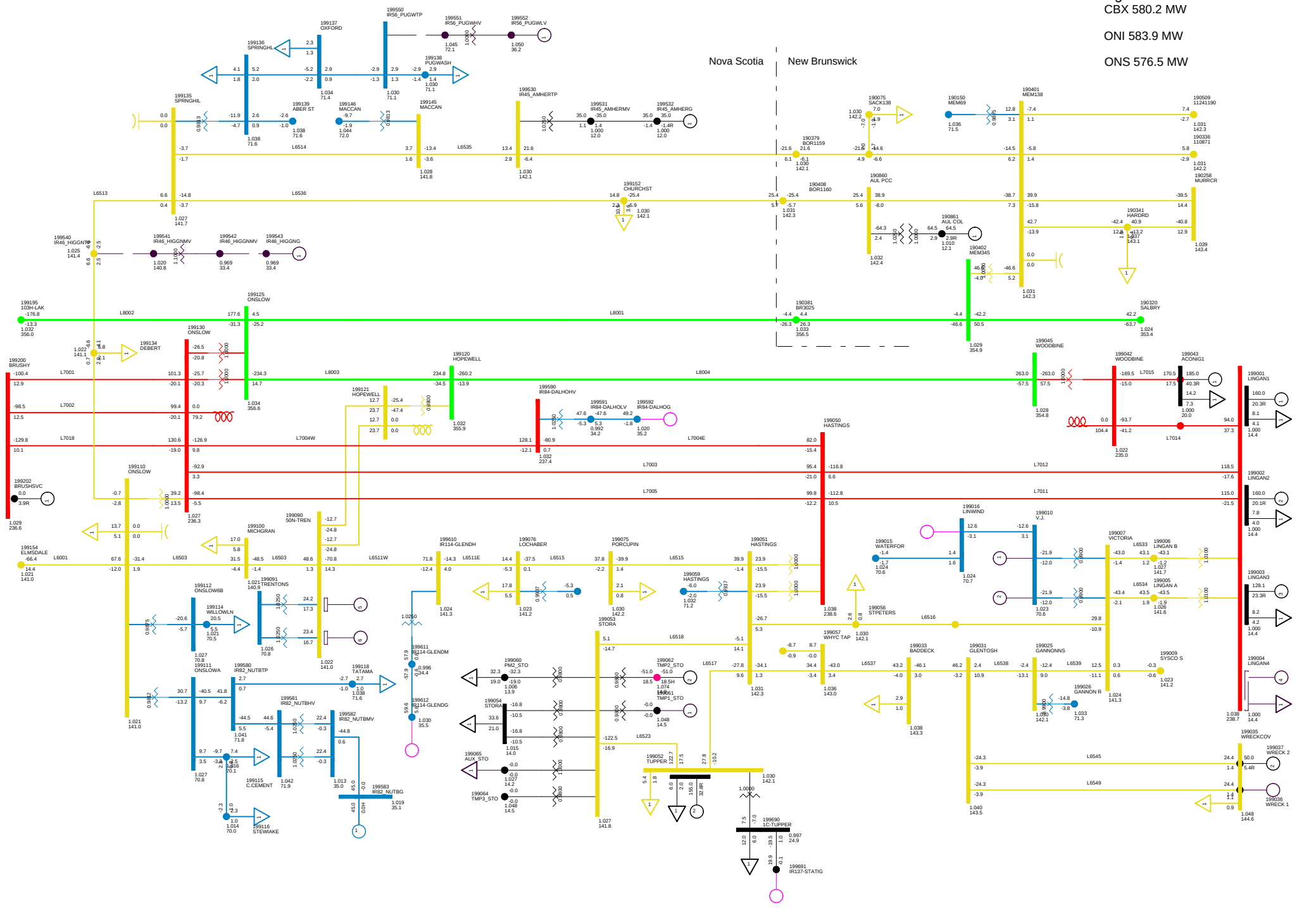

2010 LIGHT, NSLOAD=1150
NS-NB=0; NB-NE=0; CBX=580; ONI=583 ONS=576
NORTHEASTERN NS TUE, DEC 09 2008 22:26

Total Wind Gen: 140.6 MW
Gross Lingan 448.1 MW
Gross Pt Aconi 185.0 MW
Gross Tupper 155.0 MW
Gross Trenton 0.0 MW
Gross Tuft's Cove 0.0 MW
Gross Wreck Cove 50.0 MW
Gross Gas Turbine 0.0 MW
Gross Small Hydro 25.0 MW
Net Stora Load 117.4 MW
Total BMPC Load 42.5 MW

Bus - VOLTAGE (KV/PU)
Branch - MW/MVAR
Equipment - MW/MVAR
110.0%RATEA
1.050UV 0.950UV
KV: <=25.000 <=69.000 <=138.000 <=230.000 <=345.000 >345.000

Figure ___

NSX -30.1 MW

CBX 564.0 MW

ONI 554.7 MW

ONS 577.8 MW

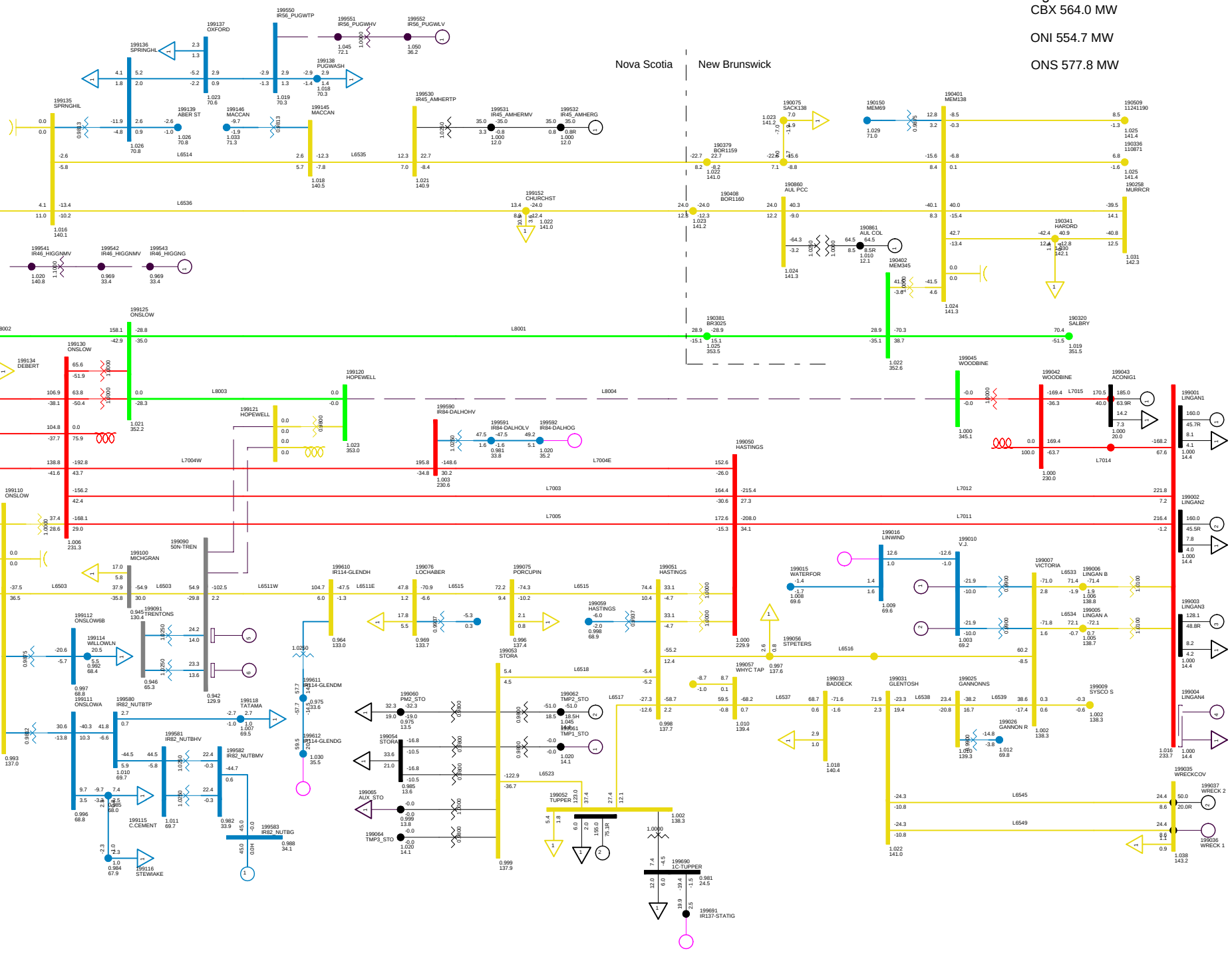

2013 LIGHT LOAD - NO TRENTON
C50 1P FAULT ON L6507, BBU 79N-606
NORTHEASTERN NS TUE, DEC 09 2008 22:26

Total Wind Gen: 140.6 MW | Gross Tupper 155.0 MW | Gross Wreck Cove 50.0 MW | Net Stora Load 117.4 MW
Gross Lingan 448.1 MW | Gross Trenton 0.0 MW | Gross Gas Turbine 0.0 MW | Total BMPC Load 42.5 MW
Gross Pt Aconi 185.0 MW | Gross Tuft's Cove 0.0 MW | Gross Small Hydro 25.0 MW

Bus - VOLTAGE (KV/PU)
Branch - MW/MVAR
Equipment - MW/MVAR
110.0%RATEA
1.050OV 0.950UV
KV: <=25.000 <=69.000 <=138.000 <=230.000 <=345.000 >345.000

Figure ___

NSX 3.9 MW
CBX 580.2 MW
ONI 584.0 MW
ONS 577.0 MW

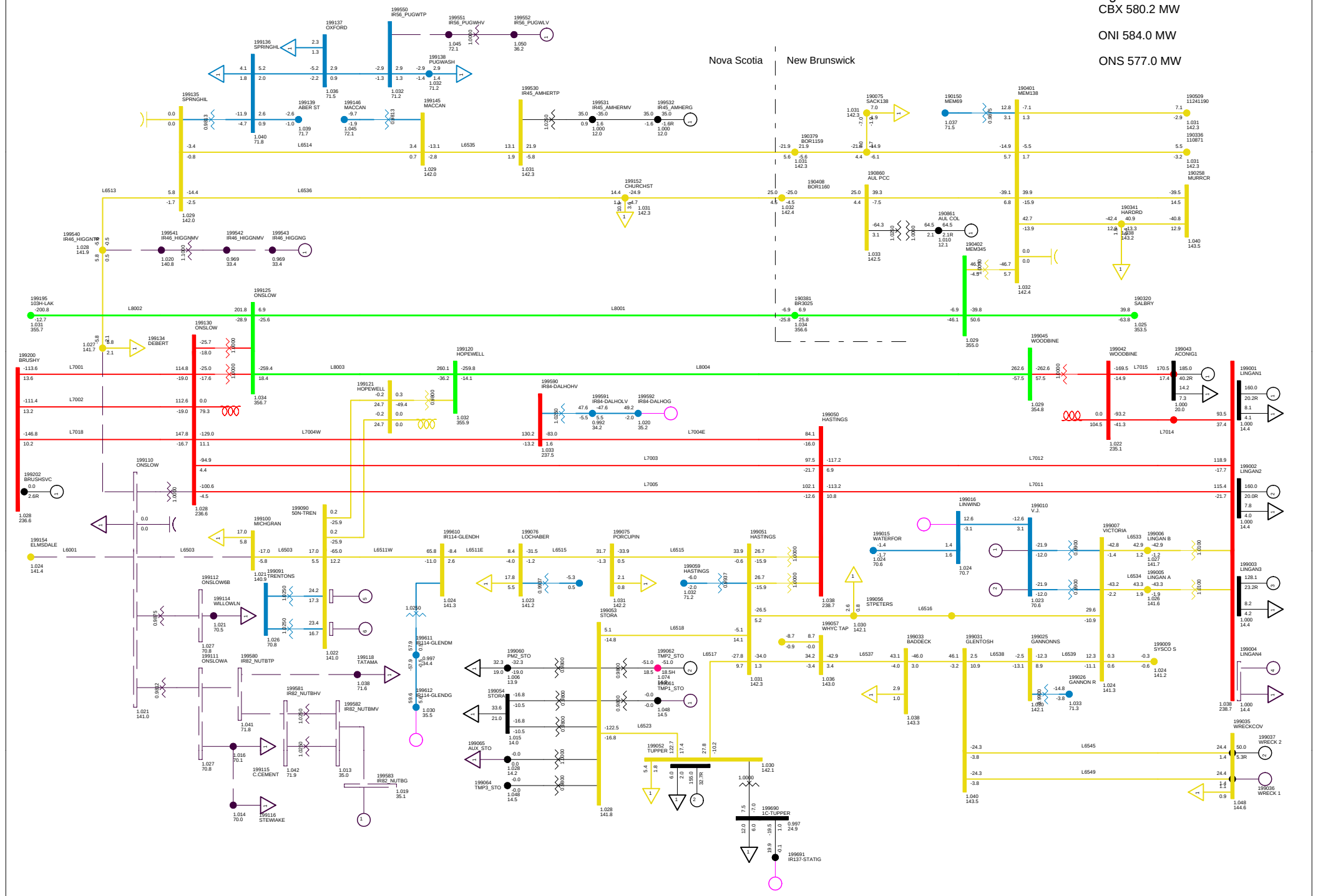

2013 LIGHT LOAD - NO TRENTON
C51 1P FAULT ON 1N BUS 61
NORTHEASTERN NS TUE, DEC 09 2008 22:26

Total Wind Gen: 95.6 MW
Gross Lingan 448.1 MW
Gross Pt Aconi 185.0 MW
Gross Tupper 155.0 MW
Gross Trenton 0.0 MW
Gross Tuft's Cove 0.0 MW
Gross Wreck Cove 50.0 MW
Gross Gas Turbine 0.0 MW
Gross Small Hydro 25.0 MW
Net Stora Load 117.4 MW
Total BMPC Load 42.5 MW

Bus - VOLTAGE (KV/PU)
Branch - MW/MVAR
Equipment - MW/MVAR
110.0%RATEA
1.0500V 0.950UV
KV: <=25.000 <=69.000 <=138.000 <=230.000 <=345.000 >345.000

Figure ___

NSX 49.7 MW
CBX 631.5 MW
ONI 633.0 MW
ONS 576.6 MW

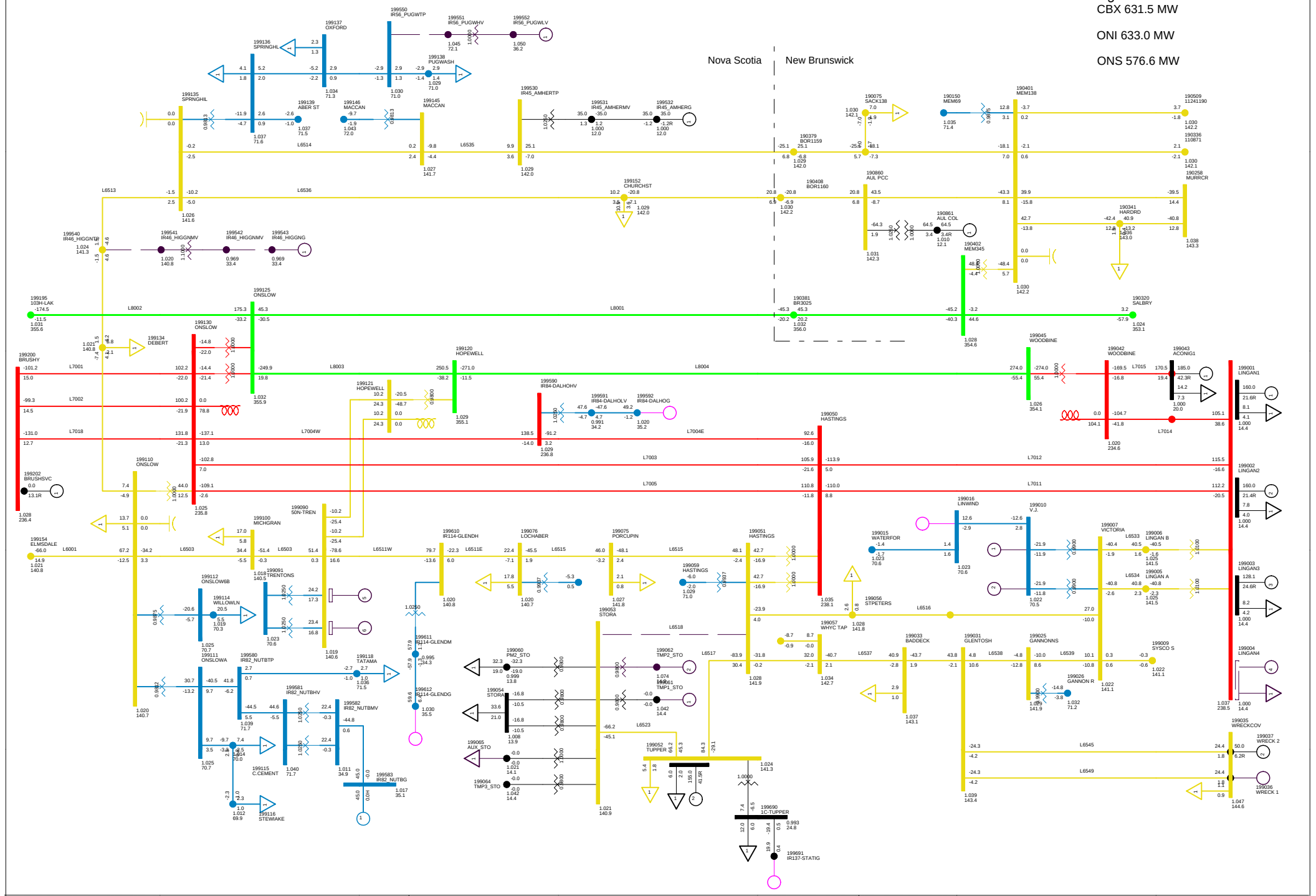

2013 LIGHT LOAD - NO TRENTON
C52 BBU 47C-601
NORTHEASTERN NS TUE, DEC 09 2008 22:27

Total Wind Gen: 140.6 MW | Gross Tupper 155.0 MW | Gross Wreck Cove 50.0 MW | Net Stora Load 66.2 MW
Gross Lingan 448.1 MW | Gross Trenton 0.0 MW | Gross Gas Turbine 0.0 MW | Total BMPC Load 42.5 MW
Gross Pt Aconi 185.0 MW | Gross Tuft's Cove 0.0 MW | Gross Small Hydro 25.0 MW

Bus - VOLTAGE (KV/PU)
Branch - MW/MVAR
Equipment - MW/MVAR
110.0%RATEA
1.050OV 0.950UV
KV: <=25.000 <=69.000 <=138.000 <=230.000 <=345.000 >345.000

Figure ___

NSX 0.7 MW

CBX 580.2 MW

ONI 583.9 MW

ONS 576.5 MW

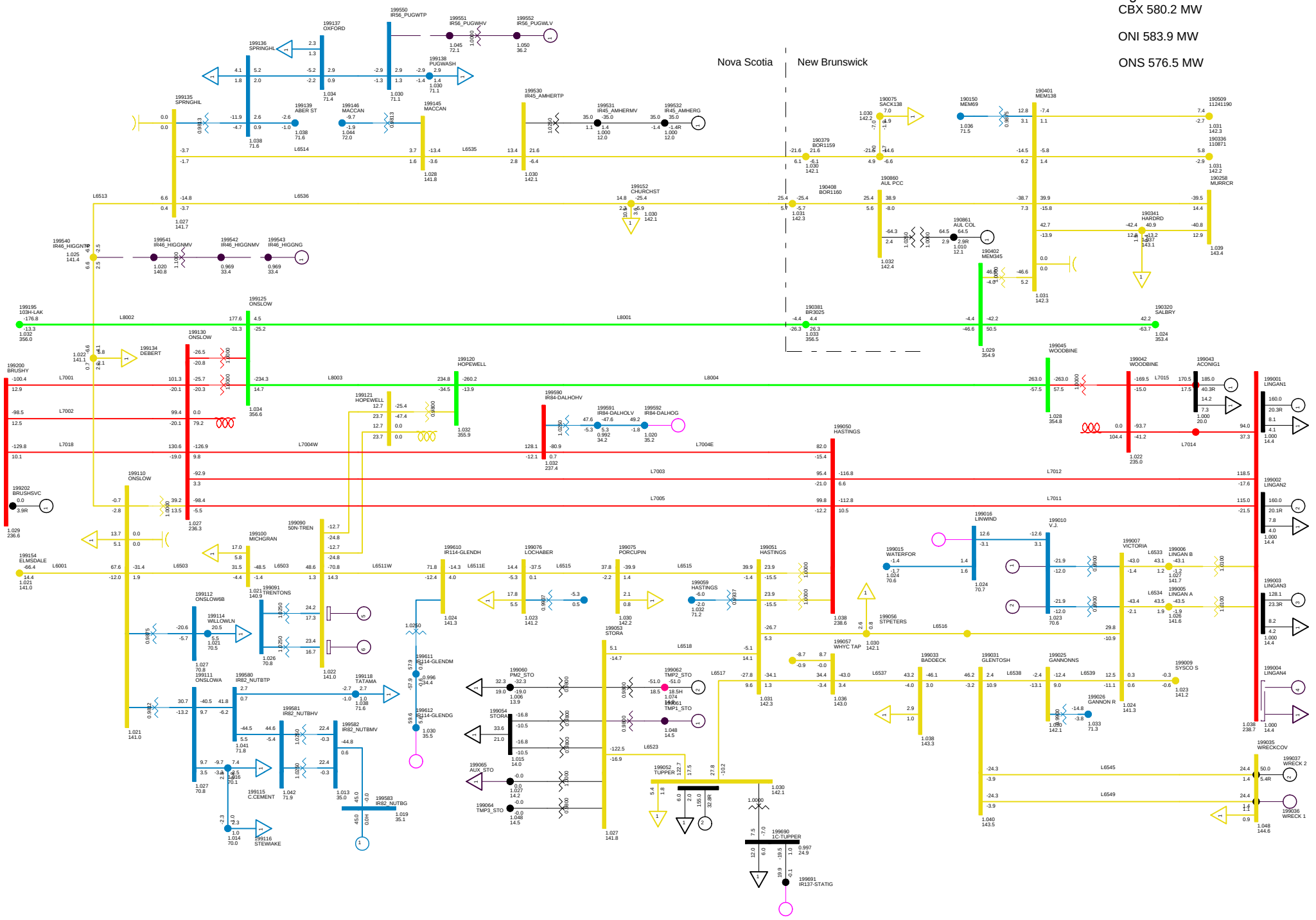

2013 LIGHT LOAD - NO TRENTON
C53 BREAKR 47C-602 FAULT
NORTHEASTERN NS TUE, DEC 09 2008 22:27

Total Wind Gen: 140.6 MW
Gross Lingan 448.1 MW
Gross Pt Aconi 185.0 MW
Gross Tupper 155.0 MW
Gross Trenton 0.0 MW
Gross Tuft's Cove 0.0 MW
Gross Wreck Cove 50.0 MW
Gross Gas Turbine 0.0 MW
Gross Small Hydro 25.0 MW
Net Stora Load 117.4 MW
Total BMPC Load 42.5 MW

Bus - VOLTAGE (KV/PU)
Branch - MW/MVAR
Equipment - MW/MVAR
110.0%RATEA
1.050OV 0.950UV
KV: <=25.000 <=69.000 <=138.000 <=230.000 <=345.000 >345.000

Figure ___

NSX 0.7 MW

CBX 580.2 MW

ONI 583.9 MW

ONS 576.5 MW

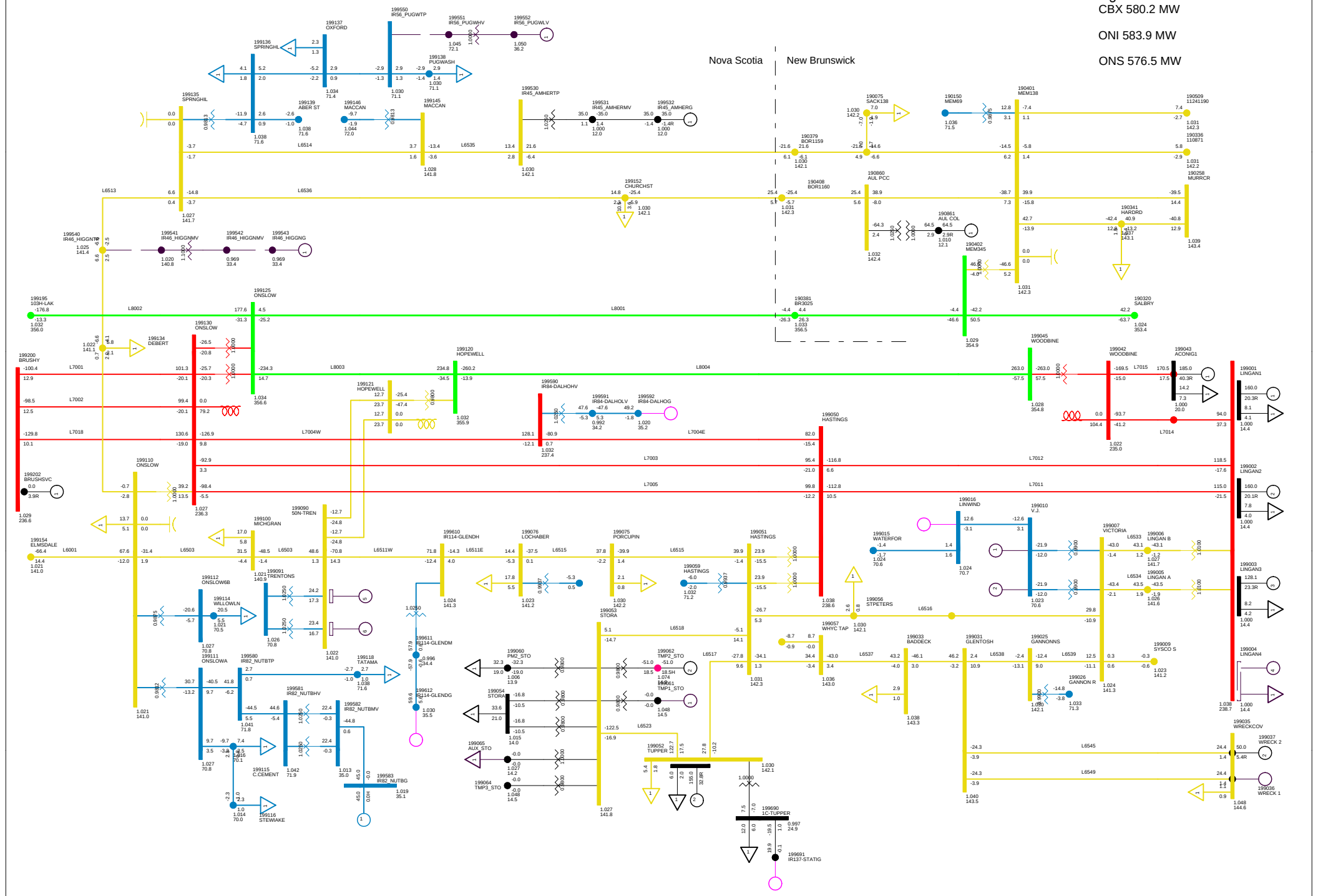

2010 LIGHT, NSLOAD=1150
NS-NB=0; NB-NE=0; CBX=580; ONI=583 ONS=576
NORTHEASTERN NS TUE, DEC 09 2008 22:27

Total Wind Gen: 140.6 MW | Gross Tupper 155.0 MW | Gross Wreck Cove 50.0 MW | Net Stora Load 117.4 MW
Gross Lingan 448.1 MW | Gross Trenton 0.0 MW | Gross Gas Turbine 0.0 MW | Total BMPC Load 42.5 MW
Gross Pt Aconi 185.0 MW | Gross Tuft's Cove 0.0 MW | Gross Small Hydro 25.0 MW

Bus - VOLTAGE (KV/PU)
Branch - MW/MVAR
Equipment - MW/MVAR
110.0%RATEA
1.0500V 0.950UV
KV: <=25.000 <=69.000 <=138.000 <=230.000 <=345.000 >345.000

Figure ___

NSX -14.2 MW

CBX 568.2 MW

ONI 569.4 MW

ONS 576.8 MW

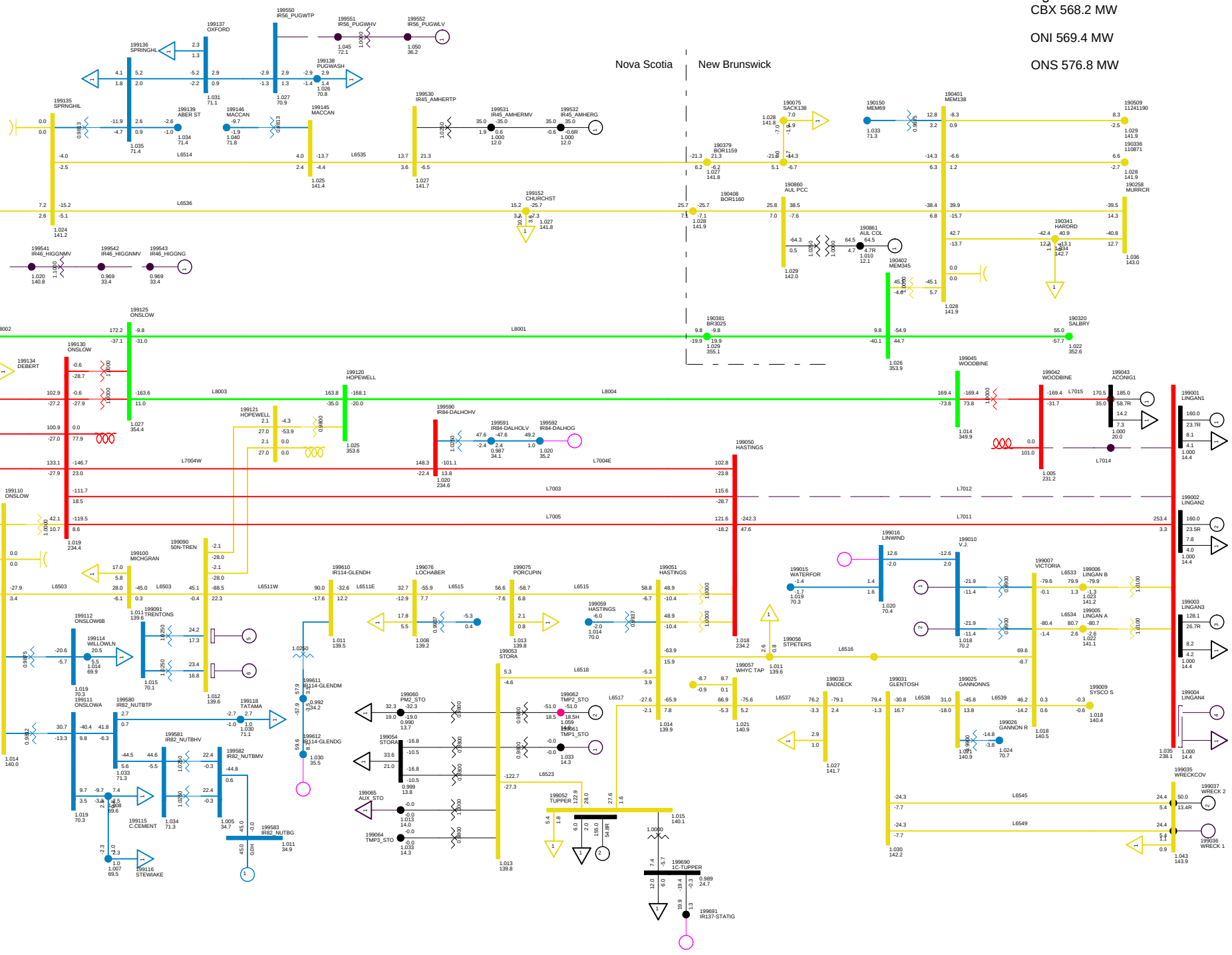

2013 LIGHT LOAD - NO TRENTON
C54 BBU 88S-723 NO SPS
NORTHEASTERN NS TUE, DEC 09 2008 22:27

Total Wind Gen: 140.6 MW	Gross Tupper 155.0 MW	Gross Wreck Cove 50.0 MW	Net Stora Load 117.4 MW
Gross Lingan 448.1 MW	Gross Trenton 0.0 MW	Gross Gas Turbine 0.0 MW	Total BMPC Load 42.5 MW
Gross Pt Aconi 185.0 MW	Gross Tuft's Cove 0.0 MW	Gross Small Hydro 25.0 MW	

Bus - VOLTAGE (KV/PU)
Branch - MW/MVAR
Equipment - MW/MVAR

110.0%RATEA
1.050OV 0.950UV
KV: <=25.000 <=69.000 <=138.000 <=230.000 <=345.000 >345.000

Figure ___

NSX -5.1 MW

CBX 580.7 MW

ONI 580.6 MW

ONS 578.9 MW

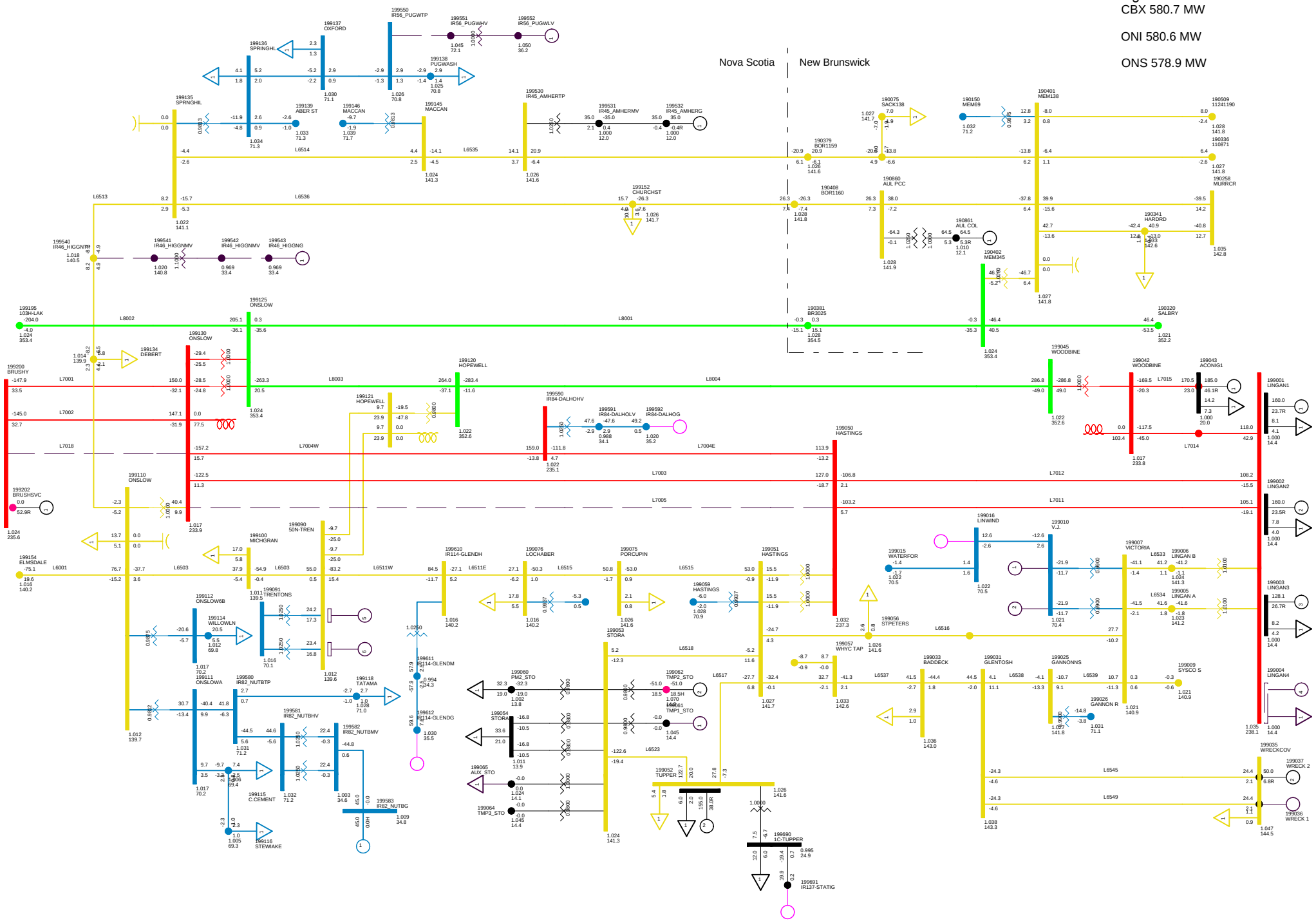

2013 LIGHT LOAD - NO TRENTON
C55 BBU 67N-712
NORTHEASTERN NS TUE, DEC 09 2008 22:27

Total Wind Gen: 140.6 MW
Gross Lingan 448.1 MW
Gross Pt Aconi 185.0 MW
Gross Tupper 155.0 MW
Gross Trenton 0.0 MW
Gross Tuft's Cove 0.0 MW
Gross Wreck Cove 50.0 MW
Gross Gas Turbine 0.0 MW
Gross Small Hydro 25.0 MW
Net Stora Load 117.4 MW
Total BMPC Load 42.5 MW

Bus - VOLTAGE (KV/PU)
Branch - MW/MVAR
Equipment - MW/MVAR
110.0%RATEA
1.050UV 0.950UV
KV: <=25.000 <=69.000 <=138.000 <=230.000 <=345.000 >345.000

Figure ___

NSX -12.8 MW

CBX 575.6 MW

ONI 571.9 MW

ONS 577.8 MW

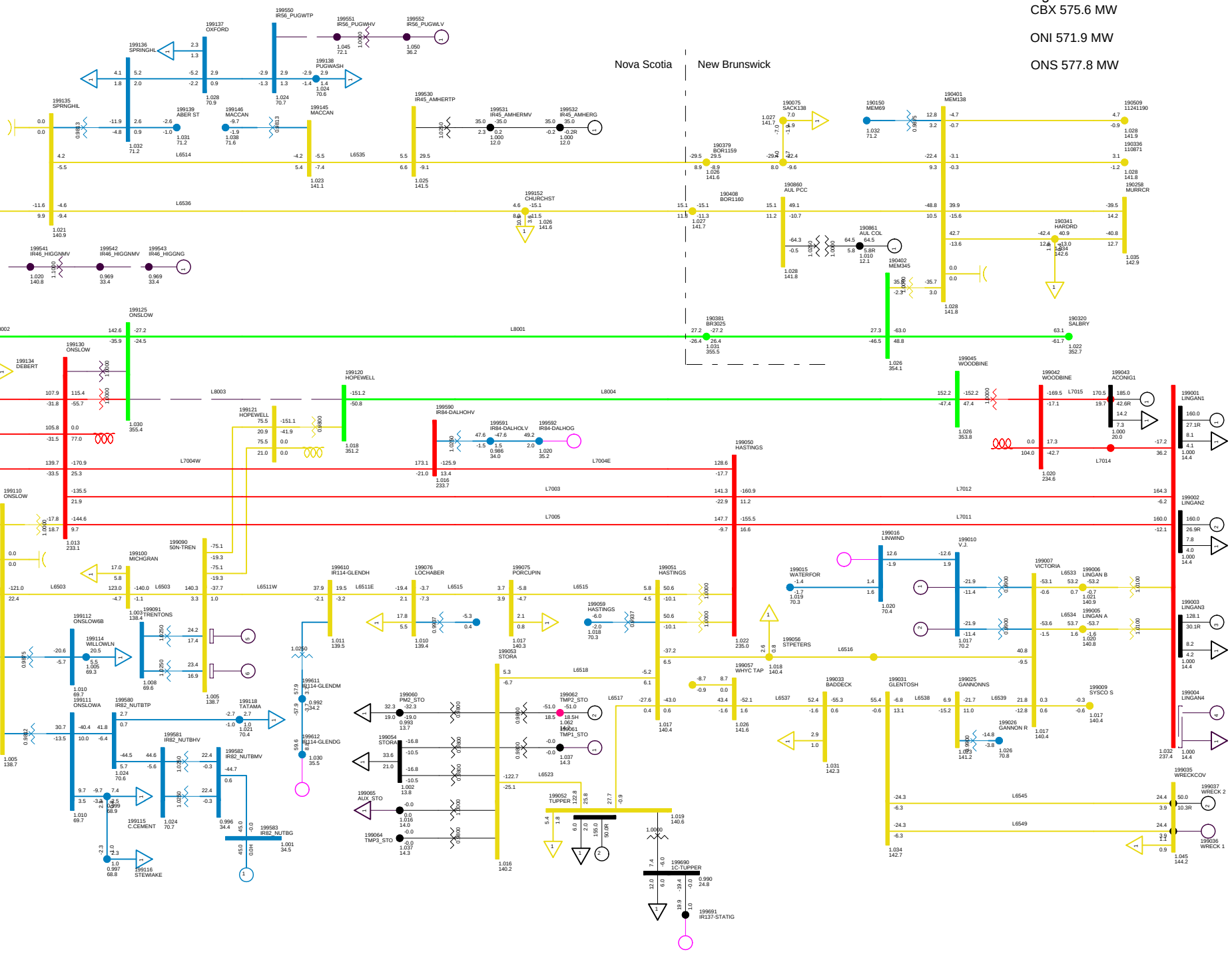

2013 LIGHT LOAD - NO TRENTON
C56 BBU 67N-811 L8003 + T82 NO SPS
NORTHEASTERN NS TUE, DEC 09 2008 22:27

Total Wind Gen: 140.6 MW | Gross Tupper 155.0 MW | Gross Wreck Cove 50.0 MW | Net Stora Load 117.4 MW
Gross Lingan 448.1 MW | Gross Trenton 0.0 MW | Gross Gas Turbine 0.0 MW | Total BMPC Load 42.5 MW
Gross Pt Aconi 185.0 MW | Gross Tuft's Cove 0.0 MW | Gross Small Hydro 25.0 MW

Bus - VOLTAGE (KV/PU)
Branch - MW/MVAR
Equipment - MW/MVAR
110.0%RATEA
1.050OV 0.950UV
KV: <=25.000 <=69.000 <=138.000 <=230.000 <=345.000 >345.000

Figure ___

NSX -18.3 MW

CBX 575.5 MW

ONI 571.8 MW

ONS 583.3 MW

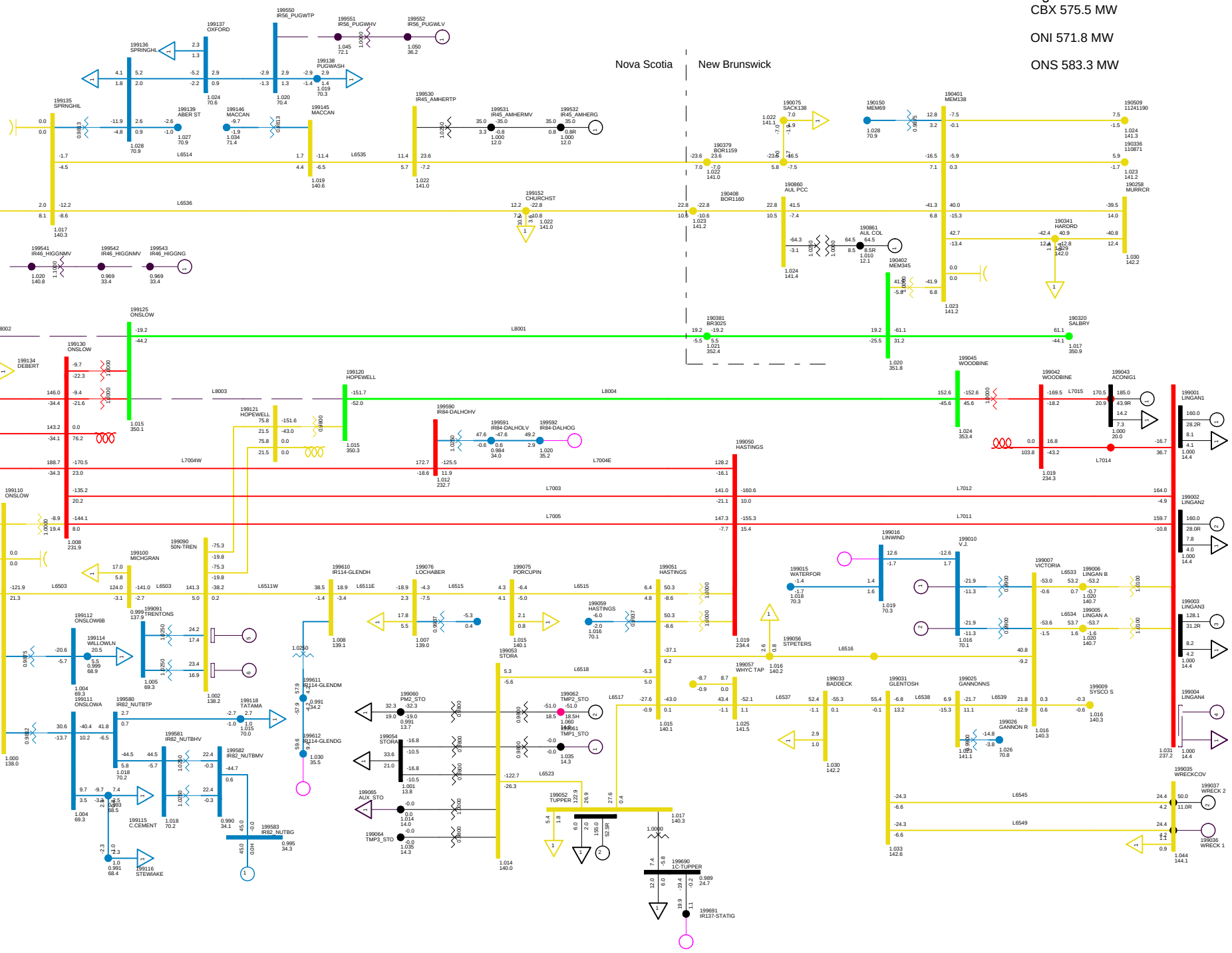

2013 LIGHT LOAD - NO TRENTON
C57 BBU 67N-812 L8003+L8002 NO SPS
NORTHEASTERN NS TUE, DEC 09 2008 22:28

Total Wind Gen: 140.6 MW
Gross Lingan 448.1 MW
Gross Pt Aconi 185.0 MW
Gross Tupper 155.0 MW
Gross Trenton 0.0 MW
Gross Tuft's Cove 0.0 MW
Gross Wreck Cove 50.0 MW
Gross Gas Turbine 0.0 MW
Gross Small Hydro 25.0 MW
Net Stora Load 117.4 MW
Total BMPC Load 42.5 MW

Bus - VOLTAGE (KV/PU)
Branch - MW/MVAR
Equipment - MW/MVAR
110.0%RATEA
1.050OV 0.950UV
KV: <=25.000 <=69.000 <=138.000 <=230.000 <=345.000 >345.000

Figure ___

NSX -30.5 MW

CBX 564.0 MW

ONI 554.6 MW

ONS 578.1 MW

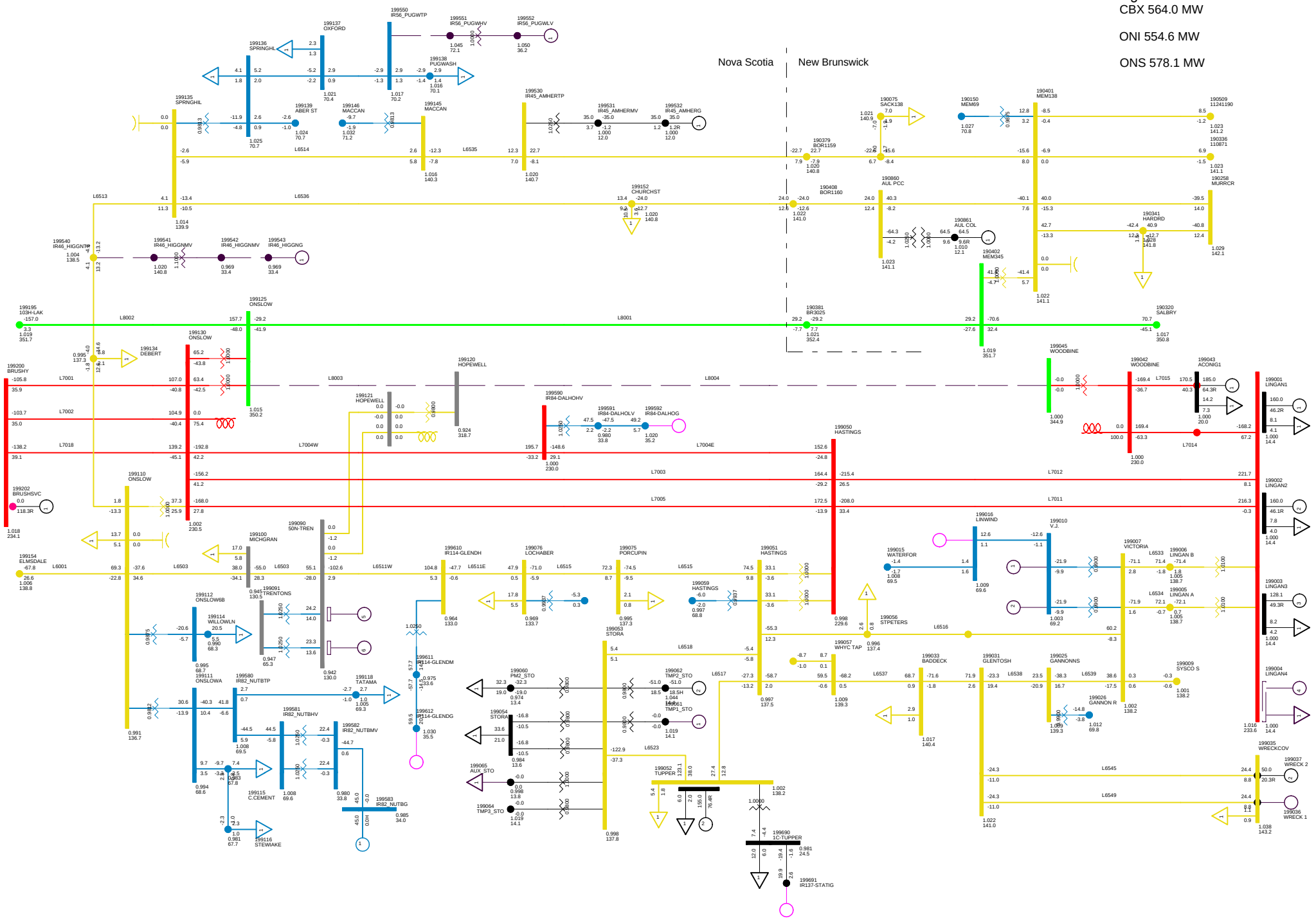

2013 LIGHT LOAD - NO TRENTON
C58 BBU 79N-810 NO SPS
NORTHEASTERN NS TUE, DEC 09 2008 22:28

Total Wind Gen: 140.6 MW	Gross Tupper 155.0 MW	Gross Wreck Cove 50.0 MW	Net Stora Load 117.4 MW
Gross Lingan 448.1 MW	Gross Trenton 0.0 MW	Gross Gas Turbine 0.0 MW	Total BMPC Load 42.5 MW
Gross Pt Aconi 185.0 MW	Gross Tuft's Cove 0.0 MW	Gross Small Hydro 25.0 MW	

Bus - VOLTAGE (KV/PU)
Branch - MW/MVAR
Equipment - MW/MVAR
110.0%RATEA
1.050OV 0.950UV
KV: <=25.000 <=69.000 <=138.000 <=230.000 <=345.000 >345.000

Figure ___

NSX -110.8 MW

CBX 465.1 MW

ONI 472.6 MW

ONS 576.4 MW

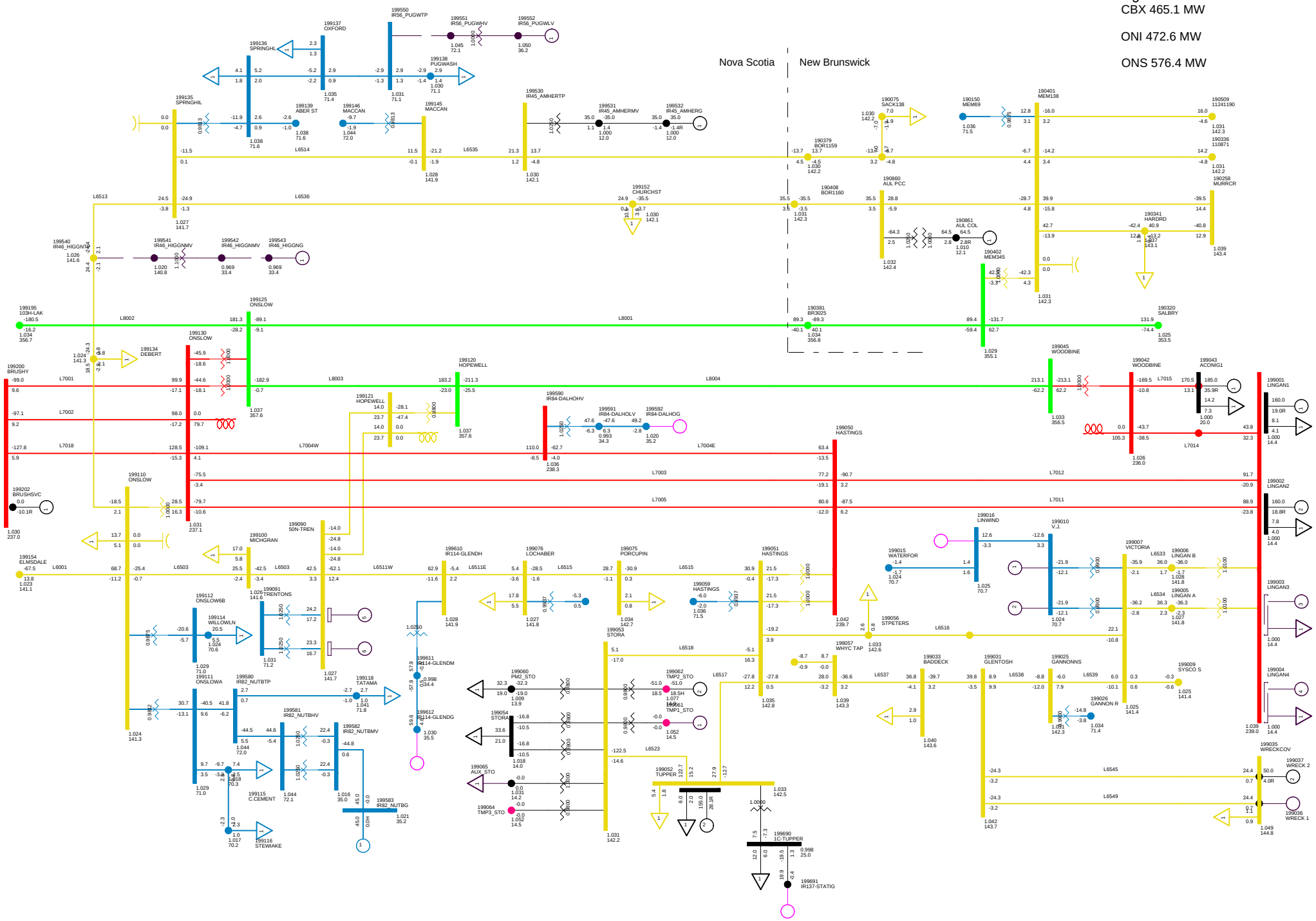

2013 LIGHT LOAD - NO TRENTON
C59 BBU 88S-721 TRIP LINGAN 3 AND 4
NORTHEASTERN NS TUE, DEC 09 2008 22:29

Total Wind Gen: 140.6 MW | Gross Tupper 155.0 MW | Gross Wreck Cove 50.0 MW | Net Stora Load 117.4 MW
Gross Lingan 320.0 MW | Gross Trenton 0.0 MW | Gross Gas Turbine 0.0 MW | Total BMPC Load 42.5 MW
Gross Pt Aconi 185.0 MW | Gross Tuft's Cove 0.0 MW | Gross Small Hydro 25.0 MW

Bus - VOLTAGE (KV/PU)
Branch - MW/MVAR
Equipment - MW/MVAR
110.0%RATEA
1.0500V 0.950UV
KV: <=25.000 <=69.000 <=138.000 <=230.000 <=345.000 >345.000

Figure ___

NSX -1.8 MW

CBX 581.3 MW

ONI 581.8 MW

ONS 576.8 MW

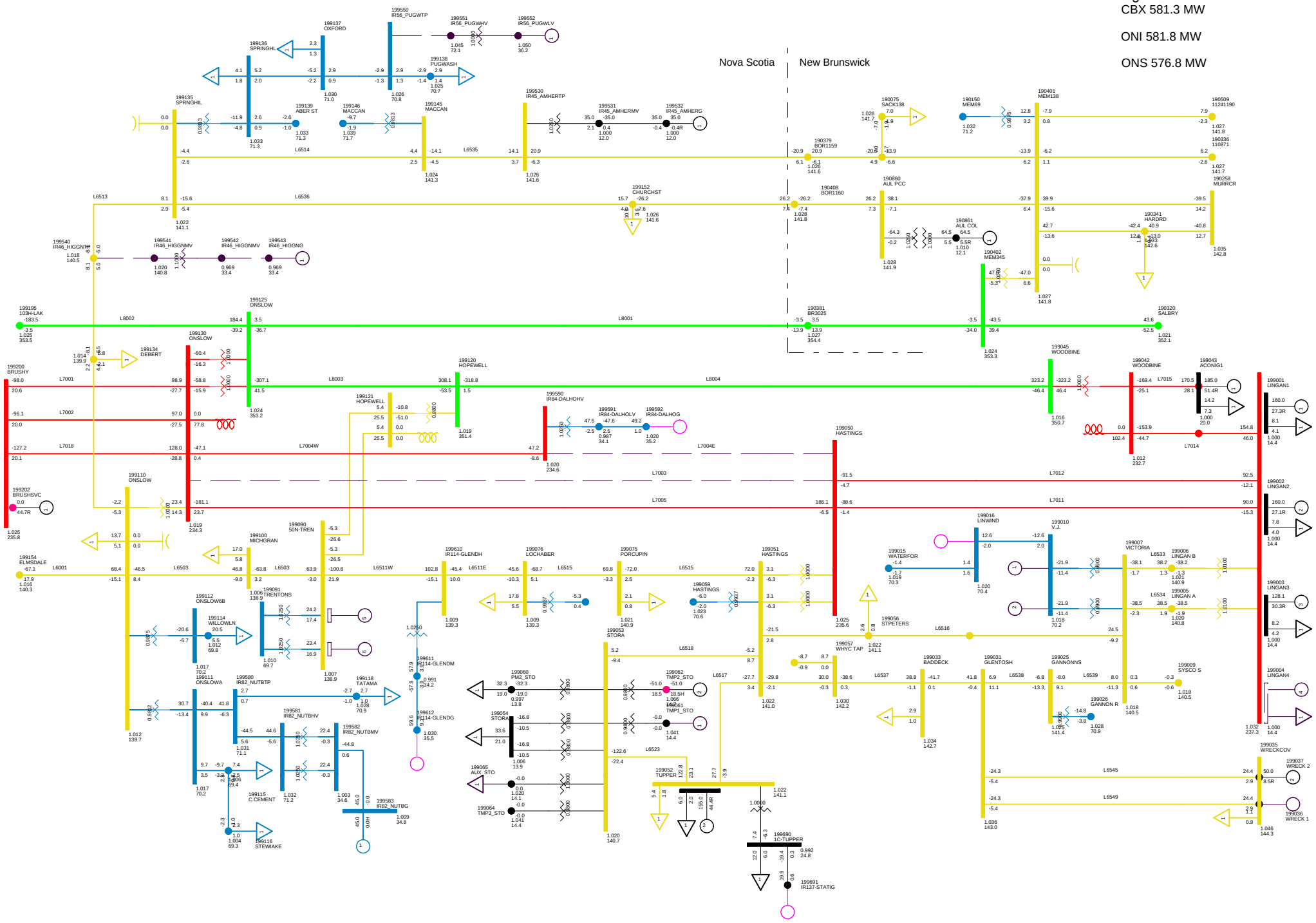

2013 LIGHT LOAD - NO TRENTON
C60 DCT ON L7003+L7004
NORTHEASTERN NS TUE, DEC 09 2008 22:29

Total Wind Gen: 140.6 MW | Gross Tupper 155.0 MW | Gross Wreck Cove 50.0 MW | Net Stora Load 117.4 MW
Gross Lingan 448.1 MW | Gross Trenton 0.0 MW | Gross Gas Turbine 0.0 MW | Total BMPC Load 42.5 MW
Gross Pt Aconi 185.0 MW | Gross Tuft's Cove 0.0 MW | Gross Small Hydro 25.0 MW

Bus - VOLTAGE (KV/PU)
Branch - MW/MVAR
Equipment - MW/MVAR
110.0%RATEA
1.050UV 0.950UV
KV: <=25.000 <=69.000 <=138.000 <=230.000 <=345.000 >345.000

Figure ___

NSX 46.7 MW

CBX 563.2 MW

ONI 538.8 MW

ONS 578.4 MW

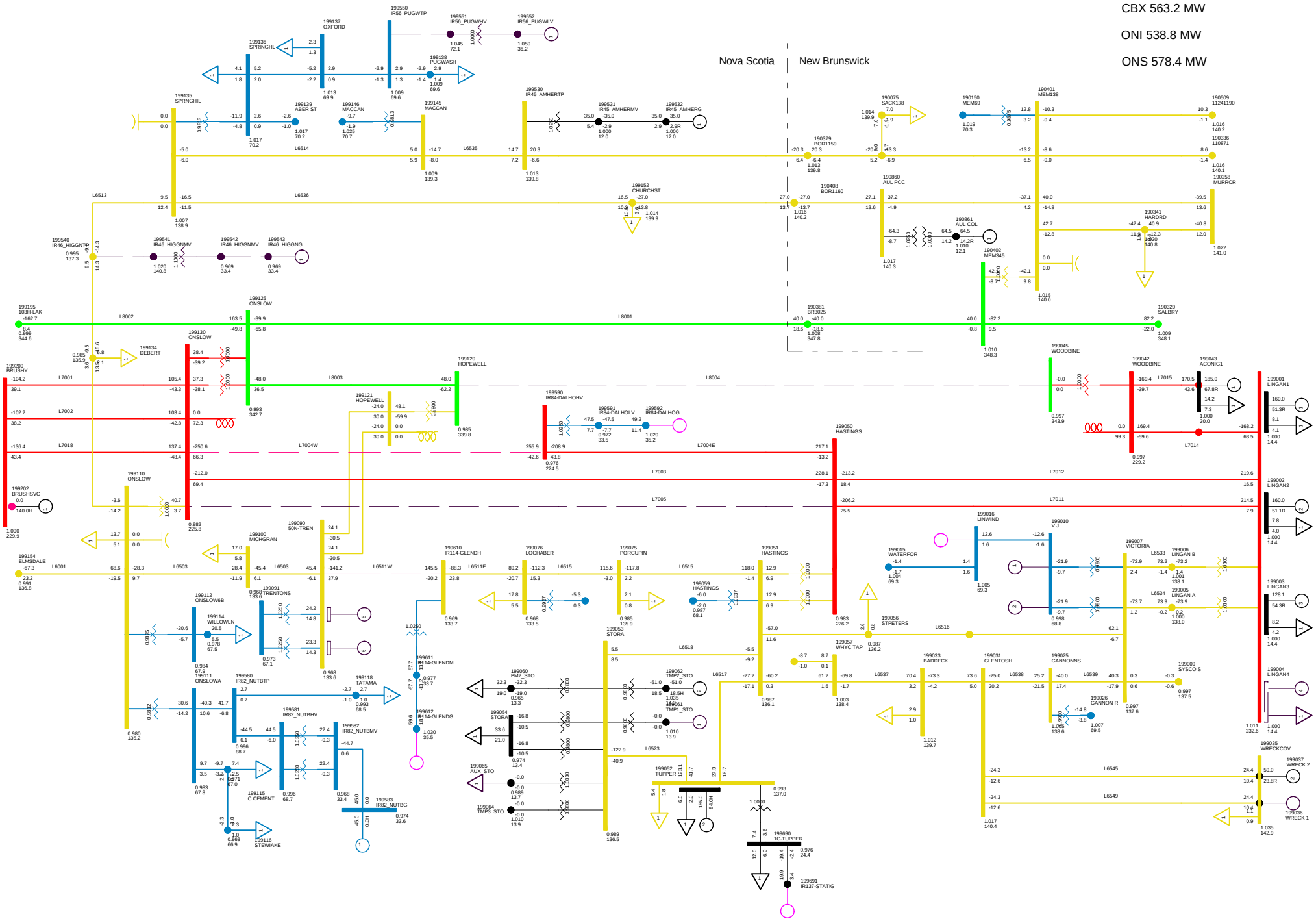

2013 LIGHT LOAD - NO TRENTON
C61 DCT ON STRAIT CROSSING LOSE L8004-L7005 NO SPS
NORTHEASTERN NS TUE, DEC 09 2008 22:29

Total Wind Gen: 140.6 MW	Gross Tupper 155.0 MW	Gross Wreck Cove 50.0 MW	Net Stora Load 117.4 MW
Gross Lingan 448.1 MW	Gross Trenton 0.0 MW	Gross Gas Turbine 0.0 MW	Total BMPC Load 42.5 MW
Gross Pt Aconi 185.0 MW	Gross Tuft's Cove 0.0 MW	Gross Small Hydro 25.0 MW	

Bus - VOLTAGE (KV/PU)
Branch - MW/MVAR
Equipment - MW/MVAR
110.0%RATEA
1.050OV 0.950UV
KV: <=25.000 <=69.000 <=138.000 <=230.000 <=345.000 >345.000

Figure ___

NSX -110.8 MW

CBX 465.1 MW

ONI 472.6 MW

ONS 576.4 MW

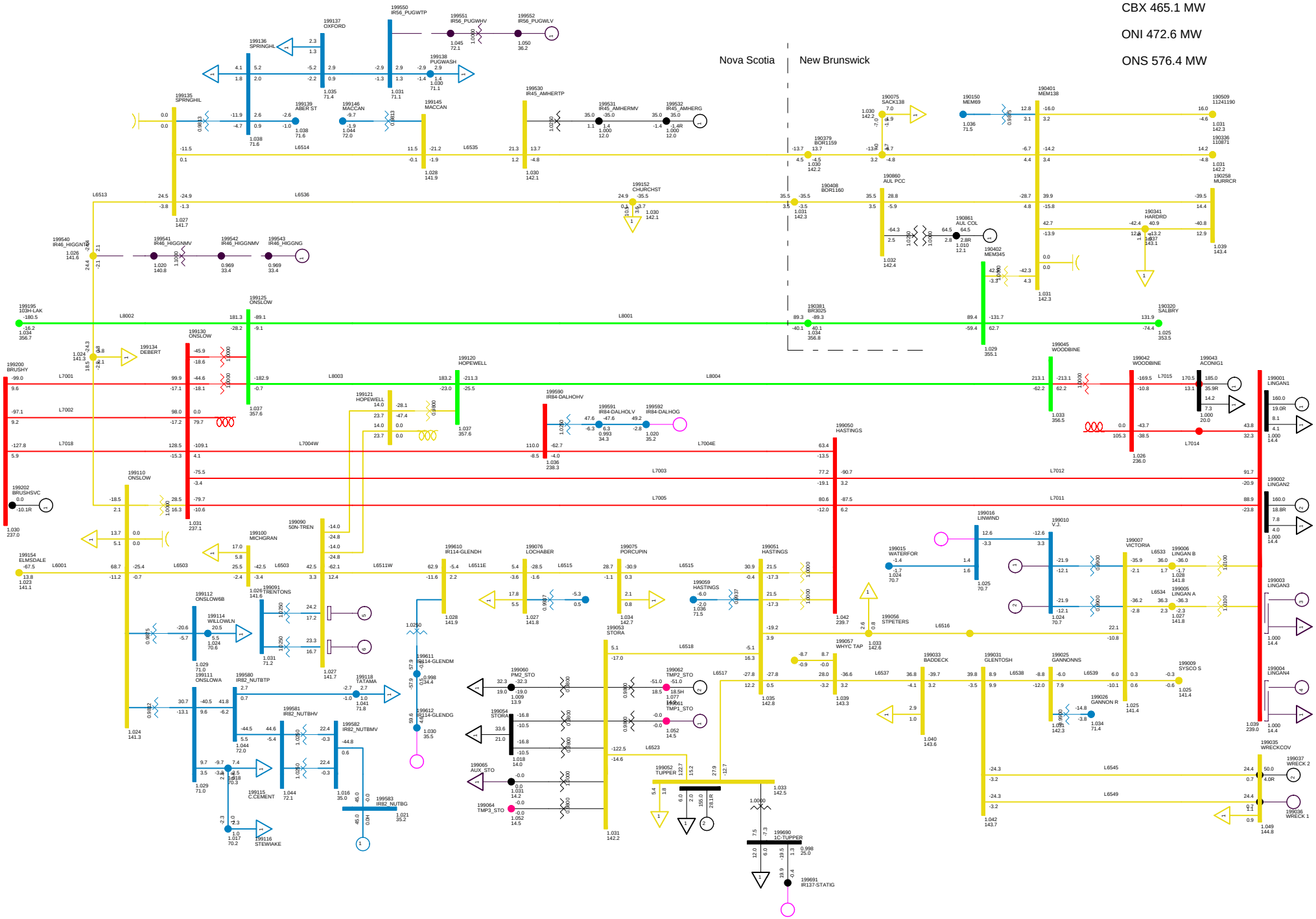

2013 LIGHT LOAD - NO TRENTON
C62 FAULT ON BREAKER 88S-721 TRIPS LINGAN 3 AND 4
NORTHEASTERN NS TUE, DEC 09 2008 22:29

Total Wind Gen: 140.6 MW
Gross Lingan 320.0 MW
Gross Pt Aconi 185.0 MW
Gross Tupper 155.0 MW
Gross Trenton 0.0 MW
Gross Tuft's Cove 0.0 MW
Gross Wreck Cove 50.0 MW
Gross Gas Turbine 0.0 MW
Gross Small Hydro 25.0 MW
Net Stora Load 117.4 MW
Total BMPC Load 42.5 MW

Bus - VOLTAGE (KV/PU)
Branch - MW/MVAR
Equipment - MW/MVAR
110.0%RATEA
1.050OV 0.950UV
KV: <=25.000 <=69.000 <=138.000 <=230.000 <=345.000 >345.000

Figure ___

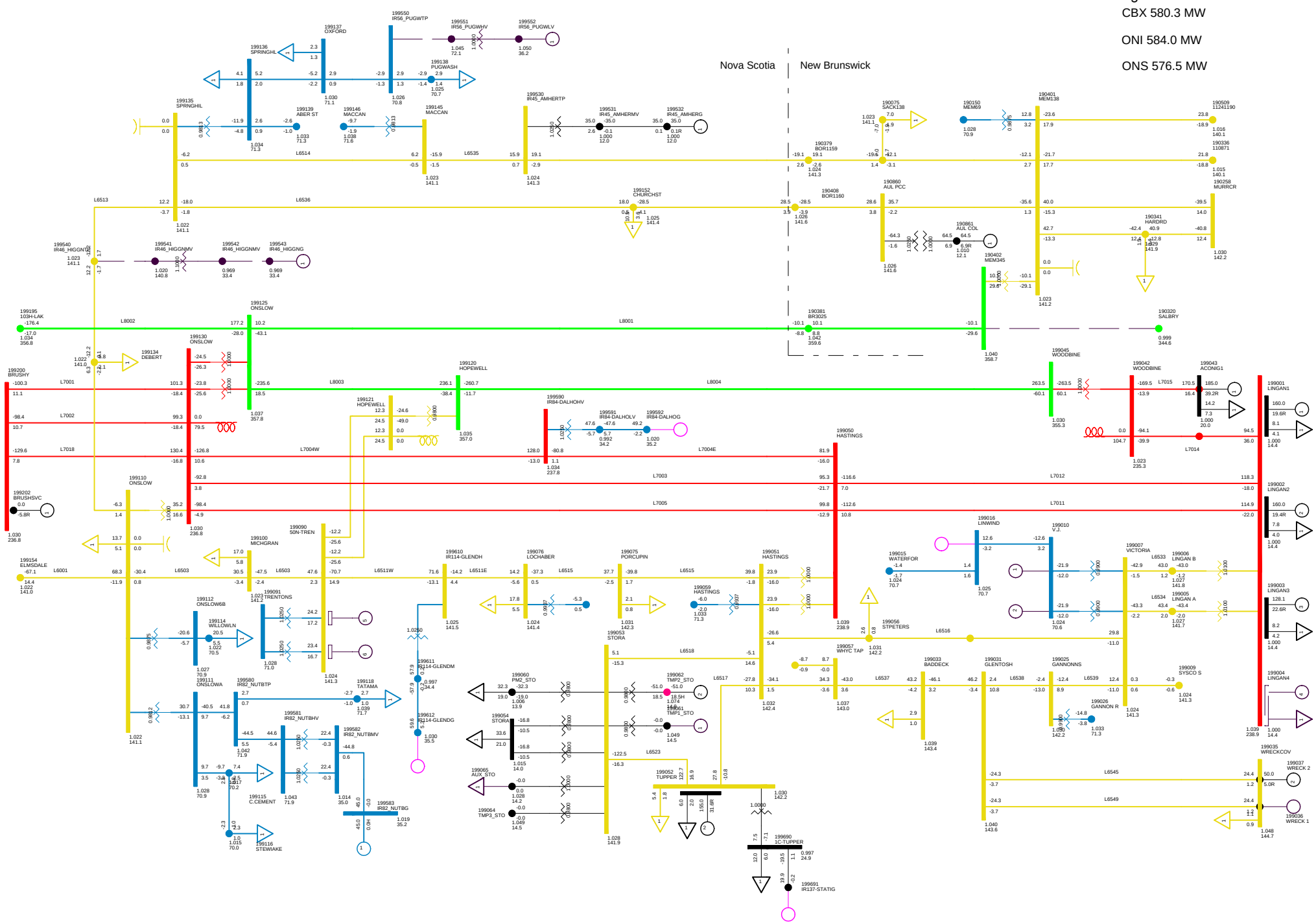

2013 LIGHT LOAD - NO TRENTON
C63 FAULT ON SALISBURY SA3-2 TRIPS L3006 AND L3017
NORTHEASTERN NS TUE, DEC 09 2008 22:29

Total Wind Gen: 140.6 MW	Gross Tupper 155.0 MW	Gross Wreck Cove 50.0 MW	Net Stora Load 117.4 MW
Gross Lingan 448.1 MW	Gross Trenton 0.0 MW	Gross Gas Turbine 0.0 MW	Total BMPC Load 42.5 MW
Gross Pt Aconi 185.0 MW	Gross Tuft's Cove 0.0 MW	Gross Small Hydro 25.0 MW	

Bus - VOLTAGE (KV/PU)
Branch - MW/MVAR
Equipment - MW/MVAR
110.0%RATEA
1.050OV 0.950UV
KV: <=25.000 <=69.000 <=138.000 <=230.000 <=345.000 >345.000

Figure ___

NSX 0.7 MW

CBX 580.2 MW

ONI 583.9 MW

ONS 576.5 MW

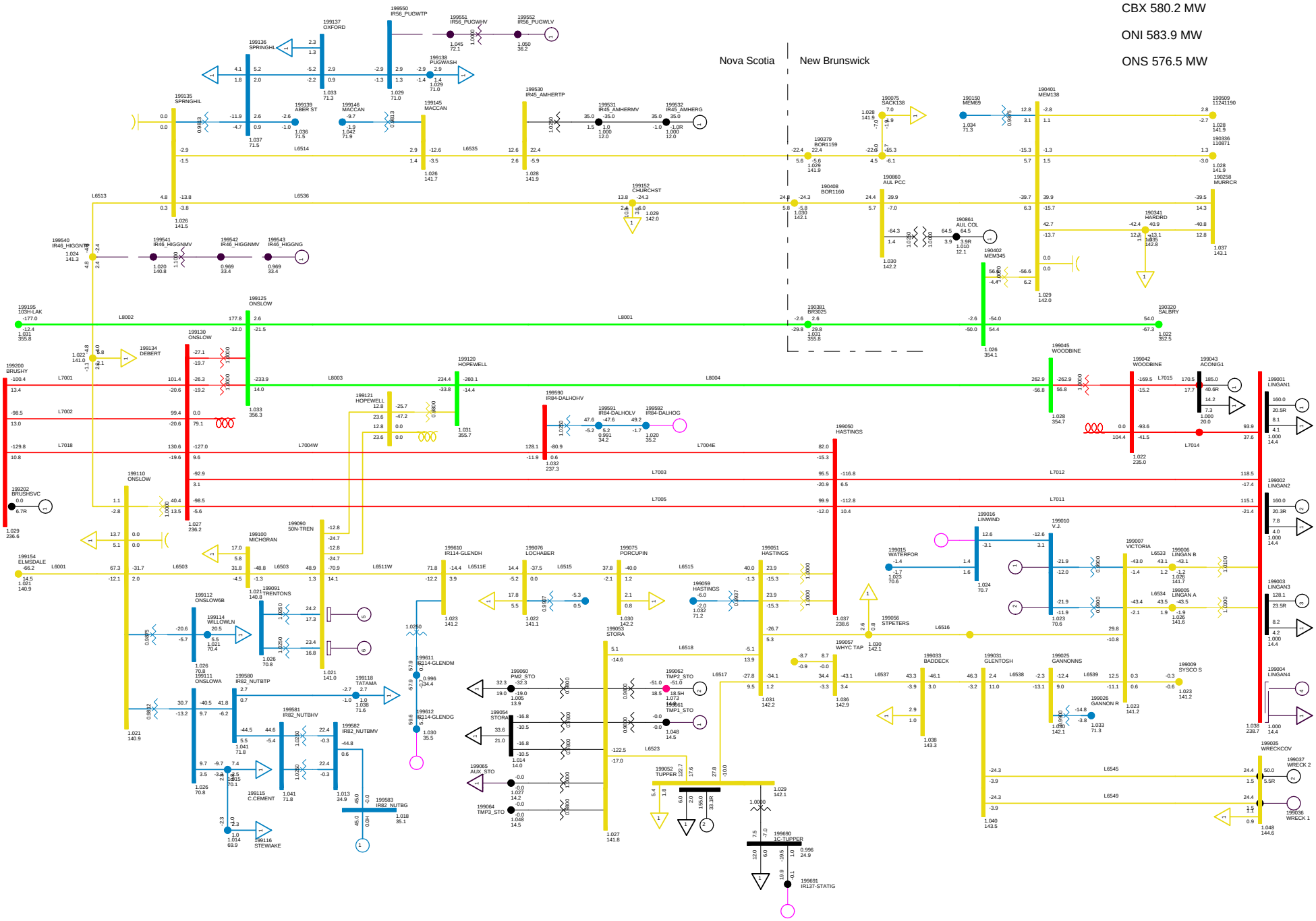

2013 LIGHT LOAD - NO TRENTON
C64 FAULT ON BREAKER SALISBURY BREAKER SA3-4 TRIPS L3013 AND
NORTHEASTERN NS TUE, DEC 09 2008 22:29

Total Wind Gen: 140.6 MW	Gross Tupper 155.0 MW	Gross Wreck Cove 50.0 MW	Net Stora Load 117.4 MW
Gross Lingan 448.1 MW	Gross Trenton 0.0 MW	Gross Gas Turbine 0.0 MW	Total BMPC Load 42.5 MW
Gross Pt Aconi 185.0 MW	Gross Tuft's Cove 0.0 MW	Gross Small Hydro 25.0 MW	

Bus - VOLTAGE (KV/PU)
Branch - MW/MVAR
Equipment - MW/MVAR
110.0%RATEA
1.050OV 0.950UV
KV: <=25.000 <=69.000 <=138.000 <=230.000 <=345.000 >345.000

Figure ____

```
MENU,OFF      /* FORCE MENU TO CORRECT STATUS
PSAS
1

RECOVER FROM win13-iatr.snp AND 2013XP-cnv.sav
PSS
TEXT
TEXT CONTINGENCY A06.1
TEXT 3 PHASE FAULT ON L8004 AT WOODBINE
TEXT CLEARED IN 4.5 CYCLES
TEXT NO SPS
TEXT
PDEV
2
a06.1-3p_8004_101s-2013XP.pdv
FIN
START, OUTPUT = a06.1-3p_8004_101s-2013XP.out
RUN TO 0 SECONDS, PRINT=0
APPLY FAULT AT WOODBINE BUS 199045
RUN FOR 4.5 CYCLES PRINT 0
CLEAR BUS FAULT 199045
DISCONNECT BRANCH FROM BUS 199120 to bus 199045
RUN FOR 10.5 CYCLES PRINT 0 PLOT 7
run to 5 seconds print 0 plot 11
run to 10 seconds, print=0, plot=15
end
stop
```

```
MENU,OFF      /* FORCE MENU TO CORRECT STATUS
PSAS
1

RECOVER FROM win13-iatr.snp AND 2013XP-cnv.sav
PSS
TEXT
TEXT CONTINGENCY A06.1S
TEXT 3 PHASE FAULT ON L8004 AT WOODBINE
TEXT CLEARED IN 4.5 CYCLES
TEXT SPS DROPS LINGAN UNIT 4
TEXT
PDEV
2
a06.1s-3p_8004_101s-2013XP.pdv
FIN
START, OUTPUT = a06.1s-3p_8004_101s-2013XP.out
RUN TO 0 SECONDS, PRINT=0
APPLY FAULT AT WOODBINE BUS 199045
RUN FOR 4.5 CYCLES PRINT 0
CLEAR BUS FAULT 199045
DISCONNECT BRANCH FROM BUS 199120 to bus 199045
RUN FOR 10.5 CYCLES PRINT 0 PLOT 7
disconnect BUS 199004
RUN TO 5 SECONDS PRINT 0 PLOT 7
run to 10 seconds print 0 plot 15
end
stop
ECHO
@END
```

```
MENU,OFF      /* FORCE MENU TO CORRECT STATUS
PSAS
1

RECOVER FROM win13-iatr.snp AND 2013XP-cnv.sav
PSS
TEXT
TEXT CONTINGENCY A06.2
TEXT 3 PHASE FAULT ON L8004 AT HOPEWELL
TEXT CLEARED IN 4.5 CYCLES
TEXT NO SPS
TEXT
PDEV
2
a06.2-3p_8004_79n-2013XP.pdv
FIN
START, OUTPUT = a06.2-3p_8004_79n-2013XP.out
RUN TO 0 SECONDS, PRINT=0
APPLY FAULT AT HOPEWELL BUS 199120
RUN FOR 4.5 CYCLES PRINT 0 PLOT 7
CLEAR BUS FAULT 199120
TRIP BRANCH FROM BUS 199120 to bus 199045
RUN FOR 10.5 CYCLES PRINT 0 PLOT 9
RUN TO 5 SECONDS PRINT 0 PLOT 15
run to 10 seconds, print=0, plot=15
end
stop
ECHO
@END
```

```
MENU,OFF      /* FORCE MENU TO CORRECT STATUS
PSAS
1

RECOVER FROM win13-iatr.snp AND 2013XP-cnv.sav
PSS
TEXT
TEXT CONTINGENCY A06.2S
TEXT 3 PHASE FAULT ON L8004 AT HOPEWELL
TEXT CLEARED IN 4.5 CYCLES
TEXT SPS TRIPS LINGAN UNIT 2
TEXT
PDEV
2
a06.2s-3p_8004_79n-2013XP.pdv
FIN
START, OUTPUT = a06.2s-3p_8004_79n-2013XP.out
RUN TO 0 SECONDS, PRINT=0
APPLY FAULT AT HOPEWELL BUS 199120
RUN FOR 4.5 CYCLES PRINT 0 PLOT 7
CLEAR BUS FAULT 199120
TRIP BRANCH FROM BUS 199120 to bus 199045
RUN FOR 10.5 CYCLES PRINT 0 PLOT 7
disconnect BUS 199002
RUN TO 5 SECONDS PRINT 0 PLOT 15
run to 10 seconds, print=0, plot=15
end
stop
ECHO
@END
```

```
MENU,OFF      /* FORCE MENU TO CORRECT STATUS
PSAS
1

RECOVER FROM win13-iatr.snp AND 2013XP-cnv.sav
PSS
TEXT
TEXT CONTINGENCY A07.1
TEXT 3 PHASE FAULT ON L8003 AT HOPEWELL
TEXT CLEARED IN 4.5 CYCLES
TEXT NO SPS
TEXT
PDEV
2
a07.1-3p_8003_79n-2013XP.pdv
FIN
START, OUTPUT = a07.1-3p_8003_79n-2013XP.out
RUN TO 0 SECONDS, PRINT=0
APPLY FAULT AT ONSLOW BUS 199120
RUN FOR 4.5 CYCLES PRINT 0 PLOT 7
CLEAR BUS FAULT 199120
DISCONNECT LINE FROM BUS 199125 TO BUS 199120
RUN FOR 10.5 CYCLES print 0
RUN TO 5 SECONDS PRINT 0 PLOT 15
run to 10 seconds, print=0, plot=15
end
stop
ECHO
@END
```

```
MENU,OFF      /* FORCE MENU TO CORRECT STATUS
PSAS
1

RECOVER FROM win13-iatr.snp AND 2013XP-cnv.sav
PSS
TEXT
TEXT CONTINGENCY A07.1s
TEXT 3 PHASE FAULT ON L8003 AT HOPEWELL
TEXT CLEARED IN 4.5 CYCLES
TEXT sps trips Lingan 2
TEXT
PDEV
2
a07.1s-3p_8003_79n-2013XP.pdv
FIN
START, OUTPUT = a07.1s-3p_8003_79n-2013XP.out
RUN TO 0 SECONDS, PRINT=0
APPLY FAULT AT ONSLOW BUS 199120
RUN FOR 4.5 CYCLES PRINT 0 PLOT 7
CLEAR BUS FAULT 199120
DISCONNECT LINE FROM BUS 199125 TO BUS 199120
RUN FOR 10.5 CYCLES PRINT 0
DISCONNECT BUS 199002
RUN TO 5 SECONDS PRINT 0 PLOT 15
run to 10 seconds, print=0, plot=15
end
stop
ECHO
@END
```

```
MENU,OFF      /* FORCE MENU TO CORRECT STATUS
PSAS
1

RECOVER FROM win13-iatr.snp AND 2013XP-cnv.sav
PSS
TEXT
TEXT CONTINGENCY A07.1s
TEXT 3 PHASE FAULT ON L8003 AT HOPEWELL
TEXT CLEARED IN 4.5 CYCLES
TEXT sps trips Lingan 2
TEXT
PDEV
2
a07.1ss-3p_8003_79n-2013XP.pdv
FIN
START, OUTPUT = a07.1ss-3p_8003_79n-2013XP.out
RUN TO 0 SECONDS, PRINT=0
APPLY FAULT AT ONSLOW BUS 199120
RUN FOR 4.5 CYCLES PRINT 0 PLOT 7
CLEAR BUS FAULT 199120
DISCONNECT LINE FROM BUS 199125 TO BUS 199120
RUN FOR 10.5 CYCLES PRINT 0
DISCONNECT BUS 199002
disconnect bus 199003
RUN TO 5 SECONDS PRINT 0 PLOT 15
run to 10 seconds, print=0, plot=15
end
stop
ECHO
@END
```

```
MENU,OFF      /* FORCE MENU TO CORRECT STATUS
PSAS
1

RECOVER FROM win13-iatr.snp AND 2013XP-cnv.sav
START, OUTPUT = a07.2-3p_8003_67n-2013XP.out
PSS
TEXT
TEXT CONTINGENCY A07.2
TEXT 3 PHASE FAULT ON L8003 AT ONSLOW
TEXT CLEARED IN 4.5 CYCLES
TEXT NO SPS
TEXT
PDEV
2
a07.2-3p_8003_67n-2013XP.pdv
FIN
RUN TO 0 SECONDS, PRINT=0
APPLY FAULT AT ONSLOW BUS 199125
RUN FOR 4.5 CYCLES PRINT 0 PLOT 7
CLEAR BUS FAULT 199125
DISCONNECT LINE FROM BUS 199125 TO BUS 199120
RUN FOR 10.5 CYCLES PRINT 0
RUN TO 5 SECONDS PRINT 0 PLOT 15
run to 10 seconds, print=0, plot=15
end
stop
ECHO
@END
```

```
MENU,OFF      /* FORCE MENU TO CORRECT STATUS
PSAS
1

RECOVER FROM win13-iatr.snp AND 2013XP-cnv.sav
PSS
TEXT
TEXT CONTINGENCY A07.2s
TEXT 3 PHASE FAULT ON L8003 AT ONSLOW
TEXT CLEARED IN 4.5 CYCLES
TEXT sps drops lingan 2
TEXT
PDEV
2
a07.2s-3p_8003_67n-2013XP.pdv
FIN
START, OUTPUT = a07.2s-3p_8003_67n-2013XP.out
RUN TO 0 SECONDS, PRINT=0
APPLY FAULT AT ONSLOW BUS 199125
RUN FOR 4.5 CYCLES PRINT 0 PLOT 7
CLEAR BUS FAULT 199125
DISCONNECT LINE FROM BUS 199125 TO BUS 199120
RUN FOR 10.5 CYCLES PRINT 0
DISCONNECT BUS 199002
RUN TO 5 SECONDS PRINT 0 PLOT 15
run to 10 seconds, print=0, plot=15
end
stop
ECHO
@END
```

```
MENU,OFF      /* FORCE MENU TO CORRECT STATUS
PSAS
1

RECOVER FROM win13-iatr.snp AND 2013XP-cnv.sav
PSS
TEXT
TEXT CONTINGENCY A07.2ss
TEXT 3 PHASE FAULT ON L8003 AT ONSLOW
TEXT CLEARED IN 4.5 CYCLES
TEXT sps drops lingan 2 and 3
TEXT
PDEV
2
a07.2ss-3p_8003_67n-2013XP.pdv
FIN
START, OUTPUT = a07.2ss-3p_8003_67n-2013XP.out
RUN TO 0 SECONDS, PRINT=0
APPLY FAULT AT ONSLOW BUS 199125
RUN FOR 4.5 CYCLES PRINT 0 PLOT 7
CLEAR BUS FAULT 199125
DISCONNECT LINE FROM BUS 199125 TO BUS 199120
RUN FOR 10.5 CYCLES PRINT 0
DISCONNECT BUS 199002
DISCONNECT BUS 199003
RUN TO 5 SECONDS PRINT 0 PLOT 15
run to 10 seconds, print=0, plot=15
end
stop
ECHO
@END
```

```
MENU,OFF      /* FORCE MENU TO CORRECT STATUS
PSAS
1

RECOVER FROM win13-iatr.snp AND 2013XP-cnv.sav
PSS
TEXT
TEXT CONTINGENCY A08
TEXT 3 PHASE FAULT ON L8002 AT ONSLOW
TEXT CLEARED IN 4.5 CYCLES
TEXT NO SPS
TEXT
PDEV
2
a08-3p_8002_67n-2013XP.pdv
FIN
START, OUTPUT = a08-3p_8002_67n-2013XP.out
RUN TO 0 SECONDS, PRINT=0
APPLY FAULT AT ONSLOW BUS 199125
RUN FOR 4.5 CYCLES PRINT 0
CLEAR BUS FAULT 199125
TRIP BRANCH FROM BUS 199125 to bus 199195
RUN FOR 10.5 CYCLES PRINT 0 PLOT 7
RUN TO 5 SECONDS PRINT 0 PLOT 15
run to 10 seconds, print=0, plot=15
end
stop
ECHO
@END
```

```
MENU,OFF      /* FORCE MENU TO CORRECT STATUS
PSAS
1

RECOVER FROM win13-iatr.snp AND 2013WP-DSM-NS-200-cnv.sav
PSS
TEXT
TEXT CONTINGENCY A09s
TEXT 3 PHASE FAULT ON L8001 AT ONSLOW
TEXT CLEARED IN 4.5 CYCLES
TEXT NO SPS
TEXT
PDEV
2
a09s-3p_8001_67n-2013WP-DSM-NS-200.pdv
FIN
START, OUTPUT = a09s-3p_8001_67n-2013WP-DSM-NS-200.out
RUN TO 0 SECONDS, PRINT=0
APPLY FAULT AT ONSLOW BUS 199125
RUN FOR 4.5 CYCLES PRINT 0
CLEAR BUS FAULT 199125
DISCONNECT BUS 190381
RUN FOR 10.5 CYCLES PRINT 0 PLOT 7
disconnect bus 199003
RUN TO 5 SECONDS PRINT 0 PLOT 7
run to 10 seconds, print=0, plot=15
end
stop
ECHO
@END
```

```
MENU,OFF      /* FORCE MENU TO CORRECT STATUS
PSAS
1

RECOVER FROM win13-iatr.snp AND 2013XP-cnv.sav
PSS
TEXT
TEXT CONTINGENCY A10
TEXT 3 PHASE FAULT ON L6503 AT TRENTON
TEXT CLEARED IN 5 CYCLES
TEXT NO SPS
TEXT
PDEV
2
a10-3p_6503_50n-2013XP.pdv
FIN
START, OUTPUT = a10-3p_6503_50n-2013XP.out
RUN TO 0 SECONDS, PRINT=0
APPLY FAULT AT TRENTON BUS 199090
RUN FOR 5 CYCLES PRINT 0
CLEAR BUS FAULT 199090
DISCONNECT BUS 199100
RUN to 3.1 seconds PRINT 0 PLOT 7
APPLY FAULT AT ONSLOW BUS 199110 impedance 2.9 29.0 OHMS
RUN FOR 3 CYCLES PRINT 0 PLOT 7
CLEAR FAULT BUS 199110
RUN TO 5 SECONDS PRINT 0 PLOT 9
run to 10 seconds, print=0, plot=15
end
stop
ECHO
@END
```

```
MENU,OFF      /* FORCE MENU TO CORRECT STATUS
PSAS
1

recover data from win13-iatr.snp and 2013XP-cnv.sav
start, output = a101s-b1_3ph_79n_nrecl-2013XP.out
pss
text ...
text ... CONTINGENCY A101
text ... 3 phase fault on Hopewell Bus 79N-B61, cleared in
text ... 4 cycles, no reclosing
text ... No SPS
text ...
pdev
2
a101s-b1_3ph_79n_nrecl-2013XP.pdv
fin
run to 0 seconds, print=0
apply fault on bus 199121
run to 4 cycles, print=0
trip line from bus 199121 to bus 199090 ckt 1
trip line from bus 199121 to bus 199090 ckt 2
run to 5 cycles, print=0
clear fault
trip line from bus 199120 to bus 199045 ckt 1
disconnect bus 199121
run to 16 cycles, print=0
run to 5 seconds, print=0, plot=9
run to 10 seconds, print=0, plot=15
hold results in temp.snp and a101s-b1_3ph_79n_nrecl-2013XP.sav
end
stop
ECHO
@END
```

```
MENU,OFF      /* FORCE MENU TO CORRECT STATUS
PSAS
1

recover data from win13-iatr.snp and 2013XP-cnv.sav
start, output = a101s-b1_3ph_79n_nrecl-2013XP.out
pss
text ...
text ... CONTINGENCY A101
text ... 3 phase fault on Hopewell Bus 79N-B61, cleared in
text ... 4 cycles, no reclosing
text ... Lingan 3 tripped by SPS at 16 cycles
text ...
pdev
2
a101s-b1_3ph_79n_nrecl-2013XP.pdv
fin
run to 0 seconds, print=0
apply fault on bus 199121
run to 4 cycles, print=0
trip line from bus 199121 to bus 199090 ckt 1
trip line from bus 199121 to bus 199090 ckt 2
run to 5 cycles, print=0
clear fault
trip line from bus 199120 to bus 199045 ckt 1
disconnect bus 199121
run to 16 cycles, print=0
disconnect bus 199003
run to 5 seconds, print=0, plot=9
run to 10 seconds, print=0, plot=15
hold results in temp.snp and a101s-b1_3ph_79n_nrecl-2013XP.sav
end
stop
ECHO
@END
```

```
MENU,OFF      /* FORCE MENU TO CORRECT STATUS
PSAS
1

recover data from win13-iatr.snp and 2013XP-cnv.sav
start, output = a101ss-b1_3ph_79n_nrecl-2013XP.out
pss
text ...
text ... CONTINGENCY A101
text ... 3 phase fault on Hopewell Bus 79N-B61, cleared in
text ... 4 cycles, no reclosing
text ... Lingan 2 and 3 tripped by SPS at 16 cycles
text ...
pdev
2
a101ss-b1_3ph_79n_nrecl-2013XP.pdv
fin
run to 0 seconds, print=0
apply fault on bus 199121
run to 4 cycles, print=0
trip line from bus 199121 to bus 199090 ckt 1
trip line from bus 199121 to bus 199090 ckt 2
run to 5 cycles, print=0
clear fault
trip line from bus 199120 to bus 199045 ckt 1
disconnect bus 199121
run to 16 cycles, print=0
disconnect bus 199003
disconnect bus 199002
run to 5 seconds, print=0, plot=9
run to 10 seconds, print=0, plot=15
hold results in temp.snp and a101ss-b1_3ph_79n_nrecl-2013XP.sav
end
stop
ECHO
@END
```

```
MENU,OFF      /* FORCE MENU TO CORRECT STATUS
PSAS
1

recover data from win13-iatr.snp and 2013XP-cnv.sav
start, output = a102-b61_3ph_1n_nrecl-2013XP.out
pss
text ...
text ... CONTINGENCY A102
text ... 3 phase fault on Onslow Bus 1N-B61, cleared in
text ... 6 cycles, no reclosing
text ... No SPS
text ...
pdev
2
a102-b61_3ph_1n_nrecl-2013XP.pdv
fin
run to 0 seconds, print=0
apply fault on bus 199110
run to 6 cycles, print=0
trip line from bus 199110 to bus 199130 ckt 1
trip line from bus 199110 to bus 199112 ckt 1
trip line from bus 199110 to bus 199154 ckt 1
change mvarb shunt on bus 199110 to 0 mvar
clear fault
run to 5 seconds, print=0, plot=9
run to 10 seconds, print=0, plot=15
hold results in temp.snp and a102-b61_3ph_1n_nrecl-2013XP.sav
end
stop
ECHO
@END
```

```
MENU,OFF      /* FORCE MENU TO CORRECT STATUS
PSAS
1

recover data from win13-iatr.snp and 2013XP-cnv.sav
start, output = a103-L6503_3ph_1n_recl-2013XP.out
pss
text ...
text ... CONTINGENCY A103
text ... 3 phase fault on Onslow Bus 1N-B61, cleared in
text ... 6 cycles, no reclosing
text ... No SPS
text ...
pdev
2
a103-L6503_3ph_1n_recl-2013XP.pdv
fin
run to 0 seconds, print=0
apply fault on bus 199110
run to 6 cycles, print=0
disconnect bus 199134
disconnect bus 199540
clear fault
run to 5 seconds, print=0, plot=9
apply fault on bus 199110
run for 4 cycles
clear fault
run to 10 seconds, print=0, plot=15
hold results in temp.snp and a103-L6503_3ph_1n_recl-2013XP.sav
end
stop
ECHO
@END
```

```
MENU,OFF      /* FORCE MENU TO CORRECT STATUS
PSAS
1

recover data from win13-iatr.snp and 2013XP-cnv.sav
start, output = a104-120h-b61_3ph_nrecl-2013XP.out
pss
text ...
text ... CONTINGENCY A104
text ... 3 phase fault on Brushy Hill Bus 120H-B61, cleared in
text ... 6 cycles, no reclosing
text ... No SPS
text ...
pdev
2
a104-120h-b61_3ph_nrecl-2013XP.pdv
fin
run to 0 seconds, print=0
apply fault on bus 199201
run to 6 cycles, print=0
trip branch from bus 199201 to bus 199200 ckt 1
clear fault
run to 5 seconds, print=0, plot=9
run to 10 seconds, print=0, plot=15
hold results in temp.snp and a104-120h-b61_3ph_nrecl-2013XP.sav
end
stop
ECHO
@END
```

```
MENU,OFF      /* FORCE MENU TO CORRECT STATUS
PSAS
1

recover data from win13-iatr.snp and 2013XP-cnv.sav
start, output = a105-L6012_3ph_recl-2013XP.out
pss
text ...
text ... CONTINGENCY A105
text ... 3 phase fault on L6012 at Brushy Hill, cleared in
text ... 6 cycles,  reclosing in 5 sec
text ... No SPS
text ...
pdev
2
a105-L6012_3ph_recl-2013XP.pdv
fin
run to 0 seconds, print=0
apply fault on bus 199201
run to 6 cycles, print=0
trip branch from bus 199201 to bus 199300 ckt 1
clear fault
run to 5 seconds, print=0, plot=9
apply fault on bus 199201
run for 4 cycles, print=0
clear fault
run to 10 seconds, print=0, plot=15
hold results in temp.snp and a105-L6012_3ph_recl-2013XP.sav
end
stop
ECHO
@END
```

```
MENU,OFF      /* FORCE MENU TO CORRECT STATUS
PSAS
1

recover data from win13-iatr.snp and 2013XP-cnv.sav
start, output = a106-103h-b62_3ph_nrecl-2013XP.out
pss
text ...
text ... CONTINGENCY A106
text ... 3 phase fault on Lakeside Bus 103H-B62, cleared in
text ... 6 cycles, no reclosing
text ... No SPS
text ...
pdev
2
a106-103h-b62_3ph_nrecl-2013XP.pdv
fin
run to 0 seconds, print=0
apply fault on bus 199190
run to 6 cycles, print=0
trip branch from bus 199190 to bus 199184 ckt 1
disconnect bus 199191
disconnect bus 199308
clear fault
run to 5 seconds, print=0, plot=9
run to 10 seconds, print=0, plot=15
hold results in temp.snp and a106-103h-b62_3ph_nrecl-2013XP.sav
end
stop
ECHO
@END
```

```
MENU,OFF      /* FORCE MENU TO CORRECT STATUS
PSAS
1

recover data from win13-iatr.snp and 2013XP-cnv.sav
start, output = a107-l6003_3ph_recl-2013XP.out
pss
text ...
text ... CONTINGENCY A107
text ... 3 phase fault l6003 at Sackville, cleared in
text ... 6 cycles,  reclosing attempt in 5 sec
text ... No SPS
text ...
pdev
2
a107-l6003_3ph_recl-2013XP.pdv
fin
run to 0 seconds, print=0
apply fault on bus 199184
run to 6 cycles, print=0
clear fault
trip branch from bus 199184 to bus 199165 ckt 1
run to 5 seconds, print=0, plot=9
apply fault on bus 199184
run for 4 cycles print=0
clear fault
run to 10 seconds, print=0, plot=15
hold results in temp.snp and a107-l6003_3ph_recl-2013XP.sav
end
stop
ECHO
@END
```

```
MENU,OFF      /* FORCE MENU TO CORRECT STATUS
PSAS
1

recover data from win13-iatr.snp and 2013XP-cnv.sav
start, output = a107F-l6003_3ph_recl-2013XP.out
pss
text ...
text ... CONTINGENCY A107F - Pimary fails
text ... 3 phase fault l6003 at Sackville, cleared in
text ... 6 cycles,  reclosing attempt from 91H in 3 sec
text ... No SPS
text ...
pdev
2
a107F-l6003_3ph_recl-2013XP.pdv
fin
run to 0 seconds, print=0
apply fault on Sackville bus 199184
run for 6 cycles, print=0
clear fault
trip line L6003 from bus 199184 to bus 199165 ckt 1
apply fault on 90H end of L6003 bus 199165 impedance 1.0 5.4 ohms
run for 21 cycles, print=0, plot=9
clear fault
run to 3 seconds, print=0, plot=9
apply fault on 90H end of L6003 bus 199165 impedance 1.0 5.4 ohms
run for 4 cycles print=0
clear fault
run to 10 seconds, print=0, plot=15
end
stop
ECHO
@END
```

```
MENU,OFF      /* FORCE MENU TO CORRECT STATUS
PSAS
1

recover data from win13-iatr.snp and 2013XP-cnv.sav
start, output = a108-l6003_91H_3ph_recl-2013XP.out
pss
text ...
text ... CONTINGENCY A108
text ... 3 phase fault l6003 at Tufts Cove, cleared in
text ... 6 cycles,  reclosing attempt from TC in 3 sec
text ... No SPS
text ...
pdev
2
a108-l6003_91H_3ph_recl-2013XP.pdv
fin
run to 0 seconds, print=0
apply fault on bus 199165
run to 6 cycles, print=0
clear fault
trip branch from bus 199184 to bus 199165 ckt 1
run to 3 seconds, print=0, plot=9
apply fault on bus 199165
run for 4 cycles print=0
clear fault
run to 10 seconds, print=0, plot=15
hold results in temp.snp and a108-l6003_91H_3ph_recl-2013XP.sav
end
stop
ECHO
@END
```

```
MENU,OFF      /* FORCE MENU TO CORRECT STATUS
PSAS
1

recover data from win13-iatr.snp and 2013XP-cnv.sav
start, output = a108F-l6003_91H_3ph_recl-2013XP.out
pss
text ...
text ... CONTINGENCY a108F
text ... 3 phase fault l6003 at Tufts Cove, cleared in
text ... 6 cycles at TC, 21cy at Sackville,  reclosing attempt from TC in 3 sec
text ... No SPS
text ...
pdev
2
a108F-l6003_91H_3ph_recl-2013XP.pdv
fin
run to 0 seconds, print=0
apply fault on 90H bus 199165
run for 6 cycles, print=0
clear fault
trip line L6003 from bus 199184 to bus 199165 ckt 1
apply fault on 91H end of L6003 bus 199184 impedance 1.0 5.4 ohms
run for 21 cycles, print=0, plot=9
clear fault
run to 3 seconds, print=0, plot=9
apply fault on bus 199165
run for 4 cycles print=0
clear fault
run to 10 seconds, print=0, plot=15
hold results in temp.snp and a108F-l6003_91H_3ph_recl-2013XP.sav
end
stop
ECHO
@END
```

```
MENU,OFF      /* FORCE MENU TO CORRECT STATUS
PSAS
1

recover data from win13-iatr.snp and 2013XP-cnv.sav
start, output = a109-l6004_90H_3ph_recl-2013XP.out
pss
text ...
text ... CONTINGENCY A108
text ... 3 phase fault l6004 at Sackville, cleared in
text ... 6 cycles,  reclosing attempt from TC in 4 sec
text ... No SPS
text ...
pdev
2
a109-l6004_90H_3ph_rec-2013XP.pdv
fin
run to 0 seconds, print=0
apply fault on bus 199184
run to 6 cycles, print=0
clear fault
disconnect bus 199503
run to 4.1 seconds, print=0, plot=9
apply fault on bus 199184
run for 4 cycles print=0
clear fault
run to 10 seconds, print=0, plot=15
hold results in temp.snp and a109-l6004_90H_3ph_rec-2013XP.sav
end
stop
```

```
MENU,OFF      /* FORCE MENU TO CORRECT STATUS
PSAS
1

recover data from win13-iatr.snp and 2013XP-cnv.sav
start, output = a110-l6523_3ph_recl-2013XP.out
pss
text ...
text ... CONTINGENCY A110
text ... 3 phase fault l6523 at Stora, cleared in
text ... 6 cycles,  reclosing attempt from TUP in 5 sec
text ... No SPS
text ...
pdev
2
a110-l6523_3ph_recl-2013XP.pdv
fin
run to 0 seconds, print=0
apply fault on bus 199053
run to 6 cycles, print=0
clear fault
trip branch from bus 199053 to bus 199052 ckt 1
run to 5 seconds, print=0, plot=9
apply fault on bus 199053
run for 4 cycles print=0
clear fault
run to 10 seconds, print=0, plot=15
hold results in temp.snp and a110-l6523_3ph_recl-2013XP.sav
end
stop
ECHO
@END
```

```
MENU,OFF      /* FORCE MENU TO CORRECT STATUS
PSAS
1

recover data from win13-iatr.snp and 2013XP-cnv.sav
start, output = a112-l5049_3ph_nrecl-2013XP.out
pss
text ...
text ... CONTINGENCY A112
text ... 3 phase fault L5049 at 91H, cleared in
text ... 9 cycles,  no reclosing
text ... No SPS
text ...
pdev
2
a112-l5049_3ph_nrecl-2013XP.pdv
fin
run to 0 seconds, print=0
apply fault on bus 199166
run to 9 cycles, print=0
clear fault
trip branch from bus 199166 to bus 199170 ckt 1
run to 5 seconds, print=0, plot=9
run to 10 seconds, print=0, plot=15
hold results in temp.snp and a112-l5049_3ph_nrecl-2013XP.sav
end
stop
ECHO
@END
```

```
MENU,OFF      /* FORCE MENU TO CORRECT STATUS
PSAS
1

recover data from win13-iatr.snp and 2013XP-cnv.sav
start, output = a113-l6009_3ph_recl-2013XP.out
pss
text ...
text ... CONTINGENCY A112
text ... 3 phase fault L6009 at 101H, cleared in
text ... 6 cycles,  reclosing from 90h in 5 sec
text ... No SPS
text ...
pdev
2
a113-l6009_3ph_recl-2013XP.pdv
fin
run to 0 seconds, print=0
apply fault on bus 199185
run to 9 cycles, print=0
clear fault
disconnect bus 199185
run to 5 seconds, print=0, plot=9
apply fault on bus 199184
run for 4 cycles
clear fault
run to 10 seconds, print=0, plot=15
hold results in temp.snp and a113-l6009_3ph_recl-2013XP.sav
end
stop
ECHO
@END
```

```
MENU,OFF      /* FORCE MENU TO CORRECT STATUS
PSAS
1

recover data from win13-iatr.snp and 2013XP-cnv.sav
start, output = a114-b61_3ph_2C_nrecl-2013XP.out
pss
text ...
text ... CONTINGENCY A114
text ... 3 phase fault on 2C-Hastings Bus 1N-B61, cleared in
text ... 6 cycles, no reclosing
text ... No SPS
text ...
pdev
2
a114-b61_3ph_2C_nrecl-2013XP.pdv
fin
run to 0 seconds, print=0
apply fault on bus 199051
run to 6 cycles, print=0
trip line from bus 199051  to bus 199053 ckt 1
trip line from bus 199051  to bus 199050 ckt 1
trip line from bus 199051 to bus  199057 ckt 1
clear fault
run to 5 seconds, print=0, plot=9
run to 10 seconds, print=0, plot=15
hold results in temp.snp and a114-b61_3ph_2C_nrecl-2013XP.sav
end
stop
ECHO
@END
```

```
MENU,OFF      /* FORCE MENU TO CORRECT STATUS
PSAS
1

recover data from win13-iatr.snp and 2013XP-cnv.sav
start, output = a115-b62_3ph_2C_nrecl-2013XP.out
pss
text ...
text ... CONTINGENCY A115
text ... 3 phase fault on 2C-Hastings Bus 1N-B62, cleared in
text ... 6 cycles, no reclosing
text ... No SPS
text ...
pdev
2
a115-b62_3ph_2C_nrecl-2013XP.pdv
fin
run to 0 seconds, print=0
apply fault on bus 199051
run to 6 cycles, print=0
disconnect bus 199059
trip line from bus 199051 to bus 199052 ckt 1
trip line from bus 199051  to bus 199075 ckt 1
trip line from bus 199051  to bus 199057 ckt 1
trip line from bus 199051  to bus 199056 ckt 1
clear fault
run to 5 seconds, print=0, plot=9
run to 10 seconds, print=0, plot=15
hold results in temp.snp and a115-b62_3ph_2C_nrecl-2013XP.sav
end
stop
ECHO
@END
```

```
MENU,OFF      /* FORCE MENU TO CORRECT STATUS
PSAS
1

recover data from win13-iatr.snp and 2013XP-cnv.sav
start, output = a116-l6014_91H_3ph_recl-2013XP.out
pss
text ...
text ... CONTINGENCY a116
text ... 3 phase fault l6014 at Tufts Cove, cleared in
text ... 6 cycles,  reclosing attempt from TC in 10 sec
text ... No SPS
text ...
pdev
2
a116-l6014_91H_3ph_recl-2013XP.pdv
fin
run to 0 seconds, print=0
apply fault on bus 199165
run to 6 cycles, print=0
clear fault
trip branch from bus 199165 to bus 199198 ckt 1
run to 10 seconds, print=0, plot=9
apply fault on bus 199165
run for 4 cycles print=0
clear fault
run to 15 seconds, print=0, plot=15
hold results in temp.snp and a116-l6014_91H_3ph_recl-2013XP.sav
end
stop
ECHO
@END
```

```
MENU,OFF      /* FORCE MENU TO CORRECT STATUS
PSAS
1

recover data from win13-iatr.snp and 2013XP-cnv.sav
start, output = a116F-l6014_91H_3ph_recl-2013XP.out
pss
text ...
text ... CONTINGENCY a116F
text ... 3 phase fault l6014 at Tufts Cove, cleared in
text ... 6 cycles from TC, 21 cycles from KR
text ... reclosing attempt from TC in 10 sec
text ... No SPS
text ...
pdev
2
a116F-l6014_91H_3ph_recl-2013XP.pdv
fin
run to 0 seconds, print=0
apply fault on 91H bus 199165
run for 6 cycles, print=0
clear fault
trip Line L6014 from bus 199165 to bus 199198 ckt 1
apply fault on kemptrd end of L6014 bus 199198 impedance 0.24 1.8 ohms
run for 21 cycles print=0
clear fault
run to 10 seconds, print=0, plot=9
apply fault on bus 199165
run for 4 cycles print=0
clear fault
run to 15 seconds, print=0, plot=15
hold results in temp.snp and a116F-l6014_91H_3ph_recl-2013XP.sav
end
stop
ECHO
@END
```

```
MENU,OFF      /* FORCE MENU TO CORRECT STATUS
PSAS
1

recover data from win13-iatr.snp and 2013XP-cnv.sav
start, output = a117.1F-l6014_104H_3ph_recl-2013XP.out
pss
text ...
text ... CONTINGENCY a117.1F
text ... 3 phase fault l6014 at 104H Kempt Rd, cleared in
text ... 6 cycles from 104H, 21 cycles from 91h
text ... reclosing attempt from TC in 10 sec
text ... TC units unstable at 1 sec.
text ...
pdev
2
a117.1F-l6014_104H_3ph_recl-2013XP.pdv
fin
run to 0 seconds, print=0
apply fault on bus 199198
run for 6 cycles, print=0
clear fault
trip branch from bus 199165 to bus 199198 ckt 1
apply fault on bus 199165 impedance 0.24 1.8 ohms
run for 21 cycles print=0
clear fault
run to 1 second, print=0
disconnect bus 199169
disconnect bus 199167
disconnect bus 199168
run to 10 seconds, print=0, plot=9
apply fault on bus 199165 impedance 0.24 1.8 ohms
run for 4 cycles print=0
clear fault
run to 15 seconds, print=0, plot=15
end
stop
ECHO
@END
```

```
MENU,OFF      /* FORCE MENU TO CORRECT STATUS
PSAS
1

recover data from win13-iatr.snp and 2013XP-cnv.sav
start, output = a117-l6014_104H_3ph_recl-2013XP.out
pss
text ...
text ... CONTINGENCY a117
text ... 3 phase fault l6014 at 104H Kempt Rd, cleared in
text ... 6 cycles from 104H, 21 cycles from 91h
text ... reclosing attempt from TC in 10 sec
text ...
text ...
pdev
2
a117-l6014_104H_3ph_recl-2013XP.pdv
fin
run to 0 seconds, print=0
apply fault on bus 199198
run for 6 cycles, print=0
clear fault
trip branch from bus 199165 to bus 199198 ckt 1
run to 10 seconds, print=0, plot=9
apply fault on bus 199165 impedance 0.24 1.8 ohms
run for 4 cycles print=0
clear fault
run to 15 seconds, print=0, plot=15
end
stop
ECHO
@END
```

```
MENU,OFF      /* FORCE MENU TO CORRECT STATUS
PSAS
1

recover data from win13-iatr.snp and 2013XP-cnv.sav
start, output = a117F-l6014_104H_3ph_recl-2013XP.out
pss
text ...
text ... CONTINGENCY a117F
text ... 3 phase fault l6014 at 104H Kempt Rd, cleared in
text ... 6 cycles from 104H, 21 cycles from 91h
text ... reclosing attempt from TC in 10 sec
text ...
text ...
pdev
2
a117F-l6014_104H_3ph_recl-2013XP.pdv
fin
run to 0 seconds, print=0
apply fault on bus 199198
run for 6 cycles, print=0
clear fault
trip branch from bus 199165 to bus 199198 ckt 1
apply fault on bus 199165 impedance 0.24 1.8 ohms
run for 21 cycles print=0
clear fault
run to 10 seconds, print=0, plot=9
apply fault on bus 199165 impedance 0.24 1.8 ohms
run for 4 cycles print=0
clear fault
run to 15 seconds, print=0, plot=15
end
stop
ECHO
@END
```

```
MENU,OFF      /* FORCE MENU TO CORRECT STATUS
PSAS
1

recover data from win13-iatr.snp and 2013XP-cnv.sav
start, output = a118-l6035_1H_3ph_nrecl-2013XP.out
pss
text ...
text ... CONTINGENCY a118
text ... 3 phase fault l6035 at 1H-Water St, cleared in
text ... 6 cycles
text ... no reclosing
text ... No SPS
text ...
pdev
2
a118-l6035_1H_3ph_nrecl-2013XP.pdv
fin
run to 0 seconds, print=0
apply fault on WAS bus 199193
run for 6 cycles, print=0
clear fault
trip branch from bus 199193 to bus 199198 ckt 1
run to 10 seconds, print=0, plot=9
run to 15 seconds, print=0, plot=15
end
stop
ECHO
@END
```

```
MENU,OFF      /* FORCE MENU TO CORRECT STATUS
PSAS
1

recover data from win13-iatr.snp and 2013XP-cnv.sav
start, output = a118F-l6035_1H_3ph_nrecl-2013XP.out
pss
text ...
text ... CONTINGENCY a118F
text ... 3 phase fault l6035 at 1H-Water St, cleared in
text ... 6 cycles from 1h, 21 cycles from 104Hh
text ... no reclosing
text ... No SPS
text ...
pdev
2
a118F-l6035_1H_3ph_nrecl-2013XP.pdv
fin
run to 0 seconds, print=0
apply fault on WAS bus 199193
run for 6 cycles, print=0
clear fault
trip branch from bus 199193 to bus 199198 ckt 1
apply fault on was end of l6035 bus 199198 impedance 0.56 4.0 ohms
run for 21 cycles print=0
clear fault
run to 10 seconds, print=0, plot=9
run to 15 seconds, print=0, plot=15
end
stop
ECHO
@END
```

```
MENU,OFF      /* FORCE MENU TO CORRECT STATUS
PSAS
1

recover data from win13-iatr.snp and 2013XP-cnv.sav
start, output = a119-l6007_108H_3ph_recl-2013XP.out
pss
text ...
text ... CONTINGENCY a119
text ... 3 phase fault l6007 at Burnside, cleared in
text ... 6 cycles
text ... reclose attempt in 5 sec from Burnside
text ... No SPS
text ...
pdev
2
a119-l6007_108H_3ph_recl-2013XP.pdv
fin
run to 0 seconds, print=0
apply fault on 108H bus 199187
run for 6 cycles, print=0
clear fault
trip Line L6007 from bus 199187 to bus 199165 ckt 1
run to 5 seconds, print=0, plot=9
apply fault on 108H bus 199187
run for 4 cycles, print=0
clear fault
run to 10 seconds, print=0, plot=9
run to 15 seconds, print=0, plot=15
end
stop
ECHO
@END
```

```
MENU,OFF      /* FORCE MENU TO CORRECT STATUS
PSAS
1

recover data from win13-iatr.snp and 2013XP-cnv.sav
start, output = a119F-l6007_108H_3ph_recl-2013XP.out
pss
text ...
text ... CONTINGENCY a119F
text ... 3 phase fault l6007 at Burnside, cleared in
text ... 6 cycles from BS, 21 cycles from 91Hh
text ... reclose attempt in 5 sec from Burnside
text ... No SPS
text ...
pdev
2
a119F-l6007_108H_3ph_recl-2013XP.pdv
fin
run to 0 seconds, print=0
apply fault on 108H bus 199187
run for 6 cycles, print=0
clear fault
trip Line L6007 from bus 199187 to bus 199165 ckt 1
apply fault on BS end of l6007 bus 199165 impedance 0.4 2.1 ohms
run for 21 cycles print=0
clear fault
run to 5 seconds, print=0, plot=9
apply fault on 108H bus 199187
run for 4 cycle, print=0
clear fault
run to 10 seconds, print=0, plot=9
run to 15 seconds, print=0, plot=15
end
stop
ECHO
@END
```

```
MENU,OFF      /* FORCE MENU TO CORRECT STATUS
PSAS
1

RECOVER FROM win13-iatr.snp AND 2013XP-cnv.sav
START, OUTPUT = a12-3p_79n-2013XP.out
PSS
TEXT
TEXT CONTINGENCY A12S
TEXT 3 PHASE FAULT ON T81 AT WOODBINE
TEXT CLEARED IN 4.5 CYCLES
TEXT SPS DROPS LINGAN UNIT 2
TEXT
PDEV
2
a12-3p_79n-2013XP.pdv
FIN
end
TEXT, RUN TO 0 SECONDS, PRINT=0
RUN
  0.000       0    5    0
TEXT, APPLY FAULT AT HOPEWELL BUS 199120
ALTR
0
1
0
1
199120                                  /* HOPEWELL345.00
1
,      0.000        -0.2000E+10
Q
0
TEXT, RUN FOR 4.5 CYCLES PRINT 0 PLOT 7
RUN
 0.7500E-01    0    7    0
TEXT, CLEAR BUS FAULT 199120
ALTR
0
1
0
1
199120                                  /* HOPEWELL345.00
1
,      0.000          0.000
Q
0
TEXT, DISCONNECT BUS 199121
LOFL
DSCN
199121                                  /* HOPEWELL138.00
0
0 / EXTRA RESPONSE IN CASE TYPE 4
FACT
```

```
RTRN
TEXT SPLIT BUS AT HOPEWELL TO CREATE LINE-END OPEN
LOFL
SPLT
199120
199990

1
0
0
0
CHNG
3
199120,199990,1
1
0


-1
FACT
TYSL
RTRN
TEXT, RUN to 9.0 CYCLES print = 0
RUN
  0.1500       0    5    0
TEXT, run to 1 second print=0
RUN
   1.000       0    5    0
TEXT, disconnect bus 199120
LOFL
DSCN
199120                                  /* HOPEWELL345.00
199990
0
0 / EXTRA RESPONSE IN CASE TYPE 4
FACT
RTRN
TEXT, RUN TO 5 SECONDS PRINT 0 PLOT 7
RUN
   5.000       0    7    0
TEXT, run to 10 seconds, print=0, plot=15
RUN
   15.00       0   15    0
TEXT ***
TEXT ***
TEXT *** THIS RUN WAS GENERATED FROM RESPONSE FILE PSAS005.IDV
TEXT *** MANUALLY DELETE FILE WHEN DESIRED
TEXT ***
TEXT ***
stop
@END
```

```
MENU,OFF      /* FORCE MENU TO CORRECT STATUS
PSAS
1

recover data from win13-iatr.snp and 2013XP-cnv.sav
start, output = a120-l6008_103H_3ph_recl-2013XP.out
pss
text ...
text ... CONTINGENCY a120
text ... 3 phase fault l6008 at 103H-LAK, cleared in
text ... 6 cycles
text ... reclose attempt in 5 sec from 90H
text ... No SPS
text ...
pdev
2
a120-l6008_103H_3ph_recl-2013XP.pdv
fin
run to 0 seconds, print=0
apply fault on 103H bus 199190
run for 6 cycles, print=0
clear fault
trip Line L6008 from bus 199190 to bus 199184 ckt 1
run to 5 seconds, print=0, plot=9
apply fault on LAK end of l6008 bus 199184 impedance 1 6.8 ohms
run for 4 cycle, print=0
clear fault
run to 10 seconds, print=0, plot=9
run to 15 seconds, print=0, plot=15
end
stop
ECHO
@END
```

```
MENU,OFF      /* FORCE MENU TO CORRECT STATUS
PSAS
1

recover data from win13-iatr.snp and 2013XP-cnv.sav
start, output = a120F-l6008_103H_3ph_recl-2013XP.out
pss
text ...
text ... CONTINGENCY a120F
text ... 3 phase fault l6008 at 103H-LAK, cleared in
text ... 6 cycles from 103H, 21 cycles from 90H
text ... reclose attempt in 5 sec from 90H
text ... No SPS
text ...
pdev
2
a120F-l6008_103H_3ph_recl-2013XP.pdv
fin
run to 0 seconds, print=0
apply fault on 103H bus 199190
run for 6 cycles, print=0
clear fault
trip Line L6008 from bus 199190 to bus 199184 ckt 1
apply fault on LAK end of l6008 bus 199184 impedance 1 6.8 ohms
run for 21 cycles print=0
clear fault
run to 5 seconds, print=0, plot=9
apply fault on LAK end of l6008 bus 199184 impedance 1 6.8 ohms
run for 4 cycle, print=0
clear fault
run to 10 seconds, print=0, plot=9
run to 15 seconds, print=0, plot=15
end
stop
ECHO
@END
```

```
MENU,OFF      /* FORCE MENU TO CORRECT STATUS
PSAS
1

recover data from win13-iatr.snp and 2013XP-cnv.sav
start, output = a121-l6010_120H_3ph_recl-2013XP.out
pss
text ...
text ... CONTINGENCY a121
text ... 3 phase fault l6010 at 120H-BH, cleared in
text ... 6 cycles from 120H, 21 cycles from 90H
text ... reclose attempt in 3 sec from 120H
text ... No SPS
text ...
pdev
2
a121-l6010_120H_3ph_recl-2013XP.pdv
fin
run to 0 seconds, print=0
apply fault on 103H bus 199201
run for 6 cycles, print=0
clear fault
trip Line L6010 from bus 199201 to bus 199184 ckt 1
run to 3 seconds, print=0, plot=9
apply fault on bus 199201
run for 4 cycle, print=0
clear fault
run to 10 seconds, print=0, plot=9
run to 15 seconds, print=0, plot=15
end
stop
ECHO
@END
```

```
MENU,OFF      /* FORCE MENU TO CORRECT STATUS
PSAS
1

recover data from win13-iatr.snp and 2013XP-cnv.sav
start, output = a121F-l6010_120H_3ph_recl-2013XP.out
pss
text ...
text ... CONTINGENCY a121F
text ... 3 phase fault l6010 at 120H-BH, cleared in
text ... 6 cycles from 120H, 21 cycles from 90H
text ... reclose attempt in 3 sec from 120H
text ... No SPS
text ...
pdev
2
a121F-l6010_120H_3ph_recl-2013XP.pdv
fin
run to 0 seconds, print=0
apply fault on 103H bus 199201
run for 6 cycles, print=0
clear fault
trip Line L6010 from bus 199201 to bus 199184 ckt 1
apply fault on 120h end of l6010 bus 199184 impedance 0.8 5.9 ohms
run for 21 cycles print=0
clear fault
run to 3 seconds, print=0, plot=9
apply fault on bus 199201
run for 4 cycle, print=0
clear fault
run to 10 seconds, print=0, plot=9
run to 15 seconds, print=0, plot=15
end
stop
ECHO
@END
```

```
MENU,OFF      /* FORCE MENU TO CORRECT STATUS
PSAS
1

recover data from win13-iatr.snp and 2013XP-cnv.sav
start, output = a122-l6042_113H_3ph_recl-2013XP.out
pss
text ...
text ... CONTINGENCY a122
text ... 3 phase fault l6042 at 113H-DE, cleared in
text ... 6 cycles
text ... reclose attempt in 5 sec from 91H
text ... No SPS
text ...
pdev
2
a122-l6042_113H_3ph_recl-2013XP.pdv
fin
run to 0 seconds, print=0
apply fault on 113H bus 199161
run for 6 cycles, print=0
clear fault
trip Line L6042 from bus 199165 to bus 199161 ckt 2
run to 5 seconds, print=0, plot=9
apply fault on 113h end of l6042 bus 199165 impedance 1.05 6.2 ohms
run for 4 cycle, print=0
clear fault
run to 10 seconds, print=0, plot=9
run to 15 seconds, print=0, plot=15
end
stop
ECHO
@END
```

```
MENU,OFF      /* FORCE MENU TO CORRECT STATUS
PSAS
1

recover data from win13-iatr.snp and 2013XP-cnv.sav
start, output = a122F-l6042_113H_3ph_recl-2013XP.out
pss
text ...
text ... CONTINGENCY a122F
text ... 3 phase fault l6042 at 113H-DE, cleared in
text ... 6 cycles from 113H, 21 cycles from 91H
text ... reclose attempt in 5 sec from 91H
text ... No SPS
text ...
pdev
2
a122F-l6042_113H_3ph_recl-2013XP.pdv
fin
run to 0 seconds, print=0
apply fault on 113H bus 199161
run for 6 cycles, print=0
clear fault
trip Line L6042 from bus 199165 to bus 199161 ckt 2
apply fault on 113h end of l6042 bus 199165 impedance 1.05 6.2 ohms
run for 21 cycles print=0
clear fault
run to 5 seconds, print=0, plot=9
apply fault on 113h end of l6042 bus 199165 impedance 1.05 6.2 ohms
run for 4 cycle, print=0
clear fault
run to 10 seconds, print=0, plot=9
run to 15 seconds, print=0, plot=15
end
stop
ECHO
@END
```

```
MENU,OFF      /* FORCE MENU TO CORRECT STATUS
PSAS
1

RECOVER FROM win13-iatr.snp AND 2013XP-cnv.sav
PSS
TEXT
TEXT CONTINGENCY A12S
TEXT 3 PHASE FAULT ON T81 AT WOODBINE
TEXT CLEARED IN 4.5 CYCLES
TEXT SPS DROPS LINGAN UNIT 2
TEXT
PDEV
2
a12s-3p_79n-2013XP.pdv
FIN
START, OUTPUT = a12s-3p_79n-2013XP.out
end
TEXT, RUN TO 0 SECONDS, PRINT=0
RUN
  0.000       0    5    0
TEXT, APPLY FAULT AT HOPEWELL BUS 199120
ALTR
0
1
0
1
199120                                  /* HOPEWELL345.00
1
,      0.000        -0.2000E+10
Q
0
TEXT, RUN FOR 4.5 CYCLES PRINT 0 PLOT 7
RUN
 0.7500E-01    0    7    0
TEXT, CLEAR BUS FAULT 199120
ALTR
0
1
0
1
199120                                  /* HOPEWELL345.00
1
,      0.000          0.000
Q
0
TEXT, DISCONNECT BUS 199121
LOFL
DSCN
199121                                  /* HOPEWELL138.00
0
0 / EXTRA RESPONSE IN CASE TYPE 4
FACT
```

```
RTRN
TEXT SPLIT BUS AT HOPEWELL TO CREATE LINE-END OPEN
LOFL
SPLT
199120
199990

1
0
0
0
CHNG
3
199120,199990,1
1
0


-1
FACT
TYSL
RTRN
TEXT, RUN to 9.0 CYCLES print = 0
RUN
  0.1500       0    5    0
TEXT, DROP UNIT 2 AT BUS 199002
ALTR
0
1
0
2
199002                                  /* LINGAN2 14.400
0
2
1
0
Q
0
TEXT, run to 1 second print=0
RUN
   1.000       0    5    0
TEXT, disconnect bus 199120
LOFL
DSCN
199120                                  /* HOPEWELL345.00
199990
0
0 / EXTRA RESPONSE IN CASE TYPE 4
FACT
RTRN
TEXT, RUN TO 5 SECONDS PRINT 0 PLOT 7
RUN
   5       0    7    0
TEXT, run to 10 seconds, print=0, plot=15
```

```
RUN
  15      0  15   0
TEXT ***
TEXT ***
TEXT *** THIS RUN WAS GENERATED FROM RESPONSE FILE PSAS005.IDV
TEXT *** MANUALLY DELETE FILE WHEN DESIRED
TEXT ***
TEXT ***
stop
ECHO
@END
```

```
MENU,OFF      /* FORCE MENU TO CORRECT STATUS
PSAS
1

RECOVER FROM win13-iatr.snp AND 2013XP-cnv.sav
PSS
TEXT
TEXT CONTINGENCY A12Ss
TEXT 3 PHASE FAULT ON T81 AT WOODBINE
TEXT CLEARED IN 4.5 CYCLES
TEXT SPS DROPS LINGAN UNIT 2 and 3
TEXT
PDEV
2
a12ss-3p_79n-2013XP.pdv
FIN
START, OUTPUT = a12ss-3p_79n-2013XP.out
end
TEXT, RUN TO 0 SECONDS, PRINT=0
RUN
  0.000       0    5    0
TEXT, APPLY FAULT AT HOPEWELL BUS 199120
ALTR
0
1
0
1
199120                                  /* HOPEWELL345.00
1
,      0.000        -0.2000E+10
Q
0
TEXT, RUN FOR 4.5 CYCLES PRINT 0 PLOT 7
RUN
 0.7500E-01    0    7    0
TEXT, CLEAR BUS FAULT 199120
ALTR
0
1
0
1
199120                                  /* HOPEWELL345.00
1
,      0.000          0.000
Q
0
TEXT, DISCONNECT BUS 199121
LOFL
DSCN
199121                                  /* HOPEWELL138.00
0
0 / EXTRA RESPONSE IN CASE TYPE 4
FACT
```

```
RTRN
TEXT SPLIT BUS AT HOPEWELL TO CREATE LINE-END OPEN
LOFL
SPLT
199120
199990

1
0
0
0
CHNG
3
199120,199990,1
1
0


-1
FACT
TYSL
RTRN
TEXT, RUN to 9.0 CYCLES print = 0
RUN
  0.1500       0    5    0
TEXT, DROP UNIT 2 AT BUS 199002
ALTR
0
1
0
2
199002                                  /* LINGAN2 14.400
199003
0
2
1
0
Q
0
TEXT, run to 1 second print=0
RUN
   1.000       0    5    0
TEXT, disconnect bus 199120
LOFL
DSCN
199120                                  /* HOPEWELL345.00
199990
0
0 / EXTRA RESPONSE IN CASE TYPE 4
FACT
RTRN
TEXT, RUN TO 5 SECONDS PRINT 0 PLOT 7
RUN
   5       0    7    0
```

```
TEXT, run to 10 seconds, print=0, plot=15
RUN
  15       0   15    0
TEXT ***
TEXT ***
TEXT *** THIS RUN WAS GENERATED FROM RESPONSE FILE PSAS005.IDV
TEXT *** MANUALLY DELETE FILE WHEN DESIRED
TEXT ***
TEXT ***
stop
ECHO
@END
```

```
MENU,OFF      /* FORCE MENU TO CORRECT STATUS
PSAS
1

recover data from win13-iatr.snp and 2013XP-cnv.sav
pss
text ...
text ... CONTINGENCY A14
text ... 3 phase fault Lakeside B62, cleared in
text ... 4 cycles, clearing L6008 and L6016
text ...
pdev
2
a14-3ph_103h_b62-2013XP.pdv
fin
start, output = a14-3ph_103h_b62-2013XP.out
run to 0 seconds, print=0
apply fault on bus 199190
run for 4 cycles, print=0
clear fault
trip line from bus 199190 to bus 199184 ckt 1
disconnect bus 199208
disconnect bus 199191
run to 5 seconds, print=0, plot=9
run to 10 seconds, print=0, plot=15
end
end
stop
ECHO
@END
```

```
MENU,OFF      /* FORCE MENU TO CORRECT STATUS
PSAS
1

recover data from win13-iatr.snp and 2013XP-cnv.sav
pss
TEXT ...
TEXT ... CONTINGENCY A99
TEXT ... 3ph FAULT ON Onslow END OF l7004West
TEXT ... clears in 5 cycles
TEXT ...
TEXT ...
PDEV
2
a99.1-7004w_3ph_67N-2013XP.pdv
FIN
START, OUTPUT = a99.1-7004w_3ph_67N-2013XP.out
RUN TO 0 SECONDS, PRINT=0
APPLY FAULT ON BUS 199130
RUN FOR 4.5 CYCLES, PRINT=0
CLEAR FAULT
TRIP LINE FROM BUS 199130 TO BUS 199590 CKT 2
RUN TO 5 SECONDS, PRINT=0 plot 7
run to 10 seconds, PRINT=0 plot 15
END
stop
ECHO
@END
```

```
MENU,OFF      /* FORCE MENU TO CORRECT STATUS
PSAS
1

recover data from win13-iatr.snp and 2013XP-cnv.sav
pss
TEXT ...
TEXT ... CONTINGENCY A99
TEXT ... 3ph FAULT ON dalhousie END OF l7004West
TEXT ... clears in 4.5 cycles
TEXT ...
TEXT ...
PDEV
2
a99.2-7004w_3ph_ir84-2013XP.pdv
FIN
START, OUTPUT = a99.2-7004w_3ph_ir84-2013XP.out
RUN TO 0 SECONDS, PRINT=0
APPLY FAULT ON BUS 199590
RUN FOR 4.5 CYCLES, PRINT=0
CLEAR FAULT
TRIP LINE FROM BUS 199130 TO BUS 199590 CKT 2
RUN TO 5 SECONDS, PRINT=0 plot 7
run to 10 seconds, PRINT=0 plot 15
END
stop
ECHO
@END
```

```
MENU,OFF      /* FORCE MENU TO CORRECT STATUS
pdev
2
autoplot.pdv
odev
2
autoplot.odv
chnf
a07.2s-3p_8003_67n-2013XP.out
subt
1
3 PHASE FAULT ON L8003 AT ONSLOW
1
CLEARED IN 4.5 CYCLES: sps drops lingan 2
@input summer-plot-ps.idv
0
chnf
a08-3p_8002_67n-2013XP.out
subt
1
3 PHASE FAULT ON L8002 AT ONSLOW
1
CLEARED IN 4.5 CYCLES: NO SPS
@input summer-plot-ps.idv
0
chnf
a09-3p_8001_67n-2013XP.out
subt
1
3 PHASE FAULT ON L8001 AT ONSLOW
1
CLEARED IN 4.5 CYCLES: NO SPS
@input summer-plot-ps.idv
0
chnf
a10-3p_6503_50n-2013XP.out
subt
1
3 PHASE FAULT ON L6503 AT TRENTON
1
CLEARED IN 5 CYCLES: NO SPS
@input summer-plot-ps.idv
0
chnf
a12-3p_79n-2013XP.out
subt
1
3 PHASE FAULT ON T81 AT WOODBINE
1
CLEARED IN 4.5 CYCLES: no SPS
@input summer-plot-ps.idv
0
chnf
```

a12s-3p_79n-2013XP.out
subt
1
3 PHASE FAULT ON T81 AT WOODBINE
1
CLEARED IN 4.5 CYCLES: SPS DROPS LINGAN UNIT 2
@input summer-plot-ps.idv
chnf
a14-3ph_103h_b62-2013XP.out
subt
1
3 phase fault Lakeside B62, cleared in
1
4 cycles, clearing L6008 and L6016
@input summer-plot-ps.idv
0
chnf
b01-7012_1ph_88s723-2013XP.out
subt
1
SLG FAULT ON LINGAN END OF 7012
1
88S723 FAILS, CLEARS 7012 AND 7014 IN 15 CYCLES: NO SPS
@input summer-plot-ps.idv
0
chnf
b01s-7012_1ph_88s723-2013XP.out
subt
1
SLG FAULT ON LINGAN END OF 7012
1
88S723 FAILS, CLEARS 7012 AND 7014 IN 15 CYCLES: SPS trips Unit 4
@input summer-plot-ps.idv
0
chnf
b03-7012_1ph_3c715-2013XP.out
subt
1
SLG FAULT ON HASTINGS END OF 7012
1
3C-715 FAILS, CLEARS 7012 AND 7004 IN 17 CYCLES
@input summer-plot-ps.idv
0
chnf
b04-7005_1ph_67n712-2013XP.out
subt
1
SLG FAULT ON ONSLOW END OF 7005
1
67N-712 FAILS, CLEARS 7005 AND 7018 IN 17 CYCLES
@input summer-plot-ps.idv
0
chnf
b04s-7005_1ph_67n712-2013XP.out

subt
1
SLG FAULT ON ONSLOW END OF 7005
1
67N-712 FAILS, CLEARS 7005 AND 7018 IN 17 CYCLES; SPS trips 1 lingan unit
@input summer-plot-ps.idv
0
chnf
b06-8003_1ph_67n812-2013XP.out
subt
1
SLG FAULT ON ONSLOW END OF 8003
1
67N-812 FAILS, CLEARS 8003 AND 8002
@input summer-plot-ps.idv
0
chnf
b06s-8003_1ph_67n812-2013XP.out
subt
1
SLG FAULT ON ONSLOW END OF 8003
1
67N-812 FAILS, CLEARS 8003 AND 8002; sps trips 1 lingan unit
@input summer-plot-ps.idv
0
chnf
b07-pg_8004_79n_bbu-2013XP.out
subt
1
1 PHASE FAULT ON L8004 AT HOPEWELL, BREAKER 79N-810 FAILS
1
BBU TRIPS 8003 IN 15 CYCLES: no sps
@input summer-plot-ps.idv
0
chnf
b07s-pg_8004_79n_bbu-2013XP.out
subt
1
1 PHASE FAULT ON L8004 AT HOPEWELL BREAKER 79N-810 FAILS
1
BBU TRIPS 8003 IN 15 CYCLES: SPS DROPS LINGAN UNIT 2
@input summer-plot-ps.idv
0
chnf
b08-88s_b71_1ph_88s721-2013XP.out
subt
1
1 PHASE FAULT ON L8004 AT HOPEWELL BREAKER 79N-810 FAILS
1
SLG FAULT ON LINGAN bus node between G3 and G4
@input summer-plot-ps.idv
0
chnf
b09-pg_8001_67n_815_bbu-2013XP.out

subt
1
1 PHASE FAULT ON L8001 AT onslow BREAKER 67N-815 FAILS;
1
BBU TRIPS 67N-T82 IN 15 CYCLES; no sps
@input summer-plot-ps.idv
0
chnf
c01-pg_7003_7004_50n-2013XP.out
subt
1
slg flt on separate phases of double ckt tower
1
7003 and 7004 near Trenton cleared in 5 cycles
@input summer-plot-ps.idv
0
chnf
c03-pg_8004_7005_strait-2013XP.out
subt
1
slg flt on separate phases of double ckt tower
1
8004 and 7004 Canso crossing cleared in 4 cycles
@input summer-plot-ps.idv
0
chnf
c03s-pg_8004_7005_strait-2013XP.out
subt
1
slg flt on separate phases of double ckt tower
1
8004 and 7004 Canso crossing sps trips 1 lingan
@input summer-plot-ps.idv
0
chnf
d03-1ph_50n604-2013XP.out
subt
1
1 phase fault on trenton Bus-tie Breaker 50n604
1
5 cycles, no reclosing, clears whole 138 kV station
@input summer-plot-ps.idv
0
chnf
d04-88s721_1ph-2013XP.out
subt
1
SLG FAULT ON LINGAN breaker 88S7211
1
trips lingan 3 and 4 in 4 cycles
@input summer-plot-ps.idv
0
chnf
d05-1n600_1ph-2013XP.out

subt
1
SLG FAULT ON Onslow breaker 1n600
1
clears Onslow 138kv and radial lines
@input summer-plot-ps.idv
0
chnf
e02-lose-tc3-2013XP.out
subt
1
Lose Tufts Cove 3
1
No Fault
@input summer-plot-ps.idv
0
chnf
e03-lose-stora-2013XP.out
subt
1
Lose all load at Stra
1
No Fault
@input summer-plot-ps.idv
0
chnf
a101s-b1_3ph_79n_nrecl-2013XP.out
subt
1
3ph FAULT ON 138kV bus B1 at 79N Hopewell
1
SPS trips lingan unit
@input summer-plot-ps.idv
0
chnf
a102-b61_3ph_1n_nrecl-2013XP.out
subt
1
3 phase fault on Onslow 138kV bus B61
1
trips T72, L6001, T4, capacitor bank
@input summer-plot-ps.idv
0
chnf
a104-120h-b61_3ph_nrecl-2013XP.out
subt
1
3 phase fault on B61 at Brushy Hill 138kV
1
trips 120H-T72
@input summer-plot-ps.idv
0
chnf
a105-L6012_3ph_recl-2013XP.out

subt
1
3 phase fault on L6012 at 120H Brushy
1
Recloses in 5 seconds
@input summer-plot-ps.idv
0
chnf
a106-103h-b62_3ph_nrecl-2013XP.out
subt
1
3 phase fault on B62 at Lakeside
1
trips l6008, l6016, 103h-t61
@input summer-plot-ps.idv
0
chnf
a107-l6003_3ph_recl-2013XP.out
subt
1
3 phase fault on l6003 at sackville
1
recloses from Sackville in 5 seconds
@input summer-plot-ps.idv
0
chnf
a108-l6003_91H_3ph_recl-2013XP.out
subt
1
3 phase fault on l6003 at Tufts cove
1
clears fault in 6 cycles Recloses from tufts cove in 3s
@input summer-plot-ps.idv
0
chnf
a109-l6004_90H_3ph_recl-2013XP.out
subt
1
3 phase fault l6004 at sackville
1
clears fault in 6 cycles, recloses in 4 seconds from TC
@input summer-plot-ps.idv
0
chnf
a110-l6523_3ph_recl-2013XP.out
subt
1
3 phase fault l6523 at stora
1
clears fault in 6 cycles, recloses in 5 seconds from POT
@input summer-plot-ps.idv
0
chnf
a112-l5049_3ph_nrecl-2013XP.out

```
subt
1
3 phase fault l5049 at 91H-Tufts Cove69kV
1
clears fault in 9 cycles, no reclose
@input summer-plot-ps.idv
0
chnf
a113-l6009_3ph_recl-2013XP.out
subt
1
3 phase fault l6009 at 101H Cobequid Rd
1
clears fault in 6 cycles, reclose from Sackville in 5s
@input summer-plot-ps.idv
0
chnf
b101-L6005+L6010_DCT_nrecl-2013XP.out
subt
1
1 phase fault on DCT L6005+L6010 at 120H Brushy
1
clears fault in 6 cycles, no reclose
@input summer-plot-ps.idv
0
chnf
b102-L6011+L6010_DCT_nrecl-2013XP.out
subt
1
1 phase fault on DCT L6011 + L6010 at Brushy 138
1
clears fault in 6 cycles, no reclose
@input summer-plot-ps.idv
0
chnf
b103-L6005+L6016_DCT_nrecl-2013XP.out
subt
1
1 phase fault L6005/L6016 at 120H, cleared in
1
6 cycles, no reclosing
@input summer-plot-ps.idv
0
chnf
b104-L6003+L6009_DCT_nrecl-2013XP.out
subt
1
1 phase fault L6003/L6009 at 90H, cleared in
1
6 cycles, no reclosing
@input summer-plot-ps.idv
0
chnf
b105a-L6003+L6007_DCT_nrecl-2013XP.out
```

```
subt
1
1 phase fault L6003/L6007 at 91H, cleared in 6 cy
1
fault impedance with all generation on
@input summer-plot-ps.idv
0
chnf
b105b-L6003+L6007_DCT_nrecl-2013XP.out
subt
1
1 phase fault L6003/L6007 at 91H, cleared in 6 cy
1
fault impedance with Burnside generation off
@input summer-plot-ps.idv
0
chnf
b105c-L6003+L6007_DCT_nrecl-2013XP.out
subt
1
1 phase fault L6003/L6007 at 91H, cleared in 6 cy
1
fault impedance with burnside and TC 1+2 off
@input summer-plot-ps.idv
0
chnf
c101-79N-606_BBU_nrecl-2013XP.out
subt
1
1 phase fault Hopewell L6507, cleared in 6 cy
1
BBU on Breaker 600 clears the station - no SPS
@input summer-plot-ps.idv
0
chnf
c101s-79N-606_BBU_nrecl-2013XP.out
subt
1
1 phase fault Hopewell L6507, cleared in 6 cy
1
BBU on Breaker 600 clears the station - 1 unit SPS
@input summer-plot-ps.idv
0
chnf
c102-1N-600_BBU_nrecl-2013XP.out
subt
1
1 phase fault on Onslow B61
1
BBU on bus tie reaker
@input summer-plot-ps.idv
0
c103-120H-622_BBU_nrecl-2013XP.out
subt
```

1
1 phase fault L6016 at 120H, BBU on 120H-622
1
trips L6016 L6005 in 14 cycles
@input summer-plot-ps.idv
0
CHNF
c104-103H-632_BBU_nrecl-2013XP.out
subt
1
1 phase fault L6033 at 103H, cleared 1H in 6 cy
1
103h-632 fails, Bus B61 clears
@input summer-plot-ps.idv
0
chnf
c105-90H-608_BBU_nrecl-2013XP.out
subt
1
1 phase fault L6010 at 90H, 120H end cleared in 6 cy
1
BBU on 90H-608 trips L6005 in 14 cycles
@input summer-plot-ps.idv
0
chnf
c106-90H-611_BBU_nrecl-2013XP.out
subt
1
1 phase fault L6008 at 90H, 103H end cleared in 6 cy
1
BBU on 90H-611 trips L6009 in 14 cycles
@input summer-plot-ps.idv
0
chnf
c107-47C-601_BBU_nrecl-2013XP.out
subt
1
1 phase fault L6518 at 47C, 2C end cleared in 6 cy
1
BBU on 47C-601 trips TMP-1 in 14 cycles
@input summer-plot-ps.idv
0
chnf
c108a-91H-523_BBU_nrecl-2013XP.out
subt
1
1 phase fault on L5041 at 91H opens from 99h in 9 cycle
1
91H-523 breaker fails No BBU installed; all gens on
@input summer-plot-ps.idv
0
chnf
c108b-91H-523_BBU_nrecl-2013XP.out
subt

1
1 phase fault on L5041 at 91H opens from 99h in 9 cycle
1
91H-523 breaker fails No BBU installed; TC 1 off
@input summer-plot-ps.idv
0
chnf
c108c-91H-523_BBU_nrecl-2013XP.out
subt
1
1 phase fault on L5041 at 91H opens from 99h in 9 cycle
1
91H-523 breaker fails No BBU installed; TC1 and 2 off
@input summer-plot-ps.idv
0
chnf
c108d-91H-523_BBU_nrecl-2013XP.out
subt
1
1 phase fault on L5041 at 91H opens from 99h in 9 cycle
1
91H-523 breaker fails No BBU installed; all TC off
@input summer-plot-ps.idv
0
chnf
c109-101h-600_BBU_nrecl-2013XP.out
subt
1
1 phase fault on 101H-B62 101H-600 breaker fails
1
BBU opertes in 15 cycles entire bus no reclosing
@input summer-plot-ps.idv
0
chnf
c110a-108h-609_BBU_nrecl-2013XP.out
subt
1
1 phase fault on L6009 at 108H 108H-609 breaker fails
1
BBU opertes in 15 cycles B2 no reclosing; all BS on
@input summer-plot-ps.idv
0
chnf
c110b-108h-609_BBU_nrecl-2013XP.out
subt
1
1 phase fault on L6009 at 108H 108H-609 breaker fails
1
BBU opertes in 15 cycles B2 no reclosing no BS on
@input summer-plot-ps.idv
0
chnf
e101-103H-600-1p_nrecl-2013XP.out
subt

1
1 phase fault on Bus tie breaker 103H-600 at Lakeside
1
Clears 103H 138kV bus
@input summer-plot-ps.idv
0
chnf
e102-47C-602-1p_nrecl-2013XP.out
subt
1
1 phase fault on breaker 47C-602 at Stora
1
Clears 2 TMP
@input summer-plot-ps.idv
0
chnf
e103a-91H-523-1p_nrecl-2013XP.out
subt
1
1 phase fault on breaker 91H-523 at Tuft's Cove 69kV
1
Clears 5041 and T11 All TC on
@input summer-plot-ps.idv
0
chnf
e103b-91H-523-1p_nrecl-2013XP.out
subt
1
1 phase fault on breaker 91H-523 at Tuft's Cove 69kV
1
Clears 5041 and T11 TC1 off
@input summer-plot-ps.idv
0
chnf
e103c-91H-523-1p_nrecl-2013XP.out
subt
1
1 phase fault on breaker 91H-523 at Tuft's Cove 69kV
1
Clears 5041 and T11 TC1 and 2 off
@input summer-plot-ps.idv
0
chnf
e103d-91H-523-1p_nrecl-2013XP.out
subt
1
1 phase fault on breaker 91H-523 at Tuft's Cove 69kV
1
Clears 5041 and T11 All TC off
@input summer-plot-ps.idv
0
chnf
e104a-104H-600-1p_nrecl-2013XP.out
subt

```
1
1 phase fault on  breaker 104h-600 at burnside 138kv
1
Clears bus; all burnside on
@input summer-plot-ps.idv
0
chnf
e104b-104H-600-1p_nrecl-2013XP.out
subt
1
1 phase fault on  breaker 104h-600 at burnside 138kv
1
Clears bus; all burnside off
@input summer-plot-ps.idv
0
chnf
g101-79N-B61-SPS_delay_nrecl-2013XP.out
subt
1
1 phase fault on Bus B61 at Hopewell
1
Clears bus and transformer, open ends L8003 trip L8004
@input summer-plot-ps.idv
0
stop
@end
```

```
MENU,OFF      /* FORCE MENU TO CORRECT STATUS
PSAS
1

recover data from win13-iatr.snp and 2013XP-cnv.sav
start, output = b01-7012_1ph_88s723-2013XP.out
pss
TEXT ...
TEXT ... CONTINGENCY B01
TEXT ... SLG FAULT ON LINGAN END OF 7012
TEXT ... 88S723 FAILS, CLEARS 7012 AND 7014 IN 15 CYCLES
TEXT ... NO SPS
pdev
2
b01-7012_1ph_88s723-2013XP.pdv
fin
run to 0 seconds, print=0
apply fault on bus 199000, admittance = 235 -2600 mva
run for 4 cycles, print=0
trip line from bus 199000 to bus 199050 ckt 2
run to 11 cycles, print = 0
clear fault
disconnect bus 199040
run to 3 seconds, print=0 plot 7
run to 10 seconds, print=0, plot=15
end
stop
ECHO
@END
```

```
MENU,OFF      /* FORCE MENU TO CORRECT STATUS
PSAS
1

recover data from win13-iatr.snp and 2013XP-cnv.sav
start, output = b01s-7012_1ph_88s723-2013XP.out
pss
TEXT ...
TEXT ... CONTINGENCY B01S
TEXT ... SLG FAULT ON LINGAN END OF 7012
TEXT ... 88S723 FAILS, CLEARS 7012 AND 7014 IN 15 CYCLES
TEXT ... SPS trips Unit 4
TEXT ...
pdev
2
b01s-7012_1ph_88s723-2013XP.pdv
fin
run to 0 seconds, print=0
apply fault on bus 199000, admittance = 235 -2600 mva
run for 4 cycles, print=0
trip line from bus 199000 to bus 199050 ckt 2
run to 11 cycles, print = 0
clear fault
disconnect bus 199040
run for 2 cycles, print=0
disconnect bus 199004
run to 5 seconds, print=0 plot 7
run to 10 seconds, print=0, plot=15
end
stop
ECHO
@END
```

```
MENU,OFF      /* FORCE MENU TO CORRECT STATUS
PSAS
1

recover data from win13-iatr.snp and 2013XP-cnv.sav
pss
TEXT ...
TEXT ... CONTINGENCY B03
TEXT ... SLG FAULT ON HASTINGS END OF 7012
TEXT ... 3C-715 FAILS, CLEARS 7012 AND 7004 IN 17 CYCLES
TEXT ...
TEXT ...
PDEV
2
b03-7012_1ph_3c715-2013XP.pdv
FIN
START, OUTPUT = b03-7012_1ph_3c715-2013XP.out
RUN TO 0 SECONDS, PRINT=0
APPLY FAULT ON BUS 199050, ADMITTANCE = 177 -1382 MVA
RUN FOR 4 CYCLES, PRINT=0
TRIP LINE FROM BUS 199000 TO BUS 199050 CKT 2
RUN FOR 12 CYCLES, PRINT = 0
CLEAR FAULT
TRIP LINE FROM BUS 199050 TO BUS 199590 CKT 2
RUN TO 5 SECONDS, PRINT=0 plot 7
run to 10 seconds, PRINT=0 plot 15
END
stop
ECHO
@END
```

```
MENU,OFF      /* FORCE MENU TO CORRECT STATUS
PSAS
1

recover data from win13-iatr.snp and 2013XP-cnv.sav
pss
TEXT ...
TEXT ... CONTINGENCY B04
TEXT ... SLG FAULT ON ONSLOW END OF 7005
TEXT ... 67N-712 FAILS, CLEARS 7005 AND 7018 IN 16 CYCLES
TEXT ...
TEXT ...
PDEV
2
b04-7005_1ph_67n712-2013XP.pdv
FIN
START, OUTPUT = b04-7005_1ph_67n712-2013XP.out
RUN TO 0 SECONDS, PRINT=0
APPLY FAULT ON BUS 199130, ADMITTANCE = 372 -2350 MVA
RUN FOR 4 CYCLES, PRINT=0
TRIP LINE FROM BUS 199050 TO BUS 199130 CKT 3
RUN FOR 12 CYCLES, PRINT = 0
CLEAR FAULT
TRIP LINE FROM BUS 199130 TO BUS 199200 CKT 3
RUN TO 5 SECONDS, PRINT=0 plot 7
run to 10 seconds, PRINT=0 plot 15
end
stop
ECHO
@END
END
```

```
MENU,OFF      /* FORCE MENU TO CORRECT STATUS
PSAS
1

recover data from win13-iatr.snp and 2013XP-cnv.sav
pss
TEXT ...
TEXT ... CONTINGENCY B04
TEXT ... SLG FAULT ON ONSLOW END OF 7005
TEXT ... 67N-712 FAILS, CLEARS 7005 AND 7018 IN 16 CYCLES
TEXT ...
TEXT ...
PDEV
2
b04s-7005_1ph_67n712-2013XP.pdv
FIN
START, OUTPUT = b04s-7005_1ph_67n712-2013XP.out
RUN TO 0 SECONDS, PRINT=0
APPLY FAULT ON BUS 199130, ADMITTANCE = 372 -2350 MVA
RUN FOR 4 CYCLES, PRINT=0
TRIP LINE FROM BUS 199050 TO BUS 199130 CKT 3
RUN FOR 12 CYCLES, PRINT = 0
CLEAR FAULT
TRIP LINE FROM BUS 199130 TO BUS 199200 CKT 3
run for 2 cycles, print=0
disconnect bus 199003
RUN TO 5 SECONDS, PRINT=0 plot 7
run to 10 seconds, PRINT=0 plot 15
END
stop
ECHO
@END
```

```
MENU,OFF      /* FORCE MENU TO CORRECT STATUS
PSAS
1

recover data from win13-iatr.snp and 2013XP-cnv.sav
pss
TEXT ...
TEXT ... CONTINGENCY B06
TEXT ... SLG FAULT ON ONSLOW END OF 8003
TEXT ... 67N-812 FAILS, CLEARS 8003 AND 8002
TEXT ...
TEXT ...
PDEV
2
b06-8003_1ph_67n812-2013XP.pdv
FIN
START, OUTPUT = b06-8003_1ph_67n812-2013XP.out
RUN TO 0 SECONDS, PRINT=0
APPLY FAULT ON BUS 199125, ADMITTANCE = 340 -2230 MVA
RUN FOR 4 CYCLES, PRINT=0
TRIP LINE FROM BUS 199120 TO BUS 199125
RUN FOR 12 CYCLES, PRINT = 0
CLEAR FAULT
TRIP LINE FROM BUS 199125 TO BUS 199195 CKT 1
RUN TO 5 SECONDS, PRINT=0 plot 7
run to 10 seconds, PRINT=0 plot 15
END
stop
ECHO
@END
```

```
MENU,OFF      /* FORCE MENU TO CORRECT STATUS
PSAS
1

recover data from win13-iatr.snp and 2013XP-cnv.sav
pss
TEXT ...
TEXT ... CONTINGENCY B06
TEXT ... SLG FAULT ON ONSLOW END OF 8003
TEXT ... 67N-812 FAILS, CLEARS 8003 AND 8002
TEXT ...
TEXT ...
PDEV
2
b06s-8003_1ph_67n812-2013XP.pdv
FIN
START, OUTPUT = b06s-8003_1ph_67n812-2013XP.out
RUN TO 0 SECONDS, PRINT=0
APPLY FAULT ON BUS 199125, ADMITTANCE = 340 -2230 MVA
RUN FOR 4 CYCLES, PRINT=0
TRIP LINE FROM BUS 199120 TO BUS 199125
RUN FOR 12 CYCLES, PRINT = 0
CLEAR FAULT
TRIP LINE FROM BUS 199125 TO BUS 199195 CKT 1
run for 3 cycles print=0 plot 7
disconnect bus 199002
RUN TO 5 SECONDS, PRINT=0 plot 7
run to 10 seconds, PRINT=0 plot 15
END
stop
ECHO
@END
```

```
MENU,OFF      /* FORCE MENU TO CORRECT STATUS
PSAS
1

recover data from win13-iatr.snp and 2013XP-cnv.sav
pss
TEXT
TEXT CONTINGENCY B07
TEXT 1 PHASE FAULT ON L8004 AT HOPEWELL
TEXT BREAKER 79N-810 FAILS
TEXT BBU TRIPS 8003 IN 15 CYCLES
TEXT no sps
TEXT
pdev
2
b07-pg_8004_79n_bbu-2013XP.pdv
FIN
start, output = b07-pg_8004_79n_bbu-2013XP.out
run to 0 seconds print=0
apply fault bus 199120, admittance= 1998 -1547 mva
run for 4 cycles print=0
trip line from bus 199045 to bus 199120, ckt 1
run for 12 cycles, print=0
CLEAR FAULT BUS 199120
trip line from bus 199125 to bus 199120, ckt 1
run to 5 seconds, print=0, plot=9
run to 10 seconds, print=0, plot=15
end
stop
ECHO
@END
```

```
MENU,OFF      /* FORCE MENU TO CORRECT STATUS
PSAS
1

recover data from win13-iatr.snp and 2013XP-cnv.sav
start, output = b07s-pg_8004_79n_bbu-2013XP.out
pss
TEXT
TEXT CONTINGENCY B07S
TEXT 1 PHASE FAULT ON L8004 AT HOPEWELL
TEXT BREAKER 79N-810 FAILS
TEXT BBU TRIPS 8003 IN 15 CYCLES
TEXT SPS DROPS LINGAN UNIT 2
TEXT
pdev
2
b07s-pg_8004_79n_bbu-2013XP.pdv
FIN
run to 0 seconds, print=0
apply fault bus 199120, admittance= 1998 -1547 mva
run for 4 cycles print=0
trip line from bus 199045 to bus 199120, ckt 1
run for 11 cycles, print=0
CLEAR FAULT BUS 199120
trip line from bus 199125 to bus 199120, ckt 1
disconnect BUS 199002
run to 5 seconds, print=0, plot=9
run to 10 seconds, print=0, plot=15
end
stop
ECHO
@END
```

```
MENU,OFF      /* FORCE MENU TO CORRECT STATUS
PSAS
1

recover data from win13-iatr.snp and 2013XP-cnv.sav
start, output = b07ss-pg_8004_79n_bbu-2013XP.out
pss
TEXT
TEXT CONTINGENCY B07Ss
TEXT 1 PHASE FAULT ON L8004 AT HOPEWELL
TEXT BREAKER 79N-810 FAILS
TEXT BBU TRIPS 8003 IN 15 CYCLES
TEXT SPS DROPS LINGAN UNIT 2 and 3
TEXT
pdev
2
b07ss-pg_8004_79n_bbu-2013XP.pdv
FIN
run to 0 seconds, print=0
apply fault bus 199120, admittance= 1998 -1547 mva
run for 4 cycles print=0
trip line from bus 199045 to bus 199120, ckt 1
run for 11 cycles, print=0
CLEAR FAULT BUS 199120
trip line from bus 199125 to bus 199120, ckt 1
disconnect BUS 199002
disconnect BUS 199003
run to 5 seconds, print=0, plot=9
run to 10 seconds, print=0, plot=15
end
stop
ECHO
@END
```

```
MENU,OFF      /* FORCE MENU TO CORRECT STATUS
PSAS
1

recover data from win13-iatr.snp and 2013XP-cnv.sav
pss
TEXT ...
TEXT ... CONTINGENCY B08
TEXT ... SLG FAULT ON LINGAN bus node between G3 and G4
TEXT ... 88S721 FAILS, CLEARS G3 and G4 IN 15 CYCLES
TEXT ... NO SPS
pdev
2
b08-88s_b71_1ph_88s721-2013XP.pdv
fin
start, output = b08-88s_b71_1ph_88s721-2013XP.out
run to 0 seconds, print=0
apply fault on bus 199000, admittance = 235 -2600 mva
run for 4 cycles, print=0
run for 11 cycles, print = 0
clear fault
disconnect bus 199003
disconnect bus 199004
run to 5 seconds, print=0 plot 7
run to 10 seconds, print=0 plot 15
end
stop
ECHO
@END
```

```
MENU,OFF      /* FORCE MENU TO CORRECT STATUS
PSAS
1

recover data from win13-iatr.snp and 2013XP-cnv.sav
pss
TEXT
TEXT CONTINGENCY B09
TEXT 1 PHASE FAULT ON L8001 AT onslow
TEXT BREAKER 67N-815 FAILS
TEXT BBU TRIPS 67N-T82 IN 15 CYCLES
TEXT no sps action
TEXT
pdev
2
b09-pg_8001_67n_815_bbu-2013XP.pdv
FIN
start, output = b09-pg_8001_67n_815_bbu-2013XP.out
run to 0 seconds, print=0
apply fault bus 199125, admittance= 350 -2200 mva
run for 4 cycles print=0
disconnect bus 190381
run to 15 cycles, print=0
CLEAR FAULT BUS 199125
trip branch from bus 199125 to bus 199130, ckt 2
run to 5 seconds, print=0, plot=9
run to 10 seconds, print=0, plot=15
end
stop
ECHO
@END
```

```
MENU,OFF      /* FORCE MENU TO CORRECT STATUS
PSAS
1

recover data from win13-iatr.snp and 2013XP-cnv.sav
start, output = b09s-pg_8001_67n_815_bbu-2013XP.out
pss
TEXT
TEXT CONTINGENCY B09s
TEXT 1 PHASE FAULT ON L8001 AT onslow
TEXT BREAKER 67N-815 FAILS
TEXT BBU TRIPS 67N-T82 IN 15 CYCLES
TEXT export -trip 1 unit
TEXT
pdev
2
b09s-pg_8001_67n_815_bbu-2013XP.pdv
FIN
run to 0 seconds, print=0
apply fault bus 199125, admittance= 350 -2200 mva
run for 4 cycles print=0
disconnect bus 190381
run to 15 cycles, print=0
CLEAR FAULT BUS 199125
trip branch from bus 199125 to bus 199130, ckt 2
run to 18 cycles print=0
disconnect bus 199004
run to 5 seconds, print=0, plot=9
run to 10 seconds, print=0, plot=15
end
stop
ECHO
@END
```

```
MENU,OFF      /* FORCE MENU TO CORRECT STATUS
PSAS
1

recover data from win13-iatr.snp and 2013XP-cnv.sav
start, output = b101-L6005+L6010_DCT_nrecl-2013XP.out
pss
text ...
text ... CONTINGENCY B101
text ... 1 phase fault L6005/L6010 at 120H, cleared in
text ... 6 cycles, no reclosing
text ... No SPS
text ...
pdev
2
b101-L6005+L6010_DCT_nrecl-2013XP.pdv
fin
run to 0 seconds, print=0
apply fault on bus 199201 admittance  1134.10  -9520.53 MVA
run to 6 cycles, print=0
clear fault
trip line from bus 199201 to bus 199184
disconnect bus 199203
run to 5 seconds, print=0, plot=9
run to 10 seconds, print=0, plot=15
hold results in temp.snp and b101-L6005+L6010_DCT_nrecl-2013XP.sav
end
stop
ECHO
@END
```

```
MENU,OFF      /* FORCE MENU TO CORRECT STATUS
PSAS
1

recover data from win13-iatr.snp and 2013XP-cnv.sav
pss
text ...
text ... CONTINGENCY B102
text ... 1 phase fault DCT L6010/L6011 at 120H, cleared in
text ... 6 cycles, no reclosing
text ... No SPS
text ...
pdev
2
b102-L6011+L6010_DCT_nrecl-2013XP.pdv
fin
start, output = b102-L6011+L6010_DCT_nrecl-2013XP.out
run to 0 seconds, print=0
apply fault on bus 199201 admittance  1134.10  -9520.53 MVA
run to 6 cycles, print=0
clear fault
trip line from bus 199201 to bus 199302 ckt 2
disconnect bus 199203
run to 5 seconds, print=0, plot=9
run to 10 seconds, print=0, plot=15
hold results in temp.snp and b102-L6011+L6010_DCT_nrecl-2013XP.sav
end
stop
ECHO
@END
```

```
MENU,OFF      /* FORCE MENU TO CORRECT STATUS
PSAS
1

recover data from win13-iatr.snp and 2013XP-cnv.sav
pss
text ...
text ... CONTINGENCY B103
text ... 1 phase fault L6005/L6016 at 120H, cleared in
text ... 6 cycles, no reclosing
text ... No SPS
text ...
pdev
2
b103-L6005+L6016_DCT_nrecl-2013XP.pdv
fin
start, output = b103-L6005+L6016_DCT_nrecl-2013XP.out
run to 0 seconds, print=0
apply fault on bus 199201 admittance  1134.10  -9520.53 MVA
run to 6 cycles, print=0
clear fault
disconnect bus 199208
disconnect bus 199203
run to 5 seconds, print=0, plot=9
run to 10 seconds, print=0, plot=15
hold results in temp.snp and b103-L6005+L6016_DCT_nrecl-2013XP.sav
end
stop
ECHO
@END
```

```
MENU,OFF      /* FORCE MENU TO CORRECT STATUS
PSAS
1

recover data from win13-iatr.snp and 2013XP-cnv.sav
pss
text ...
text ... CONTINGENCY B104
text ... 1 phase fault L6003/L6009 at 90H, cleared in
text ... 6 cycles, no reclosing
text ... No SPS
text ...
pdev
2
b104-L6003+L6009_DCT_nrecl-2013XP.pdv
fin
start, output = b104-L6003+L6009_DCT_nrecl-2013XP.out
run to 0 seconds, print=0
apply fault on bus 199184 admittance 1377.93  -6360.81 MVA
run to 6 cycles, print=0
clear fault
disconnect bus 199185
trip line from bus 199184 to bus 199165 ckt 1
run to 5 seconds, print=0, plot=9
run to 10 seconds, print=0, plot=15
hold results in temp.snp and b104-L6003+L6009_DCT_nrecl-2013XP.sav
end
stop
ECHO
@END
```

```
MENU,OFF      /* FORCE MENU TO CORRECT STATUS
PSAS
1

recover data from win13-iatr.snp and 2013XP-cnv.sav
pss
text ...
text ... CONTINGENCY B105a
text ... 1 phase fault L6003/L6007 at 91H, cleared in
text ... 6 cycles, no reclosing  - fault impedance with all generation on
text ... No SPS
text ...
pdev
2
b105a-L6003+L6007_DCT_nrecl-2013XP.pdv
fin
start, output = b105a-L6003+L6007_DCT_nrecl-2013XP.out
run to 0 seconds, print=0
apply fault on bus 199165 admittance  1154.81  -9418.32 MVA
run to 6 cycles, print=0
clear fault
trip line from bus 199165 to bus 199187 ckt 1
trip line from bus 199165 to bus 199184 ckt 1
run to 5 seconds, print=0, plot=9
run to 10 seconds, print=0, plot=15
hold results in temp.snp and b105a-L6003+L6007_DCT_nrecl-2013XP.sav
end
stop
ECHO
@END
```

```
MENU,OFF      /* FORCE MENU TO CORRECT STATUS
PSAS
1

recover data from win13-iatr.snp and 2013XP-cnv.sav
pss
text ...
text ... CONTINGENCY B105b
text ... 1 phase fault L6003/L6007 at 91H, cleared in
text ... 6 cycles, no reclosing  - fault impedance with bs generation off
text ... No SPS
text ...
pdev
2
b105b-L6003+L6007_DCT_nrecl-2013XP.pdv
fin
start, output = b105b-L6003+L6007_DCT_nrecl-2013XP.out
run to 0 seconds, print=0
apply fault on bus 199165 admittance 1078.87  -8032.38 MVA
run to 6 cycles, print=0
clear fault
trip line from bus 199165 to bus 199187 ckt 1
trip line from bus 199165 to bus 199184 ckt 1
run to 5 seconds, print=0, plot=9
run to 10 seconds, print=0, plot=15
hold results in temp.snp and b105b-L6003+L6007_DCT_nrecl-2013XP.sav
end
stop
ECHO
@END
```

```
MENU,OFF      /* FORCE MENU TO CORRECT STATUS
PSAS
1

recover data from win13-iatr.snp and 2013XP-cnv.sav
pss
text ...
text ... CONTINGENCY B105c
text ... 1 phase fault L6003/L6007 at 91H, cleared in
text ... 6 cycles, no reclosing  - fault impedance with bs  and TC 12 generation off
text ... No SPS
text ...
pdev
2
b105c-L6003+L6007_DCT_nrecl-2013XP.pdv
fin
start, output = b105c-L6003+L6007_DCT_nrecl-2013XP.out
run to 0 seconds, print=0
apply fault on bus 199165 admittance  1163.05  -6794.41 MVA
run to 6 cycles, print=0
clear fault
trip line from bus 199165 to bus 199187 ckt 1
trip line from bus 199165 to bus 199184 ckt 1
run to 5 seconds, print=0, plot=9
run to 10 seconds, print=0, plot=15
hold results in temp.snp and b105c-L6003+L6007_DCT_nrecl-2013XP.sav
end
stop
ECHO
@END
```

```
MENU,OFF      /* FORCE MENU TO CORRECT STATUS
PSAS
1

recover data from win13-iatr.snp and 2013XP-cnv.sav
start, output = b106-L7008+L7009_DCT_nrecl-2013XP.out
pss
text ...
text ... CONTINGENCY B106
text ... 1 phase fault DCT L7008/L7009 at 120H, cleared in
text ... 4 cycles, no reclosing  - west separates at 1 sec
text ... No SPS
text ...
pdev
2
b106-L7008+L7009_DCT_nrecl-2013XP.pdv
fin
run to 0 seconds, print=0
apply fault on bus 199200 admittance  975 -7964 MVA
run for 4 cycles, print=0
clear fault
disconnect bus 199241
disconnect bus 199240
run for .2 second, print=0
disconnect bus 199367
disconnect bus 199292
disconnect bus 199247
disconnect bus 199248
disconnect bus 199250
disconnect bus 199253
disconnect bus 199255
disconnect bus 199256
disconnect bus 199262
disconnect bus 199273
disconnect bus 199278
disconnect bus 199279
disconnect bus 199285
disconnect bus 199289
disconnect bus 199368
disconnect bus 199401
run to 5 seconds, print=0, plot=9
run to 10 seconds, print=0, plot=15
hold results in temp.snp and b106-L7008+L7009_DCT_nrecl-2013XP.sav
end
stop
ECHO
@END
```

```
MENU,OFF      /* FORCE MENU TO CORRECT STATUS
PSAS
1

recover data from win13-iatr.snp and 2013XP-cnv.sav
start, output = c01-pg_7003_7004_50n-2013XP.out
end

text ...
TEXT ... CONTINGENCY C01
text ... slg flt on separate phases of double ckt tower
text ... 7003 and 7004 near Trenton cleared in 5 cycles
text ... no sps
TEXT
pdev
2
c01-pg_7003_7004_50n-2013XP.pdv
lofl
ltap
199130 199050 1
199990
fault 1
.37
199590 199050 2
199991
fault 2
.37
0
fact
tysl
rtrn
TEXT, run to 0 seconds, print=0 plot=5
RUN
  0.000       0    5    0
altr
0
1
0
1
199990
1
,2.8,-725
0
-1
199991
1
,-36,-769
0
-1
-1
TEXT, run for 4 cycles print=0
RUN
 0.6667E-01    0    5    0
```

```
lofl
dscn
199990
199991
0
fact
tysl
rtrn
TEXT, run for 2 seconds, print=0 plot=9
RUN
  2.067       0    9    0
lofl
recn
199990
199991
0
chng
3
199990 199050 1
1
0
0
0
199991 199050 2
1
0
0
0
-1
fact
tysl
rtrn


TEXT, run for 4 cycles
RUN
  2.133      0    5    0
lofl
dscn
199990
199991
0
fact
tysl
rtrn
TEXT, run to 5 seconds, print=0, plot=9
RUN
5.000       0    9    0
TEXT, run to 10 seconds, print=0, plot=15
RUN
 15.00       0   15    0
TEXT ***
TEXT ***
TEXT *** THIS RUN WAS GENERATED FROM RESPONSE FILE PSAS006.IDV
```

```
TEXT *** MANUALLY DELETE FILE WHEN DESIRED
TEXT ***
TEXT ***
stop
@END
```

```
MENU,OFF      /* FORCE MENU TO CORRECT STATUS
PSAS
1

recover data from win13-iatr.snp and 2013XP-cnv.sav
start, output = c01s-pg_7003_7004_50n-2013XP.out
end

text ...
TEXT ... CONTINGENCY C01s
text ... slg flt on separate phases of double ckt tower
text ... 7003 and 7004 near Trenton cleared in 5 cycles
text ... sps trips Lingan unit 2 at 0.3 sec
TEXT
pdev
2
c01s-pg_7003_7004_50n-2013XP.pdv
lofl
ltap
199130 199050 1
199990
fault 1
.37
199590 199050 2
199991
fault 2
.37
0
fact
tysl
rtrn
TEXT, run to 0 seconds, print=0 plot=5
RUN
   0.000       0    5    0
altr
0
1
0
1
199990
1
,2.8,-725
0
-1
199991
1
,-36,-769
0
-1
-1
TEXT, run for 4 cycles print=0
RUN
  0.6667E-01    0    5    0
```

```
lofl
dscn
199990
199991
0
fact
tysl
rtrn
TEXT, run for 2 seconds, print=0 plot=9
RUN
  2.067       0    9    0
lofl
recn
199990
199991
0
chng
3
199990 199050 1
1
0
0
0
199991 199050 2
1
0
0
0
-1
fact
tysl
rtrn


TEXT, run for 4 cycles
RUN
  2.133       0    5    0
lofl
dscn
199990
199991
0
fact
tysl
rtrn
run
0.3 0 9 0
lofl
dscn
199002
0
fact
tysl
rtrn
```

```
TEXT, run to 5 seconds, print=0, plot=9
RUN
5.000       0    9    0
TEXT, run to 10 seconds, print=0, plot=15
RUN
  15.00       0   15    0
TEXT ***
TEXT ***
TEXT *** THIS RUN WAS GENERATED FROM RESPONSE FILE PSAS006.IDV
TEXT *** MANUALLY DELETE FILE WHEN DESIRED
TEXT ***
TEXT ***
stop
@END
```

```
MENU,OFF      /* FORCE MENU TO CORRECT STATUS
PSAS
1

recover data from win13-iatr.snp and 2013XP-cnv.sav
start, output = c02-pg_6534_7011_2s-2013XP.out
pss
text ...
TEXT ... CONTINGENCY C02
text ... slg flt on separate phases of double ckt tower
text ... 6534 and 7011 near VJ cleared in 4 cycles
text ...
TEXT
pdev
2
c02-pg_6534_7011_2s-2013XP.pdv
fin
run to 0 seconds, print=0 plot=5
apply fault bus 199000, admittance= 498 -3600 mva
apply fault bus 199005, admittance= 315 -1803 mva
run for 4 cycles print=0
CLEAR FAULT BUS 199000
CLEAR FAULT BUS 199005
trip line from bus 199000 to bus 199050  ckt 1
trip line from bus 199005 to bus 199007 ckt 1
run to 5 seconds, print=0, plot=9
run to 10 seconds, print=0, plot=15
end
stop
ECHO
@END
```

```
MENU,OFF      /* FORCE MENU TO CORRECT STATUS
PSAS
1

recover data from win13-iatr.snp and 2013XP-cnv.sav
start, output = c03-pg_8004_7005_strait-2013XP.out
end

text ...
TEXT ... CONTINGENCY C03
text ... slg flt on separate phases of double ckt tower
text ... 8004 and 7005 Canso crossing cleared in 4 cycles
text ...
TEXT
pdev
2
c03-pg_8004_7005-2013XP.pdv
lofl
text add dummy bus at strait
ltap
199045 199120 1
199990
dummy
.5
0
fact
tysl
rtrn
TEXT, run to 0 seconds, print=0 plot=5
RUN
  0.000       0    5    0
TEXT, apply fault bus 199050, admittance= 290 -1600 mva
ALTR
0
1
0
1
199050                                  /* HASTINGS230.00
1
,      290.00         -1600.
Q
TEXT, apply fault bus 199990, admittance= 85 -1000 mva
ALTR
0
1
0
1
199990                                  /* dummy345.00
1
,      84.00         -1000.
Q
0
TEXT, run for 4 cycles print=0
```

```
RUN
  0.6667E-01    0    5    0
TEXT, CLEAR FAULT BUS 199050
ALTR
0
1
0
1
199050                                  /* HASTINGS230.00
1
,      0.000          0.000
Q
0
TEXT, CLEAR FAULT BUS 199990
ALTR
0
1
0
1
199990                                  /* dummy345.00
1
,      0.000          0.000
Q
0
TEXT, trip line from bus 199050 to bus 199130
ALTR
0
1
0
3
199050         199130         3                  /* HASTINGS230.00 - ONSLOW  230.00
1
0
Q
0
TEXT, run for .7 seconds, print=0 plot=9
RUN
   0.767       0    9    0
TEXT, apply fault bus 199990, admittance= 160 -880 mva
ALTR
0
1
0
1
199990                                  /* dummy345.00
1
,     160.00         -880.
Q
0
TEXT, run for 4 cycles, print=0 plot=9
RUN
   0.8333       0    9    0
TEXT, clear fault on bus 199990
ALTR
```

```
0
1
0
1
199990                                  /* dummy345.00
1
,     0         0.
Q
0
TEXT, disconnect bus 199990
LOFL
DSCN
199990                                  /* dummy
0
0 / EXTRA RESPONSE IN CASE TYPE 4
FACT
RTRN
TEXT, run to 5 seconds, print=0, plot=9
RUN
  5.000       0    9    0
TEXT, run to 10 seconds, print=0, plot=15
RUN
  15.000       0    15    0
TEXT ***
TEXT ***
TEXT *** THIS RUN WAS GENERATED FROM RESPONSE FILE c03.idv
TEXT *** MANUALLY DELETE FILE WHEN DESIRED
TEXT ***
TEXT ***
stop
ECHO
@END
```

```
MENU,OFF      /* FORCE MENU TO CORRECT STATUS
PSAS
1

recover data from win13-iatr.snp and 2013XP-cnv.sav
start, output = c03s-pg_8004_7005_strait-2013XP.out
end
text ...
TEXT ... CONTINGENCY C03s
text ... slg flt on separate phases of double ckt tower
text ... 8004 and 7005 Canso crossing cleared in 4 cycles
text ... SPS dumps 1 unit at lingan 4
TEXT
pdev
2
c03s-pg_8004_7005-2013XP.pdv
lofl
text add dummy bus at strait
ltap
199045 199120 1
199990
dummy
.5
0
fact
tysl
rtrn
TEXT, run to 0 seconds, print=0 plot=5
RUN
  0.000       0    5    0
TEXT, apply fault bus 199050, admittance= 290 -1600 mva
ALTR
0
1
0
1
199050                                  /* HASTINGS230.00
1
,      290.00         -1600.
Q
TEXT, apply fault bus 199990, admittance= 85 -1000 mva
ALTR
0
1
0
1
199990                                  /* dummy345.00
1
,      84.00         -1000.
Q
0
TEXT, run for 4 cycles print=0
RUN
```

```
  0.6667E-01    0    5    0
TEXT, CLEAR FAULT BUS 199050
ALTR
0
1
0
1
199050                                  /* HASTINGS230.00
1
,      0.000          0.000
Q
0
TEXT, CLEAR FAULT BUS 199990
ALTR
0
1
0
1
199990                                  /* dummy345.00
1
,      0.000          0.000
Q
0
TEXT, trip line from bus 199050 to bus 199130
ALTR
0
1
0
3
199050         199130         3                  /* HASTINGS230.00 - ONSLOW  230.00
1
0
Q
0
TEXT, run for .7 seconds, print=0 plot=9
RUN
   0.767       0    9    0
TEXT, apply fault bus 199990, admittance= 160 -880 mva
ALTR
0
1
0
1
199990                                  /* dummy345.00
1
,     160.00          -880.
Q
0
TEXT, run for 4 cycles, print=0 plot=9
RUN
   0.8333       0    9    0
TEXT, clear fault on bus 199990
ALTR
0
```

```
1
0
1
199990                                  /* dummy345.00
1
,     0         0.
Q
0
TEXT, disconnect bus 199000 and 199004
LOFL
DSCN
199990                                  /* dummy
199004
0
0 / EXTRA RESPONSE IN CASE TYPE 4
FACT
RTRN
TEXT, run to 5 seconds, print=0, plot=9
RUN
  5.000       0    9    0
TEXT, run to 10 seconds, print=0, plot=15
RUN
  15.00       0   15    0
TEXT ***
TEXT ***
TEXT *** THIS RUN WAS GENERATED FROM RESPONSE FILE c03.idv
TEXT *** MANUALLY DELETE FILE WHEN DESIRED
TEXT ***
TEXT ***
stop
```

```
MENU,OFF      /* FORCE MENU TO CORRECT STATUS
PSAS
1

recover data from win13-iatr.snp and 2013XP-cnv.sav
start, output = c03ss-pg_8004_7005_strait-2013XP.out
end
text ...
TEXT ... CONTINGENCY C03ss
text ... slg flt on separate phases of double ckt tower
text ... 8004 and 7005 Canso crossing cleared in 4 cycles
text ... SPS dumps 2 unit at lingan
TEXT
pdev
2
c03ss-pg_8004_7005-2013XP.pdv
lofl
text add dummy bus at strait
ltap
199045 199120 1
199990
dummy
.5
0
fact
tysl
rtrn
TEXT, run to 0 seconds, print=0 plot=5
RUN
  0.000       0    5    0
TEXT, apply fault bus 199050, admittance= 290 -1600 mva
ALTR
0
1
0
1
199050                                  /* HASTINGS230.00
1
,      290.00         -1600.
Q
TEXT, apply fault bus 199990, admittance= 85 -1000 mva
ALTR
0
1
0
1
199990                                  /* dummy345.00
1
,      84.00         -1000.
Q
0
TEXT, run for 4 cycles print=0
RUN
```

```
  0.6667E-01    0    5    0
TEXT, CLEAR FAULT BUS 199050
ALTR
0
1
0
1
199050                                  /* HASTINGS230.00
1
,      0.000          0.000
Q
0
TEXT, CLEAR FAULT BUS 199990
ALTR
0
1
0
1
199990                                  /* dummy345.00
1
,      0.000          0.000
Q
0
TEXT, trip line from bus 199050 to bus 199130
ALTR
0
1
0
3
199050         199130         3                  /* HASTINGS230.00 - ONSLOW  230.00
1
0
Q
0
TEXT, run for .7 seconds, print=0 plot=9
RUN
   0.767       0    9    0
TEXT, apply fault bus 199990, admittance= 160 -880 mva
ALTR
0
1
0
1
199990                                  /* dummy345.00
1
,     160.00          -880.
Q
0
TEXT, run for 4 cycles, print=0 plot=9
RUN
   0.8333       0    9    0
TEXT, clear fault on bus 199990
ALTR
0
```

```
1
0
1
199990                                  /* dummy345.00
1
,     0         0.
Q
0
TEXT, disconnect bus 199000 and 199004
LOFL
DSCN
199990                                  /* dummy
199004
199002
0
0 / EXTRA RESPONSE IN CASE TYPE 4
FACT
RTRN
TEXT, run to 5 seconds, print=0, plot=9
RUN
  5.000       0    9    0
TEXT, run to 10 seconds, print=0, plot=15
RUN
  10.00       0   15    0
TEXT ***
TEXT ***
TEXT *** THIS RUN WAS GENERATED FROM RESPONSE FILE c03.idv
TEXT *** MANUALLY DELETE FILE WHEN DESIRED
TEXT ***
TEXT ***
stop
```

```
MENU,OFF      /* FORCE MENU TO CORRECT STATUS
PSAS
1

recover data from win13-iatr.snp and 2013XP-cnv.sav
start, output = c101-79N-606_BBU_nrecl-2013XP.out
pss
text ...
text ... CONTINGENCY C101
text ... 1 phase fault on L6507 at Hopewell 79N-606 fails, cleared in
text ... 4 cycles from Trenton, 15 cycles from Hopewell, clears Hopewell 138kV bus, trips L8004, open-ends L8003,
no reclosing
text ... No SPS
text ...
pdev
2
c101-79N-606_BBU_nrec-2013XP.pdv
fin
run to 0 seconds, print=0
apply fault on bus 199121 admittance 142.35  -1279.55 MVA
run to 4 cycles, print=0
trip line from bus 199121 to bus 199090 ckt 1
clear fault
apply fault on bus 199121 admittance 98.26  -1165.54 MVA
run to 15 cycles, print=0
trip line from bus 199121 to bus 199090 ckt 2
trip line from bus 199121 to bus 199120 ckt 1
trip line from bus 199120 to bus 199045 ckt 1
clear fault
run to 5 seconds, print=0, plot=9
run to 10 seconds, print=0, plot=15
hold results in temp.snp and c101-79N-606_BBU_nrec-2013XP.sav
end
stop
ECHO
@END
```

```
MENU,OFF      /* FORCE MENU TO CORRECT STATUS
PSAS
1

recover data from win13-iatr.snp and 2013XP-cnv.sav
start, output = c101s-79N-606_BBU_nrecl-2013XP.out
pss
text ...
text ... CONTINGENCY C101s
text ... 1 phase fault on L6507 at Hopewell 79N-606 fails, cleared in
text ... 4 cycles from Trenton, 15 cycles from Hopewell, clears Hopewell 138kV bus, trips L8004, open-ends L8003,
no reclosing
text ... group 5 trips 1 lingan unit
text ...
pdev
2
c101s-79N-606_BBU_nrec-2013XP.pdv
fin
run to 0 seconds, print=0
apply fault on bus 199121 admittance 142.35  -1279.55 MVA
run to 4 cycles, print=0
trip line from bus 199121 to bus 199090 ckt 1
clear fault
apply fault on bus 199121 admittance 98.26  -1165.54 MVA
run to 15 cycles, print=0
trip line from bus 199121 to bus 199090 ckt 2
trip line from bus 199121 to bus 199120 ckt 1
trip line from bus 199120 to bus 199045 ckt 1
clear fault
run to 17 cycles, print 0
disconnect bus 199003
run to 5 seconds, print=0, plot=9
run to 10 seconds, print=0, plot=15
hold results in temp.snp and c101s-79N-606_BBU_nrec-2013XP.sav
end
stop
ECHO
@END
```

```
MENU,OFF      /* FORCE MENU TO CORRECT STATUS
PSAS
1

recover data from win13-iatr.snp and 2013XP-cnv.sav
start, output = c101s-79N-606_BBU_nrecl-2013XPa.out
pss
text ...
text ... CONTINGENCY C101s
text ... 1 phase fault on L6507 at Hopewell 79N-606 fails, cleared in
text ... 4 cycles from Trenton, 15 cycles from Hopewell, clears Hopewell 138kV bus, trips L8004, open-ends L8003,
no reclosing
text ... group 5 trips 1 lingan unit
text ...
pdev
2
c101s-79N-606_BBU_nrec-2013XPa.pdv
fin
run to 0 seconds, print=0
apply fault on bus 199121 admittance 142.35  -1279.55 MVA
run to 4 cycles, print=0
trip line from bus 199121 to bus 199090 ckt 1
clear fault
apply fault on bus 199121 admittance 98.26  -1165.54 MVA
run to 15 cycles, print=0
trip line from bus 199121 to bus 199090 ckt 2
trip line from bus 199121 to bus 199120 ckt 1
trip line from bus 199120 to bus 199045 ckt 1
clear fault
run to 20 cycles, print 0
disconnect bus 199003
run to 5 seconds, print=0, plot=9
run to 10 seconds, print=0, plot=15
hold results in temp.snp and c101s-79N-606_BBU_nrec-2013XP.sav
end
stop
ECHO
@END
```

```
MENU,OFF      /* FORCE MENU TO CORRECT STATUS
PSAS
1

recover data from win13-iatr.snp and 2013XP-cnv.sav
start, output = c102-1N-600_BBU_nrecl-2013XP.out
pss
text ...
text ... CONTINGENCY C102
text ... 1 phase fault on 1N-B61, trips 67N-T71, 1N-T4, L6001 in 6 cycles
text ... 1N-600 breaker fails
text ... BBU opertes in 15 cycles entire bus no reclosing
text ... No SPS
text ...
pdev
2
c102-1N-600_BBU_nrecl-2013XP.pdv
fin
run to 0 seconds, print=0
apply fault on bus 199110 admittance 105.09  -1254.13 MVA
run to 6 cycles, print=0
trip line from bus 199110 to bus 199130 ckt 1
trip line from bus 199110 to bus 199112 ckt 1
trip line from bus 199110 to bus 199154 ckt 1
clear fault
apply fault on bus 199110 admittance 51.69   -407.60 MVA
run to 15 cycles, print=0
clear fault
disconnect bus 199110
run to 5 seconds, print=0, plot=9
run to 10 seconds, print=0, plot=15
hold results in temp.snp and c102-1N-600_BBU_nrecl-2013XP.sav
end
stop
ECHO
@END
```

```
MENU,OFF      /* FORCE MENU TO CORRECT STATUS
PSAS
1

recover data from win13-iatr.snp and 2013XP-cnv.sav
start, output = c103-120H-622_BBU_nrecl-2013XP.out
pss
text ...
text ... CONTINGENCY C103
text ... 1 phase fault on L6016 at 120H opens from lakeside in 6 cycles
text ... 120H-622 breaker fails
text ... BBU opertes in 15 cycles trips 6005 no reclose
text ... No SPS
text ...
pdev
2
c103-120H-622_BBU_nrecl-2013XP.pdv
fin
run to 0 seconds, print=0
apply fault on bus 199201 admittance 320.68  -2167.37 MVA
run to 6 cycles, print=0
disconnect bus 199203
clear fault
apply fault on bus 199201 admittance 290.22  -2059.22 MVA
run to 14 cycles, print=0
clear fault
disconnect bus 199208
run to 5 seconds, print=0, plot=9
run to 10 seconds, print=0, plot=15
hold results in temp.snp and c103-120H-622_BBU_nrecl-2013XP.sav
end
stop
ECHO
@END
```

```
MENU,OFF      /* FORCE MENU TO CORRECT STATUS
PSAS
1

recover data from win13-iatr.snp and 2013XP-cnv.sav
start, output = c104-103H-632_BBU_nrecl-2013XP.out
pss
text ...
text ... CONTINGENCY C104
text ... 1 phase fault on L6033 at 103H opens from Water Ste in 6 cycles
text ... 103H-632 breaker fails
text ... BBU opertes in 15 cycles trips B61
text ... No SPS
text ...
pdev
2
c104-103H-632_BBU_nrecl-2013XP.pdv
fin
run to 0 seconds, print=0
apply fault on bus 199190 admittance 246.42  -1458.01 MVA
run to 6 cycles, print=0
disconnect bus 199197
clear fault
apply fault on bus 199190 admittance  184.71  -1160.32 MVA
run to 14 cycles, print=0
clear fault
disconnect bus 199205
trip branch from bus 199190 to bus 199195 ckt 1
run to 5 seconds, print=0, plot=9
run to 10 seconds, print=0, plot=15
hold results in temp.snp and c104-103H-632_BBU_nrecl-2013XP.sav
end
stop
ECHO
@END
```

```
MENU,OFF      /* FORCE MENU TO CORRECT STATUS
PSAS
1

recover data from win13-iatr.snp and 2013XP-cnv.sav
start, output = c105-90H-608_BBU_nrecl-2013XP.out
pss
text ...
text ... CONTINGENCY C105
text ... 1 phase fault on L6005 at 90H opens from Brushy in 6 cycles
text ... 90H-608 breaker fails
text ... BBU opertes in 15 cycles trips L6010
text ... No SPS
text ...
pdev
2
c105-90H-608_BBU_nrecl-2013XP.pdv
fin
run to 0 seconds, print=0
apply fault on bus 199184 admittance 344.98  -1581.76 MVA
run to 6 cycles, print=0
trip line from bus 199201 to bus 199184 ckt 1
clear fault
apply fault on bus 199190 admittance  316.04  -1487.37 MVA
run to 14 cycles, print=0
clear fault
disconnect bus 199203
run to 5 seconds, print=0, plot=9
run to 10 seconds, print=0, plot=15
hold results in temp.snp and c105-90H-608_BBU_nrecl-2013XP.sav
end
stop
ECHO
@END
```

```
MENU,OFF      /* FORCE MENU TO CORRECT STATUS
PSAS
1

recover data from win13-iatr.snp and 2013XP-cnv.sav
start, output = c106-90H-611_BBU_nrecl-2013XP.out
pss
text ...
text ... CONTINGENCY C106
text ... 1 phase fault on L6008 at 90H opens from Lakeside in 6 cycles
text ... 90H-611 breaker fails
text ... BBU opertes in 15 cycles trips L6009
text ... No SPS
text ...
pdev
2
c106-90H-611_BBU_nrecl-2013XP.pdv
fin
run to 0 seconds, print=0
apply fault on bus 199184 admittance 344.98  -1581.76 MVA
run to 6 cycles, print=0
trip line from bus 199190 to bus 199184 ckt 1
clear fault
apply fault on bus 199190 admittance  300.19  -1440.33 MVA
run to 14 cycles, print=0
clear fault
disconnect bus 199185
run to 5 seconds, print=0, plot=9
run to 10 seconds, print=0, plot=15
hold results in temp.snp and c106-90H-611_BBU_nrecl-2013XP.sav
end
stop
ECHO
@END
```

```
MENU,OFF      /* FORCE MENU TO CORRECT STATUS
PSAS
1

recover data from win13-iatr.snp and 2013XP-cnv.sav
start, output = c107-47C-601_BBU_nrecl-2013XP.out
pss
text ...
text ... CONTINGENCY C107
text ... 1 phase fault on L6517 at 47C opens from 2C in 6 cycles assumes all tmp on-line
text ... 47C-601 breaker fails
text ... BBU opertes in 15 cycles trips TMP
text ... No SPS
text ...
pdev
2
c107-47C-601_BBU_nrecl-2013XP.pdv
fin
run to 0 seconds, print=0
apply fault on bus 199053 admittance 204.39  -1623.36 MVA
run to 6 cycles, print=0
trip line from bus 199053 to bus 199051 ckt 1
run to 20 cycles, print=0
clear fault
disconnect bus 199062
run to 5 seconds, print=0, plot=9
run to 10 seconds, print=0, plot=15
hold results in temp.snp and c107-47C-601_BBU_nrecl-2013XP.sav
end
stop
ECHO
@END
```

```
MENU,OFF      /* FORCE MENU TO CORRECT STATUS
PSAS
1

recover data from win13-iatr.snp and 2013XP-cnv.sav
start, output = c108a-91H-523_BBU_nrecl-2013XP.out
pss
text ...
text ... CONTINGENCY C108a - all gens on
text ... 1 phase fault on L5041 at 91H opens from 99h in 9 cycles
text ... 91H-523 breaker fails  No BBU installed
text ... Trips transfomersin 1 second
text ... No SPS
text ...
pdev
2
c108a-91H-523_BBU_nrecl-2013XP.pdv
fin
run to 0 seconds, print=0
apply fault on bus 199166 admittance 156.68  -1590.35 MVA
run to 9 cycles, print=0
trip line from bus 199166 to bus 199170 ckt 1
run to 60 cycles, print=0
clear fault
disconnect bus 199167
disconnect bus 199168
disconnect bus 199166
disconnect bus 199164
disconnect bus 199181
disconnect bus 199182
disconnect bus 199158
disconnect bus 199161
trip line from bus 199187 to bus 199165
trip line from bus 199165 to bus 199184
run to 5 seconds, print=0, plot=9
run to 10 seconds, print=0, plot=15
hold results in temp.snp and c108a-91H-523_BBU_nrecl-2013XP.sav
end
stop
ECHO
@END
```

```
MENU,OFF      /* FORCE MENU TO CORRECT STATUS
PSAS
1

recover data from win13-iatr.snp and 2013XP-cnv.sav
start, output = c108b-91H-523_BBU_nrecl-2013XP.out
pss
text ...
text ... CONTINGENCY C108b - TC1 off
text ... 1 phase fault on L5041 at 91H opens from 99h in 9 cycles
text ... 91H-523 breaker fails  No BBU installed
text ... Trips transfomers in 1 second
text ... No SPS
text ...
pdev
2
c108b-91H-523_BBU_nrecl-2013XP.pdv
fin
run to 0 seconds, print=0
apply fault on bus 199166 admittance 150.00  -1265.62 MVA
run to 9 cycles, print=0
trip line from bus 199166 to bus 199170 ckt 1
run to 60 cycles, print=0
clear fault
disconnect bus 199167
disconnect bus 199168
disconnect bus 199166
disconnect bus 199164
disconnect bus 199181
disconnect bus 199182
disconnect bus 199158
disconnect bus 199161
trip line from bus 199187 to bus 199165
trip line from bus 199165 to bus 199184
run to 5 seconds, print=0, plot=9
run to 10 seconds, print=0, plot=15
hold results in temp.snp and c108b-91H-523_BBU_nrecl-2013XP.sav
end
stop
ECHO
@END
```

```
MENU,OFF      /* FORCE MENU TO CORRECT STATUS
PSAS
1

recover data from win13-iatr.snp and 2013XP-cnv.sav
start, output = c108c-91H-523_BBU_nrecl-2013XP.out
pss
text ...
text ... CONTINGENCY C108c - TC1 and TC2 off
text ... 1 phase fault on L5041 at 91H opens from 99h in 9 cycles
text ... 91H-523 breaker fails  No BBU installed
text ... Trips transfomers in 1 second
text ... No SPS
text ...
pdev
2
c108c-91H-523_BBU_nrecl-2013XP.pdv
fin
run to 0 seconds, print=0
apply fault on bus 199166 admittance 136.78   -932.84 MVA
run to 9 cycles, print=0
trip line from bus 199166 to bus 199170 ckt 1
run to 60 cycles, print=0
clear fault
disconnect bus 199167
disconnect bus 199168
disconnect bus 199166
disconnect bus 199164
disconnect bus 199181
disconnect bus 199182
disconnect bus 199158
disconnect bus 199161
trip line from bus 199187 to bus 199165
trip line from bus 199165 to bus 199184
run to 5 seconds, print=0, plot=9
run to 10 seconds, print=0, plot=15
hold results in temp.snp and c108c-91H-523_BBU_nrecl-2013XP.sav
end
stop
ECHO
@END
```

```
MENU,OFF      /* FORCE MENU TO CORRECT STATUS
PSAS
1

recover data from win13-iatr.snp and 2013XP-cnv.sav
start, output = c108d-91H-523_BBU_nrecl-2013XP.out
pss
text ...
text ... CONTINGENCY C108c - all TC off
text ... 1 phase fault on L5041 at 91H opens from 99h in 9 cycles
text ... 91H-523 breaker fails  No BBU installed
text ... Trips transfomers in 1 second
text ... No SPS
text ...
pdev
2
c108d-91H-523_BBU_nrecl-2013XP.pdv
fin
run to 0 seconds, print=0
apply fault on bus 199166 admittance 146.55   -883.88 MVA
run to 9 cycles, print=0
trip line from bus 199166 to bus 199170 ckt 1
run to 60 cycles, print=0
clear fault
disconnect bus 199167
disconnect bus 199168
disconnect bus 199166
disconnect bus 199164
disconnect bus 199181
disconnect bus 199182
disconnect bus 199158
disconnect bus 199161
trip line from bus 199187 to bus 199165
trip line from bus 199165 to bus 199184
run to 5 seconds, print=0, plot=9
run to 10 seconds, print=0, plot=15
hold results in temp.snp and c108d-91H-523_BBU_nrecl-2013XP.sav
end
stop
ECHO
@END
```

```
MENU,OFF      /* FORCE MENU TO CORRECT STATUS
PSAS
1

recover data from win13-iatr.snp and 2013XP-cnv.sav
start, output = c109-101h-600_BBU_nrecl-2013XP.out
pss
text ...
text ... CONTINGENCY C109
text ... 1 phase fault on 101H-B62
text ... 101H-600 breaker fails
text ... BBU opertes in 15 cycles entire bus no reclosing
text ... No SPS
text ...
pdev
2
c109-101h-600_BBU_nrecl-2013XP.pdv
fin
run to 0 seconds, print=0
apply fault on bus 199185 admittance  316.47  -1336.35 MVA
run to 20 cycles, print=0
disconnect bus 199185
clear fault
run to 5 seconds, print=0, plot=9
run to 10 seconds, print=0, plot=15
hold results in temp.snp and c109-101h-600_BBU_nrecl-2013XP.sav
end
stop
ECHO
@END
```

```
MENU,OFF      /* FORCE MENU TO CORRECT STATUS
PSAS
1

recover data from win13-iatr.snp and 2013XP-cnv.sav
start, output = c110a-108h-609_BBU_nrecl-2013XP.out
pss
text ...
text ... CONTINGENCY C110a all BS on
text ... 1 phase fault on L6009 at 108H
text ... 108H-609 breaker fails
text ... BBU opertes in 15 cycles B2 no reclosing
text ... No SPS
text ...
pdev
2
c110a-108h-609_BBU_nrecl-2013XP.pdv
fin
run to 0 seconds, print=0
apply fault on bus 199187 admittance   302.61  -1890.60 MVA
run to 6 cycles, print=0
disconnect bus 199185
clear fault
apply fault on bus 199110 admittance 244.06  -1654.38 MVA
run to 15 cycles, print=0
clear fault
disconnect bus 199159
disconnect bus 199189
run to 5 seconds, print=0, plot=9
run to 10 seconds, print=0, plot=15
hold results in temp.snp and c110a-108h-607_BBU_nrecl-2013XP.sav
end
stop
ECHO
@END
```

```
MENU,OFF      /* FORCE MENU TO CORRECT STATUS
PSAS
1

recover data from win13-iatr.snp and 2013XP-cnv.sav
start, output = c110b-108h-609_BBU_nrecl-2013XP.out
pss
text ...
text ... CONTINGENCY C110b no BS on
text ... 1 phase fault on L6009 at 108H
text ... 108H-609 breaker fails
text ... BBU opertes in 15 cycles B2 no reclosing
text ... No SPS
text ...
pdev
2
c110b-108h-609_BBU_nrecl-2013XP.pdv
fin
run to 0 seconds, print=0
apply fault on bus 199187 admittance   286.59  -1267.11 MVA
run to 6 cycles, print=0
disconnect bus 199185
clear fault
apply fault on bus 199110 admittance 228.31  -1030.69 MVA
run to 15 cycles, print=0
clear fault
disconnect bus 199159
disconnect bus 199189
run to 5 seconds, print=0, plot=9
run to 10 seconds, print=0, plot=15
hold results in temp.snp and c110b-108h-607_BBU_nrecl-2013XP.sav
end
stop
ECHO
@END
```

```
MENU,OFF      /* FORCE MENU TO CORRECT STATUS
PSAS
1

recover data from win13-iatr.snp and 2013XP-cnv.sav
start, output = d03-1ph_50n604-2013XP.out
pss
text ...
text ... CONTINGENCY D03
text ... 1 phase fault on trenton Bus-tie Breaker 50n604
text ... 5 cycles, no reclosing, clears whole 138 kV station.
text ... including both units 5 and 6
text ...
pdev
2
d03-1ph_50n604-2013XP.pdv
fin
run to 0 seconds, print=0
apply fault on bus 199090, admittance = 175 -1800 mva
run for 5 cycles, print=0
clear fault
disconnect bus 199090
disconnect bus 199085
disconnect bus 199086
disconnect bus 199091
disconnect bus 199092
disconnect bus 199095
disconnect bus 199096
disconnect bus 199097
disconnect bus 199098
disconnect bus 199102
disconnect bus 199104
disconnect bus 199105
disconnect bus 199106
disconnect bus 199107
run to 5 seconds, print=0, plot=9
run to 10 seconds, print=0, plot=15
end
stop
ECHO
@END
```

```
MENU,OFF      /* FORCE MENU TO CORRECT STATUS
PSAS
1

recover data from win13-iatr.snp and 2013XP-cnv.sav
start, output = d04-88s721_1ph-2013XP.out
pss
TEXT ...
TEXT ... CONTINGENCY D04
TEXT ... SLG FAULT ON LINGAN breaker 88S721
TEXT ... trips unit 3 and 4 in 4 cycles
TEXT ... NO SPS
pdev
2
d04-88s721_1ph-2013XP.pdv
fin
run to 0 seconds, print=0
apply fault on bus 199000, admittance = 235 -2600 mva
run for 4 cycles, print=0
clear fault
disconnect bus 199003
disconnect bus 199004
run to 5 seconds, print=0 plot 7
run to 10 seconds, print=0 plot 15
end
stop
ECHO
@END
```

```
MENU,OFF      /* FORCE MENU TO CORRECT STATUS
PSAS
1

recover data from win13-iatr.snp and 2013XP-cnv.sav
start, output = d05-1n600_1ph-2013XP.out
pss
TEXT ...
TEXT ... CONTINGENCY D05
TEXT ... SLG FAULT ON ONSLOW breaker 1N-T600
TEXT ... Clears 138kV bus
TEXT ... NO SPS
pdev
2
d05-1n600_1ph-2013XP.pdv
fin
run to 0 seconds, print=0
apply fault on bus 199110, admittance = 170 -1240 mva
run for 6 cycles, print=0
clear fault
disconnect bus 199110
run to 5 seconds, print=0 plot 7
run to 10 seconds, print=0 plot 15
end
stop
ECHO
@END
```

```
MENU,OFF      /* FORCE MENU TO CORRECT STATUS
PSAS
1

recover data from win13-iatr.snp and 2013XP-cnv.sav
start, output = e01-lose-aconi-2013XP.out
pss
text ...
text ... CONTINGENCY E01
text ... no-fault, trip Aconi
text ...
text ...
pdev
2
e01-lose-aconi-2013XP.pdv
fin
run to 0 seconds, print=0
disconnect bus 199043
run to 5 seconds, print=0, plot=9
run to 10 seconds, print=0, plot=15
end
stop
ECHO
@END
```

```
MENU,OFF      /* FORCE MENU TO CORRECT STATUS
PSAS
1

recover data from win13-iatr.snp and 2013XP-cnv.sav
start, output = e02-lose-tc3-2013XP.out
pss
text ...
text ... CONTINGENCY E02
text ... no-fault, trip Tufts Cove 3
text ...
text ...
pdev
2
e02-lose-tc3-2013XP.pdv
fin
run to 0 seconds, print=0
disconnect bus 199169
run to 5 seconds, print=0, plot=9
run to 10 seconds, print=0, plot=15
end
stop
ECHO
@END
```

```
MENU,OFF      /* FORCE MENU TO CORRECT STATUS
PSAS
1

recover data from win13-iatr.snp and 2013XP-cnv.sav
start, output = e03-lose-stora-2013XP.out
pss
text ...
text ... CONTINGENCY E03
text ... no-fault, trip all stora load
text ...
text ...
pdev
2
e03-lose-stora-2013XP.pdv
fin
run to 0 seconds, print=0
disconnect bus 199053
disconnect bus 199054
disconnect bus 199060
disconnect bus 199061
disconnect bus 199062
disconnect bus 199064
run to 5 seconds, print=0, plot=9
run to 10 seconds, print=0, plot=15
end
stop
ECHO
@END
```

```
MENU,OFF      /* FORCE MENU TO CORRECT STATUS
PSAS
1

recover data from win13-iatr.snp and 2013XP-cnv.sav
start, output = e04-lose-bmpc-2013XP.out
pss
text ...
text ... CONTINGENCY E04
text ... no-fault, trip all bmpc load
text ...
text ...
pdev
2
e04-lose-bmpc-2013XP.pdv
fin
run to 0 seconds, print=0
disconnect bus 199277
disconnect bus 199278
run to 5 seconds, print=0, plot=9
run to 10 seconds, print=0, plot=15
end
stop
ECHO
@END
```

```
MENU,OFF      /* FORCE MENU TO CORRECT STATUS
PSAS
1

recover data from win13-iatr.snp and 2013XP-cnv.sav
start, output = e101-103H-600-1p_nrecl-2013XP.out
pss
text ...
text ... CONTINGENCY E101
text ... 1 phase fault on Bus tie breaker 103H-600 at Lakeside
text ... Clears bus
text ...
text ... no sps
text ...
pdev
2
e101-103H-600-1p_nrecl-2013XP.pdv
fin
run to 0 seconds, print=0
apply fault on bus 199190 admittance 246.42  -1458.01 MVA
run to 6 cycles, print=0
clear fault
disconnect bus 199190
run to 5 seconds, print=0, plot=9
run to 10 seconds, print=0, plot=15
hold results in temp.snp and e101-103H-600-1p_nrecl-2013XP.sav
end
stop
ECHO
@END
```

```
MENU,OFF      /* FORCE MENU TO CORRECT STATUS
PSAS
1

recover data from win13-iatr.snp and 2013XP-cnv.sav
start, output = e102-47C-602-1p_nrecl-2013XP.out
pss
text ...
text ... CONTINGENCY E102
text ... 1 phase fault on  breaker 47C-602 at Lakeside
text ... Clears 2 TMP
text ...
text ... no sps
text ...
pdev
2
e102-47C-602-1p_nrecl-2013XP.pdv
fin
run to 0 seconds, print=0
apply fault on bus 199190 admittance 204.39  -1623.36 MVA
run to 6 cycles, print=0
clear fault
disconnect bus 199062
disconnect bus 199061
run to 5 seconds, print=0, plot=9
run to 10 seconds, print=0, plot=15
hold results in temp.snp and e102-47C-602-1p_nrecl-2013XP.sav
end
stop
ECHO
@END
```

```
MENU,OFF      /* FORCE MENU TO CORRECT STATUS
PSAS
1

recover data from win13-iatr.snp and 2013XP-cnv.sav
start, output = e103a-91H-523-1p_nrecl-2013XP.out
pss
text ...
text ... CONTINGENCY E103a all tc on
text ... 1 phase fault on  breaker 91H-523 at Tuft's Cove 69kV
text ... Clears 5041 and T11
text ...
text ... no sps
text ...
pdev
2
e103a-91H-523-1p_nrecl-2013XP.pdv
fin
run to 0 seconds, print=0
apply fault on bus 199166 admittance 156.68  -1590.35 MVA
run to 9 cycles, print=0
clear fault
trip line from bus 199166 to bus 199165 ckt 1
trip line from bus 199166 to bus 199170 ckt 1
run to 5 seconds, print=0, plot=9
run to 10 seconds, print=0, plot=15
hold results in temp.snp and e103a-91H-523-1p_nrecl-2013XP.sav
end
stop
ECHO
@END
```

```
MENU,OFF      /* FORCE MENU TO CORRECT STATUS
PSAS
1

recover data from win13-iatr.snp and 2013XP-cnv.sav
start, output = e103b-91H-523-1p_nrecl-2013XP.out
pss
text ...
text ... CONTINGENCY E103b tc1 off
text ... 1 phase fault on  breaker 91H-523 at Tuft's Cove 69kV
text ... Clears 5041 and T11
text ...
text ... no sps
text ...
pdev
2
e103b-91H-523-1p_nrecl-2013XP.pdv
fin
run to 0 seconds, print=0
apply fault on bus 199166 admittance 150.00  -1265.62 MVA
run to 9 cycles, print=0
clear fault
trip line from bus 199166 to bus 199165 ckt 1
trip line from bus 199166 to bus 199170 ckt 1
run to 5 seconds, print=0, plot=9
run to 10 seconds, print=0, plot=15
hold results in temp.snp and e103b-91H-523-1p_nrecl-2013XP.sav
end
stop
ECHO
@END
```

```
MENU,OFF      /* FORCE MENU TO CORRECT STATUS
PSAS
1

recover data from win13-iatr.snp and 2013XP-cnv.sav
start, output = e103c-91H-523-1p_nrecl-2013XP.out
pss
text ...
text ... CONTINGENCY E103c tc 1 2 off
text ... 1 phase fault on  breaker 91H-523 at Tuft's Cove 69kV
text ... Clears 5041 and T11
text ...
text ... no sps
text ...
pdev
2
e103b-91H-523-1p_nrecl-2013XP.pdv
fin
run to 0 seconds, print=0
apply fault on bus 199166 admittance 136.78   -932.84 MVA
run to 9 cycles, print=0
clear fault
trip line from bus 199166 to bus 199165 ckt 1
trip line from bus 199166 to bus 199170 ckt 1
run to 5 seconds, print=0, plot=9
run to 10 seconds, print=0, plot=15
hold results in temp.snp and e103c-91H-523-1p_nrecl-2013XP.sav
end
stop
ECHO
@END
```

```
MENU,OFF      /* FORCE MENU TO CORRECT STATUS
PSAS
1

recover data from win13-iatr.snp and 2013XP-cnv.sav
start, output = e103d-91H-523-1p_nrecl-2013XP.out
pss
text ...
text ... CONTINGENCY E103b all tc off
text ... 1 phase fault on  breaker 91H-523 at Tuft's Cove 69kV
text ... Clears 5041 and T11
text ...
text ... no sps
text ...
pdev
2
e103d-91H-523-1p_nrecl-2013XP.pdv
fin
run to 0 seconds, print=0
apply fault on bus 199166 admittance 146.55   -883.88 MVA
run to 9 cycles, print=0
clear fault
trip line from bus 199166 to bus 199165 ckt 1
trip line from bus 199166 to bus 199170 ckt 1
run to 5 seconds, print=0, plot=9
run to 10 seconds, print=0, plot=15
hold results in temp.snp and e103d-91H-523-1p_nrecl-2013XP.sav
end
stop
ECHO
@END
```

```
MENU,OFF      /* FORCE MENU TO CORRECT STATUS
PSAS
1

recover data from win13-iatr.snp and 2013XP-cnv.sav
start, output = e104a-104H-600-1p_nrecl-2013XP.out
pss
text ...
text ... CONTINGENCY E104a all ns on
text ... 1 phase fault on  breaker 104h-600 at burnside 138kv
text ... Clears bus
text ...
text ... no sps
text ...
pdev
2
e104a-104H-600-1p_nrecl-2013XP.pdv
fin
run to 0 seconds, print=0
apply fault on bus 199198 admittance 272.27  -1453.51 MVA
run to 9 cycles, print=0
clear fault
disconnect bus 199198
run to 5 seconds, print=0, plot=9
run to 10 seconds, print=0, plot=15
hold results in temp.snp and e104a-104H-600-1p_nrecl-2013XP.sav
end
stop
ECHO
@END
```

```
MENU,OFF      /* FORCE MENU TO CORRECT STATUS
PSAS
1

recover data from win13-iatr.snp and 2013XP-cnv.sav
start, output = e104b-104H-600-1p_nrecl-2013XP.out
pss
text ...
text ... CONTINGENCY E104b all bs off
text ... 1 phase fault on  breaker 104h-600 at burnside 138kv
text ... Clears bus
text ...
text ... no sps
text ...
pdev
2
e104b-104H-600-1p_nrecl-2013XP.pdv
fin
run to 0 seconds, print=0
apply fault on bus 199198 admittance 253.13  -1358.50 MVA
run to 9 cycles, print=0
clear fault
disconnect bus 199198
run to 5 seconds, print=0, plot=9
run to 10 seconds, print=0, plot=15
hold results in temp.snp and e104b-104H-600-1p_nrecl-2013XP.sav
end
stop
ECHO
@END
```

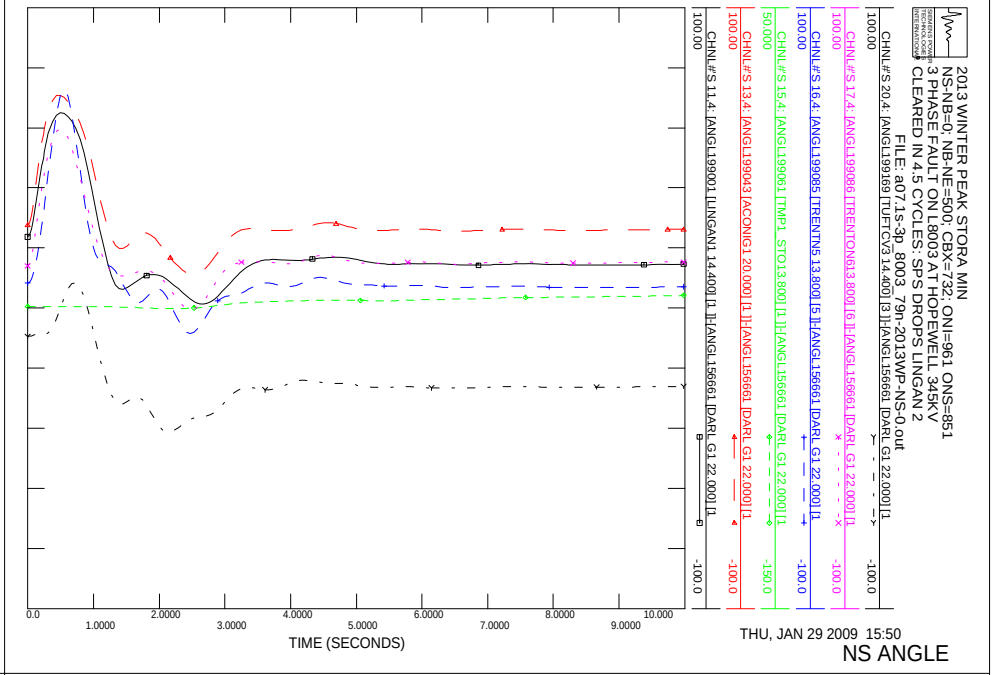
2013 WINTER PEAK STORA MIN
NS-NB=0; NB-NE=500; CBX=732; ONI=961 ONS=851
3 PHASE FAULT ON L8003 AT HOPEWELL 345KV
CLEARED IN 4.5 CYCLES: SPS DROPS LINGAN 2
FILE: a07.1s-3p_8003_79n-2013WP-NS-0.out
CHNL# 20: [ANGL199169 [TUFTCV3 14.400] [3]] [ANGL156661 [DARL G1 22.000] [1
CHNL# 17: [ANGL199086 [TRENTON613.800] [6]] [ANGL156661 [DARL G1 22.000] [1
CHNL# 16: [ANGL199085 [TRENTN5 13.800] [5]] [ANGL156661 [DARL G1 22.000] [1
CHNL# 15: [ANGL199061 [TMP1 STO13.800] [1]] [ANGL156661 [DARL G1 22.000] [1
CHNL# 13: [ANGL199043 [ACONIG1 20.000] [1]] [ANGL156661 [DARL G1 22.000] [1
CHNL# 11: [ANGL199001 [LINGAN1 14.400] [1]] [ANGL156661 [DARL G1 22.000] [1
100.00
-100.0
50.000
-150.0
THU, JAN 29 2009 15:50
TIME (SECONDS)
NS ANGLE

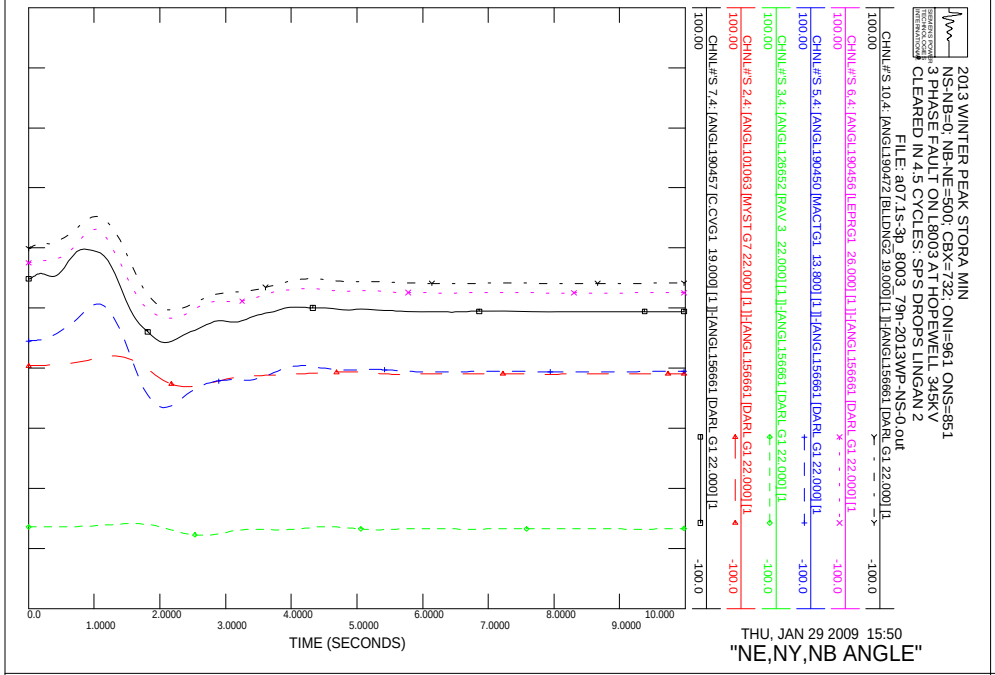
2013 WINTER PEAK STORA MIN
NS-NB=0; NB-NE=500; CBX=732; ONI=961 ONS=851
3 PHASE FAULT ON L8003 AT HOPEWELL 345KV
CLEARED IN 4.5 CYCLES: SPS DROPS LINGAN 2
FILE: a07.1s-3p_8003_79n-2013WP-NS-0.out
CHNL# 10: [ANGL190472 [BLLDNG2 19.000] [1]] [ANGL156661 [DARL G1 22.000] [1
CHNL# 6: [ANGL190456 [LEPRG1 26.000] [1]] [ANGL156661 [DARL G1 22.000] [1
CHNL# 5: [ANGL190450 [MACTG1 13.800] [1]] [ANGL156661 [DARL G1 22.000] [1
CHNL# 3: [ANGL126652 [RAV 3 22.000] [1]] [ANGL156661 [DARL G1 22.000] [1
CHNL# 2: [ANGL101063 [MYST G7 22.000] [1]] [ANGL156661 [DARL G1 22.000] [1
CHNL# 7: [ANGL190457 [C.CVG1 19.000] [1]] [ANGL156661 [DARL G1 22.000] [1
100.00
-100.0
THU, JAN 29 2009 15:50
TIME (SECONDS)
"NE,NY,NB ANGLE"

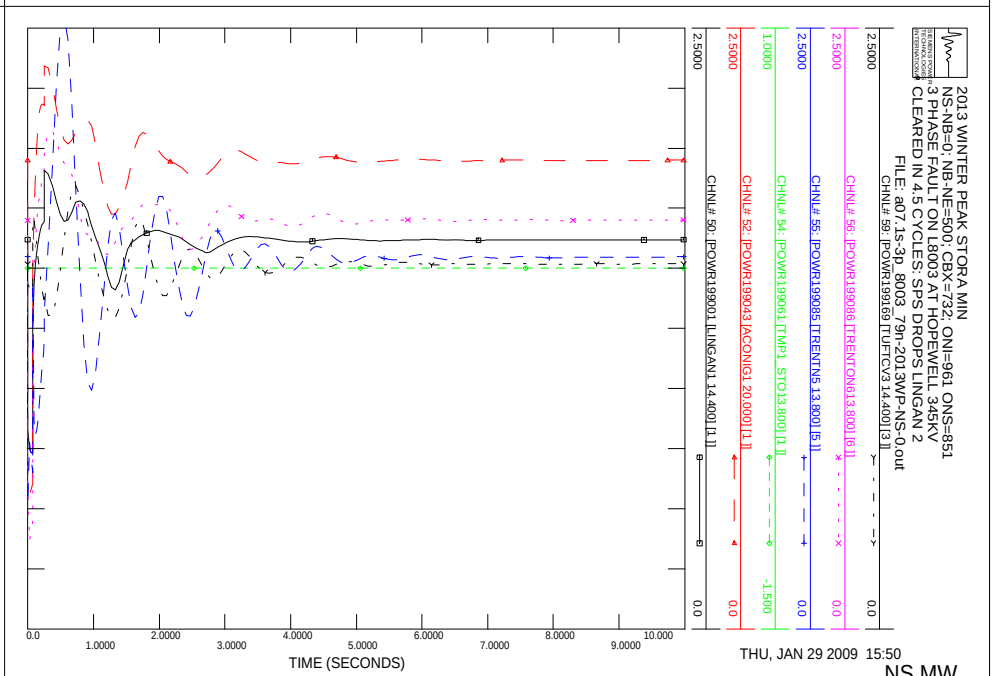
2013 WINTER PEAK STORA MIN
NS-NB=0; NB-NE=500; CBX=732; ONI=961 ONS=851
3 PHASE FAULT ON L8003 AT HOPEWELL 345KV
CLEARED IN 4.5 CYCLES: SPS DROPS LINGAN 2
FILE: a07.1s-3p_8003_79n-2013WP-NS-0.out
CHNL# 59: [POWR199169 [TUFTCV3 14.400] [3]]
CHNL# 56: [POWR199086 [TRENTON613.800] [6]]
CHNL# 55: [POWR199085 [TRENTN5 13.800] [5]]
CHNL# 54: [POWR199061 [TMP1 STO13.800] [1]]
CHNL# 52: [POWR199043 [ACONIG1 20.000] [1]]
CHNL# 50: [POWR199001 [LINGAN1 14.400] [1]]
2.5000
0.0
1.0000
-1.500
THU, JAN 29 2009 15:50
TIME (SECONDS)
NS MW

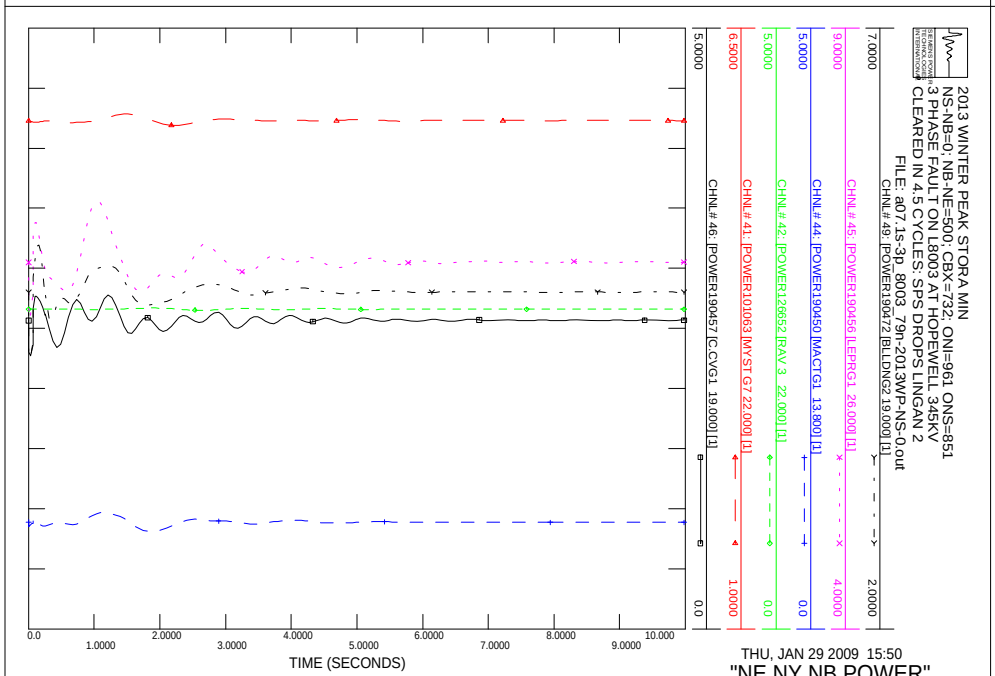
2013 WINTER PEAK STORA MIN
NS-NB=0; NB-NE=500; CBX=732; ONI=961 ONS=851
3 PHASE FAULT ON L8003 AT HOPEWELL 345KV
CLEARED IN 4.5 CYCLES: SPS DROPS LINGAN 2
FILE: a07.1s-3p_8003_79n-2013WP-NS-0.out
CHNL# 49: [POWER190472 [BLLDNG2 19.000] [1]]
CHNL# 45: [POWER190456 [LEPRG1 26.000] [1]]
CHNL# 44: [POWER190450 [MACTG1 13.800] [1]]
CHNL# 42: [POWER126652 [RAV 3 22.000] [1]]
CHNL# 41: [POWER101063 [MYST G7 22.000] [1]]
CHNL# 46: [POWER190457 [C.CVG1 19.000] [1]]
7.0000
2.0000
9.0000
4.0000
5.0000
0.0
6.5000
1.0000
5.0000
0.0
THU, JAN 29 2009 15:50
TIME (SECONDS)
"NE,NY,NB POWER"

2013 WINTER PEAK STORA MIN
NS-NB=0; NB-NE=500; CBX=732; ONI=961 ONS=851
3 PHASE FAULT ON L8003 AT HOPEWELL 345KV
CLEARED IN 4.5 CYCLES: SPS DROPS LINGAN 2
FILE: a07.1s-3p_8003_79n-2013WP-NS-0.out
CHNL# 119: [VARS IR141-DIGBY]
CHNL# 118: [VARS IR137-STATIA]
CHNL# 117: [VARS IR114-GLENDHU]
CHNL# 116: [VARS IR84-DALHOUSIE]
CHNL# 115: [VARS IR82_NUTTBY]
CHNL# 114: [VARS IR45_AMHERST]
0.50000
-0.5000
0.0
1.0000
2.0000
3.0000
4.0000
5.0000
6.0000
7.0000
8.0000
9.0000
10.000
TIME (SECONDS)
THU, JAN 29 2009 15:50
NS WIND MV

2013 WINTER PEAK STORA MIN
NS-NB=0; NB-NE=500; CBX=732; ONI=961 ONS=851
3 PHASE FAULT ON L8003 AT HOPEWELL 345KV
CLEARED IN 4.5 CYCLES: SPS DROPS LINGAN 2
FILE: a07.1s-3p_8003_79n-2013WP-NS-0.out
CHNL# 79: [POWER IR141-DIGBY]
CHNL# 78: [POWER IR137-STATIA]
CHNL# 77: [POWER IR114-GLENDHU]
CHNL# 76: [POWER IR84-DALHOUSIE]
CHNL# 75: [POWER IR82_NUTTBY]
CHNL# 74: [POWER IR45_AMHERST]
1.0000
0.0
0.0
1.0000
2.0000
3.0000
4.0000
5.0000
6.0000
7.0000
8.0000
9.0000
10.000
TIME (SECONDS)
THU, JAN 29 2009 15:50
NS WIND MW

2013 WINTER PEAK STORA MIN
NS-NB=0; NB-NE=500; CBX=732; ONI=961 ONS=851
3 PHASE FAULT ON L8003 AT HOPEWELL 345KV
CLEARED IN 4.5 CYCLES: SPS DROPS LINGAN 2
FILE: a07.1s-3p_8003_79n-2013WP-NS-0.out
CHNL# 133: [VOLT199125 IONSLOW 345.00]
CHNL# 132: [VOLT199120 IHOPEWELL345.00]
CHNL# 131: [VOLT199045 IWOODBINE345.00]
CHNL# 130: [VOLT190320 ISALBRY 345.00]
CHNL# 128: [VOLT190004 IKESWICK 345.00]
CHNL# 127: [VOLT 70002 IORRINGTN345.00]
1.1000
0.90000
0.0
1.0000
2.0000
3.0000
4.0000
5.0000
6.0000
7.0000
8.0000
9.0000
10.000
TIME (SECONDS)
THU, JAN 29 2009 15:50
"345KV VOLTAGE"

2013 WINTER PEAK STORA MIN
NS-NB=0; NB-NE=500; CBX=732; ONI=961 ONS=851
3 PHASE FAULT ON L8003 AT HOPEWELL 345KV
CLEARED IN 4.5 CYCLES: SPS DROPS LINGAN 2
FILE: a07.1s-3p_8003_79n-2013WP-NS-0.out
CHNL# 125: 60*(1+[FREQ199125 IONSLOW 345.00])
CHNL# 124: 60*(1+[FREQ199120 IHOPEWELL345.00])
CHNL# 123: 60*(1+[FREQ199045 IWOODBINE345.00])
CHNL# 122: 60*(1+[FREQ190320 ISALBRY 345.00])
CHNL# 121: 60*(1+[FREQ190197 IC.COVE 345.00])
CHNL# 120: 60*(1+[FREQ 70002 IORRINGTN345.00])
60.500
59.500
0.0
1.0000
2.0000
3.0000
4.0000
5.0000
6.0000
7.0000
8.0000
9.0000
10.000
TIME (SECONDS)
THU, JAN 29 2009 15:50
FREQUENCY HZ

2013 WINTER PEAK STORA MIN
NS-NB=0; NB-NE=500; CBX=732; ONI=961 ONS=851
3 PHASE FAULT ON L8003 AT HOPEWELL 345KV
CLEARED IN 4.5 CYCLES: SPS DROPS LINGAN 2
FILE: a07.1s-3p_8003_79n-2013WP-NS-0.out
CHNL# 146: [VOLT199280 [TUSKET A138.00]]
CHNL# 145: [VOLT199193 [HHWAS 138.00]]
CHNL# 144: [VOLT199165 [TUFTCOVE138.00]]
CHNL# 143: [VOLT199138 [SPRNGHILL138.00]]
CHNL# 142: [VOLT199090 [SON-TREN138.00]]
CHNL# 141: [VOLT199051 [HASTINGS138.00]]
1.2000
0.70000
0.0
1.0000
2.0000
3.0000
4.0000
5.0000
6.0000
7.0000
8.0000
9.0000
10.000
TIME (SECONDS)
THU, JAN 29 2009 15:50
138KV BUS VOLTS

2013 WINTER PEAK STORA MIN
NS-NB=0; NB-NE=500; CBX=732; ONI=961 ONS=851
3 PHASE FAULT ON L8003 AT HOPEWELL 345KV
CLEARED IN 4.5 CYCLES: SPS DROPS LINGAN 2
FILE: a07.1s-3p_8003_79n-2013WP-NS-0.out
CHNL# 140: [VOLT199240 [BWATER A230.00]]
CHNL# 139: [VOLT199200 [BRUSHY 230.00]]
CHNL# 138: [VOLT199130 [ONSLOW 230.00]]
CHNL# 137: [VOLT199050 [HASTINGS230.00]]
CHNL# 136: [VOLT199044 [PT.ACONI230.00]]
CHNL# 135: [VOLT199000 [LINGAN 230.00]]
1.2000
0.70000
0.0
1.0000
2.0000
3.0000
4.0000
5.0000
6.0000
7.0000
8.0000
9.0000
10.000
TIME (SECONDS)
THU, JAN 29 2009 15:50
230KV BUS VOLTS

2013 WINTER PEAK STORA MIN
NS-NB=0; NB-NE=500; CBX=732; ONI=961 ONS=851
3 PHASE FAULT ON L8003 AT HOPEWELL 345KV
CLEARED IN 4.5 CYCLES: SPS DROPS LINGAN 2
FILE: a07.1s-3p_8003_79n-2013WP-NS-0.out
CHNL# 217: [L6513MW]
CHNL# 215: [L6503MW]
CHNL# 197: [L8003MW]
CHNL# 195: [L8004MW]
CHNL# 193: [L8001MW]
CHNL# 221: [L3001MW]
250.00
500.00
0.0
-250.0
1000.0
-1000.
0.0
1.0000
2.0000
3.0000
4.0000
5.0000
6.0000
7.0000
8.0000
9.0000
10.000
TIME (SECONDS)
THU, JAN 29 2009 15:50
LINE FLOW MW

2013 WINTER PEAK STORA MIN
NS-NB=0; NB-NE=500; CBX=732; ONI=961 ONS=851
3 PHASE FAULT ON L8003 AT HOPEWELL 345KV
CLEARED IN 4.5 CYCLES: SPS DROPS LINGAN 2
FILE: a07.1s-3p_8003_79n-2013WP-NS-0.out
CHNL# 154: [IR141-DIGBYH69.0 VOLTS]
CHNL# 153: [IR137-STATIG25.0 VOLTS]
CHNL# 152: [IR114-GLENDH138.0 VOLTS]
CHNL# 151: [IR84-DALHOHV230.0 VOLTS]
CHNL# 150: [IR82_NUTBHV69.0 VOLTS]
CHNL# 149: [IR45_AMHERTP138.0 VOLTS]
1.2000
0.70000
0.0
1.0000
2.0000
3.0000
4.0000
5.0000
6.0000
7.0000
8.0000
9.0000
10.000
TIME (SECONDS)
THU, JAN 29 2009 15:50
WIND BUS VOLTS

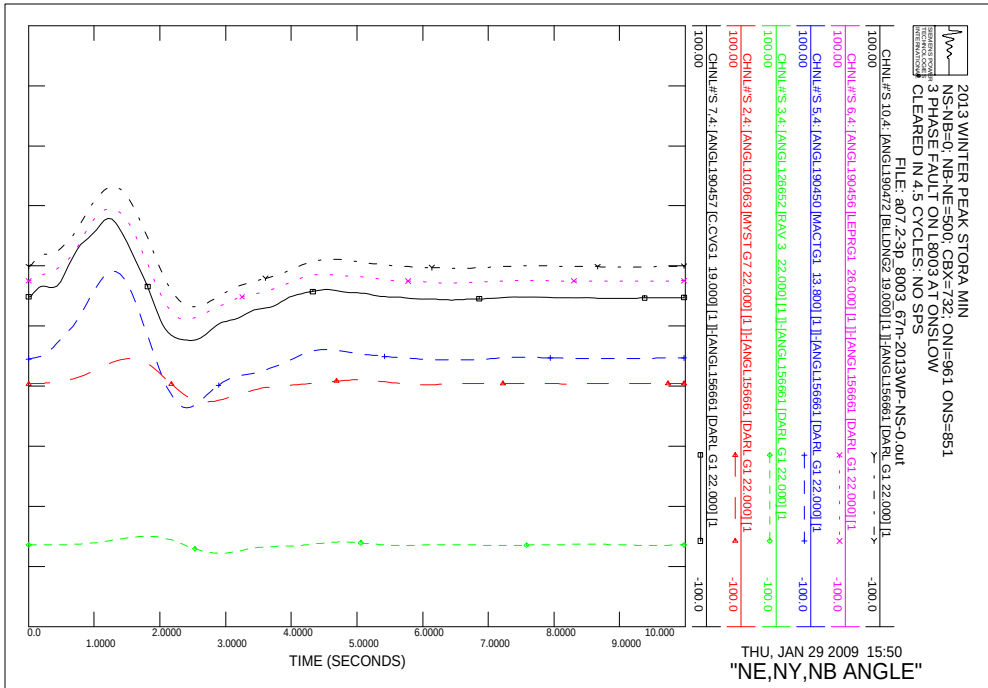
2013 WINTER PEAK STORA MIN
NS-NB=0; NB-NE=500; CBX=732; ONI=961 ONS=851
3 PHASE FAULT ON L8003 AT ONSLOW
CLEARED IN 4.5 CYCLES: NO SPS
FILE: a07.2-3p_8003_67n-2013WP-NS-0.out
CHNL#S 10,4: [ANGL190472 [BLLDNG2 19.000] [1]]-[ANGL156661 [DARL G1 22.000] [1
CHNL#S 6,4: [ANGL190456 [LEPRG1 26.000] [1]]-[ANGL156661 [DARL G1 22.000] [1
CHNL#S 5,4: [ANGL190450 [MACTG1 13.800] [1]]-[ANGL156661 [DARL G1 22.000] [1
CHNL#S 3,4: [ANGL126652 [RAV 3 22.000] [1]]-[ANGL156661 [DARL G1 22.000] [1
CHNL#S 2,4: [ANGL101063 [MYST G7 22.000] [1]]-[ANGL156661 [DARL G1 22.000] [1
CHNL#S 7,4: [ANGL190457 [C.CVG1 19.000] [1]]-[ANGL156661 [DARL G1 22.000] [1
100.00
-100.0
TIME (SECONDS)
THU, JAN 29 2009 15:50
"NE,NY,NB ANGLE"

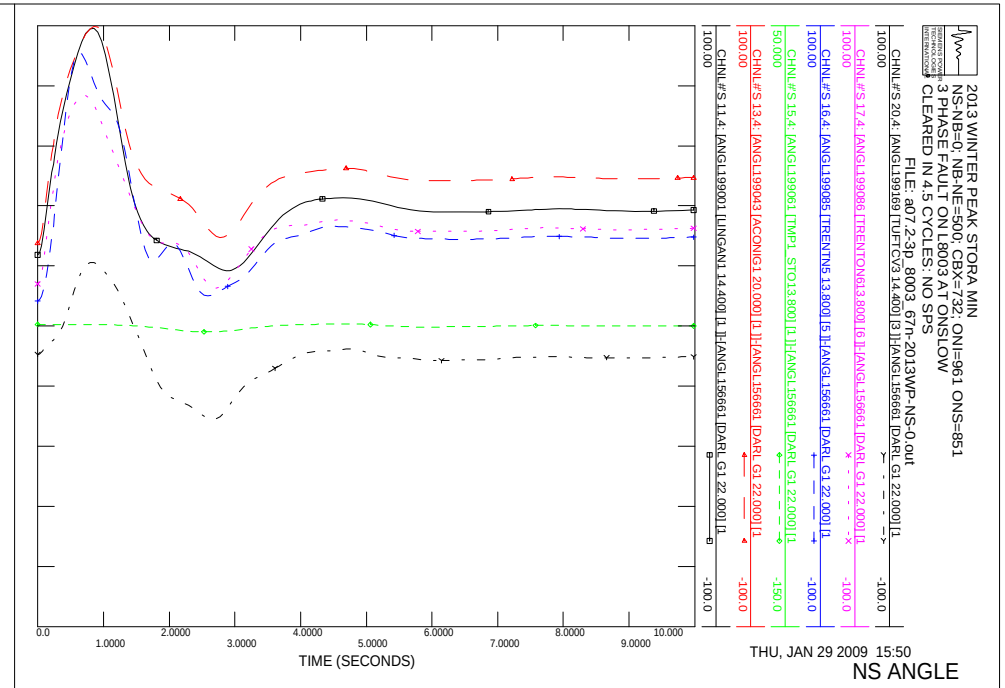
2013 WINTER PEAK STORA MIN
NS-NB=0; NB-NE=500; CBX=732; ONI=961 ONS=851
3 PHASE FAULT ON L8003 AT ONSLOW
CLEARED IN 4.5 CYCLES: NO SPS
FILE: a07.2-3p_8003_67n-2013WP-NS-0.out
CHNL#S 20,4: [ANGL199169 [TUFTCV3 14.400] [3]]-[ANGL156661 [DARL G1 22.000] [1
CHNL#S 17,4: [ANGL199086 [TRENTON613.800] [6]]-[ANGL156661 [DARL G1 22.000] [1
CHNL#S 16,4: [ANGL199085 [TRENTN5 13.800] [5]]-[ANGL156661 [DARL G1 22.000] [1
CHNL#S 15,4: [ANGL199061 [TMP1 STO13.800] [1]]-[ANGL156661 [DARL G1 22.000] [1
CHNL#S 13,4: [ANGL199043 [ACONIG1 20.000] [1]]-[ANGL156661 [DARL G1 22.000] [1
CHNL#S 11,4: [ANGL199001 [LINGAN1 14.400] [1]]-[ANGL156661 [DARL G1 22.000] [1
100.00
-100.0
TIME (SECONDS)
THU, JAN 29 2009 15:50
NS ANGLE

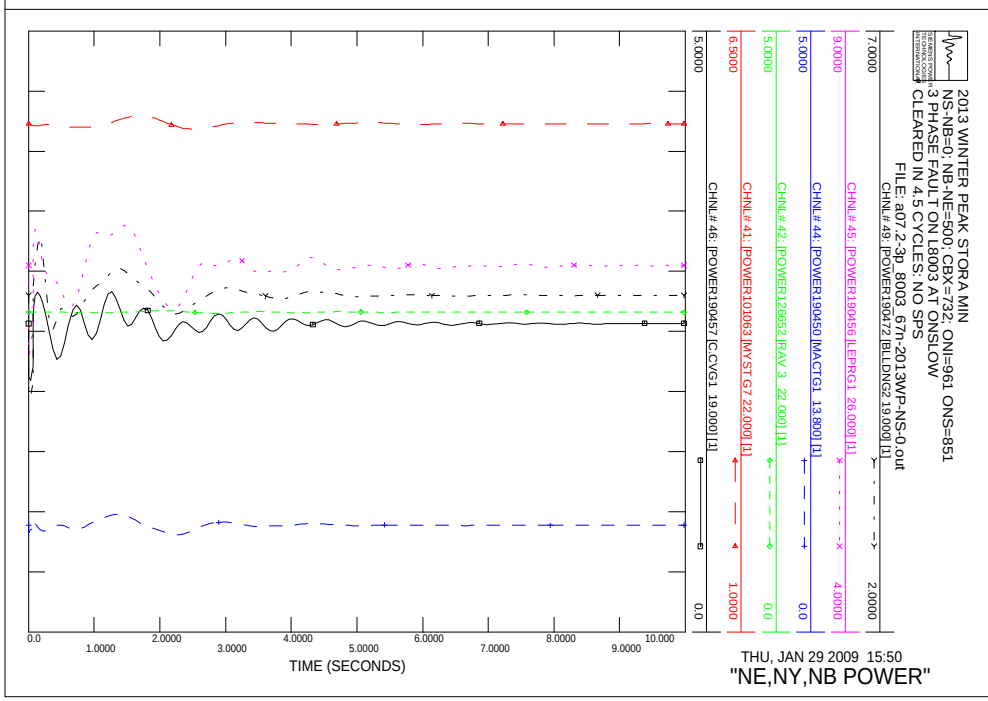
2013 WINTER PEAK STORA MIN
NS-NB=0; NB-NE=500; CBX=732; ONI=961 ONS=851
3 PHASE FAULT ON L8003 AT ONSLOW
CLEARED IN 4.5 CYCLES: NO SPS
FILE: a07.2-3p_8003_67n-2013WP-NS-0.out
CHNL# 49: [POWER190472 [BLLDNG2 19.000] [1]]
CHNL# 45: [POWER190456 [LEPRG1 26.000] [1]]
CHNL# 44: [POWER190450 [MACTG1 13.800] [1]]
CHNL# 42: [POWER126652 [RAV 3 22.000] [1]]
CHNL# 41: [POWER101063 [MYST G7 22.000] [1]]
CHNL# 46: [POWER190457 [C.CVG1 19.000] [1]]
7.0000
2.0000
9.0000
4.0000
5.0000
0.0
6.5000
1.0000
5.0000
0.0
TIME (SECONDS)
THU, JAN 29 2009 15:50
"NE,NY,NB POWER"

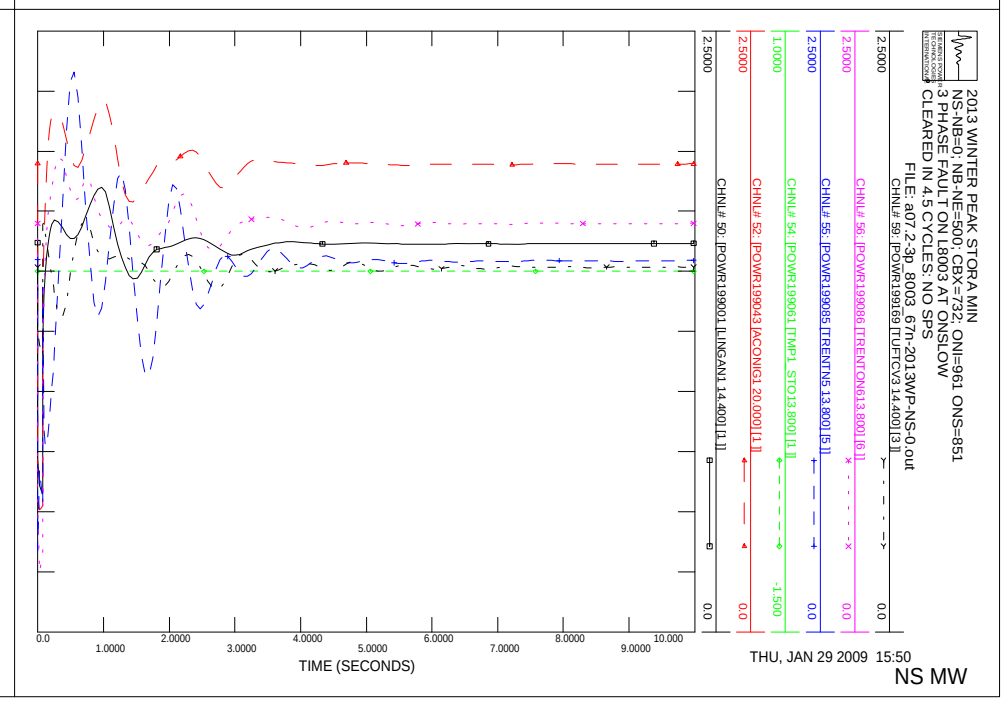
2013 WINTER PEAK STORA MIN
NS-NB=0; NB-NE=500; CBX=732; ONI=961 ONS=851
3 PHASE FAULT ON L8003 AT ONSLOW
CLEARED IN 4.5 CYCLES: NO SPS
FILE: a07.2-3p_8003_67n-2013WP-NS-0.out
CHNL# 59: [POWR199169 [TUFTCV3 14.400] [3]]
CHNL# 56: [POWR199086 [TRENTON613.800] [6]]
CHNL# 55: [POWR199085 [TRENTN5 13.800] [5]]
CHNL# 54: [POWR199061 [TMP1 STO13.800] [1]]
CHNL# 52: [POWR199043 [ACONIG1 20.000] [1]]
CHNL# 50: [POWR199001 [LINGAN1 14.400] [1]]
2.5000
0.0
2.5000
0.0
2.5000
0.0
1.0000
-1.500
2.5000
0.0
2.5000
0.0
TIME (SECONDS)
THU, JAN 29 2009 15:50
NS MW

2013 WINTER PEAK STORA MIN
NS-NB=0; NB-NE=500; CBX=732; ONI=961 ONS=851
3 PHASE FAULT ON L8003 AT ONSLOW
CLEARED IN 4.5 CYCLES: NO SPS
FILE: a07.2-3p_8003_67n-2013WP-NS-0.out
CHNL# 119: [VARS IR141-DIGBY]
CHNL# 118: [VARS IR137-STATIA]
CHNL# 117: [VARS IR114-GLENDHU]
CHNL# 116: [VARS IR84-DALHOUSIE]
CHNL# 115: [VARS IR82_NUTTBY]
CHNL# 114: [VARS IR45_AMHERST]
TIME (SECONDS)
THU, JAN 29 2009 15:50
NS WIND MV

2013 WINTER PEAK STORA MIN
NS-NB=0; NB-NE=500; CBX=732; ONI=961 ONS=851
3 PHASE FAULT ON L8003 AT ONSLOW
CLEARED IN 4.5 CYCLES: NO SPS
FILE: a07.2-3p_8003_67n-2013WP-NS-0.out
CHNL# 79: [POWER IR141-DIGBY]
CHNL# 78: [POWER IR137-STATIA]
CHNL# 77: [POWER IR114-GLENDHU]
CHNL# 76: [POWER IR84-DALHOUSIE]
CHNL# 75: [POWER IR82_NUTTBY]
CHNL# 74: [POWER IR45_AMHERST]
TIME (SECONDS)
THU, JAN 29 2009 15:50
NS WIND MW

2013 WINTER PEAK STORA MIN
NS-NB=0; NB-NE=500; CBX=732; ONI=961 ONS=851
3 PHASE FAULT ON L8003 AT ONSLOW
CLEARED IN 4.5 CYCLES: NO SPS
FILE: a07.2-3p_8003_67n-2013WP-NS-0.out
CHNL# 133: [VOLT199125 [ONSLOW 345.00]]
CHNL# 132: [VOLT199120 [HOPEWELL 345.00]]
CHNL# 131: [VOLT199045 [WOODBINE345.00]]
CHNL# 130: [VOLT190320 [SALBRY 345.00]]
CHNL# 128: [VOLT190004 [KESWICK 345.00]]
CHNL# 127: [VOLT 70002 [ORRINGTN345.00]]
TIME (SECONDS)
THU, JAN 29 2009 15:50
"345KV VOLTAGE"

2013 WINTER PEAK STORA MIN
NS-NB=0; NB-NE=500; CBX=732; ONI=961 ONS=851
3 PHASE FAULT ON L8003 AT ONSLOW
CLEARED IN 4.5 CYCLES: NO SPS
FILE: a07.2-3p_8003_67n-2013WP-NS-0.out
CHNL# 125: 60*(1+[FREQ199125 [ONSLOW 345.00]])
CHNL# 124: 60*(1+[FREQ199120 [HOPEWELL 345.00]])
CHNL# 123: 60*(1+[FREQ199045 [WOODBINE345.00]])
CHNL# 122: 60*(1+[FREQ190320 [SALBRY 345.00]])
CHNL# 121: 60*(1+[FREQ190197 [C.COVE 345.00]])
CHNL# 120: 60*(1+[FREQ 70002 [ORRINGTN345.00]])
TIME (SECONDS)
THU, JAN 29 2009 15:50
FREQUENCY HZ

2013 WINTER PEAK STORA MIN
NS-NB=0; NB-NE=500; CBX=732; ONI=961 ONS=851
3 PHASE FAULT ON L8003 AT ONSLOW
CLEARED IN 4.5 CYCLES: NO SPS
FILE: a07.2-3p_8003_67n-2013WP-NS-0.out
CHNL# 146: [VOLT199280 [TUSKET A138.00]]
CHNL# 145: [VOLT199193 [HHWAS 138.00]]
CHNL# 144: [VOLT199165 [TUFTCOVE138.00]]
CHNL# 143: [VOLT199135 [SPRNGHILL138.00]]
CHNL# 142: [VOLT199090 [SON-TREN138.00]]
CHNL# 141: [VOLT199051 [HASTINGS138.00]]
1.2000
0.70000
0.0
1.0000
2.0000
3.0000
4.0000
5.0000
6.0000
7.0000
8.0000
9.0000
10.000
TIME (SECONDS)
THU, JAN 29 2009 15:50
138KV BUS VOLTS

2013 WINTER PEAK STORA MIN
NS-NB=0; NB-NE=500; CBX=732; ONI=961 ONS=851
3 PHASE FAULT ON L8003 AT ONSLOW
CLEARED IN 4.5 CYCLES: NO SPS
FILE: a07.2-3p_8003_67n-2013WP-NS-0.out
CHNL# 140: [VOLT199240 [BWATER A230.00]]
CHNL# 139: [VOLT199200 [BRUSHY 230.00]]
CHNL# 138: [VOLT199130 [ONSLOW 230.00]]
CHNL# 137: [VOLT199050 [HASTINGS230.00]]
CHNL# 136: [VOLT199044 [PT.ACONI230.00]]
CHNL# 135: [VOLT199000 [LINGAN 230.00]]
1.2000
0.70000
0.0
1.0000
2.0000
3.0000
4.0000
5.0000
6.0000
7.0000
8.0000
9.0000
10.000
TIME (SECONDS)
THU, JAN 29 2009 15:50
230KV BUS VOLTS

2013 WINTER PEAK STORA MIN
NS-NB=0; NB-NE=500; CBX=732; ONI=961 ONS=851
3 PHASE FAULT ON L8003 AT ONSLOW
CLEARED IN 4.5 CYCLES: NO SPS
FILE: a07.2-3p_8003_67n-2013WP-NS-0.out
CHNL# 217: [L6533MW]
CHNL# 215: [L6503MW]
CHNL# 197: [L8003MW]
CHNL# 195: [L8004MW]
CHNL# 193: [L8001MW]
CHNL# 221: [L3001MW]
250.00
500.00
1000.0
0.0
-250.0
-1000.
TIME (SECONDS)
THU, JAN 29 2009 15:50
LINE FLOW MW

2013 WINTER PEAK STORA MIN
NS-NB=0; NB-NE=500; CBX=732; ONI=961 ONS=851
3 PHASE FAULT ON L8003 AT ONSLOW
CLEARED IN 4.5 CYCLES: NO SPS
FILE: a07.2-3p_8003_67n-2013WP-NS-0.out
CHNL# 154: [IR141-DIGBYH69.0 VOLTS]
CHNL# 153: [IR137-STATIG25.0 VOLTS]
CHNL# 152: [IR114-GLENDH138.0 VOLTS]
CHNL# 151: [IR84-DALHOHV230.0 VOLTS]
CHNL# 150: [IR82-NUTBHV69.0 VOLTS]
CHNL# 149: [IR45-AMHERTP138.0 VOLTS]
1.2000
0.70000
0.0
1.0000
2.0000
3.0000
4.0000
5.0000
6.0000
7.0000
8.0000
9.0000
10.000
TIME (SECONDS)
THU, JAN 29 2009 15:50
WIND BUS VOLTS

2013 WINTER PEAK STORA MIN
NS-NB=0; NB-NE=500; CBX=732; ONI=961 ONS=851
3 PHASE FAULT ON L8003 AT ONSLOW
CLEARED IN 4.5 CYCLES: SPS DROPS LINGAN 2
FILE: a07.2s-3p_8003_67n-2013WP-NS-0.out
CHNL# 20: [ANGL199169 [TUFTCV3 14.400] [3]] [ANGL156661 [DARL G1 22.000] [1
CHNL# 17: [ANGL199086 [TRENTON613.800] [6]] [ANGL156661 [DARL G1 22.000] [1
CHNL# 16: [ANGL199085 [TRENTN5 13.800] [5]] [ANGL156661 [DARL G1 22.000] [1
CHNL# 15: [ANGL199061 [TMP1 STO13.800] [1]] [ANGL156661 [DARL G1 22.000] [1
CHNL# 13: [ANGL199043 [ACONIG1 20.000] [1]] [ANGL156661 [DARL G1 22.000] [1
CHNL# 11: [ANGL199001 [LINGAN1 14.400] [1]] [ANGL156661 [DARL G1 22.000] [1
100.00
-100.0
0.0
1.0000
2.0000
3.0000
4.0000
5.0000
6.0000
7.0000
8.0000
9.0000
10.000
TIME (SECONDS)
THU, JAN 29 2009 15:50
NS ANGLE

2013 WINTER PEAK STORA MIN
NS-NB=0; NB-NE=500; CBX=732; ONI=961 ONS=851
3 PHASE FAULT ON L8003 AT ONSLOW
CLEARED IN 4.5 CYCLES: SPS DROPS LINGAN 2
FILE: a07.2s-3p_8003_67n-2013WP-NS-0.out
CHNL# 10: [ANGL190472 [BLLDNG2 19.000] [1]] [ANGL156661 [DARL G1 22.000] [1
CHNL# 6: [ANGL190456 [LEPRG1 26.000] [1]] [ANGL156661 [DARL G1 22.000] [1
CHNL# 5: [ANGL190450 [MACTG1 13.800] [1]] [ANGL156661 [DARL G1 22.000] [1
CHNL# 3: [ANGL126652 [RAV 3 22.000] [1]] [ANGL156661 [DARL G1 22.000] [1
CHNL# 2: [ANGL101063 [MYST G7 22.000] [1]] [ANGL156661 [DARL G1 22.000] [1
CHNL# 7: [ANGL190457 [C.CVG1 19.000] [1]] [ANGL156661 [DARL G1 22.000] [1
100.00
-100.0
0.0
1.0000
2.0000
3.0000
4.0000
5.0000
6.0000
7.0000
8.0000
9.0000
10.000
TIME (SECONDS)
THU, JAN 29 2009 15:50
"NE,NY,NB ANGLE"

2013 WINTER PEAK STORA MIN
NS-NB=0; NB-NE=500; CBX=732; ONI=961 ONS=851
3 PHASE FAULT ON L8003 AT ONSLOW
CLEARED IN 4.5 CYCLES: SPS DROPS LINGAN 2
FILE: a07.2s-3p_8003_67n-2013WP-NS-0.out
CHNL# 59: [POWR199169 [TUFTCV3 14.400] [3]]
CHNL# 56: [POWR199086 [TRENTON613.800] [6]]
CHNL# 55: [POWR199085 [TRENTN5 13.800] [5]]
CHNL# 54: [POWR199061 [TMP1 STO13.800] [1]]
CHNL# 52: [POWR199043 [ACONIG1 20.000] [1]]
CHNL# 50: [POWR199001 [LINGAN1 14.400] [1]]
2.5000
0.0
-1.500
1.0000
2.0000
3.0000
4.0000
5.0000
6.0000
7.0000
8.0000
9.0000
10.000
TIME (SECONDS)
THU, JAN 29 2009 15:50
NS MW

2013 WINTER PEAK STORA MIN
NS-NB=0; NB-NE=500; CBX=732; ONI=961 ONS=851
3 PHASE FAULT ON L8003 AT ONSLOW
CLEARED IN 4.5 CYCLES: SPS DROPS LINGAN 2
FILE: a07.2s-3p_8003_67n-2013WP-NS-0.out
CHNL# 49: [POWER190472 [BLLDNG2 19.000] [1]]
CHNL# 45: [POWER190456 [LEPRG1 26.000] [1]]
CHNL# 44: [POWER190450 [MACTG1 13.800] [1]]
CHNL# 42: [POWER126652 [RAV 3 22.000] [1]]
CHNL# 41: [POWER101063 [MYST G7 22.000] [1]]
CHNL# 46: [POWER190457 [C.CVG1 19.000] [1]]
7.0000
2.0000
4.0000
0.0
1.0000
5.0000
6.0000
7.0000
8.0000
9.0000
10.000
TIME (SECONDS)
THU, JAN 29 2009 15:50
"NE,NY,NB POWER"

2013 WINTER PEAK STORA MIN
NS-NB=0; NB-NE=500; CBX=732; ONI=961 ONS=851
3 PHASE FAULT ON L8003 AT ONSLOW
CLEARED IN 4.5 CYCLES: SPS DROPS LINGAN 2
FILE: a07.2s-3p_8003_67n-2013WP-NS-0.out
CHNL# 119: [VARS IR141-DIGBY]
CHNL# 118: [VARS IR137-STATIA]
CHNL# 117: [VARS IR114-GLENDHU]
CHNL# 116: [VARS IR84-DALHOUSIE]
CHNL# 115: [VARS IR82_NUTTBY]
CHNL# 114: [VARS IR45_AMHERST]
0.50000
-0.5000
0.0
1.0000
2.0000
3.0000
4.0000
5.0000
6.0000
7.0000
8.0000
9.0000
10.000
TIME (SECONDS)
THU, JAN 29 2009 15:50
NS WIND MV

2013 WINTER PEAK STORA MIN
NS-NB=0; NB-NE=500; CBX=732; ONI=961 ONS=851
3 PHASE FAULT ON L8003 AT ONSLOW
CLEARED IN 4.5 CYCLES: SPS DROPS LINGAN 2
FILE: a07.2s-3p_8003_67n-2013WP-NS-0.out
CHNL# 79: [POWER IR141-DIGBY]
CHNL# 78: [POWER IR137-STATIA]
CHNL# 77: [POWER IR114-GLENDHU]
CHNL# 76: [POWER IR84-DALHOUSIE]
CHNL# 75: [POWER IR82_NUTTBY]
CHNL# 74: [POWER IR45_AMHERST]
1.0000
0.0
0.0
1.0000
2.0000
3.0000
4.0000
5.0000
6.0000
7.0000
8.0000
9.0000
10.000
TIME (SECONDS)
THU, JAN 29 2009 15:50
NS WIND MW

2013 WINTER PEAK STORA MIN
NS-NB=0; NB-NE=500; CBX=732; ONI=961 ONS=851
3 PHASE FAULT ON L8003 AT ONSLOW
CLEARED IN 4.5 CYCLES: SPS DROPS LINGAN 2
FILE: a07.2s-3p_8003_67n-2013WP-NS-0.out
CHNL# 133: [VOLT199125 [ONSLOW 345.00]]
CHNL# 132: [VOLT199120 [HOPEWELL 345.00]]
CHNL# 131: [VOLT199045 [WOODBINE345.00]]
CHNL# 130: [VOLT190320 [SALBRY 345.00]]
CHNL# 128: [VOLT190004 [KESWICK 345.00]]
CHNL# 127: [VOLT 70002 [ORRINGTN345.00]]
1.1000
0.90000
0.0
1.0000
2.0000
3.0000
4.0000
5.0000
6.0000
7.0000
8.0000
9.0000
10.000
TIME (SECONDS)
THU, JAN 29 2009 15:50
"345KV VOLTAGE"

2013 WINTER PEAK STORA MIN
NS-NB=0; NB-NE=500; CBX=732; ONI=961 ONS=851
3 PHASE FAULT ON L8003 AT ONSLOW
CLEARED IN 4.5 CYCLES: SPS DROPS LINGAN 2
FILE: a07.2s-3p_8003_67n-2013WP-NS-0.out
CHNL# 125: [60*(1+[FREQ199125 [ONSLOW 345.00]])]
CHNL# 124: [60*(1+[FREQ199120 [HOPEWELL 345.00]])]
CHNL# 123: [60*(1+[FREQ199045 [WOODBINE345.00]])]
CHNL# 122: [60*(1+[FREQ190320 [SALBRY 345.00]])]
CHNL# 121: [60*(1+[FREQ190197 [C.COVE 345.00]])]
CHNL# 120: [60*(1+[FREQ 70002 [ORRINGTN345.00]])]
60.500
59.500
0.0
1.0000
2.0000
3.0000
4.0000
5.0000
6.0000
7.0000
8.0000
9.0000
10.000
TIME (SECONDS)
THU, JAN 29 2009 15:50
FREQUENCY HZ

2013 WINTER PEAK STORA MIN
NS-NB=0; NB-NE=500; CBX=732; ONI=961 ONS=851
3 PHASE FAULT ON L8003 AT ONSLOW
CLEARED IN 4.5 CYCLES: SPS DROPS LINGAN 2
FILE: a07.2s-3p_8003_67n-2013WP-NS-0.out
CHNL# 146: [VOLT199280 [TUSKET A138.00]]
CHNL# 145: [VOLT199193 [HHWAS 138.00]]
CHNL# 144: [VOLT199165 [TUFTCOVE138.00]]
CHNL# 143: [VOLT199138 [SPRNGHILL138.00]]
CHNL# 142: [VOLT199090 [50N-TREN138.00]]
CHNL# 141: [VOLT199051 [HASTINGS138.00]]
1.2000
0.70000
0.0
1.0000
2.0000
3.0000
4.0000
5.0000
6.0000
7.0000
8.0000
9.0000
10.000
TIME (SECONDS)
THU, JAN 29 2009 15:50
138KV BUS VOLTS

2013 WINTER PEAK STORA MIN
NS-NB=0; NB-NE=500; CBX=732; ONI=961 ONS=851
3 PHASE FAULT ON L8003 AT ONSLOW
CLEARED IN 4.5 CYCLES: SPS DROPS LINGAN 2
FILE: a07.2s-3p_8003_67n-2013WP-NS-0.out
CHNL# 140: [VOLT199240 [BWATER A230.00]]
CHNL# 139: [VOLT199200 [BRUSHY 230.00]]
CHNL# 138: [VOLT199130 [ONSLOW 230.00]]
CHNL# 137: [VOLT199050 [HASTINGS230.00]]
CHNL# 136: [VOLT199044 [PT.ACONI230.00]]
CHNL# 135: [VOLT199000 [LINGAN 230.00]]
1.2000
0.70000
0.0
1.0000
2.0000
3.0000
4.0000
5.0000
6.0000
7.0000
8.0000
9.0000
10.000
TIME (SECONDS)
THU, JAN 29 2009 15:50
230KV BUS VOLTS

2013 WINTER PEAK STORA MIN
NS-NB=0; NB-NE=500; CBX=732; ONI=961 ONS=851
3 PHASE FAULT ON L8003 AT ONSLOW
CLEARED IN 4.5 CYCLES: SPS DROPS LINGAN 2
FILE: a07.2s-3p_8003_67n-2013WP-NS-0.out
CHNL# 217: [L6513MW]
CHNL# 215: [L6503MW]
CHNL# 197: [L8003MW]
CHNL# 195: [L8004MW]
CHNL# 193: [L8001MW]
CHNL# 221: [L3001MW]
250.00
500.00
1000.0
0.0
-250.0
-1000.
0.70000
0.0
1.0000
2.0000
3.0000
4.0000
5.0000
6.0000
7.0000
8.0000
9.0000
10.000
TIME (SECONDS)
THU, JAN 29 2009 15:50
LINE FLOW MW

2013 WINTER PEAK STORA MIN
NS-NB=0; NB-NE=500; CBX=732; ONI=961 ONS=851
3 PHASE FAULT ON L8003 AT ONSLOW
CLEARED IN 4.5 CYCLES: SPS DROPS LINGAN 2
FILE: a07.2s-3p_8003_67n-2013WP-NS-0.out
CHNL# 154: [IR141-DIGBYH69.0 VOLTS]
CHNL# 153: [IR137-STATIG25.0 VOLTS]
CHNL# 152: [IR114-GLENDH138.0 VOLTS]
CHNL# 151: [IR84-DALHOHV230.0 VOLTS]
CHNL# 150: [IR82_NUTBHV69.0 VOLTS]
CHNL# 149: [IR45_AMHERTP138.0 VOLTS]
1.2000
0.70000
0.0
1.0000
2.0000
3.0000
4.0000
5.0000
6.0000
7.0000
8.0000
9.0000
10.000
TIME (SECONDS)
THU, JAN 29 2009 15:50
WIND BUS VOLTS

2013 WINTER PEAK STORA MIN
NS-NB=0; NB-NE=500; CBX=732; ONI=961 ONS=851
3 PHASE FAULT ON L8002 AT ONSLOW
CLEARED IN 4.5 CYCLES; NO SPS
FILE: a08-3p_8002_67n-2013WP-NS-0.out
CHNL#S 20.4: [ANGL199169 [TUFTCV3 14.400] [3]] [ANGL156661 [DARL G1 22.000] [1
CHNL#S 17.4: [ANGL199086 [TRENTON613.800] [6]] [ANGL156661 [DARL G1 22.000] [1
CHNL#S 16.4: [ANGL199085 [TRENTN5 13.800] [5]] [ANGL156661 [DARL G1 22.000] [1
CHNL#S 15.4: [ANGL199061 [TMP1 STO13.800] [1]] [ANGL156661 [DARL G1 22.000] [1
CHNL#S 13.4: [ANGL199043 [ACONIG1 20.000] [1]] [ANGL156661 [DARL G1 22.000] [1
CHNL#S 11.4: [ANGL199001 [LINGAN1 14.400] [1]] [ANGL156661 [DARL G1 22.000] [1
100.00
-100.0
50.000
-150.0
0.0
1.0000
2.0000
3.0000
4.0000
5.0000
6.0000
7.0000
8.0000
9.0000
10.000
TIME (SECONDS)
THU, JAN 29 2009 15:50
NS ANGLE

2013 WINTER PEAK STORA MIN
NS-NB=0; NB-NE=500; CBX=732; ONI=961 ONS=851
3 PHASE FAULT ON L8002 AT ONSLOW
CLEARED IN 4.5 CYCLES; NO SPS
FILE: a08-3p_8002_67n-2013WP-NS-0.out
CHNL#S 10.4: [ANGL190472 [BLLDNG2 19.000] [1]] [ANGL156661 [DARL G1 22.000] [1
CHNL#S 6.4: [ANGL190456 [LEPRG1 26.000] [1]] [ANGL156661 [DARL G1 22.000] [1
CHNL#S 5.4: [ANGL190450 [MACTG1 13.800] [1]] [ANGL156661 [DARL G1 22.000] [1
CHNL#S 3.4: [ANGL126652 [RAV 3 22.000] [1]] [ANGL156661 [DARL G1 22.000] [1
CHNL#S 2.4: [ANGL101063 [MYST G7 22.000] [1]] [ANGL156661 [DARL G1 22.000] [1
CHNL#S 7.4: [ANGL190457 [C.CVG1 19.000] [1]] [ANGL156661 [DARL G1 22.000] [1
100.00
-100.0
0.0
1.0000
2.0000
3.0000
4.0000
5.0000
6.0000
7.0000
8.0000
9.0000
10.000
TIME (SECONDS)
THU, JAN 29 2009 15:50
"NE,NY,NB ANGLE"

2013 WINTER PEAK STORA MIN
NS-NB=0; NB-NE=500; CBX=732; ONI=961 ONS=851
3 PHASE FAULT ON L8002 AT ONSLOW
CLEARED IN 4.5 CYCLES; NO SPS
FILE: a08-3p_8002_67n-2013WP-NS-0.out
CHNL# 59: [POWER199169 [TUFTCV3 14.400] [3]]
CHNL# 56: [POWER199086 [TRENTON613.800] [6]]
CHNL# 55: [POWER199085 [TRENTN5 13.800] [5]]
CHNL# 54: [POWER199061 [TMP1 STO13.800] [1]]
CHNL# 52: [POWER199043 [ACONIG1 20.000] [1]]
CHNL# 50: [POWER199001 [LINGAN1 14.400] [1]]
2.5000
0.0
1.0000
-1.500
2.0000
3.0000
4.0000
5.0000
6.0000
7.0000
8.0000
9.0000
10.000
TIME (SECONDS)
THU, JAN 29 2009 15:50
NS MW

2013 WINTER PEAK STORA MIN
NS-NB=0; NB-NE=500; CBX=732; ONI=961 ONS=851
3 PHASE FAULT ON L8002 AT ONSLOW
CLEARED IN 4.5 CYCLES; NO SPS
FILE: a08-3p_8002_67n-2013WP-NS-0.out
CHNL# 49: [POWER190472 [BLLDNG2 19.000] [1]]
CHNL# 45: [POWER190456 [LEPRG1 26.000] [1]]
CHNL# 44: [POWER190450 [MACTG1 13.800] [1]]
CHNL# 42: [POWER126652 [RAV 3 22.000] [1]]
CHNL# 41: [POWER101063 [MYST G7 22.000] [1]]
CHNL# 46: [POWER190457 [C.CVG1 19.000] [1]]
7.0000
2.0000
9.0000
4.0000
5.0000
0.0
6.5000
1.0000
5.0000
0.0
1.0000
2.0000
3.0000
4.0000
5.0000
6.0000
7.0000
8.0000
9.0000
10.000
TIME (SECONDS)
THU, JAN 29 2009 15:50
"NE,NY,NB POWER"

2013 WINTER PEAK STORA MIN
NS-NB=0; NB-NE=500; CBX=732; ONI=961 ONS=851
3 PHASE FAULT ON L8002 AT ONSLOW
CLEARED IN 4.5 CYCLES: NO SPS
FILE: a08-3p_8002_67n-2013WP-NS-0.out
CHNL# 119: [VARS IR141-DIGBY]
CHNL# 118: [VARS IR137-STATIA]
CHNL# 117: [VARS IR114-GLENDHU]
CHNL# 116: [VARS IR84-DALHOUSIE]
CHNL# 115: [VARS IR82_NUTTBY]
CHNL# 114: [VARS IR45_AMHERST]
0.50000
-0.5000
0.0
1.0000
2.0000
3.0000
4.0000
5.0000
6.0000
7.0000
8.0000
9.0000
10.000
TIME (SECONDS)
THU, JAN 29 2009 15:50
NS WIND MV

2013 WINTER PEAK STORA MIN
NS-NB=0; NB-NE=500; CBX=732; ONI=961 ONS=851
3 PHASE FAULT ON L8002 AT ONSLOW
CLEARED IN 4.5 CYCLES: NO SPS
FILE: a08-3p_8002_67n-2013WP-NS-0.out
CHNL# 79: [POWER IR141-DIGBY]
CHNL# 78: [POWER IR137-STATIA]
CHNL# 77: [POWER IR114-GLENDHU]
CHNL# 76: [POWER IR84-DALHOUSIE]
CHNL# 75: [POWER IR82_NUTTBY]
CHNL# 74: [POWER IR45_AMHERST]
1.0000
0.0
1.0000
2.0000
3.0000
4.0000
5.0000
6.0000
7.0000
8.0000
9.0000
10.000
TIME (SECONDS)
THU, JAN 29 2009 15:50
NS WIND MW

2013 WINTER PEAK STORA MIN
NS-NB=0; NB-NE=500; CBX=732; ONI=961 ONS=851
3 PHASE FAULT ON L8002 AT ONSLOW
CLEARED IN 4.5 CYCLES: NO SPS
FILE: a08-3p_8002_67n-2013WP-NS-0.out
CHNL# 133: [VOLT199125 [ONSLOW 345.00]]
CHNL# 132: [VOLT199120 [HOPEWELL 345.00]]
CHNL# 131: [VOLT199045 [WOODBINE345.00]]
CHNL# 130: [VOLT190320 [SALBRY 345.00]]
CHNL# 128: [VOLT190004 [KESWICK 345.00]]
CHNL# 127: [VOLT 70002 [ORRINGTN345.00]]
1.1000
0.90000
0.0
1.0000
2.0000
3.0000
4.0000
5.0000
6.0000
7.0000
8.0000
9.0000
10.000
TIME (SECONDS)
THU, JAN 29 2009 15:50
"345KV VOLTAGE"

2013 WINTER PEAK STORA MIN
NS-NB=0; NB-NE=500; CBX=732; ONI=961 ONS=851
3 PHASE FAULT ON L8002 AT ONSLOW
CLEARED IN 4.5 CYCLES: NO SPS
FILE: a08-3p_8002_67n-2013WP-NS-0.out
CHNL# 125: 60*(1+[FREQ199125 [ONSLOW 345.00]])
CHNL# 124: 60*(1+[FREQ199120 [HOPEWELL 345.00]])
CHNL# 123: 60*(1+[FREQ199045 [WOODBINE345.00]])
CHNL# 122: 60*(1+[FREQ190320 [SALBRY 345.00]])
CHNL# 121: 60*(1+[FREQ190197 [C.COVE 345.00]])
CHNL# 120: 60*(1+[FREQ 70002 [ORRINGTN345.00]])
60.500
59.500
0.0
1.0000
2.0000
3.0000
4.0000
5.0000
6.0000
7.0000
8.0000
9.0000
10.000
TIME (SECONDS)
THU, JAN 29 2009 15:50
FREQUENCY HZ

2013 WINTER PEAK STORA MIN
NS-NB=0; NB-NE=500; CBX=732; ONI=961 ONS=851
3 PHASE FAULT ON L8002 AT ONSLOW
CLEARED IN 4.5 CYCLES: NO SPS
FILE: a08-3p_8002_67n-2013WP-NS-0.out
CHNL# 146: [VOLT199280 [TUSKET A138.00]]
CHNL# 145: [VOLT199193 [HHWAS 138.00]]
CHNL# 144: [VOLT199165 [TUFTCOVE138.00]]
CHNL# 143: [VOLT199135 [SPRNGHILL138.00]]
CHNL# 142: [VOLT199090 [SON-TREN138.00]]
CHNL# 141: [VOLT199051 [HASTINGS138.00]]
1.2000
0.70000
0.0
1.0000
2.0000
3.0000
4.0000
5.0000
6.0000
7.0000
8.0000
9.0000
10.000
TIME (SECONDS)
THU, JAN 29 2009 15:50
138KV BUS VOLTS

2013 WINTER PEAK STORA MIN
NS-NB=0; NB-NE=500; CBX=732; ONI=961 ONS=851
3 PHASE FAULT ON L8002 AT ONSLOW
CLEARED IN 4.5 CYCLES: NO SPS
FILE: a08-3p_8002_67n-2013WP-NS-0.out
CHNL# 140: [VOLT199240 [BWATER A230.00]]
CHNL# 139: [VOLT199200 [BRUSHY 230.00]]
CHNL# 138: [VOLT199130 [ONSLOW 230.00]]
CHNL# 137: [VOLT199050 [HASTINGS230.00]]
CHNL# 136: [VOLT199044 [PT.ACONI230.00]]
CHNL# 135: [VOLT199000 [LINGAN 230.00]]
1.2000
0.70000
0.0
1.0000
2.0000
3.0000
4.0000
5.0000
6.0000
7.0000
8.0000
9.0000
10.000
TIME (SECONDS)
THU, JAN 29 2009 15:50
230KV BUS VOLTS

2013 WINTER PEAK STORA MIN
NS-NB=0; NB-NE=500; CBX=732; ONI=961 ONS=851
3 PHASE FAULT ON L8002 AT ONSLOW
CLEARED IN 4.5 CYCLES: NO SPS
FILE: a08-3p_8002_67n-2013WP-NS-0.out
CHNL# 217: [L6533MW]
CHNL# 215: [L6503MW]
CHNL# 197: [L8003MW]
CHNL# 195: [L8004MW]
CHNL# 193: [L8001MW]
CHNL# 221: [L3001MW]
250.00
500.00
1000.0
0.0
-250.0
-1000.
0.0
1.0000
2.0000
3.0000
4.0000
5.0000
6.0000
7.0000
8.0000
9.0000
10.000
TIME (SECONDS)
THU, JAN 29 2009 15:50
LINE FLOW MW

2013 WINTER PEAK STORA MIN
NS-NB=0; NB-NE=500; CBX=732; ONI=961 ONS=851
3 PHASE FAULT ON L8002 AT ONSLOW
CLEARED IN 4.5 CYCLES: NO SPS
FILE: a08-3p_8002_67n-2013WP-NS-0.out
CHNL# 154: [IR141-DIGBYH69.0 VOLTS]
CHNL# 153: [IR137-STATIG25.0 VOLTS]
CHNL# 152: [IR114-GLENDH138.0 VOLTS]
CHNL# 151: [IR84-DALHOHV230.0 VOLTS]
CHNL# 150: [IR82_NUTBHV69.0 VOLTS]
CHNL# 149: [IR45_AMHERTP138.0 VOLTS]
1.2000
0.70000
0.0
1.0000
2.0000
3.0000
4.0000
5.0000
6.0000
7.0000
8.0000
9.0000
10.000
TIME (SECONDS)
THU, JAN 29 2009 15:50
WIND BUS VOLTS

2013 WINTER PEAK STORA MIN
NS-NB=0; NB-NE=500; CBX=732; ONI=961 ONS=851
3 PHASE FAULT ON L8001 AT ONSLOW
CLEARED IN 4.5 CYCLES: NO SPS
FILE: a09-3p_8001_67n-2013WP-NS-0.out
CHNL#S 20.4: [ANGL199169 [TUFTCV3 14.400] [3]] [ANGL156661 [DARL G1 22.000] [1]
CHNL#S 17.4: [ANGL199086 [TRENTON613.800] [6]] [ANGL156661 [DARL G1 22.000] [1]
CHNL#S 16.4: [ANGL199085 [TRENTN5 13.800] [5]] [ANGL156661 [DARL G1 22.000] [1]
CHNL#S 15.4: [ANGL199061 [TMP1 STO13.800] [1]] [ANGL156661 [DARL G1 22.000] [1]
CHNL#S 13.4: [ANGL199043 [ACONIG1 20.000] [1]] [ANGL156661 [DARL G1 22.000] [1]
CHNL#S 11.4: [ANGL199001 [LINGAN1 14.400] [1]] [ANGL156661 [DARL G1 22.000] [1]
100.00
-100.0
50.000
-150.0
0.0
1.0000
2.0000
3.0000
4.0000
5.0000
6.0000
7.0000
8.0000
9.0000
10.000
TIME (SECONDS)
THU, JAN 29 2009 15:50
NS ANGLE

2013 WINTER PEAK STORA MIN
NS-NB=0; NB-NE=500; CBX=732; ONI=961 ONS=851
3 PHASE FAULT ON L8001 AT ONSLOW
CLEARED IN 4.5 CYCLES: NO SPS
FILE: a09-3p_8001_67n-2013WP-NS-0.out
CHNL#S 10.4: [ANGL190472 [BLLDNG2 19.000] [1]] [ANGL156661 [DARL G1 22.000] [1]
CHNL#S 6.4: [ANGL190456 [LEPRG1 26.000] [1]] [ANGL156661 [DARL G1 22.000] [1]
CHNL#S 5.4: [ANGL190450 [MACTG1 13.800] [1]] [ANGL156661 [DARL G1 22.000] [1]
CHNL#S 3.4: [ANGL126652 [RAV 3 22.000] [1]] [ANGL156661 [DARL G1 22.000] [1]
CHNL#S 2.4: [ANGL101063 [MYST G7 22.000] [1]] [ANGL156661 [DARL G1 22.000] [1]
CHNL#S 7.4: [ANGL190457 [C.CVG1 19.000] [1]] [ANGL156661 [DARL G1 22.000] [1]
100.00
-100.0
0.0
1.0000
2.0000
3.0000
4.0000
5.0000
6.0000
7.0000
8.0000
9.0000
10.000
TIME (SECONDS)
THU, JAN 29 2009 15:50
"NE,NY,NB ANGLE"

2013 WINTER PEAK STORA MIN
NS-NB=0; NB-NE=500; CBX=732; ONI=961 ONS=851
3 PHASE FAULT ON L8001 AT ONSLOW
CLEARED IN 4.5 CYCLES: NO SPS
FILE: a09-3p_8001_67n-2013WP-NS-0.out
CHNL# 59: [POWER199169 [TUFTCV3 14.400] [3]]
CHNL# 56: [POWER199086 [TRENTON613.800] [6]]
CHNL# 55: [POWER199085 [TRENTN5 13.800] [5]]
CHNL# 54: [POWER199061 [TMP1 STO13.800] [1]]
CHNL# 52: [POWER199043 [ACONIG1 20.000] [1]]
CHNL# 50: [POWER199001 [LINGAN1 14.400] [1]]
2.5000
0.0
1.0000
-1.500
2.0000
3.0000
4.0000
5.0000
6.0000
7.0000
8.0000
9.0000
10.000
TIME (SECONDS)
THU, JAN 29 2009 15:50
NS MW

2013 WINTER PEAK STORA MIN
NS-NB=0; NB-NE=500; CBX=732; ONI=961 ONS=851
3 PHASE FAULT ON L8001 AT ONSLOW
CLEARED IN 4.5 CYCLES: NO SPS
FILE: a09-3p_8001_67n-2013WP-NS-0.out
CHNL# 49: [POWER190472 [BLLDNG2 19.000] [1]]
CHNL# 45: [POWER190456 [LEPRG1 26.000] [1]]
CHNL# 44: [POWER190450 [MACTG1 13.800] [1]]
CHNL# 42: [POWER126652 [RAV 3 22.000] [1]]
CHNL# 41: [POWER101063 [MYST G7 22.000] [1]]
CHNL# 46: [POWER190457 [C.CVG1 19.000] [1]]
7.0000
2.0000
9.0000
4.0000
5.0000
0.0
6.5000
1.0000
5.0000
0.0
1.0000
2.0000
3.0000
4.0000
5.0000
6.0000
7.0000
8.0000
9.0000
10.000
TIME (SECONDS)
THU, JAN 29 2009 15:50
"NE,NY,NB POWER"

2013 WINTER PEAK STORA MIN
NS-NB=0; NB-NE=500; CBX=732; ONI=961 ONS=851
3 PHASE FAULT ON L8001 AT ONSLOW
CLEARED IN 4.5 CYCLES: NO SPS
FILE: a09-3p_8001_67n-2013WP-NS-0.out
CHNL# 114: [VARS IR45_AMHERST]
CHNL# 115: [VARS IR82_NUTTBY]
CHNL# 116: [VARS IR84-DALHOUSIE]
CHNL# 117: [VARS IR114-GLENDHU]
CHNL# 118: [VARS IR137-STATIA]
CHNL# 119: [VARS IR141-DIGBY]
0.50000
-0.5000
TIME (SECONDS)
THU, JAN 29 2009 15:50
NS WIND MV

2013 WINTER PEAK STORA MIN
NS-NB=0; NB-NE=500; CBX=732; ONI=961 ONS=851
3 PHASE FAULT ON L8001 AT ONSLOW
CLEARED IN 4.5 CYCLES: NO SPS
FILE: a09-3p_8001_67n-2013WP-NS-0.out
CHNL# 74: [POWER IR45_AMHERST]
CHNL# 75: [POWER IR82_NUTTBY]
CHNL# 76: [POWER IR84-DALHOUSIE]
CHNL# 77: [POWER IR114-GLENDHU]
CHNL# 78: [POWER IR137-STATIA]
CHNL# 79: [POWER IR141-DIGBY]
1.0000
0.0
TIME (SECONDS)
THU, JAN 29 2009 15:50
NS WIND MW

2013 WINTER PEAK STORA MIN
NS-NB=0; NB-NE=500; CBX=732; ONI=961 ONS=851
3 PHASE FAULT ON L8001 AT ONSLOW
CLEARED IN 4.5 CYCLES: NO SPS
FILE: a09-3p_8001_67n-2013WP-NS-0.out
CHNL# 127: [VOLT 70002 [ORRINGTN345.00]]
CHNL# 128: [VOLT190004 [KESWICK 345.00]]
CHNL# 130: [VOLT190320 [SALBRY 345.00]]
CHNL# 131: [VOLT199045 [WOODBINE345.00]]
CHNL# 132: [VOLT199120 [HOPEWELL345.00]]
CHNL# 133: [VOLT199125 [ONSLOW 345.00]]
1.1000
0.90000
TIME (SECONDS)
THU, JAN 29 2009 15:50
"345KV VOLTAGE"

2013 WINTER PEAK STORA MIN
NS-NB=0; NB-NE=500; CBX=732; ONI=961 ONS=851
3 PHASE FAULT ON L8001 AT ONSLOW
CLEARED IN 4.5 CYCLES: NO SPS
FILE: a09-3p_8001_67n-2013WP-NS-0.out
CHNL# 120: 60*(1+[FREQ 70002 [ORRINGTN345.00]])
CHNL# 121: 60*(1+[FREQ190197 [C.COVE 345.00]])
CHNL# 122: 60*(1+[FREQ190320 [SALBRY 345.00]])
CHNL# 123: 60*(1+[FREQ199045 [WOODBINE345.00]])
CHNL# 124: 60*(1+[FREQ199120 [HOPEWELL345.00]])
CHNL# 125: 60*(1+[FREQ199125 [ONSLOW 345.00]])
60.500
59.500
TIME (SECONDS)
THU, JAN 29 2009 15:50
FREQUENCY HZ

2013 WINTER PEAK STORA MIN
NS-NB=0; NB-NE=500; CBX=732; ONI=961 ONS=851
3 PHASE FAULT ON L8001 AT ONSLOW
CLEARED IN 4.5 CYCLES: NO SPS
FILE: a09-3p_8001_67n-2013WP-NS-0.out
CHNL# 146: [VOLT199280 [TUSKET A138.00]]
CHNL# 145: [VOLT199193 [HHWAS 138.00]]
CHNL# 144: [VOLT199165 [TUFTCOVE138.00]]
CHNL# 143: [VOLT199135 [SPRNGHILL138.00]]
CHNL# 142: [VOLT199090 [SON-TREN138.00]]
CHNL# 141: [VOLT199051 [HASTINGS138.00]]
1.2000
0.70000
0.0
1.0000
2.0000
3.0000
4.0000
5.0000
6.0000
7.0000
8.0000
9.0000
10.000
TIME (SECONDS)
THU, JAN 29 2009 15:50
138KV BUS VOLTS

2013 WINTER PEAK STORA MIN
NS-NB=0; NB-NE=500; CBX=732; ONI=961 ONS=851
3 PHASE FAULT ON L8001 AT ONSLOW
CLEARED IN 4.5 CYCLES: NO SPS
FILE: a09-3p_8001_67n-2013WP-NS-0.out
CHNL# 140: [VOLT199240 [BWATER A230.00]]
CHNL# 139: [VOLT199200 [BRUSHY 230.00]]
CHNL# 138: [VOLT199130 [ONSLOW 230.00]]
CHNL# 137: [VOLT199050 [HASTINGS230.00]]
CHNL# 136: [VOLT199044 [PT.ACONI230.00]]
CHNL# 135: [VOLT199000 [LINGAN 230.00]]
1.2000
0.70000
0.0
1.0000
2.0000
3.0000
4.0000
5.0000
6.0000
7.0000
8.0000
9.0000
10.000
TIME (SECONDS)
THU, JAN 29 2009 15:50
230KV BUS VOLTS

2013 WINTER PEAK STORA MIN
NS-NB=0; NB-NE=500; CBX=732; ONI=961 ONS=851
3 PHASE FAULT ON L8001 AT ONSLOW
CLEARED IN 4.5 CYCLES: NO SPS
FILE: a09-3p_8001_67n-2013WP-NS-0.out
CHNL# 217: [L6533MW]
CHNL# 215: [L6503MW]
CHNL# 197: [L8003MW]
CHNL# 195: [L8004MW]
CHNL# 193: [L8001MW]
CHNL# 221: [L3001MW]
250.00
500.00
1000.0
0.0
-250.0
-1000.
TIME (SECONDS)
THU, JAN 29 2009 15:50
LINE FLOW MW

2013 WINTER PEAK STORA MIN
NS-NB=0; NB-NE=500; CBX=732; ONI=961 ONS=851
3 PHASE FAULT ON L8001 AT ONSLOW
CLEARED IN 4.5 CYCLES: NO SPS
FILE: a09-3p_8001_67n-2013WP-NS-0.out
CHNL# 154: [IR141-DIGBYH69.0 VOLTS]
CHNL# 153: [IR137-STATIG25.0 VOLTS]
CHNL# 152: [IR114-GLENDH138.0 VOLTS]
CHNL# 151: [IR84-DALHOHV230.0 VOLTS]
CHNL# 150: [IR82_NUTBHV69.0 VOLTS]
CHNL# 149: [IR45_AMHERTP138.0 VOLTS]
1.2000
0.70000
0.0
1.0000
2.0000
3.0000
4.0000
5.0000
6.0000
7.0000
8.0000
9.0000
10.000
TIME (SECONDS)
THU, JAN 29 2009 15:50
WIND BUS VOLTS

2013 WINTER PEAK STORA MIN
NS-NB=0; NB-NE=500; CBX=732; ONI=961 ONS=851
3 PHASE FAULT ON L6503 AT TRENTON
CLEARED IN 5 CYCLES: NO SPS
FILE: a10-3p_6503_50n-2013WP-NS-0.out
CHNL#S 20.4: [ANGL199169 [TUFTCV3 14.400] [3]] [ANGL156661 [DARL G1 22.000] [1
CHNL#S 17.4: [ANGL199086 [TRENTON613.800] [6]] [ANGL156661 [DARL G1 22.000] [1
CHNL#S 16.4: [ANGL199085 [TRENTN5 13.800] [5]] [ANGL156661 [DARL G1 22.000] [1
CHNL#S 15.4: [ANGL199061 [TMP1 STO13.800] [1]] [ANGL156661 [DARL G1 22.000] [1
CHNL#S 13.4: [ANGL199043 [ACONIG1 20.000] [1]] [ANGL156661 [DARL G1 22.000] [1
CHNL#S 11.4: [ANGL199001 [LINGAN1 14.400] [1]] [ANGL156661 [DARL G1 22.000] [1
TIME (SECONDS)
THU, JAN 29 2009 15:50
NS ANGLE

2013 WINTER PEAK STORA MIN
NS-NB=0; NB-NE=500; CBX=732; ONI=961 ONS=851
3 PHASE FAULT ON L6503 AT TRENTON
CLEARED IN 5 CYCLES: NO SPS
FILE: a10-3p_6503_50n-2013WP-NS-0.out
CHNL#S 10.4: [ANGL190472 [BLLDNG2 19.000] [1]] [ANGL156661 [DARL G1 22.000] [1
CHNL#S 6.4: [ANGL190456 [LEPRG1 26.000] [1]] [ANGL156661 [DARL G1 22.000] [1
CHNL#S 5.4: [ANGL190450 [MACTG1 13.800] [1]] [ANGL156661 [DARL G1 22.000] [1
CHNL#S 3.4: [ANGL126652 [RAV 3 22.000] [1]] [ANGL156661 [DARL G1 22.000] [1
CHNL#S 2.4: [ANGL101063 [MYST G7 22.000] [1]] [ANGL156661 [DARL G1 22.000] [1
CHNL#S 1.7.4: [ANGL190457 [C.CVG1 19.000] [1]] [ANGL156661 [DARL G1 22.000] [1
TIME (SECONDS)
THU, JAN 29 2009 15:50
"NE,NY,NB ANGLE"

2013 WINTER PEAK STORA MIN
NS-NB=0; NB-NE=500; CBX=732; ONI=961 ONS=851
3 PHASE FAULT ON L6503 AT TRENTON
CLEARED IN 5 CYCLES: NO SPS
FILE: a10-3p_6503_50n-2013WP-NS-0.out
CHNL# 59: [POWER199169 [TUFTCV3 14.400] [3]]
CHNL# 56: [POWER199086 [TRENTON613.800] [6]]
CHNL# 55: [POWER199085 [TRENTN5 13.800] [5]]
CHNL# 54: [POWER199061 [TMP1 STO13.800] [1]]
CHNL# 52: [POWER199043 [ACONIG1 20.000] [1]]
CHNL# 50: [POWER199001 [LINGAN1 14.400] [1]]
TIME (SECONDS)
THU, JAN 29 2009 15:50
NS MW

2013 WINTER PEAK STORA MIN
NS-NB=0; NB-NE=500; CBX=732; ONI=961 ONS=851
3 PHASE FAULT ON L6503 AT TRENTON
CLEARED IN 5 CYCLES: NO SPS
FILE: a10-3p_6503_50n-2013WP-NS-0.out
CHNL# 49: [POWER190472 [BLLDNG2 19.000] [1]]
CHNL# 45: [POWER190456 [LEPRG1 26.000] [1]]
CHNL# 44: [POWER190450 [MACTG1 13.800] [1]]
CHNL# 42: [POWER126652 [RAV 3 22.000] [1]]
CHNL# 41: [POWER101063 [MYST G7 22.000] [1]]
CHNL# 46: [POWER190457 [C.CVG1 19.000] [1]]
TIME (SECONDS)
THU, JAN 29 2009 15:50
"NE,NY,NB POWER"

2013 WINTER PEAK STORA MIN
NS-NB=0; NB-NE=500; CBX=732; ONI=961 ONS=851
3 PHASE FAULT ON L6503 AT TRENTON
CLEARED IN 5 CYCLES: NO SPS
FILE: a10-3p_6503_50n-2013WP-NS-0.out
CHNL# 119: [VARS IR141-DIGBY]
CHNL# 118: [VARS IR137-STATIA]
CHNL# 117: [VARS IR114-GLENDHU]
CHNL# 116: [VARS IR84-DALHOUSIE]
CHNL# 115: [VARS IR82_NUTTBY]
CHNL# 114: [VARS IR45_AMHERST]
TIME (SECONDS)
THU, JAN 29 2009 15:50
NS WIND MV

2013 WINTER PEAK STORA MIN
NS-NB=0; NB-NE=500; CBX=732; ONI=961 ONS=851
3 PHASE FAULT ON L6503 AT TRENTON
CLEARED IN 5 CYCLES: NO SPS
FILE: a10-3p_6503_50n-2013WP-NS-0.out
CHNL# 79: [POWER IR141-DIGBY]
CHNL# 78: [POWER IR137-STATIA]
CHNL# 77: [POWER IR114-GLENDHU]
CHNL# 76: [POWER IR84-DALHOUSIE]
CHNL# 75: [POWER IR82_NUTTBY]
CHNL# 74: [POWER IR45_AMHERST]
TIME (SECONDS)
THU, JAN 29 2009 15:50
NS WIND MW

2013 WINTER PEAK STORA MIN
NS-NB=0; NB-NE=500; CBX=732; ONI=961 ONS=851
3 PHASE FAULT ON L6503 AT TRENTON
CLEARED IN 5 CYCLES: NO SPS
FILE: a10-3p_6503_50n-2013WP-NS-0.out
CHNL# 133: [VOLT199125 [ONSLOW 345.00]]
CHNL# 132: [VOLT199120 [HOPEWELL 345.00]]
CHNL# 131: [VOLT199045 [WOODBINE345.00]]
CHNL# 130: [VOLT190320 [SALBRY 345.00]]
CHNL# 128: [VOLT190004 [KESWICK 345.00]]
CHNL# 127: [VOLT 70002 [ORRINGTN345.00]]
TIME (SECONDS)
THU, JAN 29 2009 15:50
"345KV VOLTAGE"

2013 WINTER PEAK STORA MIN
NS-NB=0; NB-NE=500; CBX=732; ONI=961 ONS=851
3 PHASE FAULT ON L6503 AT TRENTON
CLEARED IN 5 CYCLES: NO SPS
FILE: a10-3p_6503_50n-2013WP-NS-0.out
CHNL# 125: 60*(1+[FREQ199125 [ONSLOW 345.00]])
CHNL# 124: 60*(1+[FREQ199120 [HOPEWELL 345.00]])
CHNL# 123: 60*(1+[FREQ199045 [WOODBINE345.00]])
CHNL# 122: 60*(1+[FREQ190320 [SALBRY 345.00]])
CHNL# 121: 60*(1+[FREQ190197 [C.COVE 345.00]])
CHNL# 120: 60*(1+[FREQ 70002 [ORRINGTN345.00]])
TIME (SECONDS)
THU, JAN 29 2009 15:50
FREQUENCY HZ

2013 WINTER PEAK STORA MIN
NS-NB=0; NB-NE=500; CBX=732; ONI=961 ONS=851
3 PHASE FAULT ON L6503 AT TRENTON
CLEARED IN 5 CYCLES: NO SPS
FILE: a10-3p_6503_50n-2013WP-NS-0.out
CHNL# 146: [VOLT199280 [TUSKET A138.00]]
CHNL# 145: [VOLT199193 [HHWAS 138.00]]
CHNL# 144: [VOLT199165 [TUFTCOVE138.00]]
CHNL# 143: [VOLT199135 [SPRNGHILL138.00]]
CHNL# 142: [VOLT199090 [50N-TREN138.00]]
CHNL# 141: [VOLT199051 [HASTINGS138.00]]
1.2000
0.70000
0.0
1.0000
2.0000
3.0000
4.0000
5.0000
6.0000
7.0000
8.0000
9.0000
10.000
TIME (SECONDS)
THU, JAN 29 2009 15:50
138KV BUS VOLTS

2013 WINTER PEAK STORA MIN
NS-NB=0; NB-NE=500; CBX=732; ONI=961 ONS=851
3 PHASE FAULT ON L6503 AT TRENTON
CLEARED IN 5 CYCLES: NO SPS
FILE: a10-3p_6503_50n-2013WP-NS-0.out
CHNL# 140: [VOLT199240 [BWATER A230.00]]
CHNL# 139: [VOLT199200 [BRUSHY 230.00]]
CHNL# 138: [VOLT199130 [ONSLOW 230.00]]
CHNL# 137: [VOLT199050 [HASTINGS230.00]]
CHNL# 136: [VOLT199044 [PT.ACONI230.00]]
CHNL# 135: [VOLT199000 [LINGAN 230.00]]
1.2000
0.70000
0.0
1.0000
2.0000
3.0000
4.0000
5.0000
6.0000
7.0000
8.0000
9.0000
10.000
TIME (SECONDS)
THU, JAN 29 2009 15:50
230KV BUS VOLTS

2013 WINTER PEAK STORA MIN
NS-NB=0; NB-NE=500; CBX=732; ONI=961 ONS=851
3 PHASE FAULT ON L6503 AT TRENTON
CLEARED IN 5 CYCLES: NO SPS
FILE: a10-3p_6503_50n-2013WP-NS-0.out
CHNL# 217: [L6533NMW]
CHNL# 215: [L6503MW]
CHNL# 197: [L8003MW]
CHNL# 195: [L8004MW]
CHNL# 193: [L8001MW]
CHNL# 221: [L3001MW]
250.00
500.00
1000.0
0.0
-250.0
-1000.
0.0
1.0000
2.0000
3.0000
4.0000
5.0000
6.0000
7.0000
8.0000
9.0000
10.000
TIME (SECONDS)
THU, JAN 29 2009 15:50
LINE FLOW MW

2013 WINTER PEAK STORA MIN
NS-NB=0; NB-NE=500; CBX=732; ONI=961 ONS=851
3 PHASE FAULT ON L6503 AT TRENTON
CLEARED IN 5 CYCLES: NO SPS
FILE: a10-3p_6503_50n-2013WP-NS-0.out
CHNL# 154: [IR141-DIGBYH69.0 VOLTS]
CHNL# 153: [IR137-STATIG25.0 VOLTS]
CHNL# 152: [IR114-GLENDH138.0 VOLTS]
CHNL# 151: [IR84-DALHOHV230.0 VOLTS]
CHNL# 150: [IR82_NUTBHV69.0 VOLTS]
CHNL# 149: [IR45_AMHERTP138.0 VOLTS]
1.2000
0.70000
0.0
1.0000
2.0000
3.0000
4.0000
5.0000
6.0000
7.0000
8.0000
9.0000
10.000
TIME (SECONDS)
THU, JAN 29 2009 15:50
WIND BUS VOLTS

2013 WINTER PEAK STORA MIN
NS-NB=0; NB-NE=500; CBX=732; ONI=961 ONS=851
3 PHASE FAULT ON T81 AT WOODBINE
CLEARED IN 4.5 CYCLES: NO SPS
FILE: a12-3p_79n-2013WP-NS-0.out
CHNL#S 20.4: [ANGL199169] [TUFTCV3 14.400] [3] [ANGL156661] [DARL G1 22.000] [1]
CHNL#S 17.4: [ANGL199086] [TRENTON613.800] [6 1] [ANGL156661] [DARL G1 22.000] [1]
CHNL#S 16.4: [ANGL199085] [TRENTN5 13.800] [5 1] [ANGL156661] [DARL G1 22.000] [1]
CHNL#S 15.4: [ANGL199061] [TMP1 STO13.800] [1 1] [ANGL156661] [DARL G1 22.000] [1]
CHNL#S 13.4: [ANGL199043] [ACONIG1 20.000] [1 1] [ANGL156661] [DARL G1 22.000] [1]
CHNL#S 11.4: [ANGL199001] [LINGAN1 14.400] [1 1] [ANGL156661] [DARL G1 22.000] [1]
100.00
-100.0
0.0
1.0000
2.0000
3.0000
4.0000
5.0000
6.0000
7.0000
8.0000
9.0000
10.000
TIME (SECONDS)
THU, JAN 29 2009 15:50
NS ANGLE

2013 WINTER PEAK STORA MIN
NS-NB=0; NB-NE=500; CBX=732; ONI=961 ONS=851
3 PHASE FAULT ON T81 AT WOODBINE
CLEARED IN 4.5 CYCLES: NO SPS
FILE: a12-3p_79n-2013WP-NS-0.out
CHNL#S 10.4: [ANGL190472] [BLLDNG2 19.000] [1] [ANGL156661] [DARL G1 22.000] [1]
CHNL#S 6.4: [ANGL190456] [LEPRG1 26.000] [1] [ANGL156661] [DARL G1 22.000] [1]
CHNL#S 5.4: [ANGL190450] [MACTG1 13.800] [1] [ANGL156661] [DARL G1 22.000] [1]
CHNL#S 3.4: [ANGL126652] [RAV 3 22.000] [1] [ANGL156661] [DARL G1 22.000] [1]
CHNL#S 2.4: [ANGL101063] [MYST G7 22.000] [1] [ANGL156661] [DARL G1 22.000] [1]
CHNL#S 7.4: [ANGL190457] [C.CVG1 19.000] [1] [ANGL156661] [DARL G1 22.000] [1]
100.00
-100.0
0.0
1.0000
2.0000
3.0000
4.0000
5.0000
6.0000
7.0000
8.0000
9.0000
10.000
TIME (SECONDS)
THU, JAN 29 2009 15:50
"NE,NY,NB ANGLE"

2013 WINTER PEAK STORA MIN
NS-NB=0; NB-NE=500; CBX=732; ONI=961 ONS=851
3 PHASE FAULT ON T81 AT WOODBINE
CLEARED IN 4.5 CYCLES: NO SPS
FILE: a12-3p_79n-2013WP-NS-0.out
CHNL# 59: [POWR199169] [TUFTCV3 14.400] [3 1]
CHNL# 56: [POWR199086] [TRENTON613.800] [6 1]
CHNL# 55: [POWR199085] [TRENTN5 13.800] [5 1]
CHNL# 54: [POWR199061] [TMP1 STO13.800] [1 1]
CHNL# 52: [POWR199043] [ACONIG1 20.000] [1 1]
CHNL# 50: [POWR199001] [LINGAN1 14.400] [1 1]
2.5000
-1.500
0.0
1.0000
2.0000
3.0000
4.0000
5.0000
6.0000
7.0000
8.0000
9.0000
10.000
TIME (SECONDS)
THU, JAN 29 2009 15:50
NS MW

2013 WINTER PEAK STORA MIN
NS-NB=0; NB-NE=500; CBX=732; ONI=961 ONS=851
3 PHASE FAULT ON T81 AT WOODBINE
CLEARED IN 4.5 CYCLES: NO SPS
FILE: a12-3p_79n-2013WP-NS-0.out
CHNL# 49: [POWR190472] [BLLDNG2 19.000] [1]
CHNL# 45: [POWR190456] [LEPRG1 26.000] [1]
CHNL# 44: [POWR190450] [MACTG1 13.800] [1]
CHNL# 42: [POWR126652] [RAV 3 22.000] [1]
CHNL# 41: [POWR101063] [MYST G7 22.000] [1]
CHNL# 46: [POWR190457] [C.CVG1 19.000] [1]
7.0000
4.0000
0.0
1.0000
2.0000
3.0000
4.0000
5.0000
6.0000
7.0000
8.0000
9.0000
10.000
TIME (SECONDS)
THU, JAN 29 2009 15:50
"NE,NY,NB POWER"

2013 WINTER PEAK STORA MIN
NS-NB=0; NB-NE=500; CBX=732; ONI=961 ONS=851
3 PHASE FAULT ON T81 AT WOODBINE
CLEARED IN 4.5 CYCLES: NO SPS
FILE: a12-3p_79n-2013WP-NS-0.out
CHNL# 119: [VARS IR141-DIGBY]
CHNL# 118: [VARS IR137-STATIA]
CHNL# 117: [VARS IR114-GLENDHU]
CHNL# 116: [VARS IR84-DALHOUSIE]
CHNL# 115: [VARS IR82_NUTTBY]
CHNL# 114: [VARS IR45_AMHERST]
TIME (SECONDS)
THU, JAN 29 2009 15:50
NS WIND MV

2013 WINTER PEAK STORA MIN
NS-NB=0; NB-NE=500; CBX=732; ONI=961 ONS=851
3 PHASE FAULT ON T81 AT WOODBINE
CLEARED IN 4.5 CYCLES: NO SPS
FILE: a12-3p_79n-2013WP-NS-0.out
CHNL# 79: [POWER IR141-DIGBY]
CHNL# 78: [POWER IR137-STATIA]
CHNL# 77: [POWER IR114-GLENDHU]
CHNL# 76: [POWER IR84-DALHOUSIE]
CHNL# 75: [POWER IR82_NUTTBY]
CHNL# 74: [POWER IR45_AMHERST]
TIME (SECONDS)
THU, JAN 29 2009 15:50
NS WIND MW

2013 WINTER PEAK STORA MIN
NS-NB=0; NB-NE=500; CBX=732; ONI=961 ONS=851
3 PHASE FAULT ON T81 AT WOODBINE
CLEARED IN 4.5 CYCLES: NO SPS
FILE: a12-3p_79n-2013WP-NS-0.out
CHNL# 133: [VOLT199125 [ONSLOW 345.00]]
CHNL# 132: [VOLT199120 [HOPEWELL 345.00]]
CHNL# 131: [VOLT199045 [WOODBINE345.00]]
CHNL# 130: [VOLT190320 [SALBRY 345.00]]
CHNL# 128: [VOLT190004 [KESWICK 345.00]]
CHNL# 127: [VOLT 70002 [ORRINGTN345.00]]
TIME (SECONDS)
THU, JAN 29 2009 15:50
"345KV VOLTAGE"

2013 WINTER PEAK STORA MIN
NS-NB=0; NB-NE=500; CBX=732; ONI=961 ONS=851
3 PHASE FAULT ON T81 AT WOODBINE
CLEARED IN 4.5 CYCLES: NO SPS
FILE: a12-3p_79n-2013WP-NS-0.out
CHNL# 125: 60*(1+[FREQ199125 [ONSLOW 345.00]])
CHNL# 124: 60*(1+[FREQ199120 [HOPEWELL 345.00]])
CHNL# 123: 60*(1+[FREQ199045 [WOODBINE345.00]])
CHNL# 122: 60*(1+[FREQ190320 [SALBRY 345.00]])
CHNL# 121: 60*(1+[FREQ190197 [C.COVE 345.00]])
CHNL# 120: 60*(1+[FREQ 70002 [ORRINGTN345.00]])
TIME (SECONDS)
THU, JAN 29 2009 15:50
FREQUENCY HZ

2013 WINTER PEAK STORA MIN
NS-NB=0; NB-NE=500; CBX=732; ONI=961 ONS=851
3 PHASE FAULT ON T81 AT WOODBINE
CLEARED IN 4.5 CYCLES: NO SPS
FILE: a12-3p_79n-2013WP-NS-0.out
CHNL# 146: [VOLT199280 [TUSKET A138.00]]
CHNL# 145: [VOLT199193 [HHWAS 138.00]]
CHNL# 144: [VOLT199165 [TUFTCOVE138.00]]
CHNL# 143: [VOLT199135 [SPRNGHILL138.00]]
CHNL# 142: [VOLT199090 [SON-TREN138.00]]
CHNL# 141: [VOLT199051 [HASTINGS138.00]]
1.2000
0.70000
0.0
1.0000
2.0000
3.0000
4.0000
5.0000
6.0000
7.0000
8.0000
9.0000
10.000
TIME (SECONDS)
THU, JAN 29 2009 15:50
138KV BUS VOLTS

2013 WINTER PEAK STORA MIN
NS-NB=0; NB-NE=500; CBX=732; ONI=961 ONS=851
3 PHASE FAULT ON T81 AT WOODBINE
CLEARED IN 4.5 CYCLES: NO SPS
FILE: a12-3p_79n-2013WP-NS-0.out
CHNL# 140: [VOLT199240 [BWATER A230.00]]
CHNL# 139: [VOLT199200 [BRUSHY 230.00]]
CHNL# 138: [VOLT199130 [ONSLOW 230.00]]
CHNL# 137: [VOLT199050 [HASTINGS230.00]]
CHNL# 136: [VOLT199044 [PT.ACONI230.00]]
CHNL# 135: [VOLT199000 [LINGAN 230.00]]
1.2000
0.70000
0.0
1.0000
2.0000
3.0000
4.0000
5.0000
6.0000
7.0000
8.0000
9.0000
10.000
TIME (SECONDS)
THU, JAN 29 2009 15:50
230KV BUS VOLTS

2013 WINTER PEAK STORA MIN
NS-NB=0; NB-NE=500; CBX=732; ONI=961 ONS=851
3 PHASE FAULT ON T81 AT WOODBINE
CLEARED IN 4.5 CYCLES: NO SPS
FILE: a12-3p_79n-2013WP-NS-0.out
CHNL# 217: [L6533NWV]
CHNL# 215: [L6503MVI]
CHNL# 197: [L8003MVI]
CHNL# 195: [L8004MVI]
CHNL# 193: [L8001MVI]
CHNL# 221: [L3001MVI]
250.00
500.00
1000.0
0.0
-250.0
-1000.
0.0
1.0000
2.0000
3.0000
4.0000
5.0000
6.0000
7.0000
8.0000
9.0000
10.000
TIME (SECONDS)
THU, JAN 29 2009 15:50
LINE FLOW MW

2013 WINTER PEAK STORA MIN
NS-NB=0; NB-NE=500; CBX=732; ONI=961 ONS=851
3 PHASE FAULT ON T81 AT WOODBINE
CLEARED IN 4.5 CYCLES: NO SPS
FILE: a12-3p_79n-2013WP-NS-0.out
CHNL# 154: [IR141-DIGBYH69.0 VOLTS]
CHNL# 153: [IR137-STATIG25.0 VOLTS]
CHNL# 152: [IR114-GLENDH138.0 VOLTS]
CHNL# 151: [IR84-DALHOHV230.0 VOLTS]
CHNL# 150: [IR82_NUTBHV69.0 VOLTS]
CHNL# 149: [IR45_ANHERTP138.0 VOLTS]
1.2000
0.70000
0.0
1.0000
2.0000
3.0000
4.0000
5.0000
6.0000
7.0000
8.0000
9.0000
10.000
TIME (SECONDS)
THU, JAN 29 2009 15:50
WIND BUS VOLTS

2013 WINTER PEAK STORA MIN
NS-NB=0; NB-NE=500; CBX=732; ONI=961 ONS=851
3 PHASE FAULT ON T81 AT WOODBINE
CLEARED IN 4.5 CYCLES: SPS DROPS LINGAN UNIT 2
FILE: a12s-3p_79n-2013WP-NS-0.out
CHNL#S 20.4: [ANGL199189 [TUFTCV3 14.400] [3]] [ANGL156661 [DARL G1 22.000] [1]
CHNL#S 17.4: [ANGL199086 [TRENTON613.800] [6]] [ANGL156661 [DARL G1 22.000] [1]
CHNL#S 16.4: [ANGL199085 [TRENTN5 13.800] [5]] [ANGL156661 [DARL G1 22.000] [1]
CHNL#S 15.4: [ANGL199061 [TMP1 STO13.800] [1]] [ANGL156661 [DARL G1 22.000] [1]
CHNL#S 13.4: [ANGL199043 [ACONIG1 20.000] [1]] [ANGL156661 [DARL G1 22.000] [1]
CHNL#S 11.4: [ANGL199001 [LINGAN1 14.400] [1]] [ANGL156661 [DARL G1 22.000] [1]
100.00
-100.0
50.000
-150.0
TIME (SECONDS)
THU, JAN 29 2009 15:50
NS ANGLE

2013 WINTER PEAK STORA MIN
NS-NB=0; NB-NE=500; CBX=732; ONI=961 ONS=851
3 PHASE FAULT ON T81 AT WOODBINE
CLEARED IN 4.5 CYCLES: SPS DROPS LINGAN UNIT 2
FILE: a12s-3p_79n-2013WP-NS-0.out
CHNL#S 10.4: [ANGL190472 [BLLDNG2 19.000] [1]] [ANGL156661 [DARL G1 22.000] [1]
CHNL#S 6.4: [ANGL190456 [LEPRG1 26.000] [1]] [ANGL156661 [DARL G1 22.000] [1]
CHNL#S 5.4: [ANGL190450 [MACTG1 13.800] [1]] [ANGL156661 [DARL G1 22.000] [1]
CHNL#S 3.4: [ANGL126652 [RAV 3 22.000] [1]] [ANGL156661 [DARL G1 22.000] [1]
CHNL#S 2.4: [ANGL101063 [MYST G7 22.000] [1]] [ANGL156661 [DARL G1 22.000] [1]
CHNL#S 7.4: [ANGL190457 [C.CVG1 19.000] [1]] [ANGL156661 [DARL G1 22.000] [1]
100.00
-100.0
TIME (SECONDS)
THU, JAN 29 2009 15:50
"NE,NY,NB ANGLE"

2013 WINTER PEAK STORA MIN
NS-NB=0; NB-NE=500; CBX=732; ONI=961 ONS=851
3 PHASE FAULT ON T81 AT WOODBINE
CLEARED IN 4.5 CYCLES: SPS DROPS LINGAN UNIT 2
FILE: a12s-3p_79n-2013WP-NS-0.out
CHNL# 59: [POWER199189 [TUFTCV3 14.400] [3]]
CHNL# 56: [POWER199086 [TRENTON613.800] [6]]
CHNL# 55: [POWER199085 [TRENTN5 13.800] [5]]
CHNL# 54: [POWER199061 [TMP1 STO13.800] [1]]
CHNL# 52: [POWER199043 [ACONIG1 20.000] [1]]
CHNL# 50: [POWER199001 [LINGAN1 14.400] [1]]
2.5000
0.0
1.0000
-1.500
TIME (SECONDS)
THU, JAN 29 2009 15:50
NS MW

2013 WINTER PEAK STORA MIN
NS-NB=0; NB-NE=500; CBX=732; ONI=961 ONS=851
3 PHASE FAULT ON T81 AT WOODBINE
CLEARED IN 4.5 CYCLES: SPS DROPS LINGAN UNIT 2
FILE: a12s-3p_79n-2013WP-NS-0.out
CHNL# 49: [POWER190472 [BLLDNG2 19.000] [1]]
CHNL# 45: [POWER190456 [LEPRG1 26.000] [1]]
CHNL# 44: [POWER190450 [MACTG1 13.800] [1]]
CHNL# 42: [POWER126652 [RAV 3 22.000] [1]]
CHNL# 41: [POWER101063 [MYST G7 22.000] [1]]
CHNL# 46: [POWER190457 [C.CVG1 19.000] [1]]
7.0000
2.0000
9.0000
4.0000
5.0000
0.0
6.5000
1.0000
TIME (SECONDS)
THU, JAN 29 2009 15:50
"NE,NY,NB POWER"

2013 WINTER PEAK STORA MIN
NS-NB=0; NB-NE=500; CBX=732; ONI=961 ONS=851
3 PHASE FAULT ON T81 AT WOODBINE
CLEARED IN 4.5 CYCLES: SPS DROPS LINGAN UNIT 2
FILE: a12s-3p_79n-2013WP-NS-0.out
CHNL# 119: [VARS IR141-DIGBY]
CHNL# 118: [VARS IR137-STATIA]
CHNL# 117: [VARS IR114-GLENDHU]
CHNL# 116: [VARS IR84-DALHOUSIE]
CHNL# 115: [VARS IR82_NUTTBY]
CHNL# 114: [VARS IR45_AMHERST]
0.50000
-0.5000
0.0
1.0000
2.0000
3.0000
4.0000
5.0000
6.0000
7.0000
8.0000
9.0000
10.000
TIME (SECONDS)
THU, JAN 29 2009 15:50
NS WIND MV

2013 WINTER PEAK STORA MIN
NS-NB=0; NB-NE=500; CBX=732; ONI=961 ONS=851
3 PHASE FAULT ON T81 AT WOODBINE
CLEARED IN 4.5 CYCLES: SPS DROPS LINGAN UNIT 2
FILE: a12s-3p_79n-2013WP-NS-0.out
CHNL# 79: [POWER IR141-DIGBY]
CHNL# 78: [POWER IR137-STATIA]
CHNL# 77: [POWER IR114-GLENDHU]
CHNL# 76: [POWER IR84-DALHOUSIE]
CHNL# 75: [POWER IR82_NUTTBY]
CHNL# 74: [POWER IR45_AMHERST]
1.0000
0.0
0.0
1.0000
2.0000
3.0000
4.0000
5.0000
6.0000
7.0000
8.0000
9.0000
10.000
TIME (SECONDS)
THU, JAN 29 2009 15:50
NS WIND MW

2013 WINTER PEAK STORA MIN
NS-NB=0; NB-NE=500; CBX=732; ONI=961 ONS=851
3 PHASE FAULT ON T81 AT WOODBINE
CLEARED IN 4.5 CYCLES: SPS DROPS LINGAN UNIT 2
FILE: a12s-3p_79n-2013WP-NS-0.out
CHNL# 133: [VOLT199125 [ONSLOW 345.00]]
CHNL# 132: [VOLT199120 [HOPEWELL345.00]]
CHNL# 131: [VOLT199045 [WOODBINE345.00]]
CHNL# 130: [VOLT190320 [SALBRY 345.00]]
CHNL# 128: [VOLT190004 [KESWICK 345.00]]
CHNL# 127: [VOLT 70002 [ORRINGTN345.00]]
1.1000
0.90000
0.0
1.0000
2.0000
3.0000
4.0000
5.0000
6.0000
7.0000
8.0000
9.0000
10.000
TIME (SECONDS)
THU, JAN 29 2009 15:50
"345KV VOLTAGE"

2013 WINTER PEAK STORA MIN
NS-NB=0; NB-NE=500; CBX=732; ONI=961 ONS=851
3 PHASE FAULT ON T81 AT WOODBINE
CLEARED IN 4.5 CYCLES: SPS DROPS LINGAN UNIT 2
FILE: a12s-3p_79n-2013WP-NS-0.out
CHNL# 125: 60*(1+[FREQ199125 [ONSLOW 345.00]])
CHNL# 124: 60*(1+[FREQ199120 [HOPEWELL345.00]])
CHNL# 123: 60*(1+[FREQ199045 [WOODBINE345.00]])
CHNL# 122: 60*(1+[FREQ190320 [SALBRY 345.00]])
CHNL# 121: 60*(1+[FREQ190197 [C.COVE 345.00]])
CHNL# 120: 60*(1+[FREQ 70002 [ORRINGTN345.00]])
60.500
59.500
0.0
1.0000
2.0000
3.0000
4.0000
5.0000
6.0000
7.0000
8.0000
9.0000
10.000
TIME (SECONDS)
THU, JAN 29 2009 15:50
FREQUENCY HZ

2013 WINTER PEAK STORA MIN
NS-NB=0; NB-NE=500; CBX=732; ONI=961 ONS=851
3 PHASE FAULT ON T81 AT WOODBINE
CLEARED IN 4.5 CYCLES: SPS DROPS LINGAN UNIT 2
FILE: a12s-3p_79n-2013WP-NS-0.out
CHNL# 146: [VOLT199280 [TUSKET A138.00]]
CHNL# 145: [VOLT199193 [HHWAS 138.00]]
CHNL# 144: [VOLT199165 [TUFTCOVE138.00]]
CHNL# 143: [VOLT199138 [SPRNGHILL138.00]]
CHNL# 142: [VOLT199090 [SON-TREN138.00]]
CHNL# 141: [VOLT199051 [HASTINGS138.00]]
1.2000
0.70000
0.0
1.0000
2.0000
3.0000
4.0000
5.0000
6.0000
7.0000
8.0000
9.0000
10.000
TIME (SECONDS)
THU, JAN 29 2009 15:50
138KV BUS VOLTS

2013 WINTER PEAK STORA MIN
NS-NB=0; NB-NE=500; CBX=732; ONI=961 ONS=851
3 PHASE FAULT ON T81 AT WOODBINE
CLEARED IN 4.5 CYCLES: SPS DROPS LINGAN UNIT 2
FILE: a12s-3p_79n-2013WP-NS-0.out
CHNL# 140: [VOLT199240 [BWATER A230.00]]
CHNL# 139: [VOLT199200 [BRUSHY 230.00]]
CHNL# 138: [VOLT199130 [ONSLOW 230.00]]
CHNL# 137: [VOLT199050 [HASTINGS230.00]]
CHNL# 136: [VOLT199044 [PT.ACONI230.00]]
CHNL# 135: [VOLT199000 [LINGAN 230.00]]
1.2000
0.70000
0.0
1.0000
2.0000
3.0000
4.0000
5.0000
6.0000
7.0000
8.0000
9.0000
10.000
TIME (SECONDS)
THU, JAN 29 2009 15:50
230KV BUS VOLTS

2013 WINTER PEAK STORA MIN
NS-NB=0; NB-NE=500; CBX=732; ONI=961 ONS=851
3 PHASE FAULT ON T81 AT WOODBINE
CLEARED IN 4.5 CYCLES: SPS DROPS LINGAN UNIT 2
FILE: a12s-3p_79n-2013WP-NS-0.out
CHNL# 217: [L6513MW]
CHNL# 215: [L6503MW]
CHNL# 197: [L8003MW]
CHNL# 195: [L8004MW]
CHNL# 193: [L8001MW]
CHNL# 221: [L3001MW]
250.00
500.00
1000.0
0.0
-250.0
-1000.
0.0
1.0000
2.0000
3.0000
4.0000
5.0000
6.0000
7.0000
8.0000
9.0000
10.000
TIME (SECONDS)
THU, JAN 29 2009 15:50
LINE FLOW MW

2013 WINTER PEAK STORA MIN
NS-NB=0; NB-NE=500; CBX=732; ONI=961 ONS=851
3 PHASE FAULT ON T81 AT WOODBINE
CLEARED IN 4.5 CYCLES: SPS DROPS LINGAN UNIT 2
FILE: a12s-3p_79n-2013WP-NS-0.out
CHNL# 154: [IR141-DIGBYH69.0 VOLTS]
CHNL# 153: [IR137-STATIG25.0 VOLTS]
CHNL# 152: [IR114-GLENDH138.0 VOLTS]
CHNL# 151: [IR84-DALHOHV230.0 VOLTS]
CHNL# 150: [IR82-NUTBHV69.0 VOLTS]
CHNL# 149: [IR45-AMHERTP138.0 VOLTS]
1.2000
0.70000
0.0
1.0000
2.0000
3.0000
4.0000
5.0000
6.0000
7.0000
8.0000
9.0000
10.000
TIME (SECONDS)
THU, JAN 29 2009 15:50
WIND BUS VOLTS

2013 WINTER PEAK STORA MIN
NS-NB=0; NB-NE=500; CBX=732; ONI=961 ONS=851
3 PHASE FAULT LAKESIDE B62, CLEARED IN
4 CYCLES, CLEARING L6008 AND L6016
FILE: a14-3ph_103h_b62-2013WP-NS-0.out
CHNL#S 20.4: [ANGL199169 [TUFTCV3 14.400] [3]] [ANGL156661 [DARL G1 22.000] [1
CHNL#S 17.4: [ANGL199086 [TRENTON613.800] [6]] [ANGL156661 [DARL G1 22.000] [1
CHNL#S 16.4: [ANGL199085 [TRENTN5 13.800] [5]] [ANGL156661 [DARL G1 22.000] [1
CHNL#S 15.4: [ANGL199061 [TMP1 STO13.800] [1]] [ANGL156661 [DARL G1 22.000] [1
CHNL#S 13.4: [ANGL199043 [ACONIG1 20.000] [1]] [ANGL156661 [DARL G1 22.000] [1
CHNL#S 11.4: [ANGL199001 [LINGAN1 14.400] [1]] [ANGL156661 [DARL G1 22.000] [1
100.00
-100.0
50.000
-150.0
0.0
1.0000
2.0000
3.0000
4.0000
5.0000
6.0000
7.0000
8.0000
9.0000
10.000
TIME (SECONDS)
THU, JAN 29 2009 15:50
NS ANGLE

2013 WINTER PEAK STORA MIN
NS-NB=0; NB-NE=500; CBX=732; ONI=961 ONS=851
3 PHASE FAULT LAKESIDE B62, CLEARED IN
4 CYCLES, CLEARING L6008 AND L6016
FILE: a14-3ph_103h_b62-2013WP-NS-0.out
CHNL#S 10.4: [ANGL190472 [BLLDNG2 19.000] [1]] [ANGL156661 [DARL G1 22.000] [1
CHNL#S 6.4: [ANGL190456 [LEPRG1 26.000] [1]] [ANGL156661 [DARL G1 22.000] [1
CHNL#S 5.4: [ANGL190450 [MACTG1 13.800] [1]] [ANGL156661 [DARL G1 22.000] [1
CHNL#S 3.4: [ANGL126652 [RAV 3 22.000] [1]] [ANGL156661 [DARL G1 22.000] [1
CHNL#S 2.4: [ANGL101063 [MYST G7 22.000] [1]] [ANGL156661 [DARL G1 22.000] [1
CHNL#S 7.4: [ANGL190457 [C.CVG1 19.000] [1]] [ANGL156661 [DARL G1 22.000] [1
100.00
-100.0
0.0
1.0000
2.0000
3.0000
4.0000
5.0000
6.0000
7.0000
8.0000
9.0000
10.000
TIME (SECONDS)
THU, JAN 29 2009 15:50
"NE,NY,NB ANGLE"

2013 WINTER PEAK STORA MIN
NS-NB=0; NB-NE=500; CBX=732; ONI=961 ONS=851
3 PHASE FAULT LAKESIDE B62, CLEARED IN
4 CYCLES, CLEARING L6008 AND L6016
FILE: a14-3ph_103h_b62-2013WP-NS-0.out
CHNL# 59: [POWER199169 [TUFTCV3 14.400] [3]]
CHNL# 56: [POWER199086 [TRENTON613.800] [6]]
CHNL# 55: [POWER199085 [TRENTN5 13.800] [5]]
CHNL# 54: [POWER199061 [TMP1 STO13.800] [1]]
CHNL# 52: [POWER199043 [ACONIG1 20.000] [1]]
CHNL# 50: [POWER199001 [LINGAN1 14.400] [1]]
2.5000
1.0000
-1.500
0.0
1.0000
2.0000
3.0000
4.0000
5.0000
6.0000
7.0000
8.0000
9.0000
10.000
TIME (SECONDS)
THU, JAN 29 2009 15:50
NS MW

2013 WINTER PEAK STORA MIN
NS-NB=0; NB-NE=500; CBX=732; ONI=961 ONS=851
3 PHASE FAULT LAKESIDE B62, CLEARED IN
4 CYCLES, CLEARING L6008 AND L6016
FILE: a14-3ph_103h_b62-2013WP-NS-0.out
CHNL# 49: [POWER190472 [BLLDNG2 19.000] [1]]
CHNL# 45: [POWER190456 [LEPRG1 26.000] [1]]
CHNL# 44: [POWER190450 [MACTG1 13.800] [1]]
CHNL# 42: [POWER126652 [RAV 3 22.000] [1]]
CHNL# 41: [POWER101063 [MYST G7 22.000] [1]]
CHNL# 46: [POWER190457 [C.CVG1 19.000] [1]]
7.0000
9.0000
5.0000
6.5000
4.0000
0.0
1.0000
2.0000
3.0000
4.0000
5.0000
6.0000
7.0000
8.0000
9.0000
10.000
TIME (SECONDS)
THU, JAN 29 2009 15:50
"NE,NY,NB POWER"

2013 WINTER PEAK STORA MIN
NS-NB=0; NB-NE=500; CBX=732; ONI=961 ONS=851
3 PHASE FAULT LAKESIDE B62, CLEARED IN
4 CYCLES, CLEARING L6008 AND L6016
FILE: a14-3ph_103h_b62-2013WP-NS-0.out
CHNL# 119: [VARS IR141-DIGBY]
CHNL# 118: [VARS IR137-STATIA]
CHNL# 117: [VARS IR114-GLENDHU]
CHNL# 116: [VARS IR84-DALHOUSIE]
CHNL# 115: [VARS IR82_NUTTBY]
CHNL# 114: [VARS IR45_AMHERST]
0.50000
-0.5000
0.0
1.0000
2.0000
3.0000
4.0000
5.0000
6.0000
7.0000
8.0000
9.0000
10.000
TIME (SECONDS)
THU, JAN 29 2009 15:50
NS WIND MV

2013 WINTER PEAK STORA MIN
NS-NB=0; NB-NE=500; CBX=732; ONI=961 ONS=851
3 PHASE FAULT LAKESIDE B62, CLEARED IN
4 CYCLES, CLEARING L6008 AND L6016
FILE: a14-3ph_103h_b62-2013WP-NS-0.out
CHNL# 79: [POWER IR141-DIGBY]
CHNL# 78: [POWER IR137-STATIA]
CHNL# 77: [POWER IR114-GLENDHU]
CHNL# 76: [POWER IR84-DALHOUSIE]
CHNL# 75: [POWER IR82_NUTTBY]
CHNL# 74: [POWER IR45_AMHERST]
1.0000
0.0
0.0
1.0000
2.0000
3.0000
4.0000
5.0000
6.0000
7.0000
8.0000
9.0000
10.000
TIME (SECONDS)
THU, JAN 29 2009 15:50
NS WIND MW

2013 WINTER PEAK STORA MIN
NS-NB=0; NB-NE=500; CBX=732; ONI=961 ONS=851
3 PHASE FAULT LAKESIDE B62, CLEARED IN
4 CYCLES, CLEARING L6008 AND L6016
FILE: a14-3ph_103h_b62-2013WP-NS-0.out
CHNL# 133: [VOLT199125 IONSLOW 345.00]
CHNL# 132: [VOLT199120 IHOPEWELL345.00]
CHNL# 131: [VOLT199045 IWOODBINE345.00]
CHNL# 130: [VOLT190320 ISALBRY 345.00]
CHNL# 128: [VOLT190004 IKESWICK 345.00]
CHNL# 127: [VOLT 70002 IORRINGTN345.00]
1.1000
0.90000
0.0
1.0000
2.0000
3.0000
4.0000
5.0000
6.0000
7.0000
8.0000
9.0000
10.000
TIME (SECONDS)
THU, JAN 29 2009 15:50
"345KV VOLTAGE"

2013 WINTER PEAK STORA MIN
NS-NB=0; NB-NE=500; CBX=732; ONI=961 ONS=851
3 PHASE FAULT LAKESIDE B62, CLEARED IN
4 CYCLES, CLEARING L6008 AND L6016
FILE: a14-3ph_103h_b62-2013WP-NS-0.out
CHNL# 125: 60*(1+[FREQ199125 IONSLOW 345.00])
CHNL# 124: 60*(1+[FREQ199120 IHOPEWELL345.00])
CHNL# 123: 60*(1+[FREQ199045 IWOODBINE345.00])
CHNL# 122: 60*(1+[FREQ190320 ISALBRY 345.00])
CHNL# 121: 60*(1+[FREQ190197 IC.COVE 345.00])
CHNL# 120: 60*(1+[FREQ 70002 IORRINGTN345.00])
60.500
59.500
0.0
1.0000
2.0000
3.0000
4.0000
5.0000
6.0000
7.0000
8.0000
9.0000
10.000
TIME (SECONDS)
THU, JAN 29 2009 15:50
FREQUENCY HZ

2013 WINTER PEAK STORA MIN
NS-NB=0; NB-NE=500; CBX=732; ONI=961 ONS=851
3 PHASE FAULT LAKESIDE B62, CLEARED IN
4 CYCLES, CLEARING L6008 AND L6016
FILE: a14-3ph_103h_b62-2013WP-NS-0.out
CHNL# 146: [VOLT199280 [TUSKET A138.00]]
CHNL# 145: [VOLT199193 [HHWAS 138.00]]
CHNL# 144: [VOLT199165 [TUFTCOVE138.00]]
CHNL# 143: [VOLT199135 [SPRNGHILL138.00]]
CHNL# 142: [VOLT199090 [SON-TREN138.00]]
CHNL# 141: [VOLT199051 [HASTINGS138.00]]
1.2000
0.70000
0.0
1.0000
2.0000
3.0000
4.0000
5.0000
6.0000
7.0000
8.0000
9.0000
10.000
TIME (SECONDS)
THU, JAN 29 2009 15:50
138KV BUS VOLTS

2013 WINTER PEAK STORA MIN
NS-NB=0; NB-NE=500; CBX=732; ONI=961 ONS=851
3 PHASE FAULT LAKESIDE B62, CLEARED IN
4 CYCLES, CLEARING L6008 AND L6016
FILE: a14-3ph_103h_b62-2013WP-NS-0.out
CHNL# 140: [VOLT199240 [BWATER A230.00]]
CHNL# 139: [VOLT199200 [BRUSHY 230.00]]
CHNL# 138: [VOLT199130 [ONSLOW 230.00]]
CHNL# 137: [VOLT199050 [HASTINGS230.00]]
CHNL# 136: [VOLT199044 [PT.ACONI230.00]]
CHNL# 135: [VOLT199000 [LINGAN 230.00]]
1.2000
0.70000
0.0
1.0000
2.0000
3.0000
4.0000
5.0000
6.0000
7.0000
8.0000
9.0000
10.000
TIME (SECONDS)
THU, JAN 29 2009 15:50
230KV BUS VOLTS

2013 WINTER PEAK STORA MIN
NS-NB=0; NB-NE=500; CBX=732; ONI=961 ONS=851
3 PHASE FAULT LAKESIDE B62, CLEARED IN
4 CYCLES, CLEARING L6008 AND L6016
FILE: a14-3ph_103h_b62-2013WP-NS-0.out
CHNL# 217: [L6533MW]
CHNL# 215: [L6503MW]
CHNL# 197: [L8003MW]
CHNL# 195: [L8004MW]
CHNL# 193: [L8001MW]
CHNL# 221: [L3001MW]
250.00
-250.0
500.00
0.0
1000.0
-1000.
0.0
1.0000
2.0000
3.0000
4.0000
5.0000
6.0000
7.0000
8.0000
9.0000
10.000
TIME (SECONDS)
THU, JAN 29 2009 15:50
LINE FLOW MW

2013 WINTER PEAK STORA MIN
NS-NB=0; NB-NE=500; CBX=732; ONI=961 ONS=851
3 PHASE FAULT LAKESIDE B62, CLEARED IN
4 CYCLES, CLEARING L6008 AND L6016
FILE: a14-3ph_103h_b62-2013WP-NS-0.out
CHNL# 154: [IR141-DIGBYH69.0 VOLTS]
CHNL# 153: [IR137-STATIG25.0 VOLTS]
CHNL# 152: [IR114-GLENDH138.0 VOLTS]
CHNL# 151: [IR84-DALHOHV230.0 VOLTS]
CHNL# 150: [IR32 NUTBHV69.0 VOLTS]
CHNL# 149: [IR45 AMHERTP138.0 VOLTS]
1.2000
0.70000
0.0
1.0000
2.0000
3.0000
4.0000
5.0000
6.0000
7.0000
8.0000
9.0000
10.000
TIME (SECONDS)
THU, JAN 29 2009 15:50
WIND BUS VOLTS

2013 WINTER PEAK STORA MIN
NS-NB=0; NB-NE=500; CBX=732; ONI=961 ONS=851
SLG FAULT ON LINGAN END OF 7012
88S723 FAILS, CLEARS 7012 AND 7014 IN 15 CYCLES: NO SPS
FILE: b01-7012_1ph_88s723-2013WP-NS-0.out
CHNL#S 20.4: [ANGL199169 [TUFTCV3 14.400] [3]] [ANGL156661 [DARL G1 22.000] [1]
CHNL#S 17.4: [ANGL199086 [TRENTON613.800] [6]] [ANGL156661 [DARL G1 22.000] [1]
CHNL#S 16.4: [ANGL199085 [TRENTN5 13.800] [5]] [ANGL156661 [DARL G1 22.000] [1]
CHNL#S 15.4: [ANGL199061 [TMP1 STO13.800] [1]] [ANGL156661 [DARL G1 22.000] [1]
CHNL#S 13.4: [ANGL199043 [ACONIG1 20.000] [1]] [ANGL156661 [DARL G1 22.000] [1]
CHNL#S 11.4: [ANGL199001 [LINGAN1 14.400] [1]] [ANGL156661 [DARL G1 22.000] [1]
100.00
-100.0
50.000
-150.0
0.0
1.0000
2.0000
3.0000
4.0000
5.0000
6.0000
7.0000
8.0000
9.0000
10.000
TIME (SECONDS)
THU, JAN 29 2009 15:50
NS ANGLE

2013 WINTER PEAK STORA MIN
NS-NB=0; NB-NE=500; CBX=732; ONI=961 ONS=851
SLG FAULT ON LINGAN END OF 7012
88S723 FAILS, CLEARS 7012 AND 7014 IN 15 CYCLES: NO SPS
FILE: b01-7012_1ph_88s723-2013WP-NS-0.out
CHNL#S 10.4: [ANGL190472 [BLLDNG2 19.000] [1]] [ANGL156661 [DARL G1 22.000] [1]
CHNL#S 6.4: [ANGL190456 [LEPRG1 26.000] [1]] [ANGL156661 [DARL G1 22.000] [1]
CHNL#S 5.4: [ANGL190450 [MACTG1 13.800] [1]] [ANGL156661 [DARL G1 22.000] [1]
CHNL#S 3.4: [ANGL126652 [RAV 3 22.000] [1]] [ANGL156661 [DARL G1 22.000] [1]
CHNL#S 2.4: [ANGL101063 [MYST G7 22.000] [1]] [ANGL156661 [DARL G1 22.000] [1]
CHNL#S 7.4: [ANGL190457 [C.CVG1 19.000] [1]] [ANGL156661 [DARL G1 22.000] [1]
100.00
-100.0
0.0
1.0000
2.0000
3.0000
4.0000
5.0000
6.0000
7.0000
8.0000
9.0000
10.000
TIME (SECONDS)
THU, JAN 29 2009 15:50
"NE,NY,NB ANGLE"

2013 WINTER PEAK STORA MIN
NS-NB=0; NB-NE=500; CBX=732; ONI=961 ONS=851
SLG FAULT ON LINGAN END OF 7012
88S723 FAILS, CLEARS 7012 AND 7014 IN 15 CYCLES: NO SPS
FILE: b01-7012_1ph_88s723-2013WP-NS-0.out
CHNL# 59: [POWER199169 [TUFTCV3 14.400] [3]]
CHNL# 56: [POWER199086 [TRENTON613.800] [6]]
CHNL# 55: [POWER199085 [TRENTN5 13.800] [5]]
CHNL# 54: [POWER199061 [TMP1 STO13.800] [1]]
CHNL# 52: [POWER199043 [ACONIG1 20.000] [1]]
CHNL# 50: [POWER199001 [LINGAN1 14.400] [1]]
2.5000
0.0
1.0000
-1.500
2.0000
3.0000
4.0000
5.0000
6.0000
7.0000
8.0000
9.0000
10.000
TIME (SECONDS)
THU, JAN 29 2009 15:50
NS MW

2013 WINTER PEAK STORA MIN
NS-NB=0; NB-NE=500; CBX=732; ONI=961 ONS=851
SLG FAULT ON LINGAN END OF 7012
88S723 FAILS, CLEARS 7012 AND 7014 IN 15 CYCLES: NO SPS
FILE: b01-7012_1ph_88s723-2013WP-NS-0.out
CHNL# 49: [POWER190472 [BLLDNG2 19.000] [1]]
CHNL# 45: [POWER190456 [LEPRG1 26.000] [1]]
CHNL# 44: [POWER190450 [MACTG1 13.800] [1]]
CHNL# 42: [POWER126652 [RAV 3 22.000] [1]]
CHNL# 41: [POWER101063 [MYST G7 22.000] [1]]
CHNL# 46: [POWER190457 [C.CVG1 19.000] [1]]
7.0000
2.0000
9.0000
4.0000
5.0000
0.0
6.5000
1.0000
5.0000
0.0
1.0000
2.0000
3.0000
4.0000
5.0000
6.0000
7.0000
8.0000
9.0000
10.000
TIME (SECONDS)
THU, JAN 29 2009 15:50
"NE,NY,NB POWER"

2013 WINTER PEAK STORA MIN
NS-NB=0; NB-NE=500; CBX=732; ONI=961 ONS=851
SLG FAULT ON LINGAN END OF 7012
88S723 FAILS, CLEARS 7012 AND 7014 IN 15 CYCLES: NO SPS
FILE: b01-7012_1ph_88s723-2013WP-NS-0.out
CHNL# 119: [VARS IR141-DIGBY]
CHNL# 118: [VARS IR137-STATIA]
CHNL# 117: [VARS IR114-GLENDHU]
CHNL# 116: [VARS IR84-DALHOUSIE]
CHNL# 115: [VARS IR82_NUTTBY]
CHNL# 114: [VARS IR45_AMHERST]
0.50000
-0.5000
TIME (SECONDS)
THU, JAN 29 2009 15:50
NS WIND MV

2013 WINTER PEAK STORA MIN
NS-NB=0; NB-NE=500; CBX=732; ONI=961 ONS=851
SLG FAULT ON LINGAN END OF 7012
88S723 FAILS, CLEARS 7012 AND 7014 IN 15 CYCLES: NO SPS
FILE: b01-7012_1ph_88s723-2013WP-NS-0.out
CHNL# 79: [POWER IR141-DIGBY]
CHNL# 78: [POWER IR137-STATIA]
CHNL# 77: [POWER IR114-GLENDHU]
CHNL# 76: [POWER IR84-DALHOUSIE]
CHNL# 75: [POWER IR82_NUTTBY]
CHNL# 74: [POWER IR45_AMHERST]
1.0000
0.0
TIME (SECONDS)
THU, JAN 29 2009 15:50
NS WIND MW

2013 WINTER PEAK STORA MIN
NS-NB=0; NB-NE=500; CBX=732; ONI=961 ONS=851
SLG FAULT ON LINGAN END OF 7012
88S723 FAILS, CLEARS 7012 AND 7014 IN 15 CYCLES: NO SPS
FILE: b01-7012_1ph_88s723-2013WP-NS-0.out
CHNL# 133: [VOLT199125 [ONSLOW 345.00]]
CHNL# 132: [VOLT199120 [HOPEWELL345.00]]
CHNL# 131: [VOLT199045 [WOODBINE345.00]]
CHNL# 130: [VOLT190320 [SALBRY 345.00]]
CHNL# 128: [VOLT190004 [KESWICK 345.00]]
CHNL# 127: [VOLT 70002 [ORRINGTN345.00]]
1.1000
0.90000
TIME (SECONDS)
THU, JAN 29 2009 15:50
"345KV VOLTAGE"

2013 WINTER PEAK STORA MIN
NS-NB=0; NB-NE=500; CBX=732; ONI=961 ONS=851
SLG FAULT ON LINGAN END OF 7012
88S723 FAILS, CLEARS 7012 AND 7014 IN 15 CYCLES: NO SPS
FILE: b01-7012_1ph_88s723-2013WP-NS-0.out
CHNL# 125: 60*(1+[FREQ199125 [ONSLOW 345.00]])
CHNL# 124: 60*(1+[FREQ199120 [HOPEWELL345.00]])
CHNL# 123: 60*(1+[FREQ199045 [WOODBINE345.00]])
CHNL# 122: 60*(1+[FREQ190320 [SALBRY 345.00]])
CHNL# 121: 60*(1+[FREQ190197 [C.COVE 345.00]])
CHNL# 120: 60*(1+[FREQ 70002 [ORRINGTN345.00]])
60.500
59.500
TIME (SECONDS)
THU, JAN 29 2009 15:50
FREQUENCY HZ

2013 WINTER PEAK STORA MIN
NS-NB=0; NB-NE=500; CBX=732; ONI=961 ONS=851
SLG FAULT ON LINGAN END OF 7012
88S723 FAILS, CLEARS 7012 AND 7014 IN 15 CYCLES: NO SPS
FILE: b01-7012_1ph_88s723-2013WP-NS-0.out
CHNL# 146: [VOLT199280 [TUSKET A138.00]]
CHNL# 145: [VOLT199193 [HHWAS 138.00]]
CHNL# 144: [VOLT199165 [TUFTCOVE138.00]]
CHNL# 143: [VOLT199138 [SPRNGHILL138.00]]
CHNL# 142: [VOLT199090 [SON-TREN138.00]]
CHNL# 141: [VOLT199051 [HASTINGS138.00]]
1.2000
0.70000
0.0
1.0000
2.0000
3.0000
4.0000
5.0000
6.0000
7.0000
8.0000
9.0000
10.000
TIME (SECONDS)
THU, JAN 29 2009 15:50
138KV BUS VOLTS

2013 WINTER PEAK STORA MIN
NS-NB=0; NB-NE=500; CBX=732; ONI=961 ONS=851
SLG FAULT ON LINGAN END OF 7012
88S723 FAILS, CLEARS 7012 AND 7014 IN 15 CYCLES: NO SPS
FILE: b01-7012_1ph_88s723-2013WP-NS-0.out
CHNL# 140: [VOLT199240 [BWATER A230.00]]
CHNL# 139: [VOLT199200 [BRUSHY 230.00]]
CHNL# 138: [VOLT199130 [ONSLOW 230.00]]
CHNL# 137: [VOLT199050 [HASTINGS230.00]]
CHNL# 136: [VOLT199044 [PT.ACONI230.00]]
CHNL# 135: [VOLT199000 [LINGAN 230.00]]
1.2000
0.70000
0.0
1.0000
2.0000
3.0000
4.0000
5.0000
6.0000
7.0000
8.0000
9.0000
10.000
TIME (SECONDS)
THU, JAN 29 2009 15:50
230KV BUS VOLTS

2013 WINTER PEAK STORA MIN
NS-NB=0; NB-NE=500; CBX=732; ONI=961 ONS=851
SLG FAULT ON LINGAN END OF 7012
88S723 FAILS, CLEARS 7012 AND 7014 IN 15 CYCLES: NO SPS
FILE: b01-7012_1ph_88s723-2013WP-NS-0.out
CHNL# 217: [L6533MW]
CHNL# 215: [L6503MW]
CHNL# 197: [L8003MW]
CHNL# 195: [L8004MW]
CHNL# 193: [L8001MW]
CHNL# 221: [L3001MW]
250.00
500.00
1000.0
-250.0
0.0
-1000.
0.0
1.0000
2.0000
3.0000
4.0000
5.0000
6.0000
7.0000
8.0000
9.0000
10.000
TIME (SECONDS)
THU, JAN 29 2009 15:50
LINE FLOW MW

2013 WINTER PEAK STORA MIN
NS-NB=0; NB-NE=500; CBX=732; ONI=961 ONS=851
SLG FAULT ON LINGAN END OF 7012
88S723 FAILS, CLEARS 7012 AND 7014 IN 15 CYCLES: NO SPS
FILE: b01-7012_1ph_88s723-2013WP-NS-0.out
CHNL# 154: [IR141-DIGBYH69.0 VOLTS]
CHNL# 153: [IR137-STATIG25.0 VOLTS]
CHNL# 152: [IR114-GLENDH138.0 VOLTS]
CHNL# 151: [IR84-DALHOHV230.0 VOLTS]
CHNL# 150: [IR82_NUTBHV69.0 VOLTS]
CHNL# 149: [IR45_AMHERTP138.0 VOLTS]
1.2000
0.70000
0.0
1.0000
2.0000
3.0000
4.0000
5.0000
6.0000
7.0000
8.0000
9.0000
10.000
TIME (SECONDS)
THU, JAN 29 2009 15:50
WIND BUS VOLTS

2013 WINTER PEAK STORA MIN
NS-NB=0; NB-NE=500; CBX=732; ONI=961 ONS=851
SLG FAULT ON LINGAN END OF 7012
88S723 FAILS, CLEARS 7012 AND 7014 IN 15 CYCLES: SPS TRIPS U
FILE: b01s-7012_1ph_88s723-2013WP-NS-0.out
CHNL#S 20.4: [ANGL199169 [TUFTCV3 14.400] [3]] [ANGL156661 [DARL G1 22.000] [1]
100.00 -100.0
CHNL#S 17.4: [ANGL199086 [TRENTON613.800] [6]] [ANGL156661 [DARL G1 22.000] [1]
100.00 -100.0
CHNL#S 16.4: [ANGL199085 [TRENTN5 13.800] [5]] [ANGL156661 [DARL G1 22.000] [1]
100.00 -100.0
CHNL#S 15.4: [ANGL199061 [TMP1 STO13.800] [1]] [ANGL156661 [DARL G1 22.000] [1]
50.000 -150.0
CHNL#S 13.4: [ANGL199043 [ACONIG1 20.000] [1]] [ANGL156661 [DARL G1 22.000] [1]
100.00 -100.0
CHNL#S 11.4: [ANGL199001 [LINGAN1 14.400] [1]] [ANGL156661 [DARL G1 22.000] [1]
100.00 -100.0
0.0 1.0000 2.0000 3.0000 4.0000 5.0000 6.0000 7.0000 8.0000 9.0000 10.000
TIME (SECONDS)
THU, JAN 29 2009 15:50
NS ANGLE

2013 WINTER PEAK STORA MIN
NS-NB=0; NB-NE=500; CBX=732; ONI=961 ONS=851
SLG FAULT ON LINGAN END OF 7012
88S723 FAILS, CLEARS 7012 AND 7014 IN 15 CYCLES: SPS TRIPS U
FILE: b01s-7012_1ph_88s723-2013WP-NS-0.out
CHNL#S 10.4: [ANGL190472 [BLLDNG2 19.000] [1]] [ANGL156661 [DARL G1 22.000] [1]
100.00 -100.0
CHNL#S 6.4: [ANGL190456 [LEPRG1 26.000] [1]] [ANGL156661 [DARL G1 22.000] [1]
100.00 -100.0
CHNL#S 5.4: [ANGL190450 [MACTG1 13.800] [1]] [ANGL156661 [DARL G1 22.000] [1]
100.00 -100.0
CHNL#S 3.4: [ANGL126652 [RAV 3 22.000] [1]] [ANGL156661 [DARL G1 22.000] [1]
100.00 -100.0
CHNL#S 2.4: [ANGL101063 [MYST G7 22.000] [1]] [ANGL156661 [DARL G1 22.000] [1]
100.00 -100.0
CHNL#S 7.4: [ANGL190457 [C.CVG1 19.000] [1]] [ANGL156661 [DARL G1 22.000] [1]
100.00 -100.0
0.0 1.0000 2.0000 3.0000 4.0000 5.0000 6.0000 7.0000 8.0000 9.0000 10.000
TIME (SECONDS)
THU, JAN 29 2009 15:50
"NE,NY,NB ANGLE"

2013 WINTER PEAK STORA MIN
NS-NB=0; NB-NE=500; CBX=732; ONI=961 ONS=851
SLG FAULT ON LINGAN END OF 7012
88S723 FAILS, CLEARS 7012 AND 7014 IN 15 CYCLES: SPS TRIPS U
FILE: b01s-7012_1ph_88s723-2013WP-NS-0.out
CHNL# 59: [POWER199169 [TUFTCV3 14.400] [3]] 2.5000 0.0
CHNL# 56: [POWER199086 [TRENTON613.800] [6]] 2.5000 0.0
CHNL# 55: [POWER199085 [TRENTN5 13.800] [5]] 2.5000 0.0
CHNL# 54: [POWER199061 [TMP1 STO13.800] [1]] 1.0000 -1.500
CHNL# 52: [POWER199043 [ACONIG1 20.000] [1]] 2.5000 0.0
CHNL# 50: [POWER199001 [LINGAN1 14.400] [1]] 2.5000 0.0
0.0 1.0000 2.0000 3.0000 4.0000 5.0000 6.0000 7.0000 8.0000 9.0000 10.000
TIME (SECONDS)
THU, JAN 29 2009 15:50
NS MW

2013 WINTER PEAK STORA MIN
NS-NB=0; NB-NE=500; CBX=732; ONI=961 ONS=851
SLG FAULT ON LINGAN END OF 7012
88S723 FAILS, CLEARS 7012 AND 7014 IN 15 CYCLES: SPS TRIPS U
FILE: b01s-7012_1ph_88s723-2013WP-NS-0.out
CHNL# 49: [POWER190472 [BLLDNG2 19.000] [1]] 7.0000 2.0000
CHNL# 45: [POWER190456 [LEPRG1 26.000] [1]] 9.0000 4.0000
CHNL# 44: [POWER190450 [MACTG1 13.800] [1]] 5.0000 0.0
CHNL# 42: [POWER126652 [RAV 3 22.000] [1]] 5.0000 0.0
CHNL# 41: [POWER101063 [MYST G7 22.000] [1]] 6.5000 1.0000
CHNL# 46: [POWER190457 [C.CVG1 19.000] [1]] 5.0000 0.0
0.0 1.0000 2.0000 3.0000 4.0000 5.0000 6.0000 7.0000 8.0000 9.0000 10.000
TIME (SECONDS)
THU, JAN 29 2009 15:50
"NE,NY,NB POWER"

2013 WINTER PEAK STORA MIN
NS-NB=0; NB-NE=500; CBX=732; ONI=961 ONS=851
SLG FAULT ON LINGAN END OF 7012
88S723 FAILS, CLEARS 7012 AND 7014 IN 15 CYCLES: SPS TRIPS U
FILE: b01s-7012_1ph_88s723-2013WP-NS-0.out
CHNL# 119: [VARS IR141-DIGBY]
CHNL# 118: [VARS IR137-STATIA]
CHNL# 117: [VARS IR114-GLENDHU]
CHNL# 116: [VARS IR84-DALHOUSIE]
CHNL# 115: [VARS IR82_NUTTBY]
CHNL# 114: [VARS IR45_AMHERST]
0.50000
-0.5000
0.0
1.0000
2.0000
3.0000
4.0000
5.0000
6.0000
7.0000
8.0000
9.0000
10.000
TIME (SECONDS)
THU, JAN 29 2009 15:50
NS WIND MV

2013 WINTER PEAK STORA MIN
NS-NB=0; NB-NE=500; CBX=732; ONI=961 ONS=851
SLG FAULT ON LINGAN END OF 7012
88S723 FAILS, CLEARS 7012 AND 7014 IN 15 CYCLES: SPS TRIPS U
FILE: b01s-7012_1ph_88s723-2013WP-NS-0.out
CHNL# 79: [POWER IR141-DIGBY]
CHNL# 78: [POWER IR137-STATIA]
CHNL# 77: [POWER IR114-GLENDHU]
CHNL# 76: [POWER IR84-DALHOUSIE]
CHNL# 75: [POWER IR82_NUTTBY]
CHNL# 74: [POWER IR45_AMHERST]
1.0000
0.0
1.0000
2.0000
3.0000
4.0000
5.0000
6.0000
7.0000
8.0000
9.0000
10.000
TIME (SECONDS)
THU, JAN 29 2009 15:50
NS WIND MW

2013 WINTER PEAK STORA MIN
NS-NB=0; NB-NE=500; CBX=732; ONI=961 ONS=851
SLG FAULT ON LINGAN END OF 7012
88S723 FAILS, CLEARS 7012 AND 7014 IN 15 CYCLES: SPS TRIPS U
FILE: b01s-7012_1ph_88s723-2013WP-NS-0.out
CHNL# 133: [VOLT199125 [ONSLOW 345.00]]
CHNL# 132: [VOLT199120 [HOPEWELL 345.00]]
CHNL# 131: [VOLT199045 [WOODBINE345.00]]
CHNL# 130: [VOLT190320 [SALBRY 345.00]]
CHNL# 128: [VOLT190004 [KESWICK 345.00]]
CHNL# 127: [VOLT 70002 [ORRINGTN345.00]]
0.90000
1.1000
0.0
1.0000
2.0000
3.0000
4.0000
5.0000
6.0000
7.0000
8.0000
9.0000
10.000
TIME (SECONDS)
THU, JAN 29 2009 15:50
"345KV VOLTAGE"

2013 WINTER PEAK STORA MIN
NS-NB=0; NB-NE=500; CBX=732; ONI=961 ONS=851
SLG FAULT ON LINGAN END OF 7012
88S723 FAILS, CLEARS 7012 AND 7014 IN 15 CYCLES: SPS TRIPS U
FILE: b01s-7012_1ph_88s723-2013WP-NS-0.out
CHNL# 125: 60*(1+[FREQ199125 [ONSLOW 345.00]])
CHNL# 124: 60*(1+[FREQ199120 [HOPEWELL 345.00]])
CHNL# 123: 60*(1+[FREQ199045 [WOODBINE345.00]])
CHNL# 122: 60*(1+[FREQ190320 [SALBRY 345.00]])
CHNL# 121: 60*(1+[FREQ190197 [C.COVE 345.00]])
CHNL# 120: 60*(1+[FREQ 70002 [ORRINGTN345.00]])
60.500
59.500
0.0
1.0000
2.0000
3.0000
4.0000
5.0000
6.0000
7.0000
8.0000
9.0000
10.000
TIME (SECONDS)
THU, JAN 29 2009 15:50
FREQUENCY HZ

2013 WINTER PEAK STORA MIN
NS-NB=0; NB-NE=500; CBX=732; ONI=961 ONS=851
SLG FAULT ON LINGAN END OF 7012
88S723 FAILS, CLEARS 7012 AND 7014 IN 15 CYCLES: SPS TRIPS U
FILE: b01s-7012_1ph_88s723-2013WP-NS-0.out
CHNL# 146: [VOLT199280 [TUSKET A138.00]]
CHNL# 145: [VOLT199193 [HHWAS 138.00]]
CHNL# 144: [VOLT199165 [TUFTCOVE138.00]]
CHNL# 143: [VOLT199138 [SPRNGHILL138.00]]
CHNL# 142: [VOLT199090 [SON-TREN138.00]]
CHNL# 141: [VOLT199051 [HASTINGS138.00]]
1.2000
0.70000
0.0
1.0000
2.0000
3.0000
4.0000
5.0000
6.0000
7.0000
8.0000
9.0000
10.000
TIME (SECONDS)
THU, JAN 29 2009 15:50
138KV BUS VOLTS

2013 WINTER PEAK STORA MIN
NS-NB=0; NB-NE=500; CBX=732; ONI=961 ONS=851
SLG FAULT ON LINGAN END OF 7012
88S723 FAILS, CLEARS 7012 AND 7014 IN 15 CYCLES: SPS TRIPS U
FILE: b01s-7012_1ph_88s723-2013WP-NS-0.out
CHNL# 140: [VOLT199240 [BWATER A230.00]]
CHNL# 139: [VOLT199200 [BRUSHY 230.00]]
CHNL# 138: [VOLT199130 [ONSLOW 230.00]]
CHNL# 137: [VOLT199050 [HASTINGS230.00]]
CHNL# 136: [VOLT199044 [PT.ACONI230.00]]
CHNL# 135: [VOLT199000 [LINGAN 230.00]]
1.2000
0.70000
0.0
1.0000
2.0000
3.0000
4.0000
5.0000
6.0000
7.0000
8.0000
9.0000
10.000
TIME (SECONDS)
THU, JAN 29 2009 15:50
230KV BUS VOLTS

2013 WINTER PEAK STORA MIN
NS-NB=0; NB-NE=500; CBX=732; ONI=961 ONS=851
SLG FAULT ON LINGAN END OF 7012
88S723 FAILS, CLEARS 7012 AND 7014 IN 15 CYCLES: SPS TRIPS U
FILE: b01s-7012_1ph_88s723-2013WP-NS-0.out
CHNL# 217: [L6533MW]
CHNL# 215: [L6503MW]
CHNL# 197: [L8003MW]
CHNL# 195: [L8004MW]
CHNL# 193: [L8001MW]
CHNL# 221: [L3001MW]
250.00
500.00
1000.0
0.0
-250.0
-1000.
0.0
1.0000
2.0000
3.0000
4.0000
5.0000
6.0000
7.0000
8.0000
9.0000
10.000
TIME (SECONDS)
THU, JAN 29 2009 15:50
LINE FLOW MW

2013 WINTER PEAK STORA MIN
NS-NB=0; NB-NE=500; CBX=732; ONI=961 ONS=851
SLG FAULT ON LINGAN END OF 7012
88S723 FAILS, CLEARS 7012 AND 7014 IN 15 CYCLES: SPS TRIPS U
FILE: b01s-7012_1ph_88s723-2013WP-NS-0.out
CHNL# 154: [IR141-DIGBYH69.0 VOLTS]
CHNL# 153: [IR137-STATIG25.0 VOLTS]
CHNL# 152: [IR114-GLENDH138.0 VOLTS]
CHNL# 151: [IR84-DALHOHV230.0 VOLTS]
CHNL# 150: [IR82-NUTBHV69.0 VOLTS]
CHNL# 149: [IR45-AMHERTP138.0 VOLTS]
1.2000
0.70000
0.0
1.0000
2.0000
3.0000
4.0000
5.0000
6.0000
7.0000
8.0000
9.0000
10.000
TIME (SECONDS)
THU, JAN 29 2009 15:50
WIND BUS VOLTS

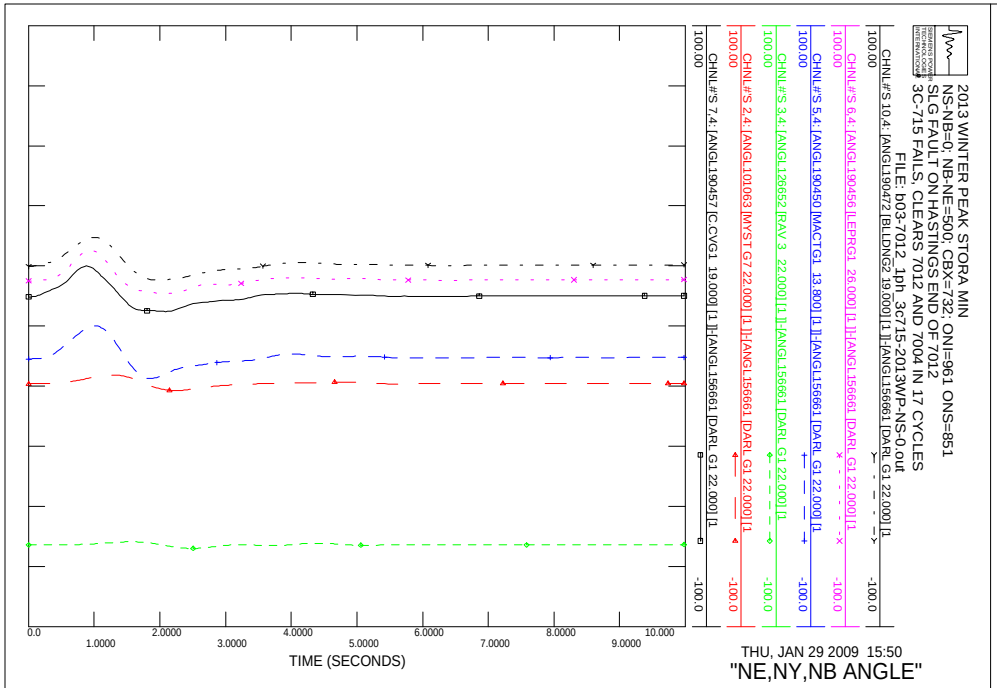
2013 WINTER PEAK STORA MIN
NS-NB=0; NB-NE=500; CBX=732; ONI=961 ONS=851
SLG FAULT ON HASTINGS END OF 7012
3C-715 FAILS, CLEARS 7012 AND 7004 IN 17 CYCLES
FILE: b03-7012_1ph_3c715-2013WP-NS-0.out
CHNL#S 10,4: [ANGL190472 [BLLDNG2 19.000] [1]]-[ANGL156661 [DARL G1 22.000] [1
CHNL#S 6,4: [ANGL190456 [LEPRG1 26.000] [1]]-[ANGL156661 [DARL G1 22.000] [1
CHNL#S 5,4: [ANGL190450 [MACTG1 13.800] [1]]-[ANGL156661 [DARL G1 22.000] [1
CHNL#S 3,4: [ANGL126652 [RAV 3 22.000] [1]]-[ANGL156661 [DARL G1 22.000] [1
CHNL#S 2,4: [ANGL101063 [MYST G7 22.000] [1]]-[ANGL156661 [DARL G1 22.000] [1
CHNL#S 7,4: [ANGL190457 [C.CVG1 19.000] [1]]-[ANGL156661 [DARL G1 22.000] [1
TIME (SECONDS)
THU, JAN 29 2009 15:50
"NE,NY,NB ANGLE"

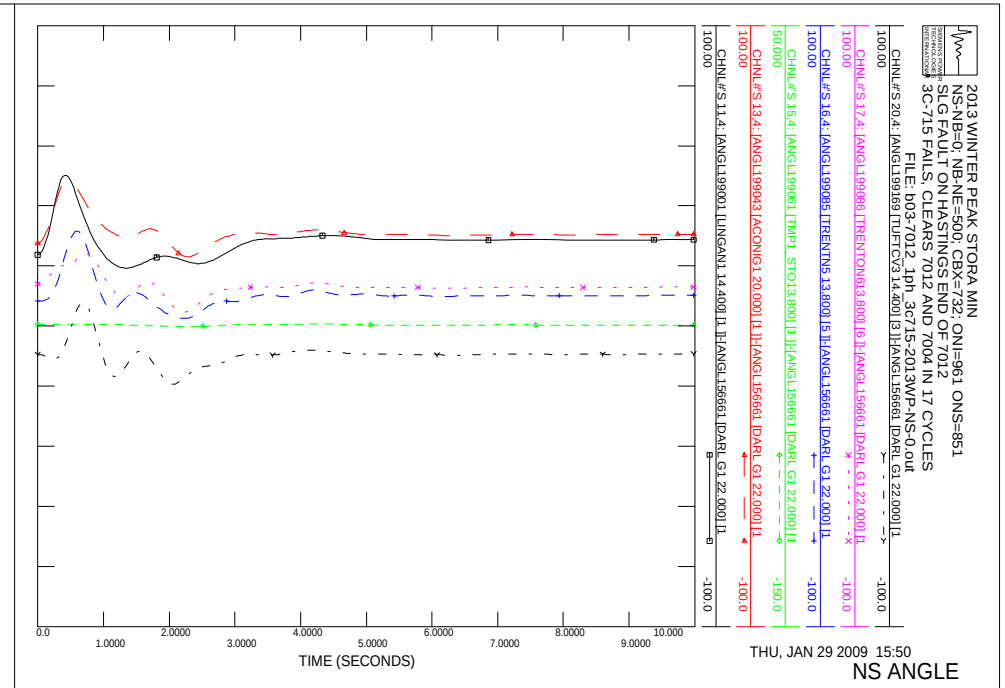
2013 WINTER PEAK STORA MIN
NS-NB=0; NB-NE=500; CBX=732; ONI=961 ONS=851
SLG FAULT ON HASTINGS END OF 7012
3C-715 FAILS, CLEARS 7012 AND 7004 IN 17 CYCLES
FILE: b03-7012_1ph_3c715-2013WP-NS-0.out
CHNL#S 20,4: [ANGL199169 [TUFTCV3 14.400] [3]]-[ANGL156661 [DARL G1 22.000] [1
CHNL#S 17,4: [ANGL199086 [TRENTON613.800] [6]]-[ANGL156661 [DARL G1 22.000] [1
CHNL#S 16,4: [ANGL199085 [TRENTN5 13.800] [5]]-[ANGL156661 [DARL G1 22.000] [1
CHNL#S 15,4: [ANGL199061 [TMP1 STO13.800] [1]]-[ANGL156661 [DARL G1 22.000] [1
CHNL#S 13,4: [ANGL199043 [ACONIG1 20.000] [1]]-[ANGL156661 [DARL G1 22.000] [1
CHNL#S 11,4: [ANGL199001 [LINGAN1 14.400] [1]]-[ANGL156661 [DARL G1 22.000] [1
TIME (SECONDS)
THU, JAN 29 2009 15:50
NS ANGLE

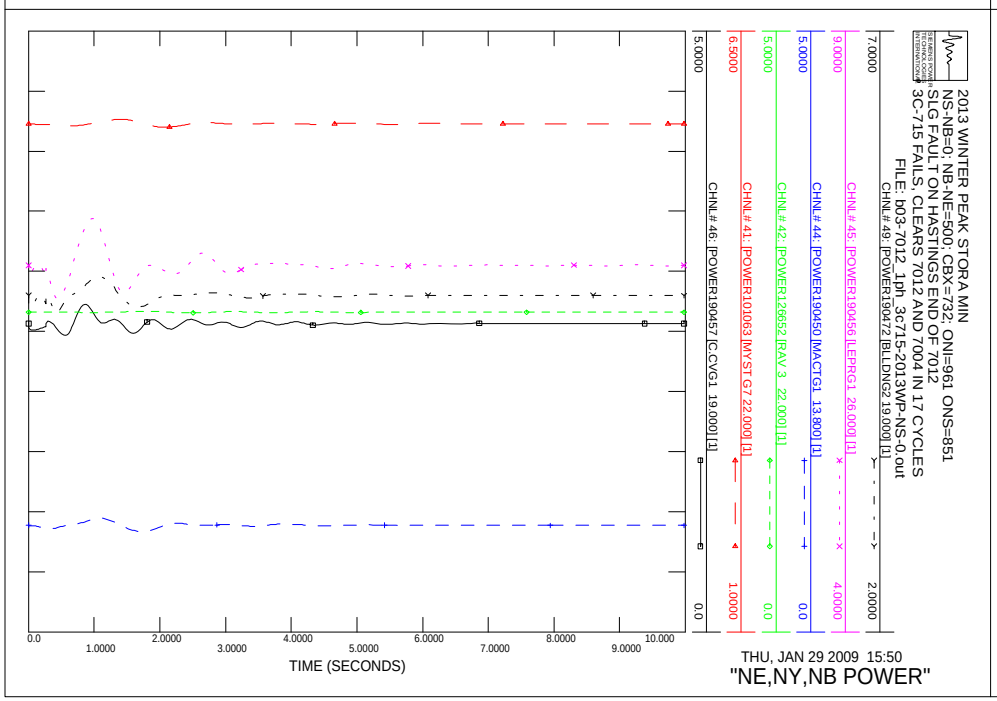
2013 WINTER PEAK STORA MIN
NS-NB=0; NB-NE=500; CBX=732; ONI=961 ONS=851
SLG FAULT ON HASTINGS END OF 7012
3C-715 FAILS, CLEARS 7012 AND 7004 IN 17 CYCLES
FILE: b03-7012_1ph_3c715-2013WP-NS-0.out
CHNL# 49: [POWER190472 [BLLDNG2 19.000] [1]
CHNL# 45: [POWER190456 [LEPRG1 26.000] [1]
CHNL# 44: [POWER190450 [MACTG1 13.800] [1]
CHNL# 42: [POWER126652 [RAV 3 22.000] [1]
CHNL# 41: [POWER101063 [MYST G7 22.000] [1]
CHNL# 46: [POWER190457 [C.CVG1 19.000] [1]
TIME (SECONDS)
THU, JAN 29 2009 15:50
"NE,NY,NB POWER"

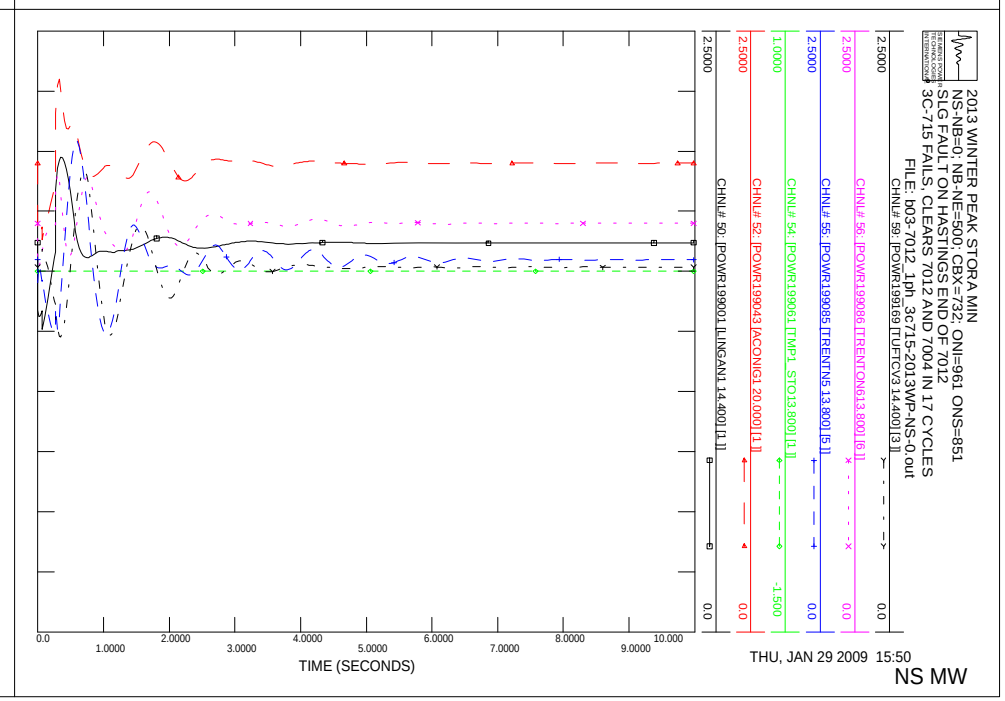
2013 WINTER PEAK STORA MIN
NS-NB=0; NB-NE=500; CBX=732; ONI=961 ONS=851
SLG FAULT ON HASTINGS END OF 7012
3C-715 FAILS, CLEARS 7012 AND 7004 IN 17 CYCLES
FILE: b03-7012_1ph_3c715-2013WP-NS-0.out
CHNL# 59: [POWR199169 [TUFTCV3 14.400] [3]]
CHNL# 56: [POWR199086 [TRENTON613.800] [6]]
CHNL# 55: [POWR199085 [TRENTN5 13.800] [5]]
CHNL# 54: [POWR199061 [TMP1 STO13.800] [1]]
CHNL# 52: [POWR199043 [ACONIG1 20.000] [1]]
CHNL# 50: [POWR199001 [LINGAN1 14.400] [1]]
TIME (SECONDS)
THU, JAN 29 2009 15:50
NS MW

2013 WINTER PEAK STORA MIN
NS-NB=0; NB-NE=500; CBX=732; ONI=961 ONS=851
SLG FAULT ON HASTINGS END OF 7012
3C-715 FAILS, CLEARS 7012 AND 7004 IN 17 CYCLES
FILE: b03-7012_1ph_3c715-2013WP-NS-0.out
CHNL# 114: [VARS IR45_AMHERST]
CHNL# 115: [VARS IR82_NUTTBY]
CHNL# 116: [VARS IR84-DALHOUSIE]
CHNL# 117: [VARS IR114-GLENDHU]
CHNL# 118: [VARS IR137-STATIA]
CHNL# 119: [VARS IR141-DIGBY]
0.50000
-0.5000
TIME (SECONDS)
THU, JAN 29 2009 15:50
NS WIND MV

2013 WINTER PEAK STORA MIN
NS-NB=0; NB-NE=500; CBX=732; ONI=961 ONS=851
SLG FAULT ON HASTINGS END OF 7012
3C-715 FAILS, CLEARS 7012 AND 7004 IN 17 CYCLES
FILE: b03-7012_1ph_3c715-2013WP-NS-0.out
CHNL# 74: [POWER IR45_AMHERST]
CHNL# 75: [POWER IR82_NUTTBY]
CHNL# 76: [POWER IR84-DALHOUSIE]
CHNL# 77: [POWER IR114-GLENDHU]
CHNL# 78: [POWER IR137-STATIA]
CHNL# 79: [POWER IR141-DIGBY]
1.0000
0.0
TIME (SECONDS)
THU, JAN 29 2009 15:50
NS WIND MW

2013 WINTER PEAK STORA MIN
NS-NB=0; NB-NE=500; CBX=732; ONI=961 ONS=851
SLG FAULT ON HASTINGS END OF 7012
3C-715 FAILS, CLEARS 7012 AND 7004 IN 17 CYCLES
FILE: b03-7012_1ph_3c715-2013WP-NS-0.out
CHNL# 127: [VOLT 70002 [ORRINGTN345.00]]
CHNL# 128: [VOLT190004 [KESWICK 345.00]]
CHNL# 130: [VOLT190320 [SALBRY 345.00]]
CHNL# 131: [VOLT199045 [WOODBINE345.00]]
CHNL# 132: [VOLT199120 [HOPEWELL345.00]]
CHNL# 133: [VOLT199125 [ONSLOW 345.00]]
1.1000
0.90000
TIME (SECONDS)
THU, JAN 29 2009 15:50
"345KV VOLTAGE"

2013 WINTER PEAK STORA MIN
NS-NB=0; NB-NE=500; CBX=732; ONI=961 ONS=851
SLG FAULT ON HASTINGS END OF 7012
3C-715 FAILS, CLEARS 7012 AND 7004 IN 17 CYCLES
FILE: b03-7012_1ph_3c715-2013WP-NS-0.out
CHNL# 120: 60*(1+[FREQ 70002 [ORRINGTN345.00]])
CHNL# 121: 60*(1+[FREQ190197 [C.COVE 345.00]])
CHNL# 122: 60*(1+[FREQ190320 [SALBRY 345.00]])
CHNL# 123: 60*(1+[FREQ199045 [WOODBINE345.00]])
CHNL# 124: 60*(1+[FREQ199120 [HOPEWELL345.00]])
CHNL# 125: 60*(1+[FREQ199125 [ONSLOW 345.00]])
60.500
59.500
TIME (SECONDS)
THU, JAN 29 2009 15:50
FREQUENCY HZ

2013 WINTER PEAK STORA MIN
NS-NB=0; NB-NE=500; CBX=732; ONI=961 ONS=851
SLG FAULT ON HASTINGS END OF 7012
3C-715 FAILS, CLEARS 7012 AND 7004 IN 17 CYCLES
FILE: b03-7012_1ph_3c715-2013WP-NS-0.out
CHNL# 145: [VOLT199193 [HHWAS_138.00]]
CHNL# 144: [VOLT199165 [TUFTCOVE138.00]]
CHNL# 143: [VOLT199138 [SPRNGHILL138.00]]
CHNL# 142: [VOLT199090 [SON-TREN138.00]]
CHNL# 141: [VOLT199051 [HASTINGS138.00]]
1.2000
0.70000
0.0
1.0000
2.0000
3.0000
4.0000
5.0000
6.0000
7.0000
8.0000
9.0000
10.000
TIME (SECONDS)
THU, JAN 29 2009 15:50
138KV BUS VOLTS

2013 WINTER PEAK STORA MIN
NS-NB=0; NB-NE=500; CBX=732; ONI=961 ONS=851
SLG FAULT ON HASTINGS END OF 7012
3C-715 FAILS, CLEARS 7012 AND 7004 IN 17 CYCLES
FILE: b03-7012_1ph_3c715-2013WP-NS-0.out
CHNL# 146: [VOLT199280 [TUSKET_A138.00]]
CHNL# 139: [VOLT199200 [BRUSHY_230.00]]
CHNL# 138: [VOLT199130 [ONSLOW_230.00]]
CHNL# 137: [VOLT199050 [HASTINGS230.00]]
CHNL# 136: [VOLT199044 [PT.ACONI230.00]]
CHNL# 135: [VOLT199000 [LINGAN_230.00]]
CHNL# 140: [VOLT199240 [BWATER_A230.00]]
1.2000
0.70000
0.0
1.0000
2.0000
3.0000
4.0000
5.0000
6.0000
7.0000
8.0000
9.0000
10.000
TIME (SECONDS)
THU, JAN 29 2009 15:50
230KV BUS VOLTS

2013 WINTER PEAK STORA MIN
NS-NB=0; NB-NE=500; CBX=732; ONI=961 ONS=851
SLG FAULT ON HASTINGS END OF 7012
3C-715 FAILS, CLEARS 7012 AND 7004 IN 17 CYCLES
FILE: b03-7012_1ph_3c715-2013WP-NS-0.out
CHNL# 217: [L653NMW]
CHNL# 215: [L6503MW]
CHNL# 197: [L8003MW]
CHNL# 195: [L8004MW]
CHNL# 193: [L8001MW]
CHNL# 221: [L3001MW]
250.00
-250.0
500.00
0.0
1000.0
-1000.
0.0
1.0000
2.0000
3.0000
4.0000
5.0000
6.0000
7.0000
8.0000
9.0000
10.000
TIME (SECONDS)
THU, JAN 29 2009 15:50
LINE FLOW MW

2013 WINTER PEAK STORA MIN
NS-NB=0; NB-NE=500; CBX=732; ONI=961 ONS=851
SLG FAULT ON HASTINGS END OF 7012
3C-715 FAILS, CLEARS 7012 AND 7004 IN 17 CYCLES
FILE: b03-7012_1ph_3c715-2013WP-NS-0.out
CHNL# 153: [IR137-STATIG25.0 VOLTS]
CHNL# 152: [IR114-GLENDH138.0 VOLTS]
CHNL# 151: [IR84-DALHOHV230.0 VOLTS]
CHNL# 150: [IR82_NUTBHV69.0 VOLTS]
CHNL# 149: [IR45_AMHERTP138.0 VOLTS]
CHNL# 154: [IR141-DIGBYH69.0 VOLTS]
1.2000
0.70000
0.0
1.0000
2.0000
3.0000
4.0000
5.0000
6.0000
7.0000
8.0000
9.0000
10.000
TIME (SECONDS)
THU, JAN 29 2009 15:50
WIND BUS VOLTS

2013 WINTER PEAK STORA MIN
NS-NB=0; NB-NE=500; CBX=732; ONI=961 ONS=851
SLG FAULT ON ONSLOW END OF 7005
67N-712 FAILS, CLEARS 7005 AND 7018 IN 17 CYCLES
FILE: b04-7005_1ph_67n712-2013WP-NS-0.out
CHNL#S 20.4: [ANGL199169 [TUFTCV3 14.400] [3]] [ANGL156661 [DARL G1 22.000] [1
CHNL#S 17.4: [ANGL199086 [TRENTON613.800] [6]] [ANGL156661 [DARL G1 22.000] [1
CHNL#S 16.4: [ANGL199085 [TRENTN5 13.800] [5]] [ANGL156661 [DARL G1 22.000] [1
CHNL#S 15.4: [ANGL199061 [TMP1 STO13.800] [1]] [ANGL156661 [DARL G1 22.000] [1
CHNL#S 13.4: [ANGL199043 [ACONIG1 20.000] [1]] [ANGL156661 [DARL G1 22.000] [1
CHNL#S 11.4: [ANGL199001 [LINGAN1 14.400] [1]] [ANGL156661 [DARL G1 22.000] [1
TIME (SECONDS)
THU, JAN 29 2009 15:50
NS ANGLE

2013 WINTER PEAK STORA MIN
NS-NB=0; NB-NE=500; CBX=732; ONI=961 ONS=851
SLG FAULT ON ONSLOW END OF 7005
67N-712 FAILS, CLEARS 7005 AND 7018 IN 17 CYCLES
FILE: b04-7005_1ph_67n712-2013WP-NS-0.out
CHNL#S 10.4: [ANGL190472 [BLLDNG2 19.000] [1]] [ANGL156661 [DARL G1 22.000] [1
CHNL#S 6.4: [ANGL190456 [LEPRG1 26.000] [1]] [ANGL156661 [DARL G1 22.000] [1
CHNL#S 5.4: [ANGL190450 [MACTG1 13.800] [1]] [ANGL156661 [DARL G1 22.000] [1
CHNL#S 3.4: [ANGL126652 [RAV 3 22.000] [1]] [ANGL156661 [DARL G1 22.000] [1
CHNL#S 2.4: [ANGL101063 [MYST G7 22.000] [1]] [ANGL156661 [DARL G1 22.000] [1
CHNL#S 7.4: [ANGL190457 [C.CVG1 19.000] [1]] [ANGL156661 [DARL G1 22.000] [1
TIME (SECONDS)
THU, JAN 29 2009 15:50
"NE,NY,NB ANGLE"

2013 WINTER PEAK STORA MIN
NS-NB=0; NB-NE=500; CBX=732; ONI=961 ONS=851
SLG FAULT ON ONSLOW END OF 7005
67N-712 FAILS, CLEARS 7005 AND 7018 IN 17 CYCLES
FILE: b04-7005_1ph_67n712-2013WP-NS-0.out
CHNL# 59: [POWER199169 [TUFTCV3 14.400] [3]]
CHNL# 56: [POWER199086 [TRENTON613.800] [6]]
CHNL# 55: [POWER199085 [TRENTN5 13.800] [5]]
CHNL# 54: [POWER199061 [TMP1 STO13.800] [1]]
CHNL# 52: [POWER199043 [ACONIG1 20.000] [1]]
CHNL# 50: [POWER199001 [LINGAN1 14.400] [1]]
TIME (SECONDS)
THU, JAN 29 2009 15:50
NS MW

2013 WINTER PEAK STORA MIN
NS-NB=0; NB-NE=500; CBX=732; ONI=961 ONS=851
SLG FAULT ON ONSLOW END OF 7005
67N-712 FAILS, CLEARS 7005 AND 7018 IN 17 CYCLES
FILE: b04-7005_1ph_67n712-2013WP-NS-0.out
CHNL# 49: [POWER190472 [BLLDNG2 19.000] [1]]
CHNL# 45: [POWER190456 [LEPRG1 26.000] [1]]
CHNL# 44: [POWER190450 [MACTG1 13.800] [1]]
CHNL# 42: [POWER126652 [RAV 3 22.000] [1]]
CHNL# 41: [POWER101063 [MYST G7 22.000] [1]]
CHNL# 46: [POWER190457 [C.CVG1 19.000] [1]]
TIME (SECONDS)
THU, JAN 29 2009 15:50
"NE,NY,NB POWER"

2013 WINTER PEAK STORA MIN
NS-NB=0; NB-NE=500; CBX=732; ONI=961 ONS=851
SLG FAULT ON ONSLOW END OF 7005
67N-712 FAILS, CLEARS 7005 AND 7018 IN 17 CYCLES
FILE: b04-7005_1ph_67n712-2013WP-NS-0.out
CHNL# 119: [VARS IR141-DIGBY]
CHNL# 118: [VARS IR137-STATIA]
CHNL# 117: [VARS IR114-GLENDHU]
CHNL# 116: [VARS IR84-DALHOUSIE]
CHNL# 115: [VARS IR82_NUTTBY]
CHNL# 114: [VARS IR45_AMHERST]
TIME (SECONDS)
THU, JAN 29 2009 15:50
NS WIND MV

2013 WINTER PEAK STORA MIN
NS-NB=0; NB-NE=500; CBX=732; ONI=961 ONS=851
SLG FAULT ON ONSLOW END OF 7005
67N-712 FAILS, CLEARS 7005 AND 7018 IN 17 CYCLES
FILE: b04-7005_1ph_67n712-2013WP-NS-0.out
CHNL# 79: [POWER IR141-DIGBY]
CHNL# 78: [POWER IR137-STATIA]
CHNL# 77: [POWER IR114-GLENDHU]
CHNL# 76: [POWER IR84-DALHOUSIE]
CHNL# 75: [POWER IR82_NUTTBY]
CHNL# 74: [POWER IR45_AMHERST]
TIME (SECONDS)
THU, JAN 29 2009 15:50
NS WIND MW

2013 WINTER PEAK STORA MIN
NS-NB=0; NB-NE=500; CBX=732; ONI=961 ONS=851
SLG FAULT ON ONSLOW END OF 7005
67N-712 FAILS, CLEARS 7005 AND 7018 IN 17 CYCLES
FILE: b04-7005_1ph_67n712-2013WP-NS-0.out
CHNL# 133: [VOLT199125 [ONSLOW 345.00]]
CHNL# 132: [VOLT199120 [HOPEWELL 345.00]]
CHNL# 131: [VOLT199045 [WOODBINE345.00]]
CHNL# 130: [VOLT190320 [SALBRY 345.00]]
CHNL# 128: [VOLT190004 [KESWICK 345.00]]
CHNL# 127: [VOLT 70002 [ORRINGTN345.00]]
TIME (SECONDS)
THU, JAN 29 2009 15:50
"345KV VOLTAGE"

2013 WINTER PEAK STORA MIN
NS-NB=0; NB-NE=500; CBX=732; ONI=961 ONS=851
SLG FAULT ON ONSLOW END OF 7005
67N-712 FAILS, CLEARS 7005 AND 7018 IN 17 CYCLES
FILE: b04-7005_1ph_67n712-2013WP-NS-0.out
CHNL# 125: 60*(1+[FREQ199125 [ONSLOW 345.00]])
CHNL# 124: 60*(1+[FREQ199120 [HOPEWELL 345.00]])
CHNL# 123: 60*(1+[FREQ199045 [WOODBINE345.00]])
CHNL# 122: 60*(1+[FREQ190320 [SALBRY 345.00]])
CHNL# 121: 60*(1+[FREQ190197 [C.COVE 345.00]])
CHNL# 120: 60*(1+[FREQ 70002 [ORRINGTN345.00]])
TIME (SECONDS)
THU, JAN 29 2009 15:50
FREQUENCY HZ

2013 WINTER PEAK STORA MIN
NS-NB=0; NB-NE=500; CBX=732; ONI=961 ONS=851
SLG FAULT ON ONSLOW END OF 7005
67N-712 FAILS, CLEARS 7005 AND 7018 IN 17 CYCLES
FILE: b04-7005_1ph_67n712-2013WP-NS-0.out
CHNL# 146: [VOLT199280 [TUSKET A138.00]]
CHNL# 145: [VOLT199193 [HHWAS 138.00]]
CHNL# 144: [VOLT199165 [TUFTCOVE138.00]]
CHNL# 143: [VOLT199138 [SPRNGHLL138.00]]
CHNL# 142: [VOLT199090 [SON-TREN138.00]]
CHNL# 141: [VOLT199051 [HASTINGS138.00]]
TIME (SECONDS)
THU, JAN 29 2009 15:50
138KV BUS VOLTS

2013 WINTER PEAK STORA MIN
NS-NB=0; NB-NE=500; CBX=732; ONI=961 ONS=851
SLG FAULT ON ONSLOW END OF 7005
67N-712 FAILS, CLEARS 7005 AND 7018 IN 17 CYCLES
FILE: b04-7005_1ph_67n712-2013WP-NS-0.out
CHNL# 140: [VOLT199240 [BWATER A230.00]]
CHNL# 139: [VOLT199200 [BRUSHY 230.00]]
CHNL# 138: [VOLT199130 [ONSLOW 230.00]]
CHNL# 137: [VOLT199050 [HASTINGS230.00]]
CHNL# 136: [VOLT199044 [PT.ACONI230.00]]
CHNL# 135: [VOLT199000 [LINGAN 230.00]]
TIME (SECONDS)
THU, JAN 29 2009 15:50
230KV BUS VOLTS

2013 WINTER PEAK STORA MIN
NS-NB=0; NB-NE=500; CBX=732; ONI=961 ONS=851
SLG FAULT ON ONSLOW END OF 7005
67N-712 FAILS, CLEARS 7005 AND 7018 IN 17 CYCLES
FILE: b04-7005_1ph_67n712-2013WP-NS-0.out
CHNL# 217: [L6513NMW]
CHNL# 215: [L6503MW]
CHNL# 197: [L8003MW]
CHNL# 195: [L8004MW]
CHNL# 193: [L8001MW]
CHNL# 221: [L3001MW]
TIME (SECONDS)
THU, JAN 29 2009 15:50
LINE FLOW MW

2013 WINTER PEAK STORA MIN
NS-NB=0; NB-NE=500; CBX=732; ONI=961 ONS=851
SLG FAULT ON ONSLOW END OF 7005
67N-712 FAILS, CLEARS 7005 AND 7018 IN 17 CYCLES
FILE: b04-7005_1ph_67n712-2013WP-NS-0.out
CHNL# 154: [IR141-DIGBYH69.0 VOLTS]
CHNL# 153: [IR137-STATIG25.0 VOLTS]
CHNL# 152: [IR114-GLENDH138.0 VOLTS]
CHNL# 151: [IR84-DALHOHV230.0 VOLTS]
CHNL# 150: [IR82_NUTBHV69.0 VOLTS]
CHNL# 149: [IR45_AMHERTP138.0 VOLTS]
TIME (SECONDS)
THU, JAN 29 2009 15:50
WIND BUS VOLTS

2013 WINTER PEAK STORA MIN
NS-NB=0; NB-NE=500; CBX=732; ONI=961 ONS=851
SLG FAULT ON ONSLOW END OF 7005
67N-712 FAILS, CLEARS 7005 AND 7018 IN 17 CYCLES; SPS TRIPS
FILE: b04s-7005_1ph_67n712-2013WP-NS-0.out
CHNL# 20: [ANGL199169 [TUFTCV3 14.400] [3]] [ANGL156661 [DARL G1 22.000] [1]
CHNL# 17: [ANGL199086 [TRENTON613.800] [6]] [ANGL156661 [DARL G1 22.000] [1]
CHNL# 16: [ANGL199085 [TRENTN5 13.800] [5]] [ANGL156661 [DARL G1 22.000] [1]
CHNL# 15: [ANGL199061 [TMP1 STO13.800] [1]] [ANGL156661 [DARL G1 22.000] [1]
CHNL# 13: [ANGL199043 [ACONIG1 20.000] [1]] [ANGL156661 [DARL G1 22.000] [1]
CHNL# 11: [ANGL199001 [LINGAN1 14.400] [1]] [ANGL156661 [DARL G1 22.000] [1]
TIME (SECONDS)
THU, JAN 29 2009 15:50
NS ANGLE

2013 WINTER PEAK STORA MIN
NS-NB=0; NB-NE=500; CBX=732; ONI=961 ONS=851
SLG FAULT ON ONSLOW END OF 7005
67N-712 FAILS, CLEARS 7005 AND 7018 IN 17 CYCLES; SPS TRIPS
FILE: b04s-7005_1ph_67n712-2013WP-NS-0.out
CHNL# 10: [ANGL190472 [BLLDNG2 19.000] [1]] [ANGL156661 [DARL G1 22.000] [1]
CHNL# 6: [ANGL190456 [LEPRG1 26.000] [1]] [ANGL156661 [DARL G1 22.000] [1]
CHNL# 5: [ANGL190450 [MACTG1 13.800] [1]] [ANGL156661 [DARL G1 22.000] [1]
CHNL# 3: [ANGL126652 [RAV 3 22.000] [1]] [ANGL156661 [DARL G1 22.000] [1]
CHNL# 2: [ANGL101063 [MYST G7 22.000] [1]] [ANGL156661 [DARL G1 22.000] [1]
CHNL# 7: [ANGL190457 [C.CVG1 19.000] [1]] [ANGL156661 [DARL G1 22.000] [1]
TIME (SECONDS)
THU, JAN 29 2009 15:50
"NE,NY,NB ANGLE"

2013 WINTER PEAK STORA MIN
NS-NB=0; NB-NE=500; CBX=732; ONI=961 ONS=851
SLG FAULT ON ONSLOW END OF 7005
67N-712 FAILS, CLEARS 7005 AND 7018 IN 17 CYCLES; SPS TRIPS
FILE: b04s-7005_1ph_67n712-2013WP-NS-0.out
CHNL# 59: [POWER199169 [TUFTCV3 14.400] [3]]
CHNL# 56: [POWER199086 [TRENTON613.800] [6]]
CHNL# 55: [POWER199085 [TRENTN5 13.800] [5]]
CHNL# 54: [POWER199061 [TMP1 STO13.800] [1]]
CHNL# 52: [POWER199043 [ACONIG1 20.000] [1]]
CHNL# 50: [POWER199001 [LINGAN1 14.400] [1]]
TIME (SECONDS)
THU, JAN 29 2009 15:50
NS MW

2013 WINTER PEAK STORA MIN
NS-NB=0; NB-NE=500; CBX=732; ONI=961 ONS=851
SLG FAULT ON ONSLOW END OF 7005
67N-712 FAILS, CLEARS 7005 AND 7018 IN 17 CYCLES; SPS TRIPS
FILE: b04s-7005_1ph_67n712-2013WP-NS-0.out
CHNL# 49: [POWER190472 [BLLDNG2 19.000] [1]]
CHNL# 45: [POWER190456 [LEPRG1 26.000] [1]]
CHNL# 44: [POWER190450 [MACTG1 13.800] [1]]
CHNL# 42: [POWER126652 [RAV 3 22.000] [1]]
CHNL# 41: [POWER101063 [MYST G7 22.000] [1]]
CHNL# 46: [POWER190457 [C.CVG1 19.000] [1]]
TIME (SECONDS)
THU, JAN 29 2009 15:50
"NE,NY,NB POWER"

2013 WINTER PEAK STORA MIN
NS-NB=0; NB-NE=500; CBX=732; ONI=961 ONS=851
SLG FAULT ON ONSLOW END OF 7005
67N-712 FAILS, CLEARS 7005 AND 7018 IN 17 CYCLES; SPS TRIPS
FILE: b04s-7005_1ph_67n712-2013WP-NS-0.out
CHNL# 119: [VARS IR141-DIGBY]
CHNL# 118: [VARS IR137-STATIA]
CHNL# 117: [VARS IR114-GLENDHU]
CHNL# 116: [VARS IR84-DALHOUSIE]
CHNL# 115: [VARS IR82_NUTTBY]
CHNL# 114: [VARS IR45_AMHERST]
TIME (SECONDS)
THU, JAN 29 2009 15:50
NS WIND MV

2013 WINTER PEAK STORA MIN
NS-NB=0; NB-NE=500; CBX=732; ONI=961 ONS=851
SLG FAULT ON ONSLOW END OF 7005
67N-712 FAILS, CLEARS 7005 AND 7018 IN 17 CYCLES; SPS TRIPS
FILE: b04s-7005_1ph_67n712-2013WP-NS-0.out
CHNL# 79: [POWER IR141-DIGBY]
CHNL# 78: [POWER IR137-STATIA]
CHNL# 77: [POWER IR114-GLENDHU]
CHNL# 76: [POWER IR84-DALHOUSIE]
CHNL# 75: [POWER IR82_NUTTBY]
CHNL# 74: [POWER IR45_AMHERST]
TIME (SECONDS)
THU, JAN 29 2009 15:50
NS WIND MW

2013 WINTER PEAK STORA MIN
NS-NB=0; NB-NE=500; CBX=732; ONI=961 ONS=851
SLG FAULT ON ONSLOW END OF 7005
67N-712 FAILS, CLEARS 7005 AND 7018 IN 17 CYCLES; SPS TRIPS
FILE: b04s-7005_1ph_67n712-2013WP-NS-0.out
CHNL# 133: [VOLT199125 [ONSLOW 345.00]]
CHNL# 132: [VOLT199120 [HOPEWELL345.00]]
CHNL# 131: [VOLT199045 [WOODBINE345.00]]
CHNL# 130: [VOLT190320 [SALBRY 345.00]]
CHNL# 128: [VOLT190004 [KESWICK 345.00]]
CHNL# 127: [VOLT 70002 [ORRINGTN345.00]]
TIME (SECONDS)
THU, JAN 29 2009 15:50
"345KV VOLTAGE"

2013 WINTER PEAK STORA MIN
NS-NB=0; NB-NE=500; CBX=732; ONI=961 ONS=851
SLG FAULT ON ONSLOW END OF 7005
67N-712 FAILS, CLEARS 7005 AND 7018 IN 17 CYCLES; SPS TRIPS
FILE: b04s-7005_1ph_67n712-2013WP-NS-0.out
CHNL# 125: 60*(1+[FREQ199125 [ONSLOW 345.00]])
CHNL# 124: 60*(1+[FREQ199120 [HOPEWELL345.00]])
CHNL# 123: 60*(1+[FREQ199045 [WOODBINE345.00]])
CHNL# 122: 60*(1+[FREQ190320 [SALBRY 345.00]])
CHNL# 121: 60*(1+[FREQ190197 [C.COVE 345.00]])
CHNL# 120: 60*(1+[FREQ 70002 [ORRINGTN345.00]])
TIME (SECONDS)
THU, JAN 29 2009 15:50
FREQUENCY HZ

2013 WINTER PEAK STORA MIN
NS-NB=0; NB-NE=500; CBX=732; ONI=961 ONS=851
SLG FAULT ON ONSLOW END OF 7005
67N-712 FAILS, CLEARS 7005 AND 7018 IN 17 CYCLES; SPS TRIPS
FILE: b04s-7005_1ph_67n712-2013WP-NS-0.out
CHNL# 146: [VOLT199280 [TUSKET A138.00]]
CHNL# 145: [VOLT199193 [HHWAS 138.00]]
CHNL# 144: [VOLT199165 [TUFTCOVE138.00]]
CHNL# 143: [VOLT199138 [SPRNGHLL138.00]]
CHNL# 142: [VOLT199090 [50N-TREN138.00]]
CHNL# 141: [VOLT199051 [HASTINGS138.00]]
1.2000
0.70000
0.0
1.0000
2.0000
3.0000
4.0000
5.0000
6.0000
7.0000
8.0000
9.0000
10.000
TIME (SECONDS)
THU, JAN 29 2009 15:50
138KV BUS VOLTS

2013 WINTER PEAK STORA MIN
NS-NB=0; NB-NE=500; CBX=732; ONI=961 ONS=851
SLG FAULT ON ONSLOW END OF 7005
67N-712 FAILS, CLEARS 7005 AND 7018 IN 17 CYCLES; SPS TRIPS
FILE: b04s-7005_1ph_67n712-2013WP-NS-0.out
CHNL# 140: [VOLT199240 [BWATER A230.00]]
CHNL# 139: [VOLT199200 [BRUSHY 230.00]]
CHNL# 138: [VOLT199130 [ONSLOW 230.00]]
CHNL# 137: [VOLT199050 [HASTINGS230.00]]
CHNL# 136: [VOLT199044 [PT.ACONI230.00]]
CHNL# 135: [VOLT199000 [LINGAN 230.00]]
1.2000
0.70000
0.0
1.0000
2.0000
3.0000
4.0000
5.0000
6.0000
7.0000
8.0000
9.0000
10.000
TIME (SECONDS)
THU, JAN 29 2009 15:50
230KV BUS VOLTS

2013 WINTER PEAK STORA MIN
NS-NB=0; NB-NE=500; CBX=732; ONI=961 ONS=851
SLG FAULT ON ONSLOW END OF 7005
67N-712 FAILS, CLEARS 7005 AND 7018 IN 17 CYCLES; SPS TRIPS
FILE: b04s-7005_1ph_67n712-2013WP-NS-0.out
CHNL# 217: [L6513MW]
CHNL# 215: [L6503MW]
CHNL# 197: [L8003MW]
CHNL# 195: [L8004MW]
CHNL# 193: [L8001MW]
CHNL# 221: [L3001MW]
250.00
500.00
1000.0
0.0
-250.0
-1000.
0.0
1.0000
2.0000
3.0000
4.0000
5.0000
6.0000
7.0000
8.0000
9.0000
10.000
TIME (SECONDS)
THU, JAN 29 2009 15:50
LINE FLOW MW

2013 WINTER PEAK STORA MIN
NS-NB=0; NB-NE=500; CBX=732; ONI=961 ONS=851
SLG FAULT ON ONSLOW END OF 7005
67N-712 FAILS, CLEARS 7005 AND 7018 IN 17 CYCLES; SPS TRIPS
FILE: b04s-7005_1ph_67n712-2013WP-NS-0.out
CHNL# 154: [IR141-DIGBYH69.0 VOLTS]
CHNL# 153: [IR137-STATIG25.0 VOLTS]
CHNL# 152: [IR114-GLENDH138.0 VOLTS]
CHNL# 151: [IR84-DALHOHV230.0 VOLTS]
CHNL# 150: [IR82_NUTBHV69.0 VOLTS]
CHNL# 149: [IR45_AMHERTP138.0 VOLTS]
1.2000
0.70000
0.0
1.0000
2.0000
3.0000
4.0000
5.0000
6.0000
7.0000
8.0000
9.0000
10.000
TIME (SECONDS)
THU, JAN 29 2009 15:50
WIND BUS VOLTS

2013 WINTER PEAK STORA MIN
NS-NB=0; NB-NE=500; CBX=732; ONI=961 ONS=851
SLG FAULT ON ONSLOW END OF 8003
67N-812 FAILS, CLEARS 8003 AND 8002
FILE: b06-8003_1ph_67n812-2013WP-NS-0.out
CHNL#S 20:4: [ANGL199169 [TUFTCV3 14.400] [3]] [ANGL156661 [DARL G1 22.000] [1]
CHNL#S 17:4: [ANGL199086 [TRENTON613.800] [6]] [ANGL156661 [DARL G1 22.000] [1]
CHNL#S 16:4: [ANGL199085 [TRENTN5 13.800] [5]] [ANGL156661 [DARL G1 22.000] [1]
CHNL#S 15:4: [ANGL199061 [TMP1 STO13.800] [1]] [ANGL156661 [DARL G1 22.000] [1]
CHNL#S 13:4: [ANGL199043 [ACONIG1 20.000] [1]] [ANGL156661 [DARL G1 22.000] [1]
CHNL#S 11:4: [ANGL199001 [LINGAN1 14.400] [1]] [ANGL156661 [DARL G1 22.000] [1]
100.00
-100.0
0.0
1.0000
2.0000
3.0000
4.0000
5.0000
6.0000
7.0000
8.0000
9.0000
10.000
TIME (SECONDS)
THU, JAN 29 2009 15:50
NS ANGLE

2013 WINTER PEAK STORA MIN
NS-NB=0; NB-NE=500; CBX=732; ONI=961 ONS=851
SLG FAULT ON ONSLOW END OF 8003
67N-812 FAILS, CLEARS 8003 AND 8002
FILE: b06-8003_1ph_67n812-2013WP-NS-0.out
CHNL#S 10:4: [ANGL190472 [BLLDNG2 19.000] [1]] [ANGL156661 [DARL G1 22.000] [1]
CHNL#S 6:4: [ANGL190456 [LEPRG1 26.000] [1]] [ANGL156661 [DARL G1 22.000] [1]
CHNL#S 5:4: [ANGL190450 [MACTG1 13.800] [1]] [ANGL156661 [DARL G1 22.000] [1]
CHNL#S 3:4: [ANGL126652 [RAV 3 22.000] [1]] [ANGL156661 [DARL G1 22.000] [1]
CHNL#S 2:4: [ANGL101063 [MYST G7 22.000] [1]] [ANGL156661 [DARL G1 22.000] [1]
CHNL#S 7:4: [ANGL190457 [C.CVG1 19.000] [1]] [ANGL156661 [DARL G1 22.000] [1]
100.00
-100.0
0.0
1.0000
2.0000
3.0000
4.0000
5.0000
6.0000
7.0000
8.0000
9.0000
10.000
TIME (SECONDS)
THU, JAN 29 2009 15:50
"NE,NY,NB ANGLE"

2013 WINTER PEAK STORA MIN
NS-NB=0; NB-NE=500; CBX=732; ONI=961 ONS=851
SLG FAULT ON ONSLOW END OF 8003
67N-812 FAILS, CLEARS 8003 AND 8002
FILE: b06-8003_1ph_67n812-2013WP-NS-0.out
CHNL# 59: [POWER199169 [TUFTCV3 14.400] [3]]
CHNL# 56: [POWER199086 [TRENTON613.800] [6]]
CHNL# 55: [POWER199085 [TRENTN5 13.800] [5]]
CHNL# 54: [POWER199061 [TMP1 STO13.800] [1]]
CHNL# 52: [POWER199043 [ACONIG1 20.000] [1]]
CHNL# 50: [POWER199001 [LINGAN1 14.400] [1]]
2.5000
0.0
-1.500
1.0000
2.0000
3.0000
4.0000
5.0000
6.0000
7.0000
8.0000
9.0000
10.000
TIME (SECONDS)
THU, JAN 29 2009 15:50
NS MW

2013 WINTER PEAK STORA MIN
NS-NB=0; NB-NE=500; CBX=732; ONI=961 ONS=851
SLG FAULT ON ONSLOW END OF 8003
67N-812 FAILS, CLEARS 8003 AND 8002
FILE: b06-8003_1ph_67n812-2013WP-NS-0.out
CHNL# 49: [POWER190472 [BLLDNG2 19.000] [1]]
CHNL# 45: [POWER190456 [LEPRG1 26.000] [1]]
CHNL# 44: [POWER190450 [MACTG1 13.800] [1]]
CHNL# 42: [POWER126652 [RAV 3 22.000] [1]]
CHNL# 41: [POWER101063 [MYST G7 22.000] [1]]
CHNL# 46: [POWER190457 [C.CVG1 19.000] [1]]
7.0000
2.0000
4.0000
0.0
1.0000
5.0000
6.0000
7.0000
8.0000
9.0000
10.000
TIME (SECONDS)
THU, JAN 29 2009 15:50
"NE,NY,NB POWER"

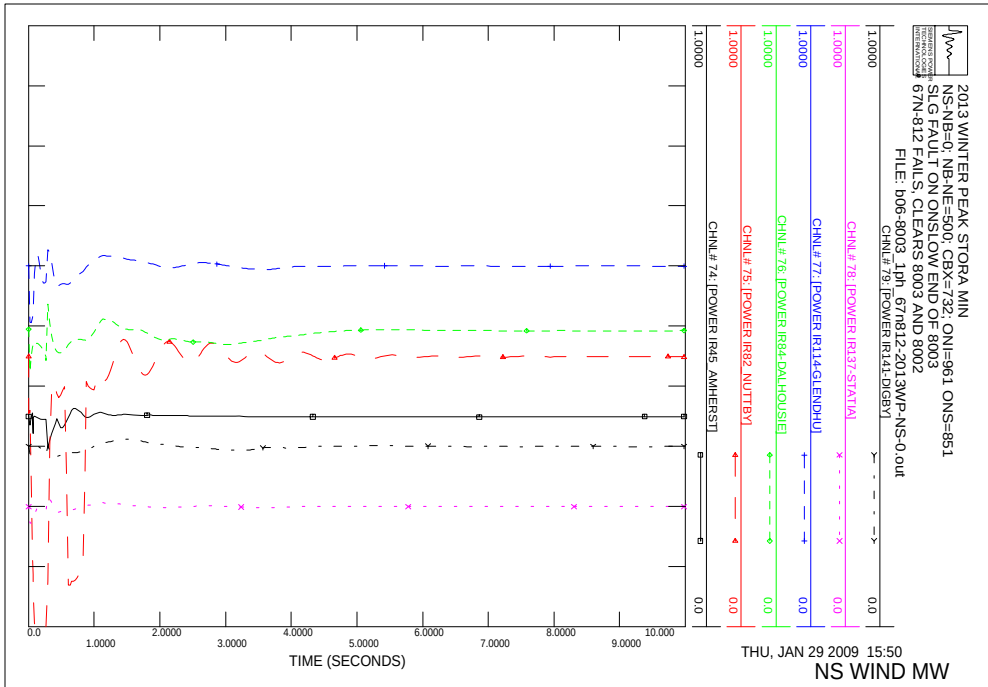
2013 WINTER PEAK STORA MIN
NS-NB=0; NB-NE=500; CBX=732; ONI=961 ONS=851
SLG FAULT ON ONSLOW END OF 8003
67N-812 FAILS, CLEARS 8003 AND 8002
FILE: b06-8003_1ph_67n812-2013WP-NS-0.out
CHNL# 74: [POWER IR45_AMHERST]
CHNL# 75: [POWER IR82_NUTTBY]
CHNL# 76: [POWER IR84-DALHOUSIE]
CHNL# 77: [POWER IR114-GLENDHU]
CHNL# 78: [POWER IR137-STATIA]
CHNL# 79: [POWER IR141-DIGBY]
TIME (SECONDS)
THU, JAN 29 2009 15:50
NS WIND MW

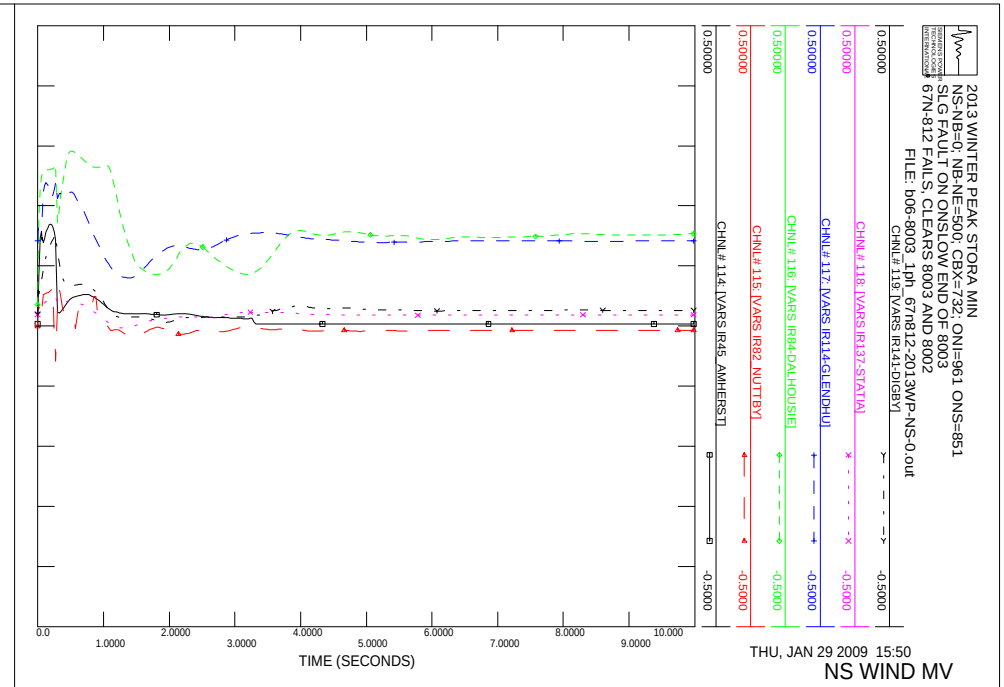
2013 WINTER PEAK STORA MIN
NS-NB=0; NB-NE=500; CBX=732; ONI=961 ONS=851
SLG FAULT ON ONSLOW END OF 8003
67N-812 FAILS, CLEARS 8003 AND 8002
FILE: b06-8003_1ph_67n812-2013WP-NS-0.out
CHNL# 114: [VARS IR45_AMHERST]
CHNL# 115: [VARS IR82_NUTTBY]
CHNL# 116: [VARS IR84-DALHOUSIE]
CHNL# 117: [VARS IR114-GLENDHU]
CHNL# 118: [VARS IR137-STATIA]
CHNL# 119: [VARS IR141-DIGBY]
TIME (SECONDS)
THU, JAN 29 2009 15:50
NS WIND MV

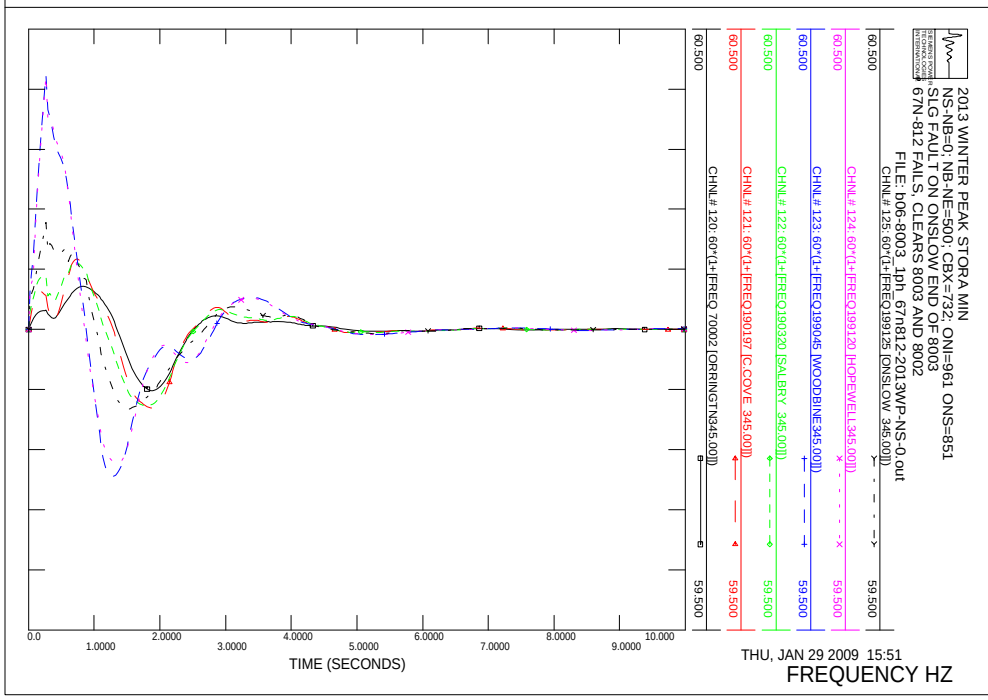
2013 WINTER PEAK STORA MIN
NS-NB=0; NB-NE=500; CBX=732; ONI=961 ONS=851
SLG FAULT ON ONSLOW END OF 8003
67N-812 FAILS, CLEARS 8003 AND 8002
FILE: b06-8003_1ph_67n812-2013WP-NS-0.out
CHNL# 120: 60*(1+[FREQ 70002 [ORRINGTN345.00]])
CHNL# 121: 60*(1+[FREQ190197 [C.COVE 345.00]])
CHNL# 122: 60*(1+[FREQ190320 [SALBRY 345.00]])
CHNL# 123: 60*(1+[FREQ199045 [WOODBINE345.00]])
CHNL# 124: 60*(1+[FREQ199120 [HOPEWELL345.00]])
CHNL# 125: 60*(1+[FREQ199125 [ONSLOW 345.00]])
TIME (SECONDS)
THU, JAN 29 2009 15:51
FREQUENCY HZ

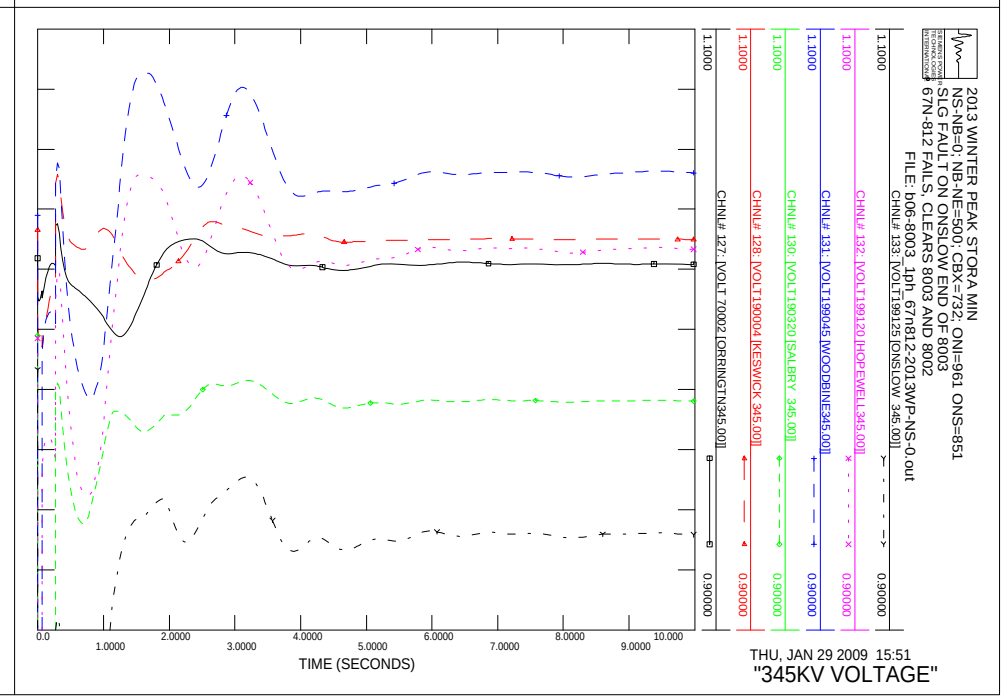
2013 WINTER PEAK STORA MIN
NS-NB=0; NB-NE=500; CBX=732; ONI=961 ONS=851
SLG FAULT ON ONSLOW END OF 8003
67N-812 FAILS, CLEARS 8003 AND 8002
FILE: b06-8003_1ph_67n812-2013WP-NS-0.out
CHNL# 127: [VOLT 70002 [ORRINGTN345.00]]
CHNL# 128: [VOLT190004 [KESWICK 345.00]]
CHNL# 130: [VOLT190320 [SALBRY 345.00]]
CHNL# 131: [VOLT199045 [WOODBINE345.00]]
CHNL# 132: [VOLT199120 [HOPEWELL345.00]]
CHNL# 133: [VOLT199125 [ONSLOW 345.00]]
TIME (SECONDS)
THU, JAN 29 2009 15:51
"345KV VOLTAGE"

2013 WINTER PEAK STORA MIN
NS-NB=0; NB-NE=500; CBX=732; ONI=961 ONS=851
SLG FAULT ON ONSLOW END OF 8003
67N-812 FAILS, CLEARS 8003 AND 8002
FILE: b06-8003_1ph_67n812-2013WP-NS-0.out
CHNL# 146: [VOLT199280 [TUSKET A138.00]]
CHNL# 145: [VOLT199193 [HHWAS 138.00]]
CHNL# 144: [VOLT199165 [TUFTCOVE138.00]]
CHNL# 143: [VOLT199138: [SPRNGHLL138.00]]
CHNL# 142: [VOLT199090 [SON-TREN138.00]]
CHNL# 141: [VOLT199051 [HASTINGS138.00]]
TIME (SECONDS)
THU, JAN 29 2009 15:51
138KV BUS VOLTS

2013 WINTER PEAK STORA MIN
NS-NB=0; NB-NE=500; CBX=732; ONI=961 ONS=851
SLG FAULT ON ONSLOW END OF 8003
67N-812 FAILS, CLEARS 8003 AND 8002
FILE: b06-8003_1ph_67n812-2013WP-NS-0.out
CHNL# 140: [VOLT199240 [BWATER A230.00]]
CHNL# 139: [VOLT199200 [BRUSHY 230.00]]
CHNL# 138: [VOLT199130 [ONSLOW 230.00]]
CHNL# 137: [VOLT199050 [HASTINGS230.00]]
CHNL# 136: [VOLT199044 [PT.ACONI230.00]]
CHNL# 135: [VOLT199000 [LINGAN 230.00]]
TIME (SECONDS)
THU, JAN 29 2009 15:51
230KV BUS VOLTS

2013 WINTER PEAK STORA MIN
NS-NB=0; NB-NE=500; CBX=732; ONI=961 ONS=851
SLG FAULT ON ONSLOW END OF 8003
67N-812 FAILS, CLEARS 8003 AND 8002
FILE: b06-8003_1ph_67n812-2013WP-NS-0.out
CHNL# 217: [L6513NMW]
CHNL# 215: [L6503MW1]
CHNL# 197: [L8003MW1]
CHNL# 195: [L8004MW1]
CHNL# 193: [L8001MW1]
CHNL# 221: [L3001MW1]
TIME (SECONDS)
THU, JAN 29 2009 15:51
LINE FLOW MW

2013 WINTER PEAK STORA MIN
NS-NB=0; NB-NE=500; CBX=732; ONI=961 ONS=851
SLG FAULT ON ONSLOW END OF 8003
67N-812 FAILS, CLEARS 8003 AND 8002
FILE: b06-8003_1ph_67n812-2013WP-NS-0.out
CHNL# 154: [IR141-DIGBYH69.0 VOLTS]
CHNL# 153: [IR137-STATIG25.0 VOLTS]
CHNL# 152: [IR114-GLENDH138.0 VOLTS]
CHNL# 151: [IR84-DALHOHV230.0 VOLTS]
CHNL# 150: [IR82 NUTBHV69.0 VOLTS]
CHNL# 149: [IR45 AMHERTP138.0 VOLTS]
TIME (SECONDS)
THU, JAN 29 2009 15:51
WIND BUS VOLTS

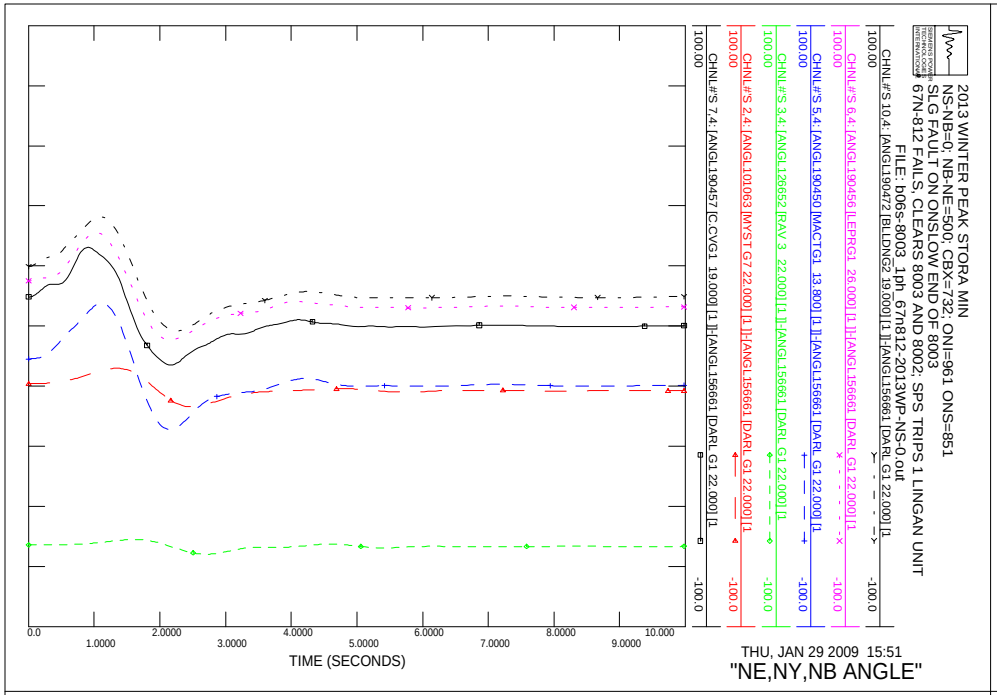
2013 WINTER PEAK STORA MIN
NS-NB=0; NB-NE=500; CBX=732; ONI=961 ONS=851
SLG FAULT ON ONSLOW END OF 8003
67N-812 FAILS, CLEARS 8003 AND 8002; SPS TRIPS 1 LINGAN UNIT
FILE: b06s-8003_1ph_67n812-2013WP-NS-0.out
CHNL#'S 10,4: [ANGL190472 [BLLDNG2 19.000] [1]]-[ANGL156661 [DARL G1 22.000] [1
CHNL#'S 6,4: [ANGL190456 [LEPRG1 26.000] [1]]-[ANGL156661 [DARL G1 22.000] [1
CHNL#'S 5,4: [ANGL190450 [MACTG1 13.800] [1]]-[ANGL156661 [DARL G1 22.000] [1
CHNL#'S 3,4: [ANGL126652 [RAV 3 22.000] [1]]-[ANGL156661 [DARL G1 22.000] [1
CHNL#'S 2,4: [ANGL101063 [MYST G7 22.000] [1]]-[ANGL156661 [DARL G1 22.000] [1
CHNL#'S 7,4: [ANGL190457 [C.CVG1 19.000] [1]]-[ANGL156661 [DARL G1 22.000] [1
TIME (SECONDS)
THU, JAN 29 2009 15:51
"NE,NY,NB ANGLE"

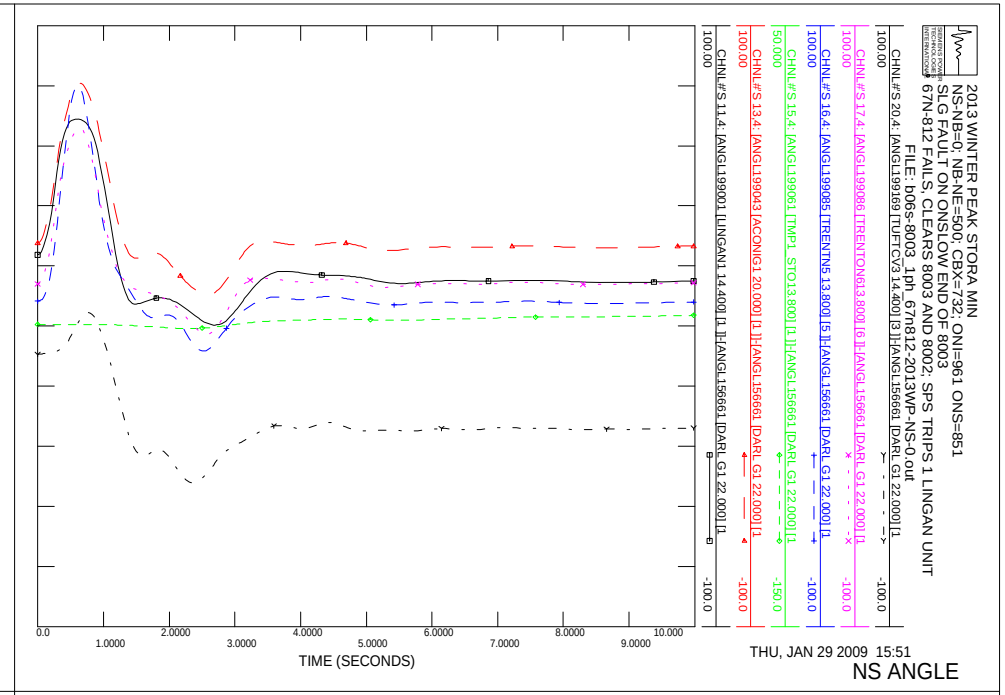
2013 WINTER PEAK STORA MIN
NS-NB=0; NB-NE=500; CBX=732; ONI=961 ONS=851
SLG FAULT ON ONSLOW END OF 8003
67N-812 FAILS, CLEARS 8003 AND 8002; SPS TRIPS 1 LINGAN UNIT
FILE: b06s-8003_1ph_67n812-2013WP-NS-0.out
CHNL#'S 20,4: [ANGL199169 [TUFTCV3 14.400] [3]]-[ANGL156661 [DARL G1 22.000] [1
CHNL#'S 17,4: [ANGL199086 [TRENTON613.800] [6]]-[ANGL156661 [DARL G1 22.000] [1
CHNL#'S 16,4: [ANGL199085 [TRENTN5 13.800] [5]]-[ANGL156661 [DARL G1 22.000] [1
CHNL#'S 15,4: [ANGL199061 [TMP1 STO13.800] [1]]-[ANGL156661 [DARL G1 22.000] [1
CHNL#'S 13,4: [ANGL199043 [ACONIG1 20.000] [1]]-[ANGL156661 [DARL G1 22.000] [1
CHNL#'S 11,4: [ANGL199001 [LINGAN1 14.400] [1]]-[ANGL156661 [DARL G1 22.000] [1
TIME (SECONDS)
THU, JAN 29 2009 15:51
NS ANGLE

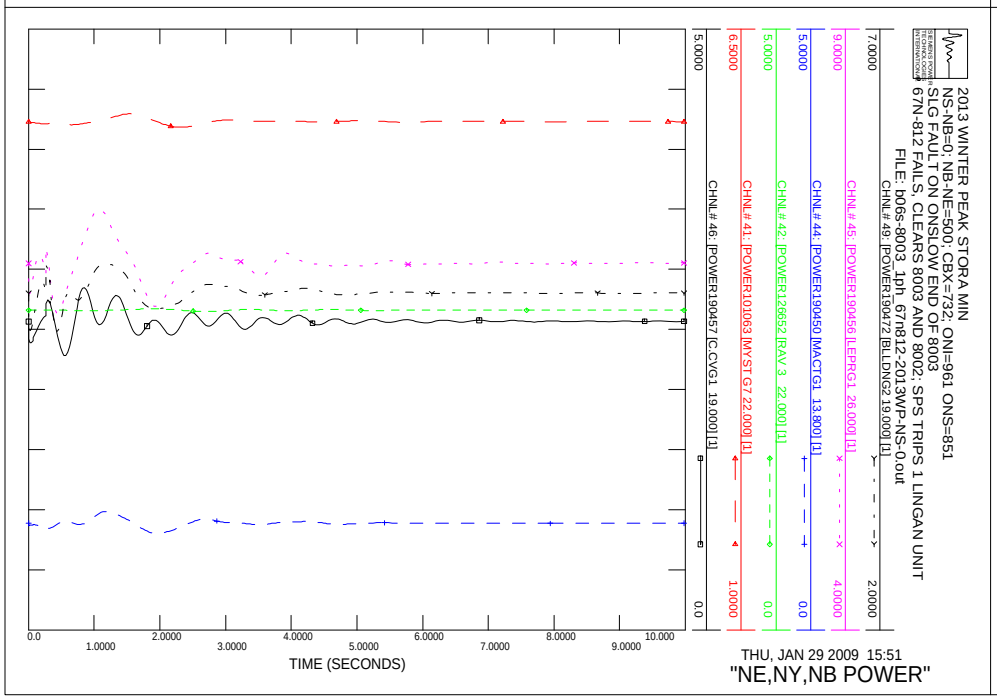
2013 WINTER PEAK STORA MIN
NS-NB=0; NB-NE=500; CBX=732; ONI=961 ONS=851
SLG FAULT ON ONSLOW END OF 8003
67N-812 FAILS, CLEARS 8003 AND 8002; SPS TRIPS 1 LINGAN UNIT
FILE: b06s-8003_1ph_67n812-2013WP-NS-0.out
CHNL# 49: [POWER190472 [BLLDNG2 19.000] [1]
CHNL# 45: [POWER190456 [LEPRG1 26.000] [1]
CHNL# 44: [POWER190450 [MACTG1 13.800] [1]
CHNL# 42: [POWER126652 [RAV 3 22.000] [1]
CHNL# 41: [POWER101063 [MYST G7 22.000] [1]
CHNL# 46: [POWER190457 [C.CVG1 19.000] [1]
TIME (SECONDS)
THU, JAN 29 2009 15:51
"NE,NY,NB POWER"

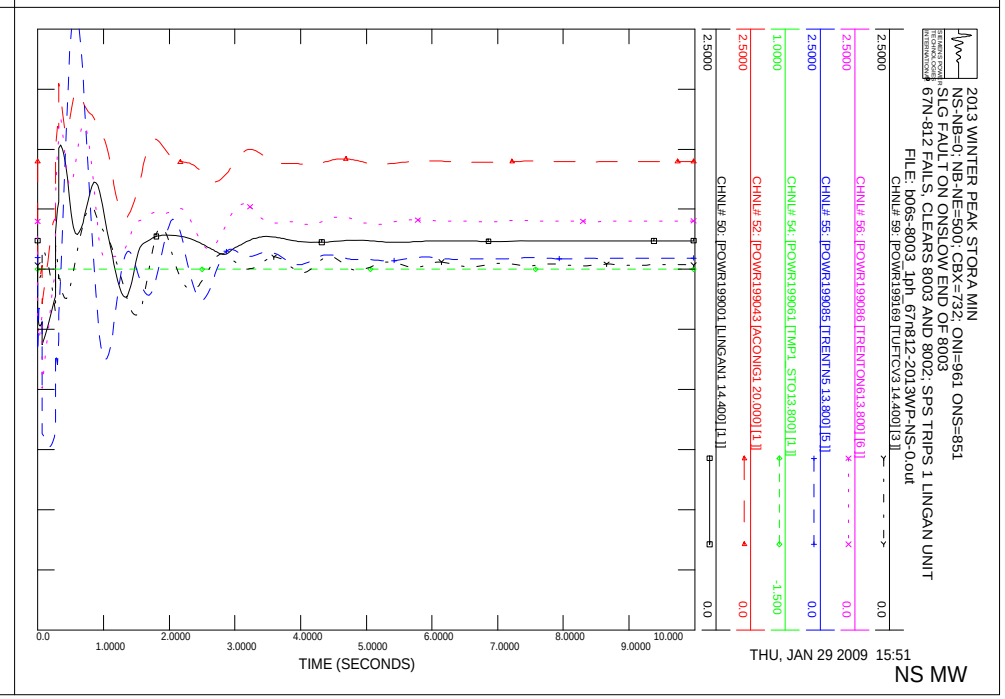
2013 WINTER PEAK STORA MIN
NS-NB=0; NB-NE=500; CBX=732; ONI=961 ONS=851
SLG FAULT ON ONSLOW END OF 8003
67N-812 FAILS, CLEARS 8003 AND 8002; SPS TRIPS 1 LINGAN UNIT
FILE: b06s-8003_1ph_67n812-2013WP-NS-0.out
CHNL# 59: [POWR199169 [TUFTCV3 14.400] [3]]
CHNL# 56: [POWR199086 [TRENTON613.800] [6]]
CHNL# 55: [POWR199085 [TRENTN5 13.800] [5]]
CHNL# 54: [POWR199061 [TMP1 STO13.800] [1]]
CHNL# 52: [POWR199043 [ACONIG1 20.000] [1]]
CHNL# 50: [POWR199001 [LINGAN1 14.400] [1]]
TIME (SECONDS)
THU, JAN 29 2009 15:51
NS MW

2013 WINTER PEAK STORA MIN
NS-NB=0; NB-NE=500; CBX=732; ONI=961 ONS=851
SLG FAULT ON ONSLOW END OF 8003
67N-812 FAILS, CLEARS 8003 AND 8002; SPS TRIPS 1 LINGAN UNIT
FILE: b06s-8003_1ph_67n812-2013WP-NS-0.out
CHNL# 119: [VARS IR141-DIGBY]
CHNL# 118: [VARS IR137-STATIA]
CHNL# 117: [VARS IR114-GLENDHU]
CHNL# 116: [VARS IR84-DALHOUSIE]
CHNL# 115: [VARS IR82_NUTTBY]
CHNL# 114: [VARS IR45_AMHERST]
0.50000
-0.5000
0.0
1.0000
2.0000
3.0000
4.0000
5.0000
6.0000
7.0000
8.0000
9.0000
10.000
TIME (SECONDS)
THU, JAN 29 2009 15:51
NS WIND MV

2013 WINTER PEAK STORA MIN
NS-NB=0; NB-NE=500; CBX=732; ONI=961 ONS=851
SLG FAULT ON ONSLOW END OF 8003
67N-812 FAILS, CLEARS 8003 AND 8002; SPS TRIPS 1 LINGAN UNIT
FILE: b06s-8003_1ph_67n812-2013WP-NS-0.out
CHNL# 79: [POWER IR141-DIGBY]
CHNL# 78: [POWER IR137-STATIA]
CHNL# 77: [POWER IR114-GLENDHU]
CHNL# 76: [POWER IR84-DALHOUSIE]
CHNL# 75: [POWER IR82_NUTTBY]
CHNL# 74: [POWER IR45_AMHERST]
1.0000
0.0
0.0
1.0000
2.0000
3.0000
4.0000
5.0000
6.0000
7.0000
8.0000
9.0000
10.000
TIME (SECONDS)
THU, JAN 29 2009 15:51
NS WIND MW

2013 WINTER PEAK STORA MIN
NS-NB=0; NB-NE=500; CBX=732; ONI=961 ONS=851
SLG FAULT ON ONSLOW END OF 8003
67N-812 FAILS, CLEARS 8003 AND 8002; SPS TRIPS 1 LINGAN UNIT
FILE: b06s-8003_1ph_67n812-2013WP-NS-0.out
CHNL# 133: [VOLT199125 [ONSLOW 345.00]]
CHNL# 132: [VOLT199120 [HOPEWELL 345.00]]
CHNL# 131: [VOLT199045 [WOODBINE345.00]]
CHNL# 130: [VOLT190320 [SALBRY 345.00]]
CHNL# 128: [VOLT190004 [KESWICK 345.00]]
CHNL# 127: [VOLT 70002 [ORRINGTN345.00]]
1.1000
0.90000
0.0
1.0000
2.0000
3.0000
4.0000
5.0000
6.0000
7.0000
8.0000
9.0000
10.000
TIME (SECONDS)
THU, JAN 29 2009 15:51
"345KV VOLTAGE"

2013 WINTER PEAK STORA MIN
NS-NB=0; NB-NE=500; CBX=732; ONI=961 ONS=851
SLG FAULT ON ONSLOW END OF 8003
67N-812 FAILS, CLEARS 8003 AND 8002; SPS TRIPS 1 LINGAN UNIT
FILE: b06s-8003_1ph_67n812-2013WP-NS-0.out
CHNL# 125: 60*(1+[FREQ199125 [ONSLOW 345.00]])
CHNL# 124: 60*(1+[FREQ199120 [HOPEWELL 345.00]])
CHNL# 123: 60*(1+[FREQ199045 [WOODBINE345.00]])
CHNL# 122: 60*(1+[FREQ190320 [SALBRY 345.00]])
CHNL# 121: 60*(1+[FREQ190197 [C.COVE 345.00]])
CHNL# 120: 60*(1+[FREQ 70002 [ORRINGTN345.00]])
60.500
59.500
0.0
1.0000
2.0000
3.0000
4.0000
5.0000
6.0000
7.0000
8.0000
9.0000
10.000
TIME (SECONDS)
THU, JAN 29 2009 15:51
FREQUENCY HZ

2013 WINTER PEAK STORA MIN
NS-NB=0; NB-NE=500; CBX=732; ONI=961 ONS=851
SLG FAULT ON ONSLOW END OF 8003
67N-812 FAILS, CLEARS 8003 AND 8002; SPS TRIPS 1 LINGAN UNIT
FILE: b06s-8003_1ph_67n812-2013WP-NS-0.out
CHNL# 146: [VOLT199280 [TUSKET A138.00]]
CHNL# 145: [VOLT199193 [HHWAS 138.00]]
CHNL# 144: [VOLT199165 [TUFTCOVE138.00]]
CHNL# 143: [VOLT199138: [SPRNGHILL138.00]]
CHNL# 142: [VOLT199090 [SON-TREN138.00]]
CHNL# 141: [VOLT199051 [HASTINGS138.00]]
1.2000
0.70000
0.0
1.0000
2.0000
3.0000
4.0000
5.0000
6.0000
7.0000
8.0000
9.0000
10.000
TIME (SECONDS)
THU, JAN 29 2009 15:51
138KV BUS VOLTS

2013 WINTER PEAK STORA MIN
NS-NB=0; NB-NE=500; CBX=732; ONI=961 ONS=851
SLG FAULT ON ONSLOW END OF 8003
67N-812 FAILS, CLEARS 8003 AND 8002; SPS TRIPS 1 LINGAN UNIT
FILE: b06s-8003_1ph_67n812-2013WP-NS-0.out
CHNL# 140: [VOLT199240 [BWATER A230.00]]
CHNL# 139: [VOLT199200 [BRUSHY 230.00]]
CHNL# 138: [VOLT199130 [ONSLOW 230.00]]
CHNL# 137: [VOLT199050 [HASTINGS230.00]]
CHNL# 136: [VOLT199044 [PT.ACONI230.00]]
CHNL# 135: [VOLT199000 [LINGAN 230.00]]
1.2000
0.70000
0.0
1.0000
2.0000
3.0000
4.0000
5.0000
6.0000
7.0000
8.0000
9.0000
10.000
TIME (SECONDS)
THU, JAN 29 2009 15:51
230KV BUS VOLTS

2013 WINTER PEAK STORA MIN
NS-NB=0; NB-NE=500; CBX=732; ONI=961 ONS=851
SLG FAULT ON ONSLOW END OF 8003
67N-812 FAILS, CLEARS 8003 AND 8002; SPS TRIPS 1 LINGAN UNIT
FILE: b06s-8003_1ph_67n812-2013WP-NS-0.out
CHNL# 217: [L6513MW]
CHNL# 215: [L6503MW]
CHNL# 197: [L8003MW]
CHNL# 195: [L8004MW]
CHNL# 193: [L8001MW]
CHNL# 221: [L3001MW]
250.00
500.00
1000.0
0.0
-250.0
-1000.
0.70000
0.0
1.0000
2.0000
3.0000
4.0000
5.0000
6.0000
7.0000
8.0000
9.0000
10.000
TIME (SECONDS)
THU, JAN 29 2009 15:51
LINE FLOW MW

2013 WINTER PEAK STORA MIN
NS-NB=0; NB-NE=500; CBX=732; ONI=961 ONS=851
SLG FAULT ON ONSLOW END OF 8003
67N-812 FAILS, CLEARS 8003 AND 8002; SPS TRIPS 1 LINGAN UNIT
FILE: b06s-8003_1ph_67n812-2013WP-NS-0.out
CHNL# 154: [IR141-DIGBYH69.0 VOLTS]
CHNL# 153: [IR137-STATIG25.0 VOLTS]
CHNL# 152: [IR114-GLENDH138.0 VOLTS]
CHNL# 151: [IR84-DALHOHV230.0 VOLTS]
CHNL# 150: [IR82_NUTBHV69.0 VOLTS]
CHNL# 149: [IR45_AMHERTP138.0 VOLTS]
1.2000
0.70000
0.0
1.0000
2.0000
3.0000
4.0000
5.0000
6.0000
7.0000
8.0000
9.0000
10.000
TIME (SECONDS)
THU, JAN 29 2009 15:51
WIND BUS VOLTS

2013 WINTER PEAK STORA MIN
NS-NB=0; NB-NE=500; CBX=732; ONI=961 ONS=851
1 PHASE FAULT ON L8004 AT HOPEWELL. BREAKER 79N-810 FAILS
BBU TRIPS 8003 IN 15 CYCLES: NO SPS
FILE: b07-pg_8004_79n_bbu-2013WP-NS-0.out
CHNL# 20: [ANGL199169 [TUFTCV3 14.400] [3]] [ANGL156661 [DARL G1 22.000] [1
CHNL# 17: [ANGL199086 [TRENTON6 13.800] [6]] [ANGL156661 [DARL G1 22.000] [1
CHNL# 16: [ANGL199085 [TRENTN5 13.800] [5]] [ANGL156661 [DARL G1 22.000] [1
CHNL# 15: [ANGL199061 [TMP1 STO 13.800] [1]] [ANGL156661 [DARL G1 22.000] [1
CHNL# 13: [ANGL199043 [ACONIG1 20.000] [1]] [ANGL156661 [DARL G1 22.000] [1
CHNL# 11: [ANGL199001 [LINGAN1 14.400] [1]] [ANGL156661 [DARL G1 22.000] [1
100.00
-100.0
50.000
-150.0
0.0
1.0000
2.0000
3.0000
4.0000
5.0000
6.0000
7.0000
8.0000
9.0000
10.000
TIME (SECONDS)
THU, JAN 29 2009 15:51
NS ANGLE

2013 WINTER PEAK STORA MIN
NS-NB=0; NB-NE=500; CBX=732; ONI=961 ONS=851
1 PHASE FAULT ON L8004 AT HOPEWELL. BREAKER 79N-810 FAILS
BBU TRIPS 8003 IN 15 CYCLES: NO SPS
FILE: b07-pg_8004_79n_bbu-2013WP-NS-0.out
CHNL# 10: [ANGL190472 [BLLDNG2 19.000] [1]] [ANGL156661 [DARL G1 22.000] [1
CHNL# 6: [ANGL190456 [LEPRG1 26.000] [1]] [ANGL156661 [DARL G1 22.000] [1
CHNL# 5: [ANGL190450 [MACTG1 13.800] [1]] [ANGL156661 [DARL G1 22.000] [1
CHNL# 3: [ANGL126652 [RAV 3 22.000] [1]] [ANGL156661 [DARL G1 22.000] [1
CHNL# 2: [ANGL101063 [MYST G7 22.000] [1]] [ANGL156661 [DARL G1 22.000] [1
CHNL# 7: [ANGL190457 [C.CVG1 19.000] [1]] [ANGL156661 [DARL G1 22.000] [1
100.00
-100.0
0.0
1.0000
2.0000
3.0000
4.0000
5.0000
6.0000
7.0000
8.0000
9.0000
10.000
TIME (SECONDS)
THU, JAN 29 2009 15:51
"NE,NY,NB ANGLE"

2013 WINTER PEAK STORA MIN
NS-NB=0; NB-NE=500; CBX=732; ONI=961 ONS=851
1 PHASE FAULT ON L8004 AT HOPEWELL. BREAKER 79N-810 FAILS
BBU TRIPS 8003 IN 15 CYCLES: NO SPS
FILE: b07-pg_8004_79n_bbu-2013WP-NS-0.out
CHNL# 59: [POWR199169 [TUFTCV3 14.400] [3]]
CHNL# 56: [POWR199086 [TRENTON6 13.800] [6]]
CHNL# 55: [POWR199085 [TRENTN5 13.800] [5]]
CHNL# 54: [POWR199061 [TMP1 STO 13.800] [1]]
CHNL# 52: [POWR199043 [ACONIG1 20.000] [1]]
CHNL# 50: [POWR199001 [LINGAN1 14.400] [1]]
2.5000
0.0
1.0000
-1.500
0.0
1.0000
2.0000
3.0000
4.0000
5.0000
6.0000
7.0000
8.0000
9.0000
10.000
TIME (SECONDS)
THU, JAN 29 2009 15:51
NS MW

2013 WINTER PEAK STORA MIN
NS-NB=0; NB-NE=500; CBX=732; ONI=961 ONS=851
1 PHASE FAULT ON L8004 AT HOPEWELL. BREAKER 79N-810 FAILS
BBU TRIPS 8003 IN 15 CYCLES: NO SPS
FILE: b07-pg_8004_79n_bbu-2013WP-NS-0.out
CHNL# 49: [POWER190472 [BLLDNG2 19.000] [1]]
CHNL# 45: [POWER190456 [LEPRG1 26.000] [1]]
CHNL# 44: [POWER190450 [MACTG1 13.800] [1]]
CHNL# 42: [POWER126652 [RAV 3 22.000] [1]]
CHNL# 41: [POWER101063 [MYST G7 22.000] [1]]
CHNL# 46: [POWER190457 [C.CVG1 19.000] [1]]
7.0000
2.0000
9.0000
4.0000
5.0000
0.0
5.0000
0.0
6.5000
1.0000
5.0000
0.0
1.0000
2.0000
3.0000
4.0000
5.0000
6.0000
7.0000
8.0000
9.0000
10.000
TIME (SECONDS)
THU, JAN 29 2009 15:51
"NE,NY,NB POWER"

2013 WINTER PEAK STORA MIN
NS-NB=0; NB-NE=500; CBX=732; ONI=961 ONS=851
1 PHASE FAULT ON L8004 AT HOPEWELL. BREAKER 79N-810 FAILS
BBU TRIPS 8003 IN 15 CYCLES: NO SPS
FILE: b07-pg_8004_79n_bbu-2013WP-NS-0.out
CHNL# 119: [VARS IR141-DIGBY]
CHNL# 118: [VARS IR137-STATIA]
CHNL# 117: [VARS IR114-GLENDHU]
CHNL# 116: [VARS IR84-DALHOUSIE]
CHNL# 115: [VARS IR82_NUTTBY]
CHNL# 114: [VARS IR45_AMHERST]
TIME (SECONDS)
THU, JAN 29 2009 15:51
NS WIND MV

2013 WINTER PEAK STORA MIN
NS-NB=0; NB-NE=500; CBX=732; ONI=961 ONS=851
1 PHASE FAULT ON L8004 AT HOPEWELL. BREAKER 79N-810 FAILS
BBU TRIPS 8003 IN 15 CYCLES: NO SPS
FILE: b07-pg_8004_79n_bbu-2013WP-NS-0.out
CHNL# 79: [POWER IR141-DIGBY]
CHNL# 78: [POWER IR137-STATIA]
CHNL# 77: [POWER IR114-GLENDHU]
CHNL# 76: [POWER IR84-DALHOUSIE]
CHNL# 75: [POWER IR82_NUTTBY]
CHNL# 74: [POWER IR45_AMHERST]
TIME (SECONDS)
THU, JAN 29 2009 15:51
NS WIND MW

2013 WINTER PEAK STORA MIN
NS-NB=0; NB-NE=500; CBX=732; ONI=961 ONS=851
1 PHASE FAULT ON L8004 AT HOPEWELL. BREAKER 79N-810 FAILS
BBU TRIPS 8003 IN 15 CYCLES: NO SPS
FILE: b07-pg_8004_79n_bbu-2013WP-NS-0.out
CHNL# 133: [VOLT199125 [ONSLOW 345.00]]
CHNL# 132: [VOLT199120 [HOPEWELL 345.00]]
CHNL# 131: [VOLT199045 [WOODBINE345.00]]
CHNL# 130: [VOLT190320 [SALBRY 345.00]]
CHNL# 128: [VOLT190004 [KESWICK 345.00]]
CHNL# 127: [VOLT 70002 [ORRINGTN345.00]]
TIME (SECONDS)
THU, JAN 29 2009 15:51
"345KV VOLTAGE"

2013 WINTER PEAK STORA MIN
NS-NB=0; NB-NE=500; CBX=732; ONI=961 ONS=851
1 PHASE FAULT ON L8004 AT HOPEWELL. BREAKER 79N-810 FAILS
BBU TRIPS 8003 IN 15 CYCLES: NO SPS
FILE: b07-pg_8004_79n_bbu-2013WP-NS-0.out
CHNL# 125: [60*(1+[FREQ199125 [ONSLOW 345.00]])]
CHNL# 124: [60*(1+[FREQ199120 [HOPEWELL 345.00]])]
CHNL# 123: [60*(1+[FREQ199045 [WOODBINE345.00]])]
CHNL# 122: [60*(1+[FREQ190320 [SALBRY 345.00]])]
CHNL# 121: [60*(1+[FREQ190197 [C.COVE 345.00]])]
CHNL# 120: [60*(1+[FREQ 70002 [ORRINGTN345.00]])]
TIME (SECONDS)
THU, JAN 29 2009 15:51
FREQUENCY HZ

2013 WINTER PEAK STORA MIN
NS-NB=0; NB-NE=500; CBX=732; ONI=961 ONS=851
1 PHASE FAULT ON L8004 AT HOPEWELL. BREAKER 79N-810 FAILS
BBU TRIPS 8003 IN 15 CYCLES: NO SPS
FILE: b07-pg_8004_79n_bbu-2013WP-NS-0.out
CHNL# 146: [VOLT199280 [TUSKET A138.00]]
CHNL# 145: [VOLT199193 [HHWAS 138.00]]
CHNL# 144: [VOLT199165 [TUFTCOVE138.00]]
CHNL# 143: [VOLT199135 [SPRNGHLL138.00]]
CHNL# 142: [VOLT199090 [50N-TREN138.00]]
CHNL# 141: [VOLT199051 [HASTINGS138.00]]
1.2000
0.70000
0.0
1.0000
2.0000
3.0000
4.0000
5.0000
6.0000
7.0000
8.0000
9.0000
10.000
TIME (SECONDS)
THU, JAN 29 2009 15:51
138KV BUS VOLTS

2013 WINTER PEAK STORA MIN
NS-NB=0; NB-NE=500; CBX=732; ONI=961 ONS=851
1 PHASE FAULT ON L8004 AT HOPEWELL. BREAKER 79N-810 FAILS
BBU TRIPS 8003 IN 15 CYCLES: NO SPS
FILE: b07-pg_8004_79n_bbu-2013WP-NS-0.out
CHNL# 140: [VOLT199240 [BWATER A230.00]]
CHNL# 139: [VOLT199200 [BRUSHY 230.00]]
CHNL# 138: [VOLT199130 [ONSLOW 230.00]]
CHNL# 137: [VOLT199050 [HASTINGS230.00]]
CHNL# 136: [VOLT199044 [PT.ACONI230.00]]
CHNL# 135: [VOLT199000 [LINGAN 230.00]]
1.2000
0.70000
0.0
1.0000
2.0000
3.0000
4.0000
5.0000
6.0000
7.0000
8.0000
9.0000
10.000
TIME (SECONDS)
THU, JAN 29 2009 15:51
230KV BUS VOLTS

2013 WINTER PEAK STORA MIN
NS-NB=0; NB-NE=500; CBX=732; ONI=961 ONS=851
1 PHASE FAULT ON L8004 AT HOPEWELL. BREAKER 79N-810 FAILS
BBU TRIPS 8003 IN 15 CYCLES: NO SPS
FILE: b07-pg_8004_79n_bbu-2013WP-NS-0.out
CHNL# 217: [L6533NMW]
CHNL# 215: [L6503MW]
CHNL# 197: [L8003MW]
CHNL# 195: [L8004MW]
CHNL# 193: [L8001MW]
CHNL# 221: [L3001MW]
250.00
500.00
1000.0
0.0
-250.0
-1000.
0.0
1.0000
2.0000
3.0000
4.0000
5.0000
6.0000
7.0000
8.0000
9.0000
10.000
TIME (SECONDS)
THU, JAN 29 2009 15:51
LINE FLOW MW

2013 WINTER PEAK STORA MIN
NS-NB=0; NB-NE=500; CBX=732; ONI=961 ONS=851
1 PHASE FAULT ON L8004 AT HOPEWELL. BREAKER 79N-810 FAILS
BBU TRIPS 8003 IN 15 CYCLES: NO SPS
FILE: b07-pg_8004_79n_bbu-2013WP-NS-0.out
CHNL# 154: [IR141-DIGBYH69.0 VOLTS]
CHNL# 153: [IR137-STATIG25.0 VOLTS]
CHNL# 152: [IR114-GLENDH138.0 VOLTS]
CHNL# 151: [IR84-DALHOHV230.0 VOLTS]
CHNL# 150: [IR82_NUTBHV69.0 VOLTS]
CHNL# 149: [IR45_ANHERTP138.0 VOLTS]
1.2000
0.70000
0.0
1.0000
2.0000
3.0000
4.0000
5.0000
6.0000
7.0000
8.0000
9.0000
10.000
TIME (SECONDS)
THU, JAN 29 2009 15:51
WIND BUS VOLTS

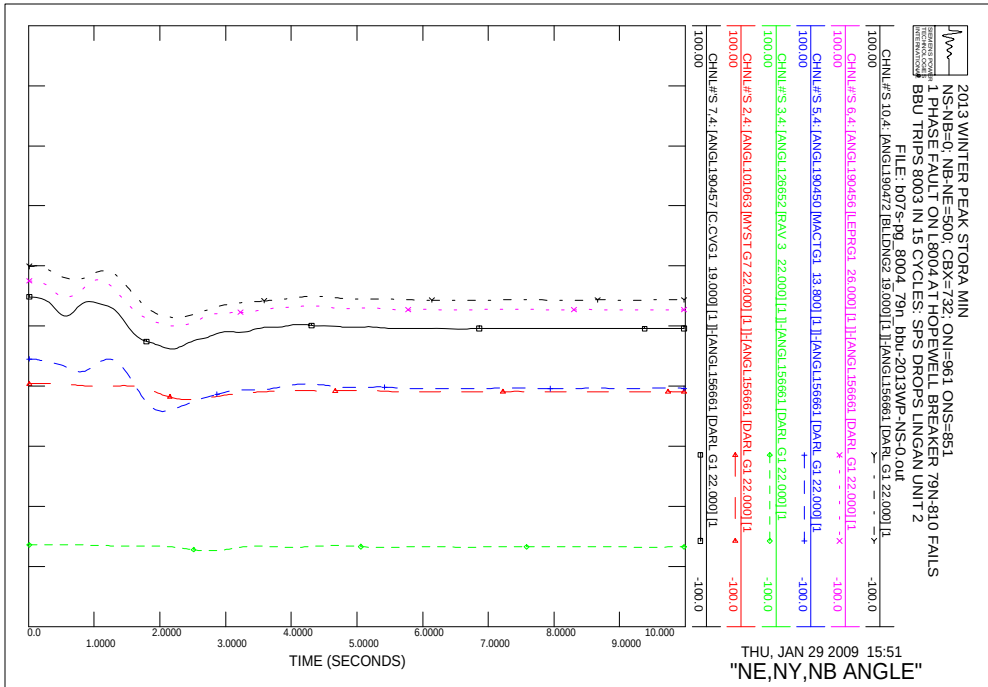
2013 WINTER PEAK STORA MIN
NS-NB=0; NB-NE=500; CBX=732; ONI=961 ONS=851
1 PHASE FAULT ON L8004 AT HOPEWELL BREAKER 79N-810 FAILS
BBU TRIPS 8003 IN 15 CYCLES: SPS DROPS LINGAN UNIT 2
FILE: b07s-pg_8004_79n_bbu-2013WP-NS-0.out
CHNL#S 10,4: [ANGL190472 [BLLDNG2 19.000] [1]]-[ANGL156661 [DARL G1 22.000] [1
CHNL#S 6,4: [ANGL190456 [LEPRG1 26.000] [1]]-[ANGL156661 [DARL G1 22.000] [1
CHNL#S 5,4: [ANGL190450 [MACTG1 13.800] [1]]-[ANGL156661 [DARL G1 22.000] [1
CHNL#S 3,4: [ANGL126652 [RAV 3 22.000] [1]]-[ANGL156661 [DARL G1 22.000] [1
CHNL#S 2,4: [ANGL101063 [MYST G7 22.000] [1]]-[ANGL156661 [DARL G1 22.000] [1
CHNL#S 7,4: [ANGL190457 [C.CVG1 19.000] [1]]-[ANGL156661 [DARL G1 22.000] [1
100.00
-100.0
TIME (SECONDS)
THU, JAN 29 2009 15:51
"NE,NY,NB ANGLE"

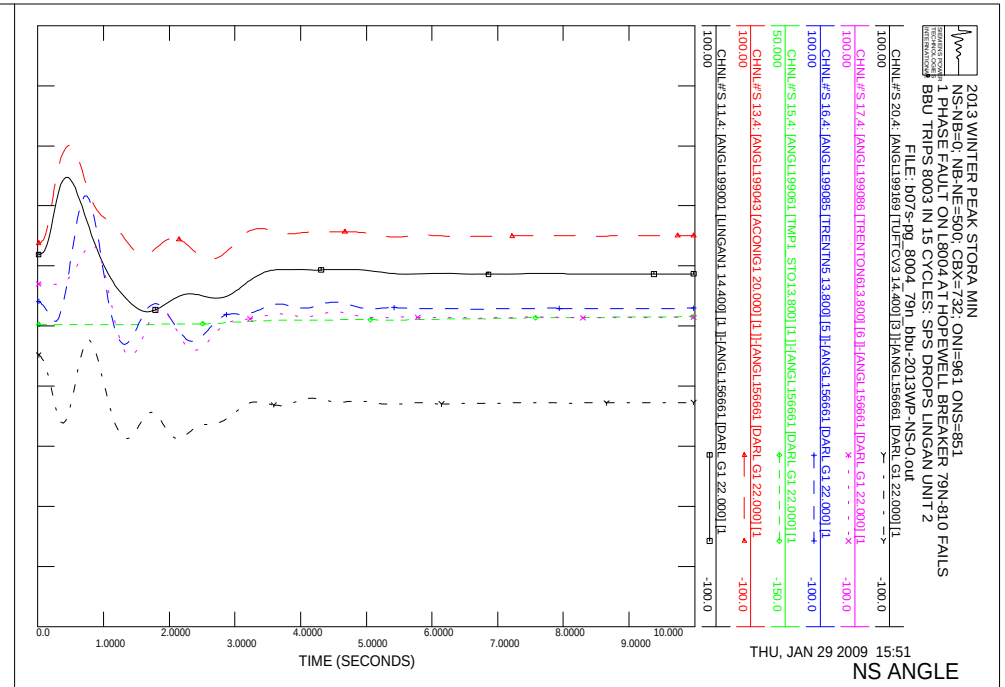
2013 WINTER PEAK STORA MIN
NS-NB=0; NB-NE=500; CBX=732; ONI=961 ONS=851
1 PHASE FAULT ON L8004 AT HOPEWELL BREAKER 79N-810 FAILS
BBU TRIPS 8003 IN 15 CYCLES: SPS DROPS LINGAN UNIT 2
FILE: b07s-pg_8004_79n_bbu-2013WP-NS-0.out
CHNL#S 20,4: [ANGL199169 [TUFTCV3 14.400] [3]]-[ANGL156661 [DARL G1 22.000] [1
CHNL#S 17,4: [ANGL199086 [TRENTON613.800] [6]]-[ANGL156661 [DARL G1 22.000] [1
CHNL#S 16,4: [ANGL199085 [TRENTN5 13.800] [5]]-[ANGL156661 [DARL G1 22.000] [1
CHNL#S 15,4: [ANGL199061 [TMP1 STO13.800] [1]]-[ANGL156661 [DARL G1 22.000] [1
CHNL#S 13,4: [ANGL199043 [ACONIG1 20.000] [1]]-[ANGL156661 [DARL G1 22.000] [1
CHNL#S 11,4: [ANGL199001 [LINGAN1 14.400] [1]]-[ANGL156661 [DARL G1 22.000] [1
100.00
-100.0
50.000
-150.0
TIME (SECONDS)
THU, JAN 29 2009 15:51
NS ANGLE

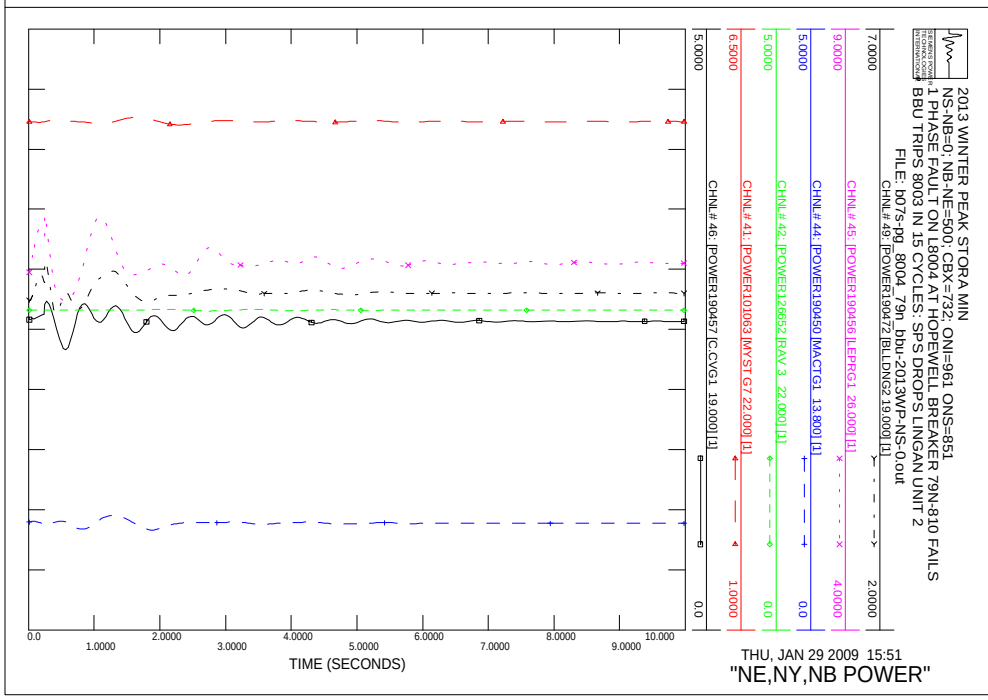
2013 WINTER PEAK STORA MIN
NS-NB=0; NB-NE=500; CBX=732; ONI=961 ONS=851
1 PHASE FAULT ON L8004 AT HOPEWELL BREAKER 79N-810 FAILS
BBU TRIPS 8003 IN 15 CYCLES: SPS DROPS LINGAN UNIT 2
FILE: b07s-pg_8004_79n_bbu-2013WP-NS-0.out
CHNL# 49: [POWER190472 [BLLDNG2 19.000] [1]
CHNL# 45: [POWER190456 [LEPRG1 26.000] [1]
CHNL# 44: [POWER190450 [MACTG1 13.800] [1]
CHNL# 42: [POWER126652 [RAV 3 22.000] [1]
CHNL# 41: [POWER101063 [MYST G7 22.000] [1]
CHNL# 46: [POWER190457 [C.CVG1 19.000] [1]
7.0000
2.0000
9.0000
4.0000
5.0000
0.0
6.5000
1.0000
TIME (SECONDS)
THU, JAN 29 2009 15:51
"NE,NY,NB POWER"

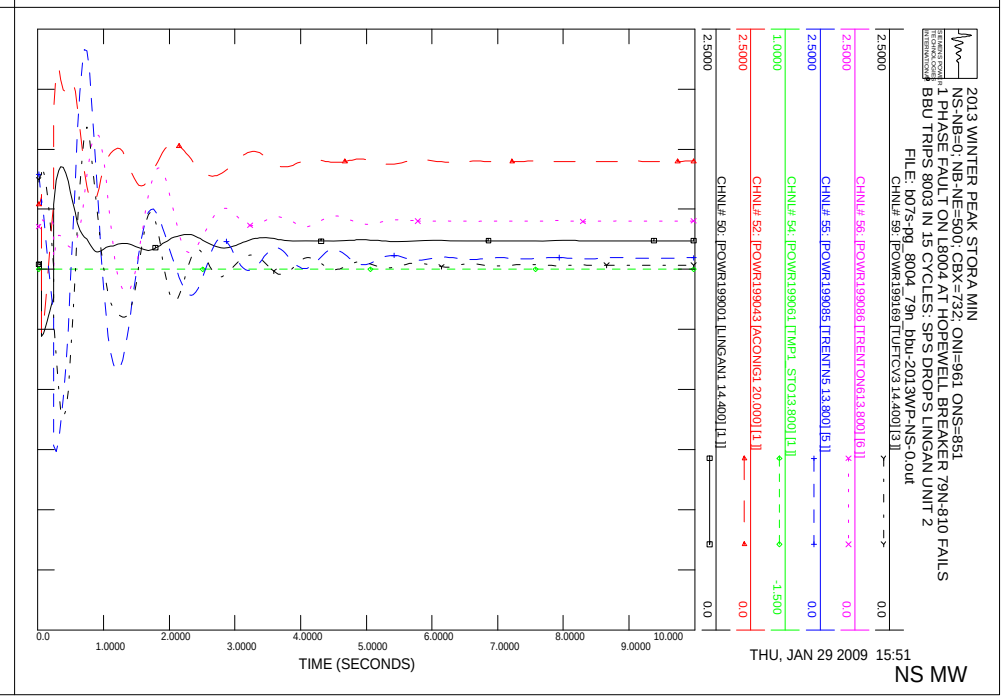
2013 WINTER PEAK STORA MIN
NS-NB=0; NB-NE=500; CBX=732; ONI=961 ONS=851
1 PHASE FAULT ON L8004 AT HOPEWELL BREAKER 79N-810 FAILS
BBU TRIPS 8003 IN 15 CYCLES: SPS DROPS LINGAN UNIT 2
FILE: b07s-pg_8004_79n_bbu-2013WP-NS-0.out
CHNL# 59: [POWR199169 [TUFTCV3 14.400] [3]]
CHNL# 56: [POWR199086 [TRENTON613.800] [6]]
CHNL# 55: [POWR199085 [TRENTN5 13.800] [5]]
CHNL# 54: [POWR199061 [TMP1 STO13.800] [1]]
CHNL# 52: [POWR199043 [ACONIG1 20.000] [1]]
CHNL# 50: [POWR199001 [LINGAN1 14.400] [1]]
2.5000
0.0
1.0000
-1.500
TIME (SECONDS)
THU, JAN 29 2009 15:51
NS MW

2013 WINTER PEAK STORA MIN
NS-NB=0; NB-NE=500; CBX=732; ONI=961 ONS=851
1 PHASE FAULT ON L8004 AT HOPEWELL BREAKER 79N-810 FAILS
BBU TRIPS 8003 IN 15 CYCLES: SPS DROPS LINGAN UNIT 2
FILE: b07s-pg_8004_79n_bbu-2013WP-NS-0.out
CHNL# 119: [VARS IR141-DIGBY]
CHNL# 118: [VARS IR137-STATIA]
CHNL# 117: [VARS IR114-GLENDHU]
CHNL# 116: [VARS IR84-DALHOUSIE]
CHNL# 115: [VARS IR82_NUTTBY]
CHNL# 114: [VARS IR45_AMHERST]
TIME (SECONDS)
THU, JAN 29 2009 15:51
NS WIND MV

2013 WINTER PEAK STORA MIN
NS-NB=0; NB-NE=500; CBX=732; ONI=961 ONS=851
1 PHASE FAULT ON L8004 AT HOPEWELL BREAKER 79N-810 FAILS
BBU TRIPS 8003 IN 15 CYCLES: SPS DROPS LINGAN UNIT 2
FILE: b07s-pg_8004_79n_bbu-2013WP-NS-0.out
CHNL# 79: [POWER IR141-DIGBY]
CHNL# 78: [POWER IR137-STATIA]
CHNL# 77: [POWER IR114-GLENDHU]
CHNL# 76: [POWER IR84-DALHOUSIE]
CHNL# 75: [POWER IR82_NUTTBY]
CHNL# 74: [POWER IR45_AMHERST]
TIME (SECONDS)
THU, JAN 29 2009 15:51
NS WIND MW

2013 WINTER PEAK STORA MIN
NS-NB=0; NB-NE=500; CBX=732; ONI=961 ONS=851
1 PHASE FAULT ON L8004 AT HOPEWELL BREAKER 79N-810 FAILS
BBU TRIPS 8003 IN 15 CYCLES: SPS DROPS LINGAN UNIT 2
FILE: b07s-pg_8004_79n_bbu-2013WP-NS-0.out
CHNL# 133: [VOLT199125 [ONSLOW 345.00]]
CHNL# 132: [VOLT199120 [HOPEWELL 345.00]]
CHNL# 131: [VOLT199045 [WOODBINE345.00]]
CHNL# 130: [VOLT190320 [SALBRY 345.00]]
CHNL# 128: [VOLT190004 [KESWICK 345.00]]
CHNL# 127: [VOLT 70002 [ORRINGTN345.00]]
TIME (SECONDS)
THU, JAN 29 2009 15:51
"345KV VOLTAGE"

2013 WINTER PEAK STORA MIN
NS-NB=0; NB-NE=500; CBX=732; ONI=961 ONS=851
1 PHASE FAULT ON L8004 AT HOPEWELL BREAKER 79N-810 FAILS
BBU TRIPS 8003 IN 15 CYCLES: SPS DROPS LINGAN UNIT 2
FILE: b07s-pg_8004_79n_bbu-2013WP-NS-0.out
CHNL# 125: 60*(1+[FREQ199125 [ONSLOW 345.00]])
CHNL# 124: 60*(1+[FREQ199120 [HOPEWELL 345.00]])
CHNL# 123: 60*(1+[FREQ199045 [WOODBINE345.00]])
CHNL# 122: 60*(1+[FREQ190320 [SALBRY 345.00]])
CHNL# 121: 60*(1+[FREQ190197 [C.COVE 345.00]])
CHNL# 120: 60*(1+[FREQ 70002 [ORRINGTN345.00]])
TIME (SECONDS)
THU, JAN 29 2009 15:51
FREQUENCY HZ

2013 WINTER PEAK STORA MIN
NS-NB=0; NB-NE=500; CBX=732; ONI=961 ONS=851
1 PHASE FAULT ON L8004 AT HOPEWELL BREAKER 79N-810 FAILS
BBU TRIPS 8003 IN 15 CYCLES: SPS DROPS LINGAN UNIT 2
FILE: b07s-pg_8004_79n_bbu-2013WP-NS-0.out
CHNL# 146: [VOLT199280 [TUSKET A138.00]]
CHNL# 145: [VOLT199193 [HWAS 138.00]]
CHNL# 144: [VOLT199165 [TUFTCOVE138.00]]
CHNL# 143: [VOLT199138 [SPRNGHLL138.00]]
CHNL# 142: [VOLT199090 [SON-TREN138.00]]
CHNL# 141: [VOLT199051 [HASTINGS138.00]]
1.2000
0.70000
0.0
1.0000
2.0000
3.0000
4.0000
5.0000
6.0000
7.0000
8.0000
9.0000
10.000
TIME (SECONDS)
THU, JAN 29 2009 15:51
138KV BUS VOLTS

2013 WINTER PEAK STORA MIN
NS-NB=0; NB-NE=500; CBX=732; ONI=961 ONS=851
1 PHASE FAULT ON L8004 AT HOPEWELL BREAKER 79N-810 FAILS
BBU TRIPS 8003 IN 15 CYCLES: SPS DROPS LINGAN UNIT 2
FILE: b07s-pg_8004_79n_bbu-2013WP-NS-0.out
CHNL# 140: [VOLT199240 [BWATER A230.00]]
CHNL# 139: [VOLT199200 [BRUSHY 230.00]]
CHNL# 138: [VOLT199130 [ONSLOW 230.00]]
CHNL# 137: [VOLT199050 [HASTINGS230.00]]
CHNL# 136: [VOLT199044 [PT.ACONI230.00]]
CHNL# 135: [VOLT199000 [LINGAN 230.00]]
1.2000
0.70000
0.0
1.0000
2.0000
3.0000
4.0000
5.0000
6.0000
7.0000
8.0000
9.0000
10.000
TIME (SECONDS)
THU, JAN 29 2009 15:51
230KV BUS VOLTS

2013 WINTER PEAK STORA MIN
NS-NB=0; NB-NE=500; CBX=732; ONI=961 ONS=851
1 PHASE FAULT ON L8004 AT HOPEWELL BREAKER 79N-810 FAILS
BBU TRIPS 8003 IN 15 CYCLES: SPS DROPS LINGAN UNIT 2
FILE: b07s-pg_8004_79n_bbu-2013WP-NS-0.out
CHNL# 217: [L6533MW]
CHNL# 215: [L6503MW]
CHNL# 197: [L8003MW]
CHNL# 195: [L8004MW]
CHNL# 193: [L8001MW]
CHNL# 221: [L3001MW]
250.00
500.00
1000.0
0.0
-250.0
-1000.
0.0
1.0000
2.0000
3.0000
4.0000
5.0000
6.0000
7.0000
8.0000
9.0000
10.000
TIME (SECONDS)
THU, JAN 29 2009 15:51
LINE FLOW MW

2013 WINTER PEAK STORA MIN
NS-NB=0; NB-NE=500; CBX=732; ONI=961 ONS=851
1 PHASE FAULT ON L8004 AT HOPEWELL BREAKER 79N-810 FAILS
BBU TRIPS 8003 IN 15 CYCLES: SPS DROPS LINGAN UNIT 2
FILE: b07s-pg_8004_79n_bbu-2013WP-NS-0.out
CHNL# 154: [IR141-DIGBYH69.0 VOLTS]
CHNL# 153: [IR137-STATIG25.0 VOLTS]
CHNL# 152: [IR114-GLENDH138.0 VOLTS]
CHNL# 151: [IR84-DALHOHV230.0 VOLTS]
CHNL# 150: [IR82_NUTBHV69.0 VOLTS]
CHNL# 149: [IR45_AMHERTP138.0 VOLTS]
1.2000
0.70000
0.0
1.0000
2.0000
3.0000
4.0000
5.0000
6.0000
7.0000
8.0000
9.0000
10.000
TIME (SECONDS)
THU, JAN 29 2009 15:51
WIND BUS VOLTS

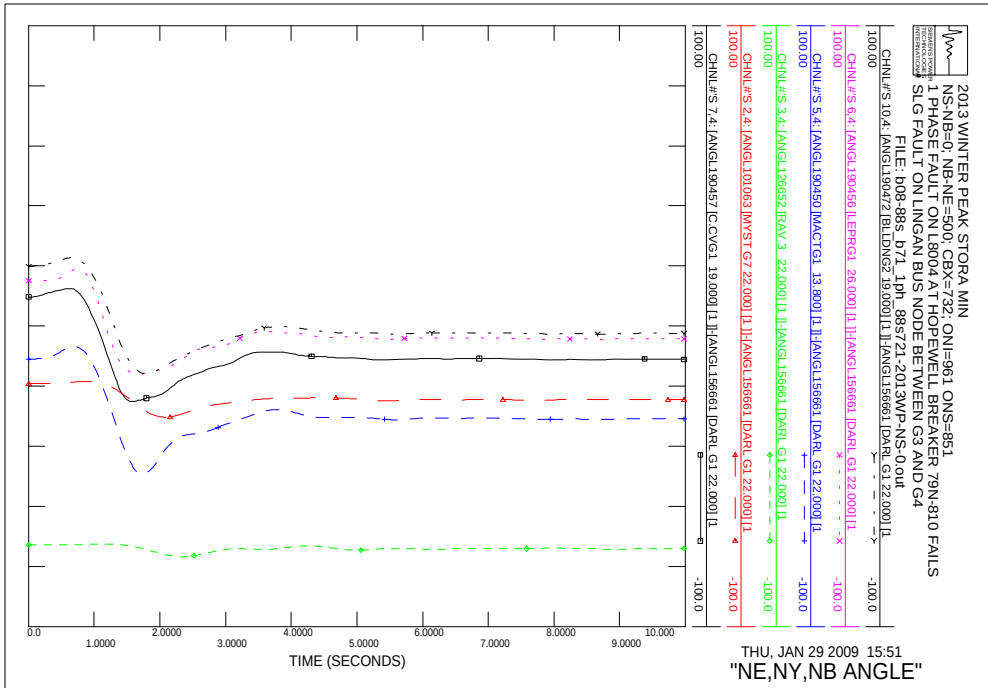
2013 WINTER PEAK STORA MIN
NS-NB=0; NB-NE=500; CBX=732; ONI=961 ONS=851
1 PHASE FAULT ON L8004 AT HOPEWELL BREAKER 79N-810 FAILS
SLG FAULT ON LINGAN BUS NODE BETWEEN G3 AND G4
FILE: b08-88s_b71_1ph_88s721-2013WP-NS-0.out
CHNL#S 10,4: [ANGL190472 [BLLDNG2 19.000] [1]]-[ANGL156661 [DARL G1 22.000] [1
CHNL#S 6,4: [ANGL190456 [LEPRG1 26.000] [1]]-[ANGL156661 [DARL G1 22.000] [1
CHNL#S 5,4: [ANGL190450 [MACTG1 13.800] [1]]-[ANGL156661 [DARL G1 22.000] [1
CHNL#S 3,4: [ANGL126652 [RAV 3 22.000] [1]]-[ANGL156661 [DARL G1 22.000] [1
CHNL#S 2,4: [ANGL101063 [MYST G7 22.000] [1]]-[ANGL156661 [DARL G1 22.000] [1
CHNL#S 7,4: [ANGL190457 [C.CVG1 19.000] [1]]-[ANGL156661 [DARL G1 22.000] [1
100.00
-100.0
TIME (SECONDS)
THU, JAN 29 2009 15:51
"NE,NY,NB ANGLE"

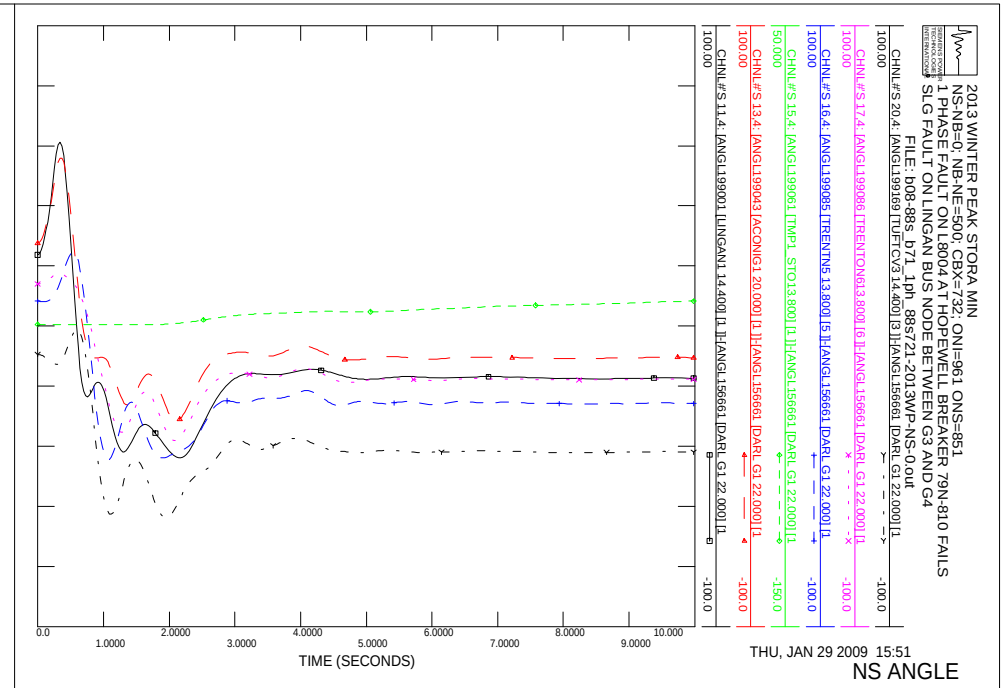
2013 WINTER PEAK STORA MIN
NS-NB=0; NB-NE=500; CBX=732; ONI=961 ONS=851
1 PHASE FAULT ON L8004 AT HOPEWELL BREAKER 79N-810 FAILS
SLG FAULT ON LINGAN BUS NODE BETWEEN G3 AND G4
FILE: b08-88s_b71_1ph_88s721-2013WP-NS-0.out
CHNL#S 20,4: [ANGL199169 [TUFTCV3 14.400] [3]]-[ANGL156661 [DARL G1 22.000] [1
CHNL#S 17,4: [ANGL199086 [TRENTON613.800] [6]]-[ANGL156661 [DARL G1 22.000] [1
CHNL#S 16,4: [ANGL199085 [TRENTN5 13.800] [5]]-[ANGL156661 [DARL G1 22.000] [1
CHNL#S 15,4: [ANGL199061 [TMP1 STO13.800] [1]]-[ANGL156661 [DARL G1 22.000] [1
CHNL#S 13,4: [ANGL199043 [ACONIG1 20.000] [1]]-[ANGL156661 [DARL G1 22.000] [1
CHNL#S 11,4: [ANGL199001 [LINGAN1 14.400] [1]]-[ANGL156661 [DARL G1 22.000] [1
100.00
-100.0
TIME (SECONDS)
THU, JAN 29 2009 15:51
NS ANGLE

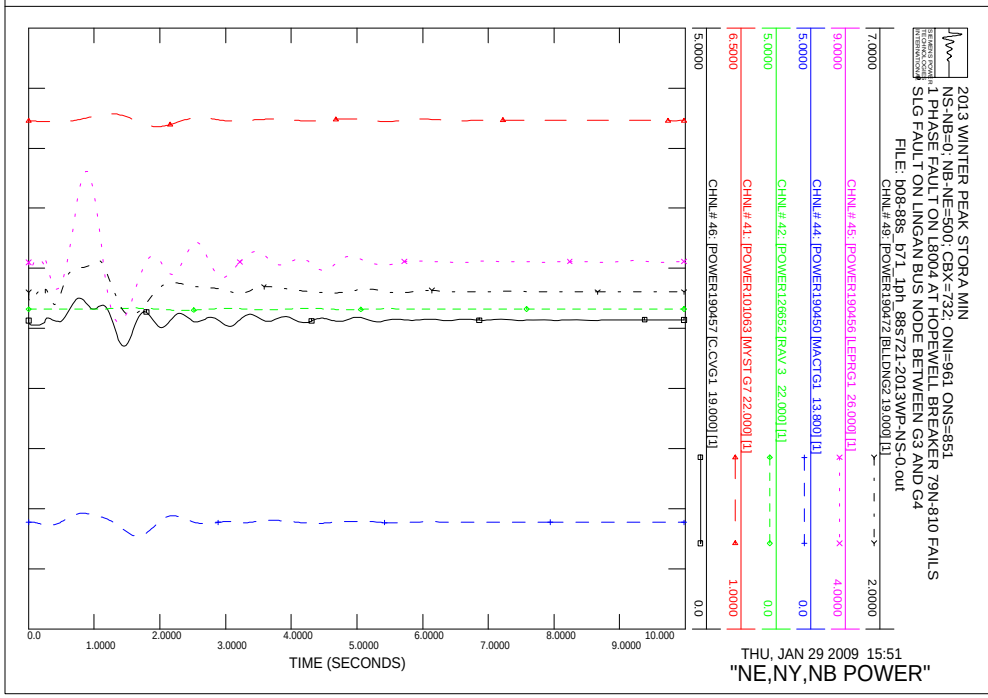
2013 WINTER PEAK STORA MIN
NS-NB=0; NB-NE=500; CBX=732; ONI=961 ONS=851
1 PHASE FAULT ON L8004 AT HOPEWELL BREAKER 79N-810 FAILS
SLG FAULT ON LINGAN BUS NODE BETWEEN G3 AND G4
FILE: b08-88s_b71_1ph_88s721-2013WP-NS-0.out
CHNL# 49: [POWER190472 [BLLDNG2 19.000] [1]
CHNL# 45: [POWER190456 [LEPRG1 26.000] [1]
CHNL# 44: [POWER190450 [MACTG1 13.800] [1]
CHNL# 42: [POWER126652 [RAV 3 22.000] [1]
CHNL# 41: [POWER101063 [MYST G7 22.000] [1]
CHNL# 46: [POWER190457 [C.CVG1 19.000] [1]
7.0000
2.0000
9.0000
4.0000
5.0000
0.0
6.5000
1.0000
TIME (SECONDS)
THU, JAN 29 2009 15:51
"NE,NY,NB POWER"

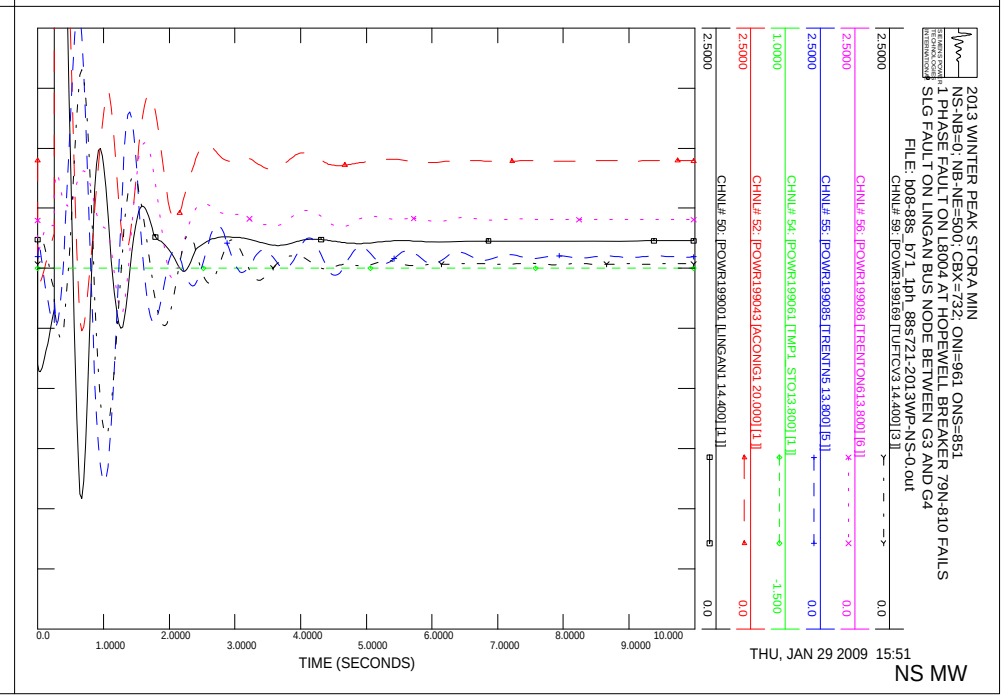
2013 WINTER PEAK STORA MIN
NS-NB=0; NB-NE=500; CBX=732; ONI=961 ONS=851
1 PHASE FAULT ON L8004 AT HOPEWELL BREAKER 79N-810 FAILS
SLG FAULT ON LINGAN BUS NODE BETWEEN G3 AND G4
FILE: b08-88s_b71_1ph_88s721-2013WP-NS-0.out
CHNL# 59: [POWR199169 [TUFTCV3 14.400] [3]]
CHNL# 56: [POWR199086 [TRENTON613.800] [6]]
CHNL# 55: [POWR199085 [TRENTN5 13.800] [5]]
CHNL# 54: [POWR199061 [TMP1 STO13.800] [1]]
CHNL# 52: [POWR199043 [ACONIG1 20.000] [1]]
CHNL# 50: [POWR199001 [LINGAN1 14.400] [1]]
2.5000
0.0
1.0000
-1.500
TIME (SECONDS)
THU, JAN 29 2009 15:51
NS MW

2013 WINTER PEAK STORA MIN
NS-NB=0; NB-NE=500; CBX=732; ONI=961 ONS=851
1 PHASE FAULT ON L8004 AT HOPEWELL BREAKER 79N-810 FAILS
SLG FAULT ON LINGAN BUS NODE BETWEEN G3 AND G4
FILE: b08-88s_b71_1ph_88s721-2013WP-NS-0.out
CHNL# 119: [VARS IR141-DIGBY]
CHNL# 118: [VARS IR137-STATIA]
CHNL# 117: [VARS IR114-GLENDHU]
CHNL# 116: [VARS IR84-DALHOUSIE]
CHNL# 115: [VARS IR82_NUTTBY]
CHNL# 114: [VARS IR45_AMHERST]
TIME (SECONDS)
THU, JAN 29 2009 15:51
NS WIND MV

2013 WINTER PEAK STORA MIN
NS-NB=0; NB-NE=500; CBX=732; ONI=961 ONS=851
1 PHASE FAULT ON L8004 AT HOPEWELL BREAKER 79N-810 FAILS
SLG FAULT ON LINGAN BUS NODE BETWEEN G3 AND G4
FILE: b08-88s_b71_1ph_88s721-2013WP-NS-0.out
CHNL# 79: [POWER IR141-DIGBY]
CHNL# 78: [POWER IR137-STATIA]
CHNL# 77: [POWER IR114-GLENDHU]
CHNL# 76: [POWER IR84-DALHOUSIE]
CHNL# 75: [POWER IR82_NUTTBY]
CHNL# 74: [POWER IR45_AMHERST]
TIME (SECONDS)
THU, JAN 29 2009 15:51
NS WIND MW

2013 WINTER PEAK STORA MIN
NS-NB=0; NB-NE=500; CBX=732; ONI=961 ONS=851
1 PHASE FAULT ON L8004 AT HOPEWELL BREAKER 79N-810 FAILS
SLG FAULT ON LINGAN BUS NODE BETWEEN G3 AND G4
FILE: b08-88s_b71_1ph_88s721-2013WP-NS-0.out
CHNL# 133: [VOLT199125 IONSLOW 345.00]
CHNL# 132: [VOLT199120 IHOPEWELL345.00]
CHNL# 131: [VOLT199045 IWOODBINE345.00]
CHNL# 130: [VOLT190320 ISALBRY 345.00]
CHNL# 128: [VOLT190004 IKESWICK 345.00]
CHNL# 127: [VOLT 70002 IORRINGTN345.00]
TIME (SECONDS)
THU, JAN 29 2009 15:51
"345KV VOLTAGE"

2013 WINTER PEAK STORA MIN
NS-NB=0; NB-NE=500; CBX=732; ONI=961 ONS=851
1 PHASE FAULT ON L8004 AT HOPEWELL BREAKER 79N-810 FAILS
SLG FAULT ON LINGAN BUS NODE BETWEEN G3 AND G4
FILE: b08-88s_b71_1ph_88s721-2013WP-NS-0.out
CHNL# 125: 60*(1+[FREQ199125 IONSLOW 345.00])
CHNL# 124: 60*(1+[FREQ199120 IHOPEWELL345.00])
CHNL# 123: 60*(1+[FREQ199045 IWOODBINE345.00])
CHNL# 122: 60*(1+[FREQ190320 ISALBRY 345.00])
CHNL# 121: 60*(1+[FREQ190197 IC.COVE 345.00])
CHNL# 120: 60*(1+[FREQ 70002 IORRINGTN345.00])
TIME (SECONDS)
THU, JAN 29 2009 15:51
FREQUENCY HZ

2013 WINTER PEAK STORA MIN
NS-NB=0; NB-NE=500; CBX=732; ONI=961 ONS=851
1 PHASE FAULT ON L8004 AT HOPEWELL BREAKER 79N-810 FAILS
SLG FAULT ON LINGAN BUS NODE BETWEEN G3 AND G4
FILE: b08-88s_b71_1ph_88s721-2013WP-NS-0.out
CHNL# 145: [VOLT199193 [HWAS 138.00]]
CHNL# 144: [VOLT199165 [TUFTCOVE138.00]]
CHNL# 143: [VOLT199138 [SPRNGHIL138.00]]
CHNL# 142: [VOLT199090 [SON-TREN138.00]]
CHNL# 141: [VOLT199051 [HASTINGS138.00]]
CHNL# 146: [VOLT199280 [TUSKET A138.00]]
1.2000
0.70000
0.0
1.0000
2.0000
3.0000
4.0000
5.0000
6.0000
7.0000
8.0000
9.0000
10.000
TIME (SECONDS)
THU, JAN 29 2009 15:51
138KV BUS VOLTS

2013 WINTER PEAK STORA MIN
NS-NB=0; NB-NE=500; CBX=732; ONI=961 ONS=851
1 PHASE FAULT ON L8004 AT HOPEWELL BREAKER 79N-810 FAILS
SLG FAULT ON LINGAN BUS NODE BETWEEN G3 AND G4
FILE: b08-88s_b71_1ph_88s721-2013WP-NS-0.out
CHNL# 139: [VOLT199200 [BRUSHY 230.00]]
CHNL# 138: [VOLT199130 [ONSLOW 230.00]]
CHNL# 137: [VOLT199050 [HASTINGS230.00]]
CHNL# 136: [VOLT199044 [PT.ACONI230.00]]
CHNL# 135: [VOLT199000 [LINGAN 230.00]]
CHNL# 140: [VOLT199240 [BWATER A230.00]]
1.2000
0.70000
0.0
1.0000
2.0000
3.0000
4.0000
5.0000
6.0000
7.0000
8.0000
9.0000
10.000
TIME (SECONDS)
THU, JAN 29 2009 15:51
230KV BUS VOLTS

2013 WINTER PEAK STORA MIN
NS-NB=0; NB-NE=500; CBX=732; ONI=961 ONS=851
1 PHASE FAULT ON L8004 AT HOPEWELL BREAKER 79N-810 FAILS
SLG FAULT ON LINGAN BUS NODE BETWEEN G3 AND G4
FILE: b08-88s_b71_1ph_88s721-2013WP-NS-0.out
CHNL# 195: [L8004MW1]
CHNL# 193: [L8001MW1]
CHNL# 197: [L8003MW1]
CHNL# 215: [L6503MW1]
CHNL# 221: [L3001MW1]
CHNL# 217: [L6533MW1]
250.00
-250.0
500.00
0.0
1000.0
-1000.
0.0
1.0000
2.0000
3.0000
4.0000
5.0000
6.0000
7.0000
8.0000
9.0000
10.000
TIME (SECONDS)
THU, JAN 29 2009 15:51
LINE FLOW MW

2013 WINTER PEAK STORA MIN
NS-NB=0; NB-NE=500; CBX=732; ONI=961 ONS=851
1 PHASE FAULT ON L8004 AT HOPEWELL BREAKER 79N-810 FAILS
SLG FAULT ON LINGAN BUS NODE BETWEEN G3 AND G4
FILE: b08-88s_b71_1ph_88s721-2013WP-NS-0.out
CHNL# 153: [IR137-STATIG25.0 VOLTS]
CHNL# 152: [IR114-GLENDH138.0 VOLTS]
CHNL# 151: [IR84-DALHOHV230.0 VOLTS]
CHNL# 150: [IR82_NUTBHV69.0 VOLTS]
CHNL# 149: [IR45_AMHERTP138.0 VOLTS]
CHNL# 154: [IR141-DIGBYH69.0 VOLTS]
1.2000
0.70000
0.0
1.0000
2.0000
3.0000
4.0000
5.0000
6.0000
7.0000
8.0000
9.0000
10.000
TIME (SECONDS)
THU, JAN 29 2009 15:51
WIND BUS VOLTS

2013 WINTER PEAK STORA MIN
NS-NB=0; NB-NE=500; CBX=732; ONI=961 ONS=851
1 PHASE FAULT ON L8001 AT ONSLOW BREAKER 67N-815 FAILS;
BBU TRIPS 67N-T82 IN 15 CYCLES; NO SPS
FILE: b09-pg_8001_67n_815_bbu-2013WP-NS-0.out
CHNL#'S 20:4 [ANGL199169 [TUFTCV3 14.400] [3]] [ANGL156661 [DARL G1 22.000] [1]
CHNL#'S 17:4 [ANGL199086 [TRENTON613.800] [6]] [ANGL156661 [DARL G1 22.000] [1]
CHNL#'S 16:4 [ANGL199085 [TRENTN5 13.800] [5]] [ANGL156661 [DARL G1 22.000] [1]
CHNL#'S 15:4 [ANGL199061 [TMP1 STO13.800] [1]] [ANGL156661 [DARL G1 22.000] [1]
CHNL#'S 13:4 [ANGL199043 [ACONIG1 20.000] [1]] [ANGL156661 [DARL G1 22.000] [1]
CHNL#'S 11:4 [ANGL199001 [LINGAN1 14.400] [1]] [ANGL156661 [DARL G1 22.000] [1]
100.00
-100.0
50.000
-150.0
0.0
1.0000
2.0000
3.0000
4.0000
5.0000
6.0000
7.0000
8.0000
9.0000
10.000
TIME (SECONDS)
THU, JAN 29 2009 15:51
NS ANGLE

2013 WINTER PEAK STORA MIN
NS-NB=0; NB-NE=500; CBX=732; ONI=961 ONS=851
1 PHASE FAULT ON L8001 AT ONSLOW BREAKER 67N-815 FAILS;
BBU TRIPS 67N-T82 IN 15 CYCLES; NO SPS
FILE: b09-pg_8001_67n_815_bbu-2013WP-NS-0.out
CHNL#'S 10:4 [ANGL190472 [BLLDNG2 19.000] [1]] [ANGL156661 [DARL G1 22.000] [1]
CHNL#'S 6:4 [ANGL190456 [LEPRG1 26.000] [1]] [ANGL156661 [DARL G1 22.000] [1]
CHNL#'S 5:4 [ANGL190450 [MACTG1 13.800] [1]] [ANGL156661 [DARL G1 22.000] [1]
CHNL#'S 3:4 [ANGL126652 [RAV 3 22.000] [1]] [ANGL156661 [DARL G1 22.000] [1]
CHNL#'S 2:4 [ANGL101063 [MYST G7 22.000] [1]] [ANGL156661 [DARL G1 22.000] [1]
CHNL#'S 7:4 [ANGL190457 [C.CVG1 19.000] [1]] [ANGL156661 [DARL G1 22.000] [1]
100.00
-100.0
0.0
1.0000
2.0000
3.0000
4.0000
5.0000
6.0000
7.0000
8.0000
9.0000
10.000
TIME (SECONDS)
THU, JAN 29 2009 15:51
"NE,NY,NB ANGLE"

2013 WINTER PEAK STORA MIN
NS-NB=0; NB-NE=500; CBX=732; ONI=961 ONS=851
1 PHASE FAULT ON L8001 AT ONSLOW BREAKER 67N-815 FAILS;
BBU TRIPS 67N-T82 IN 15 CYCLES; NO SPS
FILE: b09-pg_8001_67n_815_bbu-2013WP-NS-0.out
CHNL# 59: [POWER199169 [TUFTCV3 14.400] [3]]
CHNL# 56: [POWER199086 [TRENTON613.800] [6]]
CHNL# 55: [POWER199085 [TRENTN5 13.800] [5]]
CHNL# 54: [POWER199061 [TMP1 STO13.800] [1]]
CHNL# 52: [POWER199043 [ACONIG1 20.000] [1]]
CHNL# 50: [POWER199001 [LINGAN1 14.400] [1]]
2.5000
1.0000
-1.500
0.0
0.0
1.0000
2.0000
3.0000
4.0000
5.0000
6.0000
7.0000
8.0000
9.0000
10.000
TIME (SECONDS)
THU, JAN 29 2009 15:51
NS MW

2013 WINTER PEAK STORA MIN
NS-NB=0; NB-NE=500; CBX=732; ONI=961 ONS=851
1 PHASE FAULT ON L8001 AT ONSLOW BREAKER 67N-815 FAILS;
BBU TRIPS 67N-T82 IN 15 CYCLES; NO SPS
FILE: b09-pg_8001_67n_815_bbu-2013WP-NS-0.out
CHNL# 49: [POWER190472 [BLLDNG2 19.000] [1]]
CHNL# 45: [POWER190456 [LEPRG1 26.000] [1]]
CHNL# 44: [POWER190450 [MACTG1 13.800] [1]]
CHNL# 42: [POWER126652 [RAV 3 22.000] [1]]
CHNL# 41: [POWER101063 [MYST G7 22.000] [1]]
CHNL# 46: [POWER190457 [C.CVG1 19.000] [1]]
7.0000
9.0000
5.0000
5.0000
6.5000
5.0000
2.0000
4.0000
0.0
0.0
1.0000
0.0
0.0
1.0000
2.0000
3.0000
4.0000
5.0000
6.0000
7.0000
8.0000
9.0000
10.000
TIME (SECONDS)
THU, JAN 29 2009 15:51
"NE,NY,NB POWER"

NS WIND MV

NS WIND MW

"345KV VOLTAGE"

FREQUENCY HZ

2013 WINTER PEAK STORA MIN
NS-NB=0; NB-NE=500; CBX=732; ONI=961 ONS=851
1 PHASE FAULT ON L8001 AT ONSLOW BREAKER 67N-815 FAILS;
BBU TRIPS 67N-T82 IN 15 CYCLES; NO SPS
FILE: b09-pg_8001_67n_815_bbu-2013WP-NS-0.out
CHNL# 146: [VOLT199280 [TUSKET A138.00]]
CHNL# 145: [VOLT199193 [HHWAS 138.00]]
CHNL# 144: [VOLT199165 [TUFTCOVE138.00]]
CHNL# 143: [VOLT199138 [SPRNGHLL138.00]]
CHNL# 142: [VOLT199090 [SON-TREN138.00]]
CHNL# 141: [VOLT199051 [HASTINGS138.00]]
1.2000
0.70000
0.0
1.0000
2.0000
3.0000
4.0000
5.0000
6.0000
7.0000
8.0000
9.0000
10.000
TIME (SECONDS)
THU, JAN 29 2009 15:51
138KV BUS VOLTS

2013 WINTER PEAK STORA MIN
NS-NB=0; NB-NE=500; CBX=732; ONI=961 ONS=851
1 PHASE FAULT ON L8001 AT ONSLOW BREAKER 67N-815 FAILS;
BBU TRIPS 67N-T82 IN 15 CYCLES; NO SPS
FILE: b09-pg_8001_67n_815_bbu-2013WP-NS-0.out
CHNL# 140: [VOLT199240 [BWATER A230.00]]
CHNL# 139: [VOLT199200 [BRUSHY 230.00]]
CHNL# 138: [VOLT199130 [ONSLOW 230.00]]
CHNL# 137: [VOLT199050 [HASTINGS230.00]]
CHNL# 136: [VOLT199044 [PT.ACONI230.00]]
CHNL# 135: [VOLT199000 [LINGAN 230.00]]
1.2000
0.70000
0.0
1.0000
2.0000
3.0000
4.0000
5.0000
6.0000
7.0000
8.0000
9.0000
10.000
TIME (SECONDS)
THU, JAN 29 2009 15:51
230KV BUS VOLTS

2013 WINTER PEAK STORA MIN
NS-NB=0; NB-NE=500; CBX=732; ONI=961 ONS=851
1 PHASE FAULT ON L8001 AT ONSLOW BREAKER 67N-815 FAILS;
BBU TRIPS 67N-T82 IN 15 CYCLES; NO SPS
FILE: b09-pg_8001_67n_815_bbu-2013WP-NS-0.out
CHNL# 217: [L6533MW]
CHNL# 215: [L6503MW]
CHNL# 197: [L8003MW]
CHNL# 195: [L8004MW]
CHNL# 193: [L8001MW]
CHNL# 221: [L3001MW]
250.00
500.00
1000.0
0.0
-250.0
-1000.
0.0
1.0000
2.0000
3.0000
4.0000
5.0000
6.0000
7.0000
8.0000
9.0000
10.000
TIME (SECONDS)
THU, JAN 29 2009 15:51
LINE FLOW MW

2013 WINTER PEAK STORA MIN
NS-NB=0; NB-NE=500; CBX=732; ONI=961 ONS=851
1 PHASE FAULT ON L8001 AT ONSLOW BREAKER 67N-815 FAILS;
BBU TRIPS 67N-T82 IN 15 CYCLES; NO SPS
FILE: b09-pg_8001_67n_815_bbu-2013WP-NS-0.out
CHNL# 154: [IR141-DIGBYH69.0 VOLTS]
CHNL# 153: [IR137-STATIG25.0 VOLTS]
CHNL# 152: [IR114-GLENDH138.0 VOLTS]
CHNL# 151: [IR84-DALHOHV230.0 VOLTS]
CHNL# 150: [IR82_NUTBHV69.0 VOLTS]
CHNL# 149: [IR45_AMHERTP138.0 VOLTS]
1.2000
0.70000
0.0
1.0000
2.0000
3.0000
4.0000
5.0000
6.0000
7.0000
8.0000
9.0000
10.000
TIME (SECONDS)
THU, JAN 29 2009 15:51
WIND BUS VOLTS

2013 WINTER PEAK STORA MIN
NS-NB=0; NB-NE=500; CBX=732; ONI=961 ONS=851
SLG FLT ON SEPARATE PHASES OF DOUBLE CKT TOWER
7003 AND 7004 NEAR TRENTON CLEARED IN 5 CYCLES
FILE: c01-pg_7003_7004_50n-2013WP-NS-0.out
CHNL# 20: [ANGL199169 [TUFTCV3 14.400] [3]] [ANGL156661 [DARL G1 22.000] [1
CHNL# 17: [ANGL199086 [TRENTON613.800] [6]] [ANGL156661 [DARL G1 22.000] [1
CHNL# 16: [ANGL199085 [TRENTN5 13.800] [5]] [ANGL156661 [DARL G1 22.000] [1
CHNL# 15: [ANGL199061 [TMP1 STO13.800] [1]] [ANGL156661 [DARL G1 22.000] [1
CHNL# 13: [ANGL199043 [ACONIG1 20.000] [1]] [ANGL156661 [DARL G1 22.000] [1
CHNL# 11: [ANGL199001 [LINGAN1 14.400] [1]] [ANGL156661 [DARL G1 22.000] [1
TIME (SECONDS)
THU, JAN 29 2009 15:51
NS ANGLE

2013 WINTER PEAK STORA MIN
NS-NB=0; NB-NE=500; CBX=732; ONI=961 ONS=851
SLG FLT ON SEPARATE PHASES OF DOUBLE CKT TOWER
7003 AND 7004 NEAR TRENTON CLEARED IN 5 CYCLES
FILE: c01-pg_7003_7004_50n-2013WP-NS-0.out
CHNL# 10: [ANGL190472 [BLLDNG2 19.000] [1]] [ANGL156661 [DARL G1 22.000] [1
CHNL# 6: [ANGL190456 [LEPRG1 26.000] [1]] [ANGL156661 [DARL G1 22.000] [1
CHNL# 5: [ANGL190450 [MACTG1 13.800] [1]] [ANGL156661 [DARL G1 22.000] [1
CHNL# 3: [ANGL126652 [RAV 3 22.000] [1]] [ANGL156661 [DARL G1 22.000] [1
CHNL# 2: [ANGL101063 [MYST G7 22.000] [1]] [ANGL156661 [DARL G1 22.000] [1
CHNL# 7: [ANGL190457 [C.CVG1 19.000] [1]] [ANGL156661 [DARL G1 22.000] [1
TIME (SECONDS)
THU, JAN 29 2009 15:51
"NE,NY,NB ANGLE"

2013 WINTER PEAK STORA MIN
NS-NB=0; NB-NE=500; CBX=732; ONI=961 ONS=851
SLG FLT ON SEPARATE PHASES OF DOUBLE CKT TOWER
7003 AND 7004 NEAR TRENTON CLEARED IN 5 CYCLES
FILE: c01-pg_7003_7004_50n-2013WP-NS-0.out
CHNL# 59: [POWER199169 [TUFTCV3 14.400] [3]]
CHNL# 56: [POWER199086 [TRENTON613.800] [6]]
CHNL# 55: [POWER199085 [TRENTN5 13.800] [5]]
CHNL# 54: [POWER199061 [TMP1 STO13.800] [1]]
CHNL# 52: [POWER199043 [ACONIG1 20.000] [1]]
CHNL# 50: [POWER199001 [LINGAN1 14.400] [1]]
TIME (SECONDS)
THU, JAN 29 2009 15:51
NS MW

2013 WINTER PEAK STORA MIN
NS-NB=0; NB-NE=500; CBX=732; ONI=961 ONS=851
SLG FLT ON SEPARATE PHASES OF DOUBLE CKT TOWER
7003 AND 7004 NEAR TRENTON CLEARED IN 5 CYCLES
FILE: c01-pg_7003_7004_50n-2013WP-NS-0.out
CHNL# 49: [POWER190472 [BLLDNG2 19.000] [1]]
CHNL# 45: [POWER190456 [LEPRG1 26.000] [1]]
CHNL# 44: [POWER190450 [MACTG1 13.800] [1]]
CHNL# 42: [POWER126652 [RAV 3 22.000] [1]]
CHNL# 41: [POWER101063 [MYST G7 22.000] [1]]
CHNL# 46: [POWER190457 [C.CVG1 19.000] [1]]
TIME (SECONDS)
THU, JAN 29 2009 15:51
"NE,NY,NB POWER"

2013 WINTER PEAK STORA MIN
NS-NB=0; NB-NE=500; CBX=732; ONI=961 ONS=851
SLG FLT ON SEPARATE PHASES OF DOUBLE CKT TOWER
7003 AND 7004 NEAR TRENTON CLEARED IN 5 CYCLES
FILE: c01-pg_7003_7004_50n-2013WP-NS-0.out
CHNL# 119: [VARS IR141-DIGBY]
CHNL# 118: [VARS IR137-STATIA]
CHNL# 117: [VARS IR114-GLENDHU]
CHNL# 116: [VARS IR84-DALHOUSIE]
CHNL# 115: [VARS IR82_NUTTBY]
CHNL# 114: [VARS IR45_AMHERST]
TIME (SECONDS)
THU, JAN 29 2009 15:51
NS WIND MV

2013 WINTER PEAK STORA MIN
NS-NB=0; NB-NE=500; CBX=732; ONI=961 ONS=851
SLG FLT ON SEPARATE PHASES OF DOUBLE CKT TOWER
7003 AND 7004 NEAR TRENTON CLEARED IN 5 CYCLES
FILE: c01-pg_7003_7004_50n-2013WP-NS-0.out
CHNL# 79: [POWER IR141-DIGBY]
CHNL# 78: [POWER IR137-STATIA]
CHNL# 77: [POWER IR114-GLENDHU]
CHNL# 76: [POWER IR84-DALHOUSIE]
CHNL# 75: [POWER IR82_NUTTBY]
CHNL# 74: [POWER IR45_AMHERST]
TIME (SECONDS)
THU, JAN 29 2009 15:51
NS WIND MW

2013 WINTER PEAK STORA MIN
NS-NB=0; NB-NE=500; CBX=732; ONI=961 ONS=851
SLG FLT ON SEPARATE PHASES OF DOUBLE CKT TOWER
7003 AND 7004 NEAR TRENTON CLEARED IN 5 CYCLES
FILE: c01-pg_7003_7004_50n-2013WP-NS-0.out
CHNL# 133: [VOLT199125 [ONSLOW 345.00]]
CHNL# 132: [VOLT199120 [HOPEWELL345.00]]
CHNL# 131: [VOLT199045 [WOODBINE345.00]]
CHNL# 130: [VOLT190320 [SALBRY 345.00]]
CHNL# 128: [VOLT190004 [KESWICK 345.00]]
CHNL# 127: [VOLT 70002 [ORRINGTN345.00]]
TIME (SECONDS)
THU, JAN 29 2009 15:51
"345KV VOLTAGE"

2013 WINTER PEAK STORA MIN
NS-NB=0; NB-NE=500; CBX=732; ONI=961 ONS=851
SLG FLT ON SEPARATE PHASES OF DOUBLE CKT TOWER
7003 AND 7004 NEAR TRENTON CLEARED IN 5 CYCLES
FILE: c01-pg_7003_7004_50n-2013WP-NS-0.out
CHNL# 125: 60*(1+[FREQ199125 [ONSLOW 345.00]])
CHNL# 124: 60*(1+[FREQ199120 [HOPEWELL345.00]])
CHNL# 123: 60*(1+[FREQ199045 [WOODBINE345.00]])
CHNL# 122: 60*(1+[FREQ190320 [SALBRY 345.00]])
CHNL# 121: 60*(1+[FREQ190197 [C.COVE 345.00]])
CHNL# 120: 60*(1+[FREQ 70002 [ORRINGTN345.00]])
TIME (SECONDS)
THU, JAN 29 2009 15:51
FREQUENCY HZ

2013 WINTER PEAK STORA MIN
NS-NB=0; NB-NE=500; CBX=732; ONI=961 ONS=851
SLG FLT ON SEPARATE PHASES OF DOUBLE CKT TOWER
7003 AND 7004 NEAR TRENTON CLEARED IN 5 CYCLES
FILE: c01-pg_7003_7004_50n-2013WP-NS-0.out
CHNL# 146: [VOLT199280 [TUSKET A138.00]]
CHNL# 145: [VOLT199193 [HWAS 138.00]]
CHNL# 144: [VOLT199165 [TUFTCOVE138.00]]
CHNL# 143: [VOLT199135 [SPRNGHLL138.00]]
CHNL# 142: [VOLT199090 [50N-TREN138.00]]
CHNL# 141: [VOLT199051 [HASTINGS138.00]]
1.2000
0.70000
0.0
1.0000
2.0000
3.0000
4.0000
5.0000
6.0000
7.0000
8.0000
9.0000
10.000
TIME (SECONDS)
THU, JAN 29 2009 15:51
138KV BUS VOLTS

2013 WINTER PEAK STORA MIN
NS-NB=0; NB-NE=500; CBX=732; ONI=961 ONS=851
SLG FLT ON SEPARATE PHASES OF DOUBLE CKT TOWER
7003 AND 7004 NEAR TRENTON CLEARED IN 5 CYCLES
FILE: c01-pg_7003_7004_50n-2013WP-NS-0.out
CHNL# 140: [VOLT199240 [BWATER A230.00]]
CHNL# 139: [VOLT199200 [BRUSHY 230.00]]
CHNL# 138: [VOLT199130 [ONSLOW 230.00]]
CHNL# 137: [VOLT199050 [HASTINGS230.00]]
CHNL# 136: [VOLT199044 [PT.ACONI230.00]]
CHNL# 135: [VOLT199000 [LINGAN 230.00]]
1.2000
0.70000
0.0
1.0000
2.0000
3.0000
4.0000
5.0000
6.0000
7.0000
8.0000
9.0000
10.000
TIME (SECONDS)
THU, JAN 29 2009 15:51
230KV BUS VOLTS

2013 WINTER PEAK STORA MIN
NS-NB=0; NB-NE=500; CBX=732; ONI=961 ONS=851
SLG FLT ON SEPARATE PHASES OF DOUBLE CKT TOWER
7003 AND 7004 NEAR TRENTON CLEARED IN 5 CYCLES
FILE: c01-pg_7003_7004_50n-2013WP-NS-0.out
CHNL# 217: [L6533MW]
CHNL# 215: [L6503MW]
CHNL# 197: [L8003MW]
CHNL# 195: [L8004MW]
CHNL# 193: [L8001MW]
CHNL# 221: [L3001MW]
250.00
500.00
1000.0
0.0
-250.0
-1000.
0.0
1.0000
2.0000
3.0000
4.0000
5.0000
6.0000
7.0000
8.0000
9.0000
10.000
TIME (SECONDS)
THU, JAN 29 2009 15:51
LINE FLOW MW

2013 WINTER PEAK STORA MIN
NS-NB=0; NB-NE=500; CBX=732; ONI=961 ONS=851
SLG FLT ON SEPARATE PHASES OF DOUBLE CKT TOWER
7003 AND 7004 NEAR TRENTON CLEARED IN 5 CYCLES
FILE: c01-pg_7003_7004_50n-2013WP-NS-0.out
CHNL# 154: [IR141-DIGBYH69.0 VOLTS]
CHNL# 153: [IR137-STATIG25.0 VOLTS]
CHNL# 152: [IR114-GLENDH138.0 VOLTS]
CHNL# 151: [IR84-DALHOHV230.0 VOLTS]
CHNL# 150: [IR82 NUTBHV69.0 VOLTS]
CHNL# 149: [IR45 AMHERTP138.0 VOLTS]
1.2000
0.70000
0.0
1.0000
2.0000
3.0000
4.0000
5.0000
6.0000
7.0000
8.0000
9.0000
10.000
TIME (SECONDS)
THU, JAN 29 2009 15:51
WIND BUS VOLTS

2013 WINTER PEAK STORA MIN
NS-NB=0; NB-NE=500; CBX=732; ONI=961 ONS=851
SLG FLT ON SEPARATE PHASES OF DOUBLE CKT TOWER
8004 AND 7004 CANSO CROSSING CLEARED IN 4 CYCLES
FILE: c03-pg_8004_7005_strait-2013WP-NS-0.out
CHNL# 20: [ANGL199169 [TUFTCV3 14.400] [3]] [ANGL156661 [DARL G1 22.000] [1
CHNL# 17: [ANGL199086 [TRENTON613.800] [6]] [ANGL156661 [DARL G1 22.000] [1
CHNL# 16: [ANGL199085 [TRENTN5 13.800] [5]] [ANGL156661 [DARL G1 22.000] [1
CHNL# 15: [ANGL199061 [TMP1 STO13.800] [1]] [ANGL156661 [DARL G1 22.000] [1
CHNL# 13: [ANGL199043 [ACONIG1 20.000] [1]] [ANGL156661 [DARL G1 22.000] [1
CHNL# 11: [ANGL199001 [LINGAN1 14.400] [1]] [ANGL156661 [DARL G1 22.000] [1
TIME (SECONDS)
THU, JAN 29 2009 15:51
NS ANGLE

2013 WINTER PEAK STORA MIN
NS-NB=0; NB-NE=500; CBX=732; ONI=961 ONS=851
SLG FLT ON SEPARATE PHASES OF DOUBLE CKT TOWER
8004 AND 7004 CANSO CROSSING CLEARED IN 4 CYCLES
FILE: c03-pg_8004_7005_strait-2013WP-NS-0.out
CHNL# 10: [ANGL190472 [BLLDNG2 19.000] [1]] [ANGL156661 [DARL G1 22.000] [1
CHNL# 6: [ANGL190456 [LEPRG1 26.000] [1]] [ANGL156661 [DARL G1 22.000] [1
CHNL# 5: [ANGL190450 [MACTG1 13.800] [1]] [ANGL156661 [DARL G1 22.000] [1
CHNL# 3: [ANGL126652 [RAV 3 22.000] [1]] [ANGL156661 [DARL G1 22.000] [1
CHNL# 2: [ANGL101063 [MYST G7 22.000] [1]] [ANGL156661 [DARL G1 22.000] [1
CHNL# 7: [ANGL190457 [C.CVG1 19.000] [1]] [ANGL156661 [DARL G1 22.000] [1
TIME (SECONDS)
THU, JAN 29 2009 15:51
"NE,NY,NB ANGLE"

2013 WINTER PEAK STORA MIN
NS-NB=0; NB-NE=500; CBX=732; ONI=961 ONS=851
SLG FLT ON SEPARATE PHASES OF DOUBLE CKT TOWER
8004 AND 7004 CANSO CROSSING CLEARED IN 4 CYCLES
FILE: c03-pg_8004_7005_strait-2013WP-NS-0.out
CHNL# 59: [POWER199169 [TUFTCV3 14.400] [3]]
CHNL# 56: [POWER199086 [TRENTON613.800] [6]]
CHNL# 55: [POWER199085 [TRENTN5 13.800] [5]]
CHNL# 54: [POWER199061 [TMP1 STO13.800] [1]]
CHNL# 52: [POWER199043 [ACONIG1 20.000] [1]]
CHNL# 50: [POWER199001 [LINGAN1 14.400] [1]]
TIME (SECONDS)
THU, JAN 29 2009 15:51
NS MW

2013 WINTER PEAK STORA MIN
NS-NB=0; NB-NE=500; CBX=732; ONI=961 ONS=851
SLG FLT ON SEPARATE PHASES OF DOUBLE CKT TOWER
8004 AND 7004 CANSO CROSSING CLEARED IN 4 CYCLES
FILE: c03-pg_8004_7005_strait-2013WP-NS-0.out
CHNL# 49: [POWER190472 [BLLDNG2 19.000] [1]]
CHNL# 45: [POWER190456 [LEPRG1 26.000] [1]]
CHNL# 44: [POWER190450 [MACTG1 13.800] [1]]
CHNL# 42: [POWER126652 [RAV 3 22.000] [1]]
CHNL# 41: [POWER101063 [MYST G7 22.000] [1]]
CHNL# 46: [POWER190457 [C.CVG1 19.000] [1]]
TIME (SECONDS)
THU, JAN 29 2009 15:51
"NE,NY,NB POWER"

2013 WINTER PEAK STORA MIN
NS-NB=0; NB-NE=500; CBX=732; ONI=961 ONS=851
SLG FLT ON SEPARATE PHASES OF DOUBLE CKT TOWER
8004 AND 7004 CANSO CROSSING CLEARED IN 4 CYCLES
FILE: c03-pg_8004_7005_strait-2013WP-NS-0.out
CHNL# 119: [VARS IR141-DIGBY]
CHNL# 118: [VARS IR137-STATIA]
CHNL# 117: [VARS IR114-GLENDHU]
CHNL# 116: [VARS IR84-DALHOUSIE]
CHNL# 115: [VARS IR82_NUTTBY]
CHNL# 114: [VARS IR45_AMHERST]
TIME (SECONDS)
THU, JAN 29 2009 15:51
NS WIND MV

2013 WINTER PEAK STORA MIN
NS-NB=0; NB-NE=500; CBX=732; ONI=961 ONS=851
SLG FLT ON SEPARATE PHASES OF DOUBLE CKT TOWER
8004 AND 7004 CANSO CROSSING CLEARED IN 4 CYCLES
FILE: c03-pg_8004_7005_strait-2013WP-NS-0.out
CHNL# 79: [POWER IR141-DIGBY]
CHNL# 78: [POWER IR137-STATIA]
CHNL# 77: [POWER IR114-GLENDHU]
CHNL# 76: [POWER IR84-DALHOUSIE]
CHNL# 75: [POWER IR82_NUTTBY]
CHNL# 74: [POWER IR45_AMHERST]
TIME (SECONDS)
THU, JAN 29 2009 15:51
NS WIND MW

2013 WINTER PEAK STORA MIN
NS-NB=0; NB-NE=500; CBX=732; ONI=961 ONS=851
SLG FLT ON SEPARATE PHASES OF DOUBLE CKT TOWER
8004 AND 7004 CANSO CROSSING CLEARED IN 4 CYCLES
FILE: c03-pg_8004_7005_strait-2013WP-NS-0.out
CHNL# 133: [VOLT199125 [ONSLOW 345.00]]
CHNL# 132: [VOLT199120 [HOPEWELL345.00]]
CHNL# 131: [VOLT199045 [WOODBINE345.00]]
CHNL# 130: [VOLT190320 [SALBRY 345.00]]
CHNL# 128: [VOLT190004 [KESWICK 345.00]]
CHNL# 127: [VOLT 70002 [ORRINGTN345.00]]
TIME (SECONDS)
THU, JAN 29 2009 15:51
"345KV VOLTAGE"

2013 WINTER PEAK STORA MIN
NS-NB=0; NB-NE=500; CBX=732; ONI=961 ONS=851
SLG FLT ON SEPARATE PHASES OF DOUBLE CKT TOWER
8004 AND 7004 CANSO CROSSING CLEARED IN 4 CYCLES
FILE: c03-pg_8004_7005_strait-2013WP-NS-0.out
CHNL# 125: 60*(1+[FREQ199125 [ONSLOW 345.00]])
CHNL# 124: 60*(1+[FREQ199120 [HOPEWELL345.00]])
CHNL# 123: 60*(1+[FREQ199045 [WOODBINE345.00]])
CHNL# 122: 60*(1+[FREQ190320 [SALBRY 345.00]])
CHNL# 121: 60*(1+[FREQ190197 [C.COVE 345.00]])
CHNL# 120: 60*(1+[FREQ 70002 [ORRINGTN345.00]])
TIME (SECONDS)
THU, JAN 29 2009 15:51
FREQUENCY HZ

2013 WINTER PEAK STORA MIN
NS-NB=0; NB-NE=500; CBX=732; ONI=961 ONS=851
SLG FLT ON SEPARATE PHASES OF DOUBLE CKT TOWER
8004 AND 7004 CANSO CROSSING CLEARED IN 4 CYCLES
FILE: c03-pg_8004_7005_strait-2013WP-NS-0.out
CHNL# 146: [VOLT199280 [TUSKET A138.00]]
CHNL# 145: [VOLT199193 [HHWAS 138.00]]
CHNL# 144: [VOLT199165 [TUFTCOVE138.00]]
CHNL# 143: [VOLT199138 [SPRNGHILL138.00]]
CHNL# 142: [VOLT199090 [SOVTREN138.00]]
CHNL# 141: [VOLT199051 [HASTINGS138.00]]
1.2000
0.70000
0.0
1.0000
2.0000
3.0000
4.0000
5.0000
6.0000
7.0000
8.0000
9.0000
10.000
TIME (SECONDS)
THU, JAN 29 2009 15:51
138KV BUS VOLTS

2013 WINTER PEAK STORA MIN
NS-NB=0; NB-NE=500; CBX=732; ONI=961 ONS=851
SLG FLT ON SEPARATE PHASES OF DOUBLE CKT TOWER
8004 AND 7004 CANSO CROSSING CLEARED IN 4 CYCLES
FILE: c03-pg_8004_7005_strait-2013WP-NS-0.out
CHNL# 140: [VOLT199240 [BWATER A230.00]]
CHNL# 139: [VOLT199200 [BRUSHY 230.00]]
CHNL# 138: [VOLT199130 [ONSLOW 230.00]]
CHNL# 137: [VOLT199050 [HASTINGS230.00]]
CHNL# 136: [VOLT199044 [PT.ACONI230.00]]
CHNL# 135: [VOLT199000 [LINGAN 230.00]]
1.2000
0.70000
0.0
1.0000
2.0000
3.0000
4.0000
5.0000
6.0000
7.0000
8.0000
9.0000
10.000
TIME (SECONDS)
THU, JAN 29 2009 15:51
230KV BUS VOLTS

2013 WINTER PEAK STORA MIN
NS-NB=0; NB-NE=500; CBX=732; ONI=961 ONS=851
SLG FLT ON SEPARATE PHASES OF DOUBLE CKT TOWER
8004 AND 7004 CANSO CROSSING CLEARED IN 4 CYCLES
FILE: c03-pg_8004_7005_strait-2013WP-NS-0.out
CHNL# 217: [L6533NMW]
CHNL# 215: [L6503MW]
CHNL# 197: [L8003MW]
CHNL# 195: [L8004MW]
CHNL# 193: [L8001MW]
CHNL# 221: [L3001MW]
250.00
-250.0
500.00
0.0
1000.0
-1000.
0.0
1.0000
2.0000
3.0000
4.0000
5.0000
6.0000
7.0000
8.0000
9.0000
10.000
TIME (SECONDS)
THU, JAN 29 2009 15:51
LINE FLOW MW

2013 WINTER PEAK STORA MIN
NS-NB=0; NB-NE=500; CBX=732; ONI=961 ONS=851
SLG FLT ON SEPARATE PHASES OF DOUBLE CKT TOWER
8004 AND 7004 CANSO CROSSING CLEARED IN 4 CYCLES
FILE: c03-pg_8004_7005_strait-2013WP-NS-0.out
CHNL# 154: [IR141-DIGBYH69.0 VOLTS]
CHNL# 153: [IR137-STATIG25.0 VOLTS]
CHNL# 152: [IR114-GLENDH138.0 VOLTS]
CHNL# 151: [IR84-DALHOHV230.0 VOLTS]
CHNL# 150: [IR82_NUTBHV69.0 VOLTS]
CHNL# 149: [IR45_AMHERTP138.0 VOLTS]
1.2000
0.70000
0.0
1.0000
2.0000
3.0000
4.0000
5.0000
6.0000
7.0000
8.0000
9.0000
10.000
TIME (SECONDS)
THU, JAN 29 2009 15:51
WIND BUS VOLTS

2013 WINTER PEAK STORA MIN
NS-NB=0; NB-NE=500; CBX=732; ONI=961 ONS=851
SLG FLT ON SEPARATE PHASES OF DOUBLE CKT TOWER
8004 AND 7004 CANSO CROSSING SPS TRIPS 1 LINGAN
FILE: c03s-pg_8004_7005_strait-2013WP-NS-0.out
CHNL# 20: [ANGL199169 [TUFTCV3 14.400] [3]] [ANGL156661 [DARL G1 22.000] [1
CHNL# 17: [ANGL199086 [TRENTON613.800] [6]] [ANGL156661 [DARL G1 22.000] [1
CHNL# 16: [ANGL199085 [TRENTN5 13.800] [5]] [ANGL156661 [DARL G1 22.000] [1
CHNL# 15: [ANGL199061 [TMP1 STO13.800] [1]] [ANGL156661 [DARL G1 22.000] [1
CHNL# 13: [ANGL199043 [ACONIG1 20.000] [1]] [ANGL156661 [DARL G1 22.000] [1
CHNL# 11: [ANGL199001 [LINGAN1 14.400] [1]] [ANGL156661 [DARL G1 22.000] [1
100.00
-100.0
50.000
-150.0
0.0
1.0000
2.0000
3.0000
4.0000
5.0000
6.0000
7.0000
8.0000
9.0000
10.000
TIME (SECONDS)
THU, JAN 29 2009 15:51
NS ANGLE

2013 WINTER PEAK STORA MIN
NS-NB=0; NB-NE=500; CBX=732; ONI=961 ONS=851
SLG FLT ON SEPARATE PHASES OF DOUBLE CKT TOWER
8004 AND 7004 CANSO CROSSING SPS TRIPS 1 LINGAN
FILE: c03s-pg_8004_7005_strait-2013WP-NS-0.out
CHNL# 10: [ANGL190472 [BLLDNG2 19.000] [1]] [ANGL156661 [DARL G1 22.000] [1
CHNL# 6: [ANGL190456 [LEPRG1 26.000] [1]] [ANGL156661 [DARL G1 22.000] [1
CHNL# 5: [ANGL190450 [MACTG1 13.800] [1]] [ANGL156661 [DARL G1 22.000] [1
CHNL# 3: [ANGL126652 [RAV 3 22.000] [1]] [ANGL156661 [DARL G1 22.000] [1
CHNL# 2: [ANGL101063 [MYST G7 22.000] [1]] [ANGL156661 [DARL G1 22.000] [1
CHNL# 7: [ANGL190457 [C.CVG1 19.000] [1]] [ANGL156661 [DARL G1 22.000] [1
100.00
-100.0
0.0
1.0000
2.0000
3.0000
4.0000
5.0000
6.0000
7.0000
8.0000
9.0000
10.000
TIME (SECONDS)
THU, JAN 29 2009 15:51
"NE,NY,NB ANGLE"

2013 WINTER PEAK STORA MIN
NS-NB=0; NB-NE=500; CBX=732; ONI=961 ONS=851
SLG FLT ON SEPARATE PHASES OF DOUBLE CKT TOWER
8004 AND 7004 CANSO CROSSING SPS TRIPS 1 LINGAN
FILE: c03s-pg_8004_7005_strait-2013WP-NS-0.out
CHNL# 59: [POWER199169 [TUFTCV3 14.400] [3]]
CHNL# 56: [POWER199086 [TRENTON613.800] [6]]
CHNL# 55: [POWER199085 [TRENTN5 13.800] [5]]
CHNL# 54: [POWER199061 [TMP1 STO13.800] [1]]
CHNL# 52: [POWER199043 [ACONIG1 20.000] [1]]
CHNL# 50: [POWER199001 [LINGAN1 14.400] [1]]
2.5000
0.0
1.0000
-1.500
0.0
1.0000
2.0000
3.0000
4.0000
5.0000
6.0000
7.0000
8.0000
9.0000
10.000
TIME (SECONDS)
THU, JAN 29 2009 15:51
NS MW

2013 WINTER PEAK STORA MIN
NS-NB=0; NB-NE=500; CBX=732; ONI=961 ONS=851
SLG FLT ON SEPARATE PHASES OF DOUBLE CKT TOWER
8004 AND 7004 CANSO CROSSING SPS TRIPS 1 LINGAN
FILE: c03s-pg_8004_7005_strait-2013WP-NS-0.out
CHNL# 49: [POWER190472 [BLLDNG2 19.000] [1]]
CHNL# 45: [POWER190456 [LEPRG1 26.000] [1]]
CHNL# 44: [POWER190450 [MACTG1 13.800] [1]]
CHNL# 42: [POWER126652 [RAV 3 22.000] [1]]
CHNL# 41: [POWER101063 [MYST G7 22.000] [1]]
CHNL# 46: [POWER190457 [C.CVG1 19.000] [1]]
7.0000
2.0000
9.0000
4.0000
5.0000
0.0
5.0000
0.0
6.5000
1.0000
5.0000
0.0
1.0000
2.0000
3.0000
4.0000
5.0000
6.0000
7.0000
8.0000
9.0000
10.000
TIME (SECONDS)
THU, JAN 29 2009 15:51
"NE,NY,NB POWER"

2013 WINTER PEAK STORA MIN
NS-NB=0; NB-NE=500; CBX=732; ONI=961 ONS=851
SLG FLT ON SEPARATE PHASES OF DOUBLE CKT TOWER
8004 AND 7004 CANSO CROSSING SPS TRIPS 1 LINGAN
FILE: c03s-pg_8004_7005_strait-2013WP-NS-0.out
CHNL# 119: [VARS IR141-DIGBY]
CHNL# 118: [VARS IR137-STATIA]
CHNL# 117: [VARS IR114-GLENDHU]
CHNL# 116: [VARS IR84-DALHOUSIE]
CHNL# 115: [VARS IR82_NUTTBY]
CHNL# 114: [VARS IR45_AMHERST]
0.50000
-0.5000
TIME (SECONDS)
THU, JAN 29 2009 15:51
NS WIND MV

2013 WINTER PEAK STORA MIN
NS-NB=0; NB-NE=500; CBX=732; ONI=961 ONS=851
SLG FLT ON SEPARATE PHASES OF DOUBLE CKT TOWER
8004 AND 7004 CANSO CROSSING SPS TRIPS 1 LINGAN
FILE: c03s-pg_8004_7005_strait-2013WP-NS-0.out
CHNL# 79: [POWER IR141-DIGBY]
CHNL# 78: [POWER IR137-STATIA]
CHNL# 77: [POWER IR114-GLENDHU]
CHNL# 76: [POWER IR84-DALHOUSIE]
CHNL# 75: [POWER IR82_NUTTBY]
CHNL# 74: [POWER IR45_AMHERST]
1.0000
0.0
TIME (SECONDS)
THU, JAN 29 2009 15:51
NS WIND MW

2013 WINTER PEAK STORA MIN
NS-NB=0; NB-NE=500; CBX=732; ONI=961 ONS=851
SLG FLT ON SEPARATE PHASES OF DOUBLE CKT TOWER
8004 AND 7004 CANSO CROSSING SPS TRIPS 1 LINGAN
FILE: c03s-pg_8004_7005_strait-2013WP-NS-0.out
CHNL# 133: [VOLT199125 [ONSLOW 345.00]]
CHNL# 132: [VOLT199120 [HOPEWELL 345.00]]
CHNL# 131: [VOLT199045 [WOODBINE345.00]]
CHNL# 130: [VOLT190320 [SALBRY 345.00]]
CHNL# 128: [VOLT190004 [KESWICK 345.00]]
CHNL# 127: [VOLT 70002 [ORRINGTN345.00]]
1.1000
0.90000
TIME (SECONDS)
THU, JAN 29 2009 15:51
"345KV VOLTAGE"

2013 WINTER PEAK STORA MIN
NS-NB=0; NB-NE=500; CBX=732; ONI=961 ONS=851
SLG FLT ON SEPARATE PHASES OF DOUBLE CKT TOWER
8004 AND 7004 CANSO CROSSING SPS TRIPS 1 LINGAN
FILE: c03s-pg_8004_7005_strait-2013WP-NS-0.out
CHNL# 125: 60*(1+[FREQ199125 [ONSLOW 345.00]])
CHNL# 124: 60*(1+[FREQ199120 [HOPEWELL 345.00]])
CHNL# 123: 60*(1+[FREQ199045 [WOODBINE345.00]])
CHNL# 122: 60*(1+[FREQ190320 [SALBRY 345.00]])
CHNL# 121: 60*(1+[FREQ190197 [C.COVE 345.00]])
CHNL# 120: 60*(1+[FREQ 70002 [ORRINGTN345.00]])
60.500
59.500
TIME (SECONDS)
THU, JAN 29 2009 15:51
FREQUENCY HZ

2013 WINTER PEAK STORA MIN
NS-NB=0; NB-NE=500; CBX=732; ONI=961 ONS=851
SLG FLT ON SEPARATE PHASES OF DOUBLE CKT TOWER
8004 AND 7004 CANSO CROSSING SPS TRIPS 1 LINGAN
FILE: c03s-pg_8004_7005_strait-2013WP-NS-0.out
CHNL# 146: [VOLT199280 [TUSKET A138.00]]
CHNL# 145: [VOLT199193 [LH-WAS 138.00]]
CHNL# 144: [VOLT199165 [TUFTCOVE138.00]]
CHNL# 143: [VOLT199135 [SPRNGHLL138.00]]
CHNL# 142: [VOLT199090 [SON-TREN138.00]]
CHNL# 141: [VOLT199051 [HASTINGS138.00]]
1.2000
0.70000
0.0
1.0000
2.0000
3.0000
4.0000
5.0000
6.0000
7.0000
8.0000
9.0000
10.000
TIME (SECONDS)
THU, JAN 29 2009 15:51
138KV BUS VOLTS

2013 WINTER PEAK STORA MIN
NS-NB=0; NB-NE=500; CBX=732; ONI=961 ONS=851
SLG FLT ON SEPARATE PHASES OF DOUBLE CKT TOWER
8004 AND 7004 CANSO CROSSING SPS TRIPS 1 LINGAN
FILE: c03s-pg_8004_7005_strait-2013WP-NS-0.out
CHNL# 140: [VOLT199240 [BWATER A230.00]]
CHNL# 139: [VOLT199200 [BRUSHY 230.00]]
CHNL# 138: [VOLT199130 [ONSLOW 230.00]]
CHNL# 137: [VOLT199050 [HASTINGS230.00]]
CHNL# 136: [VOLT199044 [PT.ACONI230.00]]
CHNL# 135: [VOLT199000 [LINGAN 230.00]]
1.2000
0.70000
0.0
1.0000
2.0000
3.0000
4.0000
5.0000
6.0000
7.0000
8.0000
9.0000
10.000
TIME (SECONDS)
THU, JAN 29 2009 15:51
230KV BUS VOLTS

2013 WINTER PEAK STORA MIN
NS-NB=0; NB-NE=500; CBX=732; ONI=961 ONS=851
SLG FLT ON SEPARATE PHASES OF DOUBLE CKT TOWER
8004 AND 7004 CANSO CROSSING SPS TRIPS 1 LINGAN
FILE: c03s-pg_8004_7005_strait-2013WP-NS-0.out
CHNL# 217: [L6533MW]
CHNL# 215: [L6503MW]
CHNL# 197: [L8003MW]
CHNL# 195: [L8004MW]
CHNL# 193: [L8001MW]
CHNL# 221: [L3001MW]
250.00
500.00
1000.0
0.0
-250.0
-1000.
-1000.
TIME (SECONDS)
THU, JAN 29 2009 15:51
LINE FLOW MW

2013 WINTER PEAK STORA MIN
NS-NB=0; NB-NE=500; CBX=732; ONI=961 ONS=851
SLG FLT ON SEPARATE PHASES OF DOUBLE CKT TOWER
8004 AND 7004 CANSO CROSSING SPS TRIPS 1 LINGAN
FILE: c03s-pg_8004_7005_strait-2013WP-NS-0.out
CHNL# 154: [IR141-DIGBYH69.0 VOLTS]
CHNL# 153: [IR137-STATIG25.0 VOLTS]
CHNL# 152: [IR114-GLENDH138.0 VOLTS]
CHNL# 151: [IR84-DALHOHV230.0 VOLTS]
CHNL# 150: [IR82 NUTBHV69.0 VOLTS]
CHNL# 149: [IR45 AMHERTP138.0 VOLTS]
1.2000
0.70000
0.0
1.0000
2.0000
3.0000
4.0000
5.0000
6.0000
7.0000
8.0000
9.0000
10.000
TIME (SECONDS)
THU, JAN 29 2009 15:51
WIND BUS VOLTS

2013 WINTER PEAK STORA MIN
NS-NB=0; NB-NE=500; CBX=732; ONI=961 ONS=851
SLG FLT ON SEPARATE PHASES OF DOUBLE CKT TOWER
8004 AND 7004 CANSO CROSSING SPS TRIPS 2 LINGANS
FILE: c03ss-pg_8004_7005_strait-2013WP-NS-0.out
CHNL# 20: [ANGL199169 [TUFTCV3 14.400] [3]] [ANGL156661 [DARL G1 22.000] [1
CHNL# 17: [ANGL199086 [TRENTON613.800] [6]] [ANGL156661 [DARL G1 22.000] [1
CHNL# 16: [ANGL199085 [TRENTN5 13.800] [5]] [ANGL156661 [DARL G1 22.000] [1
CHNL# 15: [ANGL199061 [TMP1 STO13.800] [1]] [ANGL156661 [DARL G1 22.000] [1
CHNL# 13: [ANGL199043 [ACONIG1 20.000] [1]] [ANGL156661 [DARL G1 22.000] [1
CHNL# 11: [ANGL199001 [LINGAN1 14.400] [1]] [ANGL156661 [DARL G1 22.000] [1
100.00
-100.0
50.000
-150.0
0.0
1.0000
2.0000
3.0000
4.0000
5.0000
6.0000
7.0000
8.0000
9.0000
10.000
TIME (SECONDS)
THU, JAN 29 2009 15:51
NS ANGLE

2013 WINTER PEAK STORA MIN
NS-NB=0; NB-NE=500; CBX=732; ONI=961 ONS=851
SLG FLT ON SEPARATE PHASES OF DOUBLE CKT TOWER
8004 AND 7004 CANSO CROSSING SPS TRIPS 2 LINGANS
FILE: c03ss-pg_8004_7005_strait-2013WP-NS-0.out
CHNL# 10: [ANGL190472 [BLLDNG2 19.000] [1]] [ANGL156661 [DARL G1 22.000] [1
CHNL# 6: [ANGL190456 [LEPRG1 26.000] [1]] [ANGL156661 [DARL G1 22.000] [1
CHNL# 5: [ANGL190450 [MACTG1 13.800] [1]] [ANGL156661 [DARL G1 22.000] [1
CHNL# 3: [ANGL126652 [RAV 3 22.000] [1]] [ANGL156661 [DARL G1 22.000] [1
CHNL# 2: [ANGL101063 [MYST G7 22.000] [1]] [ANGL156661 [DARL G1 22.000] [1
CHNL# 7: [ANGL190457 [C.CVG1 19.000] [1]] [ANGL156661 [DARL G1 22.000] [1
100.00
-100.0
0.0
1.0000
2.0000
3.0000
4.0000
5.0000
6.0000
7.0000
8.0000
9.0000
10.000
TIME (SECONDS)
THU, JAN 29 2009 15:51
"NE,NY,NB ANGLE"

2013 WINTER PEAK STORA MIN
NS-NB=0; NB-NE=500; CBX=732; ONI=961 ONS=851
SLG FLT ON SEPARATE PHASES OF DOUBLE CKT TOWER
8004 AND 7004 CANSO CROSSING SPS TRIPS 2 LINGANS
FILE: c03ss-pg_8004_7005_strait-2013WP-NS-0.out
CHNL# 59: [POWR199169 [TUFTCV3 14.400] [3]]
CHNL# 56: [POWR199086 [TRENTON613.800] [6]]
CHNL# 55: [POWR199085 [TRENTN5 13.800] [5]]
CHNL# 54: [POWR199061 [TMP1 STO13.800] [1]]
CHNL# 52: [POWR199043 [ACONIG1 20.000] [1]]
CHNL# 50: [POWR199001 [LINGAN1 14.400] [1]]
2.5000
0.0
1.0000
-1.500
0.0
1.0000
2.0000
3.0000
4.0000
5.0000
6.0000
7.0000
8.0000
9.0000
10.000
TIME (SECONDS)
THU, JAN 29 2009 15:51
NS MW

2013 WINTER PEAK STORA MIN
NS-NB=0; NB-NE=500; CBX=732; ONI=961 ONS=851
SLG FLT ON SEPARATE PHASES OF DOUBLE CKT TOWER
8004 AND 7004 CANSO CROSSING SPS TRIPS 2 LINGANS
FILE: c03ss-pg_8004_7005_strait-2013WP-NS-0.out
CHNL# 49: [POWER190472 [BLLDNG2 19.000] [1]]
CHNL# 45: [POWER190456 [LEPRG1 26.000] [1]]
CHNL# 44: [POWER190450 [MACTG1 13.800] [1]]
CHNL# 42: [POWER126652 [RAV 3 22.000] [1]]
CHNL# 41: [POWER101063 [MYST G7 22.000] [1]]
CHNL# 46: [POWER190457 [C.CVG1 19.000] [1]]
7.0000
2.0000
9.0000
4.0000
5.0000
0.0
5.0000
0.0
6.5000
1.0000
5.0000
0.0
1.0000
2.0000
3.0000
4.0000
5.0000
6.0000
7.0000
8.0000
9.0000
10.000
TIME (SECONDS)
THU, JAN 29 2009 15:51
"NE,NY,NB POWER"

2013 WINTER PEAK STORA MIN
NS-NB=0; NB-NE=500; CBX=732; ONI=961 ONS=851
SLG FLT ON SEPARATE PHASES OF DOUBLE CKT TOWER
8004 AND 7004 CANSO CROSSING SPS TRIPS 2 LINGANS
FILE: c03ss-pg_8004_7005_strait-2013WP-NS-0.out
CHNL# 119: [VARS IR141-DIGBY]
CHNL# 118: [VARS IR137-STATIA]
CHNL# 117: [VARS IR114-GLENDHU]
CHNL# 116: [VARS IR84-DALHOUSIE]
CHNL# 115: [VARS IR82_NUTTBY]
CHNL# 114: [VARS IR45_AMHERST]
TIME (SECONDS)
THU, JAN 29 2009 15:51
NS WIND MV

2013 WINTER PEAK STORA MIN
NS-NB=0; NB-NE=500; CBX=732; ONI=961 ONS=851
SLG FLT ON SEPARATE PHASES OF DOUBLE CKT TOWER
8004 AND 7004 CANSO CROSSING SPS TRIPS 2 LINGANS
FILE: c03ss-pg_8004_7005_strait-2013WP-NS-0.out
CHNL# 79: [POWER IR141-DIGBY]
CHNL# 78: [POWER IR137-STATIA]
CHNL# 77: [POWER IR114-GLENDHU]
CHNL# 76: [POWER IR84-DALHOUSIE]
CHNL# 75: [POWER IR82_NUTTBY]
CHNL# 74: [POWER IR45_AMHERST]
TIME (SECONDS)
THU, JAN 29 2009 15:51
NS WIND MW

2013 WINTER PEAK STORA MIN
NS-NB=0; NB-NE=500; CBX=732; ONI=961 ONS=851
SLG FLT ON SEPARATE PHASES OF DOUBLE CKT TOWER
8004 AND 7004 CANSO CROSSING SPS TRIPS 2 LINGANS
FILE: c03ss-pg_8004_7005_strait-2013WP-NS-0.out
CHNL# 133: [VOLT199125 [ONSLOW 345.00]]
CHNL# 132: [VOLT199120 [HOPEWELL345.00]]
CHNL# 131: [VOLT199045 [WOODBINE345.00]]
CHNL# 130: [VOLT190320 [SALBRY 345.00]]
CHNL# 128: [VOLT190004 [KESWICK 345.00]]
CHNL# 127: [VOLT 70002 [ORRINGTN345.00]]
TIME (SECONDS)
THU, JAN 29 2009 15:51
"345KV VOLTAGE"

2013 WINTER PEAK STORA MIN
NS-NB=0; NB-NE=500; CBX=732; ONI=961 ONS=851
SLG FLT ON SEPARATE PHASES OF DOUBLE CKT TOWER
8004 AND 7004 CANSO CROSSING SPS TRIPS 2 LINGANS
FILE: c03ss-pg_8004_7005_strait-2013WP-NS-0.out
CHNL# 125: [60*(1+[FREQ199125 [ONSLOW 345.00]])]
CHNL# 124: [60*(1+[FREQ199120 [HOPEWELL345.00]])]
CHNL# 123: [60*(1+[FREQ199045 [WOODBINE345.00]])]
CHNL# 122: [60*(1+[FREQ190320 [SALBRY 345.00]])]
CHNL# 121: [60*(1+[FREQ190197 [C.COVE 345.00]])]
CHNL# 120: [60*(1+[FREQ 70002 [ORRINGTN345.00]])]
TIME (SECONDS)
THU, JAN 29 2009 15:51
FREQUENCY HZ

2013 WINTER PEAK STORA MIN
NS-NB=0; NB-NE=500; CBX=732; ONI=961 ONS=851
SLG FLT ON SEPARATE PHASES OF DOUBLE CKT TOWER
8004 AND 7004 CANSO CROSSING SPS TRIPS 2 LINGANS
FILE: c03ss-pg_8004_7005_strait-2013WP-NS-0.out
CHNL# 146: [VOLT199280 [TUSKET A138.00]]
CHNL# 145: [VOLT199193 [HHWAS 138.00]]
CHNL# 144: [VOLT199165 [TUFTCOVE138.00]]
CHNL# 143: [VOLT199138 [SPRNGHLL138.00]]
CHNL# 142: [VOLT199090 [SON-TREN138.00]]
CHNL# 141: [VOLT199051 [HASTINGS138.00]]
1.2000
0.70000
0.0
1.0000
2.0000
3.0000
4.0000
5.0000
6.0000
7.0000
8.0000
9.0000
10.000
TIME (SECONDS)
THU, JAN 29 2009 15:51
138KV BUS VOLTS

2013 WINTER PEAK STORA MIN
NS-NB=0; NB-NE=500; CBX=732; ONI=961 ONS=851
SLG FLT ON SEPARATE PHASES OF DOUBLE CKT TOWER
8004 AND 7004 CANSO CROSSING SPS TRIPS 2 LINGANS
FILE: c03ss-pg_8004_7005_strait-2013WP-NS-0.out
CHNL# 140: [VOLT199240 [BWATER A230.00]]
CHNL# 139: [VOLT199200 [BRUSHY 230.00]]
CHNL# 138: [VOLT199130 [ONSLOW 230.00]]
CHNL# 137: [VOLT199050 [HASTINGS230.00]]
CHNL# 136: [VOLT199044 [PT.ACONI230.00]]
CHNL# 135: [VOLT199000 [LINGAN 230.00]]
1.2000
0.70000
0.0
1.0000
2.0000
3.0000
4.0000
5.0000
6.0000
7.0000
8.0000
9.0000
10.000
TIME (SECONDS)
THU, JAN 29 2009 15:51
230KV BUS VOLTS

2013 WINTER PEAK STORA MIN
NS-NB=0; NB-NE=500; CBX=732; ONI=961 ONS=851
SLG FLT ON SEPARATE PHASES OF DOUBLE CKT TOWER
8004 AND 7004 CANSO CROSSING SPS TRIPS 2 LINGANS
FILE: c03ss-pg_8004_7005_strait-2013WP-NS-0.out
CHNL# 217: [L6533MW]
CHNL# 215: [L6503MW]
CHNL# 197: [L8003MW]
CHNL# 195: [L8004MW]
CHNL# 193: [L8001MW]
CHNL# 221: [L3001MW]
250.00
500.00
1000.0
0.0
-250.0
-1000.
0.0
1.0000
2.0000
3.0000
4.0000
5.0000
6.0000
7.0000
8.0000
9.0000
10.000
TIME (SECONDS)
THU, JAN 29 2009 15:51
LINE FLOW MW

2013 WINTER PEAK STORA MIN
NS-NB=0; NB-NE=500; CBX=732; ONI=961 ONS=851
SLG FLT ON SEPARATE PHASES OF DOUBLE CKT TOWER
8004 AND 7004 CANSO CROSSING SPS TRIPS 2 LINGANS
FILE: c03ss-pg_8004_7005_strait-2013WP-NS-0.out
CHNL# 154: [IR141-DIGBYH69.0 VOLTS]
CHNL# 153: [IR137-STATIG25.0 VOLTS]
CHNL# 152: [IR114-GLENDH138.0 VOLTS]
CHNL# 151: [IR84-DALHOHV230.0 VOLTS]
CHNL# 150: [IR82_NUTBHV69.0 VOLTS]
CHNL# 149: [IR45_AMHERTP138.0 VOLTS]
1.2000
0.70000
0.0
1.0000
2.0000
3.0000
4.0000
5.0000
6.0000
7.0000
8.0000
9.0000
10.000
TIME (SECONDS)
THU, JAN 29 2009 15:51
WIND BUS VOLTS

2013 WINTER PEAK STORA MIN
NS-NB=0; NB-NE=500; CBX=732; ONI=961 ONS=851
1 PHASE FAULT ON TRENTON BUS-TIE BREAKER 50N604
5 CYCLES, NO RECLOSING, CLEARS WHOLE 138 KV STATION
FILE: d03-1ph_50n604-2013WP-NS-0.out
CHNL# 20: [ANGL199169 [TUFTCV3 14.400] [3]] [ANGL156661 [DARL G1 22.000] [1]
CHNL# 17: [ANGL199086 [TRENTON6 13.800] [6]] [ANGL156661 [DARL G1 22.000] [1]
CHNL# 16: [ANGL199085 [TRENTN5 13.800] [5]] [ANGL156661 [DARL G1 22.000] [1]
CHNL# 15: [ANGL199061 [TMP1 STO13.800] [1]] [ANGL156661 [DARL G1 22.000] [1]
CHNL# 13: [ANGL199043 [ACONIG1 20.000] [1]] [ANGL156661 [DARL G1 22.000] [1]
CHNL# 11: [ANGL199001 [LINGAN1 14.400] [1]] [ANGL156661 [DARL G1 22.000] [1]
100.00
-100.0
50.000
-150.0
0.0
1.0000
2.0000
3.0000
4.0000
5.0000
6.0000
7.0000
8.0000
9.0000
10.000
TIME (SECONDS)
THU, JAN 29 2009 15:51
NS ANGLE

2013 WINTER PEAK STORA MIN
NS-NB=0; NB-NE=500; CBX=732; ONI=961 ONS=851
1 PHASE FAULT ON TRENTON BUS-TIE BREAKER 50N604
5 CYCLES, NO RECLOSING, CLEARS WHOLE 138 KV STATION
FILE: d03-1ph_50n604-2013WP-NS-0.out
CHNL# 10: [ANGL190472 [BLLDNG2 19.000] [1]] [ANGL156661 [DARL G1 22.000] [1]
CHNL# 6: [ANGL190456 [LEPRG1 26.000] [1]] [ANGL156661 [DARL G1 22.000] [1]
CHNL# 5: [ANGL190450 [MACTG1 13.800] [1]] [ANGL156661 [DARL G1 22.000] [1]
CHNL# 3: [ANGL126652 [RAV 3 22.000] [1]] [ANGL156661 [DARL G1 22.000] [1]
CHNL# 2: [ANGL101063 [MYST G7 22.000] [1]] [ANGL156661 [DARL G1 22.000] [1]
CHNL# 7: [ANGL190457 [C.CVG1 19.000] [1]] [ANGL156661 [DARL G1 22.000] [1]
100.00
-100.0
0.0
1.0000
2.0000
3.0000
4.0000
5.0000
6.0000
7.0000
8.0000
9.0000
10.000
TIME (SECONDS)
THU, JAN 29 2009 15:51
"NE,NY,NB ANGLE"

2013 WINTER PEAK STORA MIN
NS-NB=0; NB-NE=500; CBX=732; ONI=961 ONS=851
1 PHASE FAULT ON TRENTON BUS-TIE BREAKER 50N604
5 CYCLES, NO RECLOSING, CLEARS WHOLE 138 KV STATION
FILE: d03-1ph_50n604-2013WP-NS-0.out
CHNL# 59: [POWER199169 [TUFTCV3 14.400] [3]]
CHNL# 56: [POWER199086 [TRENTON6 13.800] [6]]
CHNL# 55: [POWER199085 [TRENTN5 13.800] [5]]
CHNL# 54: [POWER199061 [TMP1 STO13.800] [1]]
CHNL# 52: [POWER199043 [ACONIG1 20.000] [1]]
CHNL# 50: [POWER199001 [LINGAN1 14.400] [1]]
2.5000
0.0
1.0000
-1.500
0.0
1.0000
2.0000
3.0000
4.0000
5.0000
6.0000
7.0000
8.0000
9.0000
10.000
TIME (SECONDS)
THU, JAN 29 2009 15:51
NS MW

2013 WINTER PEAK STORA MIN
NS-NB=0; NB-NE=500; CBX=732; ONI=961 ONS=851
1 PHASE FAULT ON TRENTON BUS-TIE BREAKER 50N604
5 CYCLES, NO RECLOSING, CLEARS WHOLE 138 KV STATION
FILE: d03-1ph_50n604-2013WP-NS-0.out
CHNL# 49: [POWER190472 [BLLDNG2 19.000] [1]]
CHNL# 45: [POWER190456 [LEPRG1 26.000] [1]]
CHNL# 44: [POWER190450 [MACTG1 13.800] [1]]
CHNL# 42: [POWER126652 [RAV 3 22.000] [1]]
CHNL# 41: [POWER101063 [MYST G7 22.000] [1]]
CHNL# 46: [POWER190457 [C.CVG1 19.000] [1]]
7.0000
2.0000
9.0000
4.0000
5.0000
0.0
5.0000
0.0
6.5000
1.0000
5.0000
0.0
1.0000
2.0000
3.0000
4.0000
5.0000
6.0000
7.0000
8.0000
9.0000
10.000
TIME (SECONDS)
THU, JAN 29 2009 15:51
"NE,NY,NB POWER"

2013 WINTER PEAK STORA MIN
NS-NB=0; NB-NE=500; CBX=732; ONI=961 ONS=851
1 PHASE FAULT ON TRENTON BUS-TIE BREAKER 50N604
5 CYCLES, NO RECLOSING, CLEARS WHOLE 138 KV STATION
FILE: d03-1ph_50n604-2013WP-NS-0.out
CHNL# 119: [VARS IR141-DIGBY]
CHNL# 118: [VARS IR137-STATIA]
CHNL# 117: [VARS IR114-GLENDHU]
CHNL# 116: [VARS IR84-DALHOUSIE]
CHNL# 115: [VARS IR82_NUTTBY]
CHNL# 114: [VARS IR45_AMHERST]
0.50000
-0.5000
0.0
1.0000
2.0000
3.0000
4.0000
5.0000
6.0000
7.0000
8.0000
9.0000
10.000
TIME (SECONDS)
THU, JAN 29 2009 15:51
NS WIND MV

2013 WINTER PEAK STORA MIN
NS-NB=0; NB-NE=500; CBX=732; ONI=961 ONS=851
1 PHASE FAULT ON TRENTON BUS-TIE BREAKER 50N604
5 CYCLES, NO RECLOSING, CLEARS WHOLE 138 KV STATION
FILE: d03-1ph_50n604-2013WP-NS-0.out
CHNL# 79: [POWER IR141-DIGBY]
CHNL# 78: [POWER IR137-STATIA]
CHNL# 77: [POWER IR114-GLENDHU]
CHNL# 76: [POWER IR84-DALHOUSIE]
CHNL# 75: [POWER IR82_NUTTBY]
CHNL# 74: [POWER IR45_AMHERST]
1.0000
0.0
0.0
1.0000
2.0000
3.0000
4.0000
5.0000
6.0000
7.0000
8.0000
9.0000
10.000
TIME (SECONDS)
THU, JAN 29 2009 15:51
NS WIND MW

2013 WINTER PEAK STORA MIN
NS-NB=0; NB-NE=500; CBX=732; ONI=961 ONS=851
1 PHASE FAULT ON TRENTON BUS-TIE BREAKER 50N604
5 CYCLES, NO RECLOSING, CLEARS WHOLE 138 KV STATION
FILE: d03-1ph_50n604-2013WP-NS-0.out
CHNL# 133: [VOLT199125 [ONSLOW 345.00]]
CHNL# 132: [VOLT199120 [HOPEWELL 345.00]]
CHNL# 131: [VOLT199045 [WOODBINE345.00]]
CHNL# 130: [VOLT190320 [SALBRY 345.00]]
CHNL# 128: [VOLT190004 [KESWICK 345.00]]
CHNL# 127: [VOLT 70002 [ORRINGTN345.00]]
1.1000
0.90000
0.0
1.0000
2.0000
3.0000
4.0000
5.0000
6.0000
7.0000
8.0000
9.0000
10.000
TIME (SECONDS)
THU, JAN 29 2009 15:51
"345KV VOLTAGE"

2013 WINTER PEAK STORA MIN
NS-NB=0; NB-NE=500; CBX=732; ONI=961 ONS=851
1 PHASE FAULT ON TRENTON BUS-TIE BREAKER 50N604
5 CYCLES, NO RECLOSING, CLEARS WHOLE 138 KV STATION
FILE: d03-1ph_50n604-2013WP-NS-0.out
CHNL# 125: 60*(1+[FREQ199125 [ONSLOW 345.00]])
CHNL# 124: 60*(1+[FREQ199120 [HOPEWELL 345.00]])
CHNL# 123: 60*(1+[FREQ199045 [WOODBINE345.00]])
CHNL# 122: 60*(1+[FREQ190320 [SALBRY 345.00]])
CHNL# 121: 60*(1+[FREQ190197 [C.COVE 345.00]])
CHNL# 120: 60*(1+[FREQ 70002 [ORRINGTN345.00]])
60.500
59.500
0.0
1.0000
2.0000
3.0000
4.0000
5.0000
6.0000
7.0000
8.0000
9.0000
10.000
TIME (SECONDS)
THU, JAN 29 2009 15:51
FREQUENCY HZ

2013 WINTER PEAK STORA MIN
NS-NB=0; NB-NE=500; CBX=732; ONI=961 ONS=851
1 PHASE FAULT ON TRENTON BUS-TIE BREAKER 50N604
5 CYCLES, NO RECLOSING, CLEARS WHOLE 138 KV STATION
FILE: d03-1ph_50n604-2013WP-NS-0.out
CHNL# 146: [VOLT199280 [TUSKET A138.00]]
CHNL# 145: [VOLT199193 [HHWAS 138.00]]
CHNL# 144: [VOLT199165 [TUFTCOVE138.00]]
CHNL# 143: [VOLT199138 [SPRNGHILL138.00]]
CHNL# 142: [VOLT199090 [50N-TREN138.00]]
CHNL# 141: [VOLT199051 [HASTINGS138.00]]
1.2000
0.70000
0.0
1.0000
2.0000
3.0000
4.0000
5.0000
6.0000
7.0000
8.0000
9.0000
10.000
TIME (SECONDS)
THU, JAN 29 2009 15:51
138KV BUS VOLTS

2013 WINTER PEAK STORA MIN
NS-NB=0; NB-NE=500; CBX=732; ONI=961 ONS=851
1 PHASE FAULT ON TRENTON BUS-TIE BREAKER 50N604
5 CYCLES, NO RECLOSING, CLEARS WHOLE 138 KV STATION
FILE: d03-1ph_50n604-2013WP-NS-0.out
CHNL# 140: [VOLT199240 [BWATER A230.00]]
CHNL# 139: [VOLT199200 [BRUSHY 230.00]]
CHNL# 138: [VOLT199130 [ONSLOW 230.00]]
CHNL# 137: [VOLT199050 [HASTINGS230.00]]
CHNL# 136: [VOLT199044 [PT.ACONI230.00]]
CHNL# 135: [VOLT199000 [LINGAN 230.00]]
1.2000
0.70000
0.0
1.0000
2.0000
3.0000
4.0000
5.0000
6.0000
7.0000
8.0000
9.0000
10.000
TIME (SECONDS)
THU, JAN 29 2009 15:51
230KV BUS VOLTS

2013 WINTER PEAK STORA MIN
NS-NB=0; NB-NE=500; CBX=732; ONI=961 ONS=851
1 PHASE FAULT ON TRENTON BUS-TIE BREAKER 50N604
5 CYCLES, NO RECLOSING, CLEARS WHOLE 138 KV STATION
FILE: d03-1ph_50n604-2013WP-NS-0.out
CHNL# 217: [L6533NMW]
CHNL# 215: [L6503MW]
CHNL# 197: [L8003MW]
CHNL# 195: [L8004MW]
CHNL# 193: [L8001MW]
CHNL# 221: [L3001MW]
250.00
500.00
1000.0
0.0
-250.0
-1000.
0.0
1.0000
2.0000
3.0000
4.0000
5.0000
6.0000
7.0000
8.0000
9.0000
10.000
TIME (SECONDS)
THU, JAN 29 2009 15:51
LINE FLOW MW

2013 WINTER PEAK STORA MIN
NS-NB=0; NB-NE=500; CBX=732; ONI=961 ONS=851
1 PHASE FAULT ON TRENTON BUS-TIE BREAKER 50N604
5 CYCLES, NO RECLOSING, CLEARS WHOLE 138 KV STATION
FILE: d03-1ph_50n604-2013WP-NS-0.out
CHNL# 154: [IR141-DIGBYH69.0 VOLTS]
CHNL# 153: [IR137-STATIG25.0 VOLTS]
CHNL# 152: [IR114-GLENDH138.0 VOLTS]
CHNL# 151: [IR84-DALHOHV230.0 VOLTS]
CHNL# 150: [IR82 NUTBHV69.0 VOLTS]
CHNL# 149: [IR45 AMHERTP138.0 VOLTS]
1.2000
0.70000
0.0
1.0000
2.0000
3.0000
4.0000
5.0000
6.0000
7.0000
8.0000
9.0000
10.000
TIME (SECONDS)
THU, JAN 29 2009 15:51
WIND BUS VOLTS

2013 WINTER PEAK STORA MIN
NS-NB=0; NB-NE=500; CBX=732; ONI=961 ONS=851
SLG FAULT ON LINGAN BREAKER 88S7211
TRIPS LINGAN 3 AND 4 IN 4 CYCLES
FILE: d04-88s721_1ph-2013WP-NS-0.out
CHNL# 20: [ANGL199169 [TUFTCV3 14.400] [3]] [ANGL156661 [DARL G1 22.000] [1]
CHNL# 17: [ANGL199086 [TRENTON613.800] [6]] [ANGL156661 [DARL G1 22.000] [1]
CHNL# 16: [ANGL199085 [TRENTN5 13.800] [5]] [ANGL156661 [DARL G1 22.000] [1]
CHNL# 15: [ANGL199061 [TMP1 STO13.800] [1]] [ANGL156661 [DARL G1 22.000] [1]
CHNL# 13: [ANGL199043 [ACONIG1 20.000] [1]] [ANGL156661 [DARL G1 22.000] [1]
CHNL# 11: [ANGL199001 [LINGAN1 14.400] [1]] [ANGL156661 [DARL G1 22.000] [1]
100.00
-100.0
50.000
-150.0
0.0
1.0000
2.0000
3.0000
4.0000
5.0000
6.0000
7.0000
8.0000
9.0000
10.000
TIME (SECONDS)
THU, JAN 29 2009 15:51
NS ANGLE

2013 WINTER PEAK STORA MIN
NS-NB=0; NB-NE=500; CBX=732; ONI=961 ONS=851
SLG FAULT ON LINGAN BREAKER 88S7211
TRIPS LINGAN 3 AND 4 IN 4 CYCLES
FILE: d04-88s721_1ph-2013WP-NS-0.out
CHNL# 10: [ANGL190472 [BLLDNG2 19.000] [1]] [ANGL156661 [DARL G1 22.000] [1]
CHNL# 6: [ANGL190456 [LEPRG1 26.000] [1]] [ANGL156661 [DARL G1 22.000] [1]
CHNL# 5: [ANGL190450 [MACTG1 13.800] [1]] [ANGL156661 [DARL G1 22.000] [1]
CHNL# 3: [ANGL126652 [RAV 3 22.000] [1]] [ANGL156661 [DARL G1 22.000] [1]
CHNL# 2: [ANGL101063 [MYST G7 22.000] [1]] [ANGL156661 [DARL G1 22.000] [1]
CHNL# 7: [ANGL190457 [C.CVG1 19.000] [1]] [ANGL156661 [DARL G1 22.000] [1]
100.00
-100.0
0.0
1.0000
2.0000
3.0000
4.0000
5.0000
6.0000
7.0000
8.0000
9.0000
10.000
TIME (SECONDS)
THU, JAN 29 2009 15:51
"NE,NY,NB ANGLE"

2013 WINTER PEAK STORA MIN
NS-NB=0; NB-NE=500; CBX=732; ONI=961 ONS=851
SLG FAULT ON LINGAN BREAKER 88S7211
TRIPS LINGAN 3 AND 4 IN 4 CYCLES
FILE: d04-88s721_1ph-2013WP-NS-0.out
CHNL# 59: [POWER199169 [TUFTCV3 14.400] [3]]
CHNL# 56: [POWER199086 [TRENTON613.800] [6]]
CHNL# 55: [POWER199085 [TRENTN5 13.800] [5]]
CHNL# 54: [POWER199061 [TMP1 STO13.800] [1]]
CHNL# 52: [POWER199043 [ACONIG1 20.000] [1]]
CHNL# 50: [POWER199001 [LINGAN1 14.400] [1]]
2.5000
0.0
1.0000
-1.500
2.0000
3.0000
4.0000
5.0000
6.0000
7.0000
8.0000
9.0000
10.000
TIME (SECONDS)
THU, JAN 29 2009 15:51
NS MW

2013 WINTER PEAK STORA MIN
NS-NB=0; NB-NE=500; CBX=732; ONI=961 ONS=851
SLG FAULT ON LINGAN BREAKER 88S7211
TRIPS LINGAN 3 AND 4 IN 4 CYCLES
FILE: d04-88s721_1ph-2013WP-NS-0.out
CHNL# 49: [POWER190472 [BLLDNG2 19.000] [1]]
CHNL# 45: [POWER190456 [LEPRG1 26.000] [1]]
CHNL# 44: [POWER190450 [MACTG1 13.800] [1]]
CHNL# 42: [POWER126652 [RAV 3 22.000] [1]]
CHNL# 41: [POWER101063 [MYST G7 22.000] [1]]
CHNL# 46: [POWER190457 [C.CVG1 19.000] [1]]
7.0000
2.0000
9.0000
4.0000
5.0000
0.0
6.5000
1.0000
5.0000
0.0
1.0000
2.0000
3.0000
4.0000
5.0000
6.0000
7.0000
8.0000
9.0000
10.000
TIME (SECONDS)
THU, JAN 29 2009 15:51
"NE,NY,NB POWER"

2013 WINTER PEAK STORA MIN
NS-NB=0; NB-NE=500; CBX=732; ONI=961 ONS=851
SLG FAULT ON LINGAN BREAKER 88S7211
TRIPS LINGAN 3 AND 4 IN 4 CYCLES
FILE: d04-88s721_1ph-2013WP-NS-0.out
CHNL# 119: [VARS IR141-DIGBY]
CHNL# 118: [VARS IR137-STATIA]
CHNL# 117: [VARS IR114-GLENDHU]
CHNL# 116: [VARS IR84-DALHOUSIE]
CHNL# 115: [VARS IR82_NUTTBY]
CHNL# 114: [VARS IR45_AMHERST]
0.50000
-0.5000
0.0
1.0000
2.0000
3.0000
4.0000
5.0000
6.0000
7.0000
8.0000
9.0000
10.000
TIME (SECONDS)
THU, JAN 29 2009 15:51
NS WIND MV

2013 WINTER PEAK STORA MIN
NS-NB=0; NB-NE=500; CBX=732; ONI=961 ONS=851
SLG FAULT ON LINGAN BREAKER 88S7211
TRIPS LINGAN 3 AND 4 IN 4 CYCLES
FILE: d04-88s721_1ph-2013WP-NS-0.out
CHNL# 79: [POWER IR141-DIGBY]
CHNL# 78: [POWER IR137-STATIA]
CHNL# 77: [POWER IR114-GLENDHU]
CHNL# 76: [POWER IR84-DALHOUSIE]
CHNL# 75: [POWER IR82_NUTTBY]
CHNL# 74: [POWER IR45_AMHERST]
1.0000
0.0
0.0
1.0000
2.0000
3.0000
4.0000
5.0000
6.0000
7.0000
8.0000
9.0000
10.000
TIME (SECONDS)
THU, JAN 29 2009 15:51
NS WIND MW

2013 WINTER PEAK STORA MIN
NS-NB=0; NB-NE=500; CBX=732; ONI=961 ONS=851
SLG FAULT ON LINGAN BREAKER 88S7211
TRIPS LINGAN 3 AND 4 IN 4 CYCLES
FILE: d04-88s721_1ph-2013WP-NS-0.out
CHNL# 133: [VOLT199125 IONSLOW 345.00]
CHNL# 132: [VOLT199120 IHOPEWELL345.00]
CHNL# 131: [VOLT199045 IWOODBINE345.00]
CHNL# 130: [VOLT190320 ISALBRY 345.00]
CHNL# 128: [VOLT190004 IKESWICK 345.00]
CHNL# 127: [VOLT 70002 IORRINGTN345.00]
0.90000
1.1000
0.0
1.0000
2.0000
3.0000
4.0000
5.0000
6.0000
7.0000
8.0000
9.0000
10.000
TIME (SECONDS)
THU, JAN 29 2009 15:51
"345KV VOLTAGE"

2013 WINTER PEAK STORA MIN
NS-NB=0; NB-NE=500; CBX=732; ONI=961 ONS=851
SLG FAULT ON LINGAN BREAKER 88S7211
TRIPS LINGAN 3 AND 4 IN 4 CYCLES
FILE: d04-88s721_1ph-2013WP-NS-0.out
CHNL# 125: 60*(1+[FREQ199125 IONSLOW 345.00])
CHNL# 124: 60*(1+[FREQ199120 IHOPEWELL345.00])
CHNL# 123: 60*(1+[FREQ199045 IWOODBINE345.00])
CHNL# 122: 60*(1+[FREQ190320 ISALBRY 345.00])
CHNL# 121: 60*(1+[FREQ190197 IC.COVE 345.00])
CHNL# 120: 60*(1+[FREQ 70002 IORRINGTN345.00])
60.500
59.500
0.0
1.0000
2.0000
3.0000
4.0000
5.0000
6.0000
7.0000
8.0000
9.0000
10.000
TIME (SECONDS)
THU, JAN 29 2009 15:51
FREQUENCY HZ

2013 WINTER PEAK STORA MIN
NS-NB=0; NB-NE=500; CBX=732; ONI=961 ONS=851
SLG FAULT ON LINGAN BREAKER 88S7211
TRIPS LINGAN 3 AND 4 IN 4 CYCLES
FILE: d04-88s721_1ph-2013WP-NS-0.out
CHNL# 146: [VOLT199280 [TUSKET A138.00]]
CHNL# 145: [VOLT199193 [HHWAS 138.00]]
CHNL# 144: [VOLT199165 [TUFTCOVE138.00]]
CHNL# 143: [VOLT199135 [SPRNGHLL138.00]]
CHNL# 142: [VOLT199090 [SON-TREN138.00]]
CHNL# 141: [VOLT199051 [HASTINGS138.00]]
1.2000
0.70000
0.0
1.0000
2.0000
3.0000
4.0000
5.0000
6.0000
7.0000
8.0000
9.0000
10.000
TIME (SECONDS)
THU, JAN 29 2009 15:51
138KV BUS VOLTS

2013 WINTER PEAK STORA MIN
NS-NB=0; NB-NE=500; CBX=732; ONI=961 ONS=851
SLG FAULT ON LINGAN BREAKER 88S7211
TRIPS LINGAN 3 AND 4 IN 4 CYCLES
FILE: d04-88s721_1ph-2013WP-NS-0.out
CHNL# 140: [VOLT199240 [BWATER A230.00]]
CHNL# 139: [VOLT199200 [BRUSHY 230.00]]
CHNL# 138: [VOLT199130 [ONSLOW 230.00]]
CHNL# 137: [VOLT199050 [HASTINGS230.00]]
CHNL# 136: [VOLT199044 [PT.ACONI230.00]]
CHNL# 135: [VOLT199000 [LINGAN 230.00]]
1.2000
0.70000
0.0
1.0000
2.0000
3.0000
4.0000
5.0000
6.0000
7.0000
8.0000
9.0000
10.000
TIME (SECONDS)
THU, JAN 29 2009 15:51
230KV BUS VOLTS

2013 WINTER PEAK STORA MIN
NS-NB=0; NB-NE=500; CBX=732; ONI=961 ONS=851
SLG FAULT ON LINGAN BREAKER 88S7211
TRIPS LINGAN 3 AND 4 IN 4 CYCLES
FILE: d04-88s721_1ph-2013WP-NS-0.out
CHNL# 217: [L6513MW]
CHNL# 215: [L6503MW]
CHNL# 197: [L8003MW]
CHNL# 195: [L8004MW]
CHNL# 193: [L8001MW]
CHNL# 221: [L3001MW]
250.00
-250.0
500.00
0.0
1000.0
-1000.
0.0
1.0000
2.0000
3.0000
4.0000
5.0000
6.0000
7.0000
8.0000
9.0000
10.000
TIME (SECONDS)
THU, JAN 29 2009 15:51
LINE FLOW MW

2013 WINTER PEAK STORA MIN
NS-NB=0; NB-NE=500; CBX=732; ONI=961 ONS=851
SLG FAULT ON LINGAN BREAKER 88S7211
TRIPS LINGAN 3 AND 4 IN 4 CYCLES
FILE: d04-88s721_1ph-2013WP-NS-0.out
CHNL# 154: [IR141-DIGBYH69.0 VOLTS]
CHNL# 153: [IR137-STATIG25.0 VOLTS]
CHNL# 152: [IR114-GLENDH138.0 VOLTS]
CHNL# 151: [IR84-DALHOHV230.0 VOLTS]
CHNL# 150: [IR82-NUTBHV69.0 VOLTS]
CHNL# 149: [IR45-AMHERTP138.0 VOLTS]
1.2000
0.70000
0.0
1.0000
2.0000
3.0000
4.0000
5.0000
6.0000
7.0000
8.0000
9.0000
10.000
TIME (SECONDS)
THU, JAN 29 2009 15:51
WIND BUS VOLTS

2013 WINTER PEAK STORA MIN
NS-NB=0; NB-NE=500; CBX=732; ONI=961 ONS=851
SLG FAULT ON ONSLOW BREAKER 1N600
CLEARS ONSLOW 138KV AND RADIAL LINES
FILE: d05-1n600_1ph-2013WP-NS-0.out
CHNL#S 20.4: [ANGL199169 [TUFTCV3 14.400] [3] [ANGL156661 [DARL G1 22.000] [1
CHNL#S 17.4: [ANGL199086 [TRENTON613.800] [6]] [ANGL156661 [DARL G1 22.000] [1
CHNL#S 16.4: [ANGL199085 [TRENTN5 13.800] [5]] [ANGL156661 [DARL G1 22.000] [1
CHNL#S 15.4: [ANGL199061 [TMP1 STO13.800] [1]] [ANGL156661 [DARL G1 22.000] [1
CHNL#S 13.4: [ANGL199043 [ACONIG1 20.000] [1]] [ANGL156661 [DARL G1 22.000] [1
CHNL#S 11.4: [ANGL199001 [LINGAN1 14.400] [1]] [ANGL156661 [DARL G1 22.000] [1
100.00
-100.0
0.0
1.0000
2.0000
3.0000
4.0000
5.0000
6.0000
7.0000
8.0000
9.0000
10.000
TIME (SECONDS)
THU, JAN 29 2009 15:51
NS ANGLE

2013 WINTER PEAK STORA MIN
NS-NB=0; NB-NE=500; CBX=732; ONI=961 ONS=851
SLG FAULT ON ONSLOW BREAKER 1N600
CLEARS ONSLOW 138KV AND RADIAL LINES
FILE: d05-1n600_1ph-2013WP-NS-0.out
CHNL#S 10.4: [ANGL190472 [BLLDNG2 19.000] [1]] [ANGL156661 [DARL G1 22.000] [1
CHNL#S 6.4: [ANGL190456 [LEPRG1 26.000] [1]] [ANGL156661 [DARL G1 22.000] [1
CHNL#S 5.4: [ANGL190450 [MACTG1 13.800] [1]] [ANGL156661 [DARL G1 22.000] [1
CHNL#S 3.4: [ANGL126652 [RAV 3 22.000] [1]] [ANGL156661 [DARL G1 22.000] [1
CHNL#S 2.4: [ANGL101063 [MYST G7 22.000] [1]] [ANGL156661 [DARL G1 22.000] [1
CHNL#S 7.4: [ANGL190457 [C.CVG1 19.000] [1]] [ANGL156661 [DARL G1 22.000] [1
100.00
-100.0
0.0
1.0000
2.0000
3.0000
4.0000
5.0000
6.0000
7.0000
8.0000
9.0000
10.000
TIME (SECONDS)
THU, JAN 29 2009 15:51
"NE,NY,NB ANGLE"

2013 WINTER PEAK STORA MIN
NS-NB=0; NB-NE=500; CBX=732; ONI=961 ONS=851
SLG FAULT ON ONSLOW BREAKER 1N600
CLEARS ONSLOW 138KV AND RADIAL LINES
FILE: d05-1n600_1ph-2013WP-NS-0.out
CHNL# 59: [POWER199169 [TUFTCV3 14.400] [3]]
CHNL# 56: [POWER199086 [TRENTON613.800] [6]]
CHNL# 55: [POWER199085 [TRENTN5 13.800] [5]]
CHNL# 54: [POWER199061 [TMP1 STO13.800] [1]]
CHNL# 52: [POWER199043 [ACONIG1 20.000] [1]]
CHNL# 50: [POWER199001 [LINGAN1 14.400] [1]]
2.5000
1.0000
-1.500
0.0
0.0
1.0000
2.0000
3.0000
4.0000
5.0000
6.0000
7.0000
8.0000
9.0000
10.000
TIME (SECONDS)
THU, JAN 29 2009 15:51
NS MW

2013 WINTER PEAK STORA MIN
NS-NB=0; NB-NE=500; CBX=732; ONI=961 ONS=851
SLG FAULT ON ONSLOW BREAKER 1N600
CLEARS ONSLOW 138KV AND RADIAL LINES
FILE: d05-1n600_1ph-2013WP-NS-0.out
CHNL# 49: [POWER190472 [BLLDNG2 19.000] [1]]
CHNL# 45: [POWER190456 [LEPRG1 26.000] [1]]
CHNL# 44: [POWER190450 [MACTG1 13.800] [1]]
CHNL# 42: [POWER126652 [RAV 3 22.000] [1]]
CHNL# 41: [POWER101063 [MYST G7 22.000] [1]]
CHNL# 46: [POWER190457 [C.CVG1 19.000] [1]]
7.0000
9.0000
5.0000
5.0000
6.5000
5.0000
2.0000
4.0000
0.0
0.0
1.0000
0.0
0.0
1.0000
2.0000
3.0000
4.0000
5.0000
6.0000
7.0000
8.0000
9.0000
10.000
TIME (SECONDS)
THU, JAN 29 2009 15:51
"NE,NY,NB POWER"

NS WIND MV

NS WIND MW

"345KV VOLTAGE"

FREQUENCY HZ

2013 WINTER PEAK STORA MIN
NS-NB=0; NB-NE=500; CBX=732; ONI=961 ONS=851
SLG FAULT ON ONSLOW BREAKER 1N600
CLEARS ONSLOW 138KV AND RADIAL LINES
FILE: d05-1n600_1ph-2013WP-NS-0.out
CHNL# 146: [VOLT199280 [TUSKET A138.00]]
CHNL# 145: [VOLT199193 [1H-WAS 138.00]]
CHNL# 144: [VOLT199165 [TUFTCOVE138.00]]
CHNL# 143: [VOLT199138: [SPRNGHILL138.00]]
CHNL# 142: [VOLT199090 [50N-TREN138.00]]
CHNL# 141: [VOLT199051 [HASTINGS138.00]]
TIME (SECONDS)
THU, JAN 29 2009 15:51
138KV BUS VOLTS

2013 WINTER PEAK STORA MIN
NS-NB=0; NB-NE=500; CBX=732; ONI=961 ONS=851
SLG FAULT ON ONSLOW BREAKER 1N600
CLEARS ONSLOW 138KV AND RADIAL LINES
FILE: d05-1n600_1ph-2013WP-NS-0.out
CHNL# 140: [VOLT199240 [BWATER A230.00]]
CHNL# 139: [VOLT199200 [BRUSHY 230.00]]
CHNL# 138: [VOLT199130 [ONSLOW 230.00]]
CHNL# 137: [VOLT199050 [HASTINGS230.00]]
CHNL# 136: [VOLT199044 [PT.ACONI230.00]]
CHNL# 135: [VOLT199000 [LINGAN 230.00]]
TIME (SECONDS)
THU, JAN 29 2009 15:51
230KV BUS VOLTS

2013 WINTER PEAK STORA MIN
NS-NB=0; NB-NE=500; CBX=732; ONI=961 ONS=851
SLG FAULT ON ONSLOW BREAKER 1N600
CLEARS ONSLOW 138KV AND RADIAL LINES
FILE: d05-1n600_1ph-2013WP-NS-0.out
CHNL# 217: [L6513NWM]
CHNL# 215: [L6503MW]
CHNL# 197: [L8003MW]
CHNL# 195: [L8004MW]
CHNL# 193: [L8001MW]
CHNL# 221: [L3001MW]
TIME (SECONDS)
THU, JAN 29 2009 15:51
LINE FLOW MW

2013 WINTER PEAK STORA MIN
NS-NB=0; NB-NE=500; CBX=732; ONI=961 ONS=851
SLG FAULT ON ONSLOW BREAKER 1N600
CLEARS ONSLOW 138KV AND RADIAL LINES
FILE: d05-1n600_1ph-2013WP-NS-0.out
CHNL# 154: [IR141-DIGBYH69.0 VOLTS]
CHNL# 153: [IR137-STATIG25.0 VOLTS]
CHNL# 152: [IR114-GLENDH138.0 VOLTS]
CHNL# 151: [IR84-DALHOHV230.0 VOLTS]
CHNL# 150: [IR82-NUTBHV69.0 VOLTS]
CHNL# 149: [IR45-AMHERTP138.0 VOLTS]
TIME (SECONDS)
THU, JAN 29 2009 15:51
WIND BUS VOLTS

2013 WINTER PEAK STORA MIN
NS-NB=0; NB-NE=500; CBX=732; ONI=961 ONS=851
LOSE TUFTS COVE 3
NO FAULT
FILE: e02-lose-tc3-2013WP-NS-0.out
CHNL#S 20.4: [ANGL199169 [TUFTCV3 14.400] [3]] [ANGL156661 [DARL G1 22.000] [1]] 100.00 -100.0
CHNL#S 17.4: [ANGL199086 [TRENTON613.800] [6]] [ANGL156661 [DARL G1 22.000] [1]] 100.00 -100.0
CHNL#S 16.4: [ANGL199085 [TRENTN5 13.800] [5]] [ANGL156661 [DARL G1 22.000] [1]] 100.00 -100.0
CHNL#S 15.4: [ANGL199061 [TMP1 STO13.800] [1]] [ANGL156661 [DARL G1 22.000] [1]] 50.000 -150.0
CHNL#S 13.4: [ANGL199043 [ACONIG1 20.000] [1]] [ANGL156661 [DARL G1 22.000] [1]] 100.00 -100.0
CHNL#S 11.4: [ANGL199001 [LINGAN1 14.400] [1]] [ANGL156661 [DARL G1 22.000] [1]] 100.00 -100.0
0.0 1.0000 2.0000 3.0000 4.0000 5.0000 6.0000 7.0000 8.0000 9.0000 10.000
TIME (SECONDS)
THU, JAN 29 2009 15:51
NS ANGLE

2013 WINTER PEAK STORA MIN
NS-NB=0; NB-NE=500; CBX=732; ONI=961 ONS=851
LOSE TUFTS COVE 3
NO FAULT
FILE: e02-lose-tc3-2013WP-NS-0.out
CHNL#S 10.4: [ANGL190472 [BLLDNG2 19.000] [1]] [ANGL156661 [DARL G1 22.000] [1]] 100.00 -100.0
CHNL#S 6.4: [ANGL190456 [LEPRG1 26.000] [1]] [ANGL156661 [DARL G1 22.000] [1]] 100.00 -100.0
CHNL#S 5.4: [ANGL190450 [MACTG1 13.800] [1]] [ANGL156661 [DARL G1 22.000] [1]] 100.00 -100.0
CHNL#S 3.4: [ANGL126652 [RAV 3 22.000] [1]] [ANGL156661 [DARL G1 22.000] [1]] 100.00 -100.0
CHNL#S 2.4: [ANGL101063 [MYST G7 22.000] [1]] [ANGL156661 [DARL G1 22.000] [1]] 100.00 -100.0
CHNL#S 7.4: [ANGL190457 [C.CVG1 19.000] [1]] [ANGL156661 [DARL G1 22.000] [1]] 100.00 -100.0
0.0 1.0000 2.0000 3.0000 4.0000 5.0000 6.0000 7.0000 8.0000 9.0000 10.000
TIME (SECONDS)
THU, JAN 29 2009 15:51
"NE,NY,NB ANGLE"

2013 WINTER PEAK STORA MIN
NS-NB=0; NB-NE=500; CBX=732; ONI=961 ONS=851
LOSE TUFTS COVE 3
NO FAULT
FILE: e02-lose-tc3-2013WP-NS-0.out
CHNL# 59: [POWER199169 [TUFTCV3 14.400] [3]] 2.5000 0.0
CHNL# 56: [POWER199086 [TRENTON613.800] [6]] 2.5000 0.0
CHNL# 55: [POWER199085 [TRENTN5 13.800] [5]] 2.5000 0.0
CHNL# 54: [POWER199061 [TMP1 STO13.800] [1]] 1.0000 -1.500
CHNL# 52: [POWER199043 [ACONIG1 20.000] [1]] 2.5000 0.0
CHNL# 50: [POWER199001 [LINGAN1 14.400] [1]] 2.5000 0.0
0.0 1.0000 2.0000 3.0000 4.0000 5.0000 6.0000 7.0000 8.0000 9.0000 10.000
TIME (SECONDS)
THU, JAN 29 2009 15:51
NS MW

2013 WINTER PEAK STORA MIN
NS-NB=0; NB-NE=500; CBX=732; ONI=961 ONS=851
LOSE TUFTS COVE 3
NO FAULT
FILE: e02-lose-tc3-2013WP-NS-0.out
CHNL# 49: [POWER190472 [BLLDNG2 19.000] [1]] 7.0000 2.0000
CHNL# 45: [POWER190456 [LEPRG1 26.000] [1]] 9.0000 4.0000
CHNL# 44: [POWER190450 [MACTG1 13.800] [1]] 5.0000 0.0
CHNL# 42: [POWER126652 [RAV 3 22.000] [1]] 5.0000 0.0
CHNL# 41: [POWER101063 [MYST G7 22.000] [1]] 6.5000 1.0000
CHNL# 46: [POWER190457 [C.CVG1 19.000] [1]] 5.0000 0.0
0.0 1.0000 2.0000 3.0000 4.0000 5.0000 6.0000 7.0000 8.0000 9.0000 10.000
TIME (SECONDS)
THU, JAN 29 2009 15:51
"NE,NY,NB POWER"

2013 WINTER PEAK STORA MIN
NS-NB=0; NB-NE=500; CBX=732; ONI=961 ONS=851
LOSE TUFTS COVE 3
NO FAULT
FILE: e02-lose-tc3-2013WP-NS-0.out
CHNL# 119: [VARS IR141-DIGBY]
CHNL# 118: [VARS IR137-STATIA]
CHNL# 117: [VARS IR114-GLENDHU]
CHNL# 116: [VARS IR84-DALHOUSIE]
CHNL# 115: [VARS IR82_NUTTBY]
CHNL# 114: [VARS IR45_AMHERST]
0.50000
-0.5000
TIME (SECONDS)
THU, JAN 29 2009 15:51
NS WIND MV

2013 WINTER PEAK STORA MIN
NS-NB=0; NB-NE=500; CBX=732; ONI=961 ONS=851
LOSE TUFTS COVE 3
NO FAULT
FILE: e02-lose-tc3-2013WP-NS-0.out
CHNL# 79: [POWER IR141-DIGBY]
CHNL# 78: [POWER IR137-STATIA]
CHNL# 77: [POWER IR114-GLENDHU]
CHNL# 76: [POWER IR84-DALHOUSIE]
CHNL# 75: [POWER IR82_NUTTBY]
CHNL# 74: [POWER IR45_AMHERST]
1.0000
0.0
TIME (SECONDS)
THU, JAN 29 2009 15:51
NS WIND MW

2013 WINTER PEAK STORA MIN
NS-NB=0; NB-NE=500; CBX=732; ONI=961 ONS=851
LOSE TUFTS COVE 3
NO FAULT
FILE: e02-lose-tc3-2013WP-NS-0.out
CHNL# 133: [VOLT199125 [ONSLOW 345.00]]
CHNL# 132: [VOLT199120 [HOPEWELL 345.00]]
CHNL# 131: [VOLT199045 [WOODBINE345.00]]
CHNL# 130: [VOLT190320 [SALBRY 345.00]]
CHNL# 128: [VOLT190004 [KESWICK 345.00]]
CHNL# 127: [VOLT 70002 [ORRINGTN345.00]]
1.1000
0.90000
TIME (SECONDS)
THU, JAN 29 2009 15:51
"345KV VOLTAGE"

2013 WINTER PEAK STORA MIN
NS-NB=0; NB-NE=500; CBX=732; ONI=961 ONS=851
LOSE TUFTS COVE 3
NO FAULT
FILE: e02-lose-tc3-2013WP-NS-0.out
CHNL# 125: 60*(1+[FREQ199125 [ONSLOW 345.00]])
CHNL# 124: 60*(1+[FREQ199120 [HOPEWELL 345.00]])
CHNL# 123: 60*(1+[FREQ199045 [WOODBINE 345.00]])
CHNL# 122: 60*(1+[FREQ190320 [SALBRY 345.00]])
CHNL# 121: 60*(1+[FREQ190197 [C.COVE 345.00]])
CHNL# 120: 60*(1+[FREQ 70002 [ORRINGTN345.00]])
60.500
59.500
TIME (SECONDS)
THU, JAN 29 2009 15:51
FREQUENCY HZ

2013 WINTER PEAK STORA MIN
NS-NB=0; NB-NE=500; CBX=732; ONI=961 ONS=851
LOSE TUFTS COVE 3
NO FAULT
FILE: e02-lose-tc3-2013WP-NS-0.out
CHNL# 145: [VOLT199193 [HHWAS 138.00]]
CHNL# 144: [VOLT199165 [TUFTCOVE138.00]]
CHNL# 143: [VOLT199135 [SPRNGHLL138.00]]
CHNL# 142: [VOLT199090 [SON-TREN138.00]]
CHNL# 141: [VOLT199051 [HASTINGS138.00]]
CHNL# 146: [VOLT199280 [TUSKET A138.00]]
1.2000
0.70000
0.0
1.0000
2.0000
3.0000
4.0000
5.0000
6.0000
7.0000
8.0000
9.0000
10.000
TIME (SECONDS)
THU, JAN 29 2009 15:51
138KV BUS VOLTS

2013 WINTER PEAK STORA MIN
NS-NB=0; NB-NE=500; CBX=732; ONI=961 ONS=851
LOSE TUFTS COVE 3
NO FAULT
FILE: e02-lose-tc3-2013WP-NS-0.out
CHNL# 139: [VOLT199200 [BRUSHY 230.00]]
CHNL# 138: [VOLT199130 [ONSLOW 230.00]]
CHNL# 137: [VOLT199050 [HASTINGS230.00]]
CHNL# 136: [VOLT199044 [PT.ACONI230.00]]
CHNL# 135: [VOLT199000 [LINGAN 230.00]]
CHNL# 140: [VOLT199240 [BWATER A230.00]]
1.2000
0.70000
0.0
1.0000
2.0000
3.0000
4.0000
5.0000
6.0000
7.0000
8.0000
9.0000
10.000
TIME (SECONDS)
THU, JAN 29 2009 15:51
230KV BUS VOLTS

2013 WINTER PEAK STORA MIN
NS-NB=0; NB-NE=500; CBX=732; ONI=961 ONS=851
LOSE TUFTS COVE 3
NO FAULT
FILE: e02-lose-tc3-2013WP-NS-0.out
CHNL# 215: [L6503MW1]
CHNL# 197: [L8003MW1]
CHNL# 195: [L8004MW1]
CHNL# 193: [L8001MW1]
CHNL# 221: [L3001MW1]
CHNL# 217: [L6533MW1]
250.00
500.00
1000.0
0.0
-250.0
-1000.
TIME (SECONDS)
THU, JAN 29 2009 15:51
LINE FLOW MW

2013 WINTER PEAK STORA MIN
NS-NB=0; NB-NE=500; CBX=732; ONI=961 ONS=851
LOSE TUFTS COVE 3
NO FAULT
FILE: e02-lose-tc3-2013WP-NS-0.out
CHNL# 153: [IR137-STATIG25.0 VOLTS]
CHNL# 152: [IR114-GLENDH138.0 VOLTS]
CHNL# 151: [IR84-DALHOHV230.0 VOLTS]
CHNL# 150: [IR82-NUTBHV69.0 VOLTS]
CHNL# 149: [IR45-AMHERTP138.0 VOLTS]
CHNL# 154: [IR141-DIGBYH69.0 VOLTS]
1.2000
0.70000
0.0
1.0000
2.0000
3.0000
4.0000
5.0000
6.0000
7.0000
8.0000
9.0000
10.000
TIME (SECONDS)
THU, JAN 29 2009 15:51
WIND BUS VOLTS

2013 WINTER PEAK STORA MIN
NS-NB=0; NB-NE=500; CBX=732; ONI=961 ONS=851
LOSE ALL LOAD AT STRA
NO FAULT
FILE: e03-lose-stora-2013WP-NS-0.out
CHNL#S 20.4: [ANGL199169 [TUFTCV3 14.400] [3]] [ANGL156661 [DARL G1 22.000] [1
CHNL#S 17.4: [ANGL199086 [TRENTON613.800] [6]] [ANGL156661 [DARL G1 22.000] [1
CHNL#S 16.4: [ANGL199085 [TRENTN5 13.800] [5]] [ANGL156661 [DARL G1 22.000] [1
CHNL#S 15.4: [ANGL199061 [TMP1 STO13.800] [1]] [ANGL156661 [DARL G1 22.000] [1
CHNL#S 13.4: [ANGL199043 [ACONIG1 20.000] [1]] [ANGL156661 [DARL G1 22.000] [1
CHNL#S 11.4: [ANGL199001 [LINGAN1 14.400] [1]] [ANGL156661 [DARL G1 22.000] [1
100.00
-100.0
50.000
-150.0
0.0
1.0000
2.0000
3.0000
4.0000
5.0000
6.0000
7.0000
8.0000
9.0000
10.000
TIME (SECONDS)
THU, JAN 29 2009 15:51
NS ANGLE

2013 WINTER PEAK STORA MIN
NS-NB=0; NB-NE=500; CBX=732; ONI=961 ONS=851
LOSE ALL LOAD AT STRA
NO FAULT
FILE: e03-lose-stora-2013WP-NS-0.out
CHNL#S 10.4: [ANGL190472 [BLLDNG2 19.000] [1]] [ANGL156661 [DARL G1 22.000] [1
CHNL#S 6.4: [ANGL190456 [LEPRG1 26.000] [1]] [ANGL156661 [DARL G1 22.000] [1
CHNL#S 5.4: [ANGL190450 [MACTG1 13.800] [1]] [ANGL156661 [DARL G1 22.000] [1
CHNL#S 3.4: [ANGL126652 [RAV 3 22.000] [1]] [ANGL156661 [DARL G1 22.000] [1
CHNL#S 2.4: [ANGL101063 [MYST G7 22.000] [1]] [ANGL156661 [DARL G1 22.000] [1
CHNL#S 7.4: [ANGL190457 [C.CVG1 19.000] [1]] [ANGL156661 [DARL G1 22.000] [1
100.00
-100.0
0.0
1.0000
2.0000
3.0000
4.0000
5.0000
6.0000
7.0000
8.0000
9.0000
10.000
TIME (SECONDS)
THU, JAN 29 2009 15:51
"NE,NY,NB ANGLE"

2013 WINTER PEAK STORA MIN
NS-NB=0; NB-NE=500; CBX=732; ONI=961 ONS=851
LOSE ALL LOAD AT STRA
NO FAULT
FILE: e03-lose-stora-2013WP-NS-0.out
CHNL# 59: [POWER199169 [TUFTCV3 14.400] [3]]
CHNL# 56: [POWER199086 [TRENTON613.800] [6]]
CHNL# 55: [POWER199085 [TRENTN5 13.800] [5]]
CHNL# 54: [POWER199061 [TMP1 STO13.800] [1]]
CHNL# 52: [POWER199043 [ACONIG1 20.000] [1]]
CHNL# 50: [POWER199001 [LINGAN1 14.400] [1]]
2.5000
0.0
1.0000
-1.500
0.0
1.0000
2.0000
3.0000
4.0000
5.0000
6.0000
7.0000
8.0000
9.0000
10.000
TIME (SECONDS)
THU, JAN 29 2009 15:51
NS MW

2013 WINTER PEAK STORA MIN
NS-NB=0; NB-NE=500; CBX=732; ONI=961 ONS=851
LOSE ALL LOAD AT STRA
NO FAULT
FILE: e03-lose-stora-2013WP-NS-0.out
CHNL# 49: [POWER190472 [BLLDNG2 19.000] [1]]
CHNL# 45: [POWER190456 [LEPRG1 26.000] [1]]
CHNL# 44: [POWER190450 [MACTG1 13.800] [1]]
CHNL# 42: [POWER126652 [RAV 3 22.000] [1]]
CHNL# 41: [POWER101063 [MYST G7 22.000] [1]]
CHNL# 46: [POWER190457 [C.CVG1 19.000] [1]]
7.0000
2.0000
9.0000
4.0000
5.0000
0.0
5.0000
0.0
6.5000
1.0000
5.0000
0.0
1.0000
2.0000
3.0000
4.0000
5.0000
6.0000
7.0000
8.0000
9.0000
10.000
TIME (SECONDS)
THU, JAN 29 2009 15:51
"NE,NY,NB POWER"

2013 WINTER PEAK STORA MIN
NS-NB=0; NB-NE=500; CBX=732; ONI=961 ONS=851
LOSE ALL LOAD AT STRA
NO FAULT
FILE: e03-lose-stora-2013WP-NS-0.out
CHNL# 119: [VARS IR141-DIGBY]
CHNL# 118: [VARS IR137-STATIA]
CHNL# 117: [VARS IR114-GLENDHU]
CHNL# 116: [VARS IR84-DALHOUSIE]
CHNL# 115: [VARS IR82_NUTTBY]
CHNL# 114: [VARS IR45_AMHERST]
0.50000
-0.5000
0.0
1.0000
2.0000
3.0000
4.0000
5.0000
6.0000
7.0000
8.0000
9.0000
10.000
TIME (SECONDS)
THU, JAN 29 2009 15:51
NS WIND MV

2013 WINTER PEAK STORA MIN
NS-NB=0; NB-NE=500; CBX=732; ONI=961 ONS=851
LOSE ALL LOAD AT STRA
NO FAULT
FILE: e03-lose-stora-2013WP-NS-0.out
CHNL# 79: [POWER IR141-DIGBY]
CHNL# 78: [POWER IR137-STATIA]
CHNL# 77: [POWER IR114-GLENDHU]
CHNL# 76: [POWER IR84-DALHOUSIE]
CHNL# 75: [POWER IR82_NUTTBY]
CHNL# 74: [POWER IR45_AMHERST]
1.0000
0.0
0.0
1.0000
2.0000
3.0000
4.0000
5.0000
6.0000
7.0000
8.0000
9.0000
10.000
TIME (SECONDS)
THU, JAN 29 2009 15:51
NS WIND MW

2013 WINTER PEAK STORA MIN
NS-NB=0; NB-NE=500; CBX=732; ONI=961 ONS=851
LOSE ALL LOAD AT STRA
NO FAULT
FILE: e03-lose-stora-2013WP-NS-0.out
CHNL# 133: [VOLT199125 [ONSLOW 345.00]]
CHNL# 132: [VOLT199120 [HOPEWELL 345.00]]
CHNL# 131: [VOLT199045 [WOODBINE345.00]]
CHNL# 130: [VOLT190320 [SALBRY 345.00]]
CHNL# 128: [VOLT190004 [KESWICK 345.00]]
CHNL# 127: [VOLT 70002 [ORRINGTN345.00]]
1.1000
0.90000
0.0
1.0000
2.0000
3.0000
4.0000
5.0000
6.0000
7.0000
8.0000
9.0000
10.000
TIME (SECONDS)
THU, JAN 29 2009 15:51
"345KV VOLTAGE"

2013 WINTER PEAK STORA MIN
NS-NB=0; NB-NE=500; CBX=732; ONI=961 ONS=851
LOSE ALL LOAD AT STRA
NO FAULT
FILE: e03-lose-stora-2013WP-NS-0.out
CHNL# 125: 60*(1+[FREQ199125 [ONSLOW 345.00]])
CHNL# 124: 60*(1+[FREQ199120 [HOPEWELL 345.00]])
CHNL# 123: 60*(1+[FREQ199045 [WOODBINE345.00]])
CHNL# 122: 60*(1+[FREQ190320 [SALBRY 345.00]])
CHNL# 121: 60*(1+[FREQ190197 [C.COVE 345.00]])
CHNL# 120: 60*(1+[FREQ 70002 [ORRINGTN345.00]])
60.500
59.500
0.0
1.0000
2.0000
3.0000
4.0000
5.0000
6.0000
7.0000
8.0000
9.0000
10.000
TIME (SECONDS)
THU, JAN 29 2009 15:51
FREQUENCY HZ

2013 WINTER PEAK STORA MIN
NS-NB=0; NB-NE=500; CBX=732; ONI=961 ONS=851
LOSE ALL LOAD AT STRA
NO FAULT
FILE: e03-lose-stora-2013WP-NS-0.out
CHNL# 146: [VOLT199280 [TUSKET A138.00]]
CHNL# 145: [VOLT199193 [LH-WAS 138.00]]
CHNL# 144: [VOLT199165 [TUFTCOVE138.00]]
CHNL# 143: [VOLT199135 [SPRNGHILL138.00]]
CHNL# 142: [VOLT199090 [SON-TREN138.00]]
CHNL# 141: [VOLT199051 [HASTINGS138.00]]
1.2000
0.70000
0.0
1.0000
2.0000
3.0000
4.0000
5.0000
6.0000
7.0000
8.0000
9.0000
10.000
TIME (SECONDS)
THU, JAN 29 2009 15:51
138KV BUS VOLTS

2013 WINTER PEAK STORA MIN
NS-NB=0; NB-NE=500; CBX=732; ONI=961 ONS=851
LOSE ALL LOAD AT STRA
NO FAULT
FILE: e03-lose-stora-2013WP-NS-0.out
CHNL# 140: [VOLT199240 [BWATER A230.00]]
CHNL# 139: [VOLT199200 [BRUSHY 230.00]]
CHNL# 138: [VOLT199130 [ONSLOW 230.00]]
CHNL# 137: [VOLT199050 [HASTINGS230.00]]
CHNL# 136: [VOLT199044 [PT.ACONI230.00]]
CHNL# 135: [VOLT199000 [LINGAN 230.00]]
1.2000
0.70000
0.0
1.0000
2.0000
3.0000
4.0000
5.0000
6.0000
7.0000
8.0000
9.0000
10.000
TIME (SECONDS)
THU, JAN 29 2009 15:51
230KV BUS VOLTS

2013 WINTER PEAK STORA MIN
NS-NB=0; NB-NE=500; CBX=732; ONI=961 ONS=851
LOSE ALL LOAD AT STRA
NO FAULT
FILE: e03-lose-stora-2013WP-NS-0.out
CHNL# 217: [L6513NWV]
CHNL# 215: [L6503MWV]
CHNL# 197: [L8003MWV]
CHNL# 195: [L8004MWV]
CHNL# 193: [L8001MWV]
CHNL# 221: [L3001MWV]
250.00
-250.0
500.00
0.0
1000.0
-1000.
0.0
1.0000
2.0000
3.0000
4.0000
5.0000
6.0000
7.0000
8.0000
9.0000
10.000
TIME (SECONDS)
THU, JAN 29 2009 15:51
LINE FLOW MW

2013 WINTER PEAK STORA MIN
NS-NB=0; NB-NE=500; CBX=732; ONI=961 ONS=851
LOSE ALL LOAD AT STRA
NO FAULT
FILE: e03-lose-stora-2013WP-NS-0.out
CHNL# 154: [IR141-DIGBYH69.0 VOLTS]
CHNL# 153: [IR137-STATIG25.0 VOLTS]
CHNL# 152: [IR114-GLENDH138.0 VOLTS]
CHNL# 151: [IR84-DALHOHV230.0 VOLTS]
CHNL# 150: [IR82-NUTBHV69.0 VOLTS]
CHNL# 149: [IR45-AMHERTP138.0 VOLTS]
1.2000
0.70000
0.0
1.0000
2.0000
3.0000
4.0000
5.0000
6.0000
7.0000
8.0000
9.0000
10.000
TIME (SECONDS)
THU, JAN 29 2009 15:51
WIND BUS VOLTS

2013 WINTER PEAK STORA MIN
NS-NB=0; NB-NE=500; CBX=732; ONI=961 ONS=851
3PH FAULT ON 138KV BUS B1 AT 79N HOPEWELL
SPS TRIPS LINGAN UNIT
FILE: a101s-b1_3ph_79n_nrect-2013WP-NS-0.out
CHNL#S 20.4: [ANGL199169 [TUFTCV3 14.400] [3]] [ANGL156661 [DARL G1 22.000] [1
CHNL#S 17.4: [ANGL199086 [TRENTON613.800] [6]] [ANGL156661 [DARL G1 22.000] [1
CHNL#S 16.4: [ANGL199085 [TRENTN5 13.800] [5]] [ANGL156661 [DARL G1 22.000] [1
CHNL#S 15.4: [ANGL199061 [TMP1 STO13.800] [1]] [ANGL156661 [DARL G1 22.000] [1
CHNL#S 13.4: [ANGL199043 [ACONIG1 20.000] [1]] [ANGL156661 [DARL G1 22.000] [1
CHNL#S 11.4: [ANGL199001 [LINGAN1 14.400] [1]] [ANGL156661 [DARL G1 22.000] [1
100.00
-100.0
0.0
1.0000
2.0000
3.0000
4.0000
5.0000
6.0000
7.0000
8.0000
9.0000
10.000
TIME (SECONDS)
THU, JAN 29 2009 15:51
NS ANGLE

2013 WINTER PEAK STORA MIN
NS-NB=0; NB-NE=500; CBX=732; ONI=961 ONS=851
3PH FAULT ON 138KV BUS B1 AT 79N HOPEWELL
SPS TRIPS LINGAN UNIT
FILE: a101s-b1_3ph_79n_nrect-2013WP-NS-0.out
CHNL#S 10.4: [ANGL190472 [BLLDNG2 19.000] [1]] [ANGL156661 [DARL G1 22.000] [1
CHNL#S 6.4: [ANGL190456 [LEPRG1 26.000] [1]] [ANGL156661 [DARL G1 22.000] [1
CHNL#S 5.4: [ANGL190450 [MACTG1 13.800] [1]] [ANGL156661 [DARL G1 22.000] [1
CHNL#S 3.4: [ANGL126652 [RAV 3 22.000] [1]] [ANGL156661 [DARL G1 22.000] [1
CHNL#S 2.4: [ANGL101063 [MYST G7 22.000] [1]] [ANGL156661 [DARL G1 22.000] [1
CHNL#S 7.4: [ANGL190457 [C.CVG1 19.000] [1]] [ANGL156661 [DARL G1 22.000] [1
100.00
-100.0
0.0
1.0000
2.0000
3.0000
4.0000
5.0000
6.0000
7.0000
8.0000
9.0000
10.000
TIME (SECONDS)
THU, JAN 29 2009 15:51
"NE,NY,NB ANGLE"

2013 WINTER PEAK STORA MIN
NS-NB=0; NB-NE=500; CBX=732; ONI=961 ONS=851
3PH FAULT ON 138KV BUS B1 AT 79N HOPEWELL
SPS TRIPS LINGAN UNIT
FILE: a101s-b1_3ph_79n_nrect-2013WP-NS-0.out
CHNL# 59: [POWR199169 [TUFTCV3 14.400] [3]]
CHNL# 56: [POWR199086 [TRENTON613.800] [6]]
CHNL# 55: [POWR199085 [TRENTN5 13.800] [5]]
CHNL# 54: [POWR199061 [TMP1 STO13.800] [1]]
CHNL# 52: [POWR199043 [ACONIG1 20.000] [1]]
CHNL# 50: [POWR199001 [LINGAN1 14.400] [1]]
2.5000
1.0000
-1.500
0.0
0.0
1.0000
2.0000
3.0000
4.0000
5.0000
6.0000
7.0000
8.0000
9.0000
10.000
TIME (SECONDS)
THU, JAN 29 2009 15:51
NS MW

2013 WINTER PEAK STORA MIN
NS-NB=0; NB-NE=500; CBX=732; ONI=961 ONS=851
3PH FAULT ON 138KV BUS B1 AT 79N HOPEWELL
SPS TRIPS LINGAN UNIT
FILE: a101s-b1_3ph_79n_nrect-2013WP-NS-0.out
CHNL# 49: [POWER190472 [BLLDNG2 19.000] [1]]
CHNL# 45: [POWER190456 [LEPRG1 26.000] [1]]
CHNL# 44: [POWER190450 [MACTG1 13.800] [1]]
CHNL# 42: [POWER126652 [RAV 3 22.000] [1]]
CHNL# 41: [POWER101063 [MYST G7 22.000] [1]]
CHNL# 46: [POWER190457 [C.CVG1 19.000] [1]]
7.0000
9.0000
5.0000
5.0000
6.5000
5.0000
4.0000
0.0
0.0
1.0000
0.0
1.0000
2.0000
3.0000
4.0000
5.0000
6.0000
7.0000
8.0000
9.0000
10.000
TIME (SECONDS)
THU, JAN 29 2009 15:51
"NE,NY,NB POWER"

2013 WINTER PEAK STORA MIN
NS-NB=0; NB-NE=500; CBX=732; ONI=961 ONS=851
3PH FAULT ON 138KV BUS B1 AT 79N HOPEWELL
SPS TRIPS LINGAN UNIT
FILE: a101s-b1_3ph_79n_nrect-2013WP-NS-0.out
CHNL# 119: [VARS IR141-DIGBY]
CHNL# 118: [VARS IR137-STATIA]
CHNL# 117: [VARS IR114-GLENDHU]
CHNL# 116: [VARS IR84-DALHOUSIE]
CHNL# 115: [VARS IR82_NUTTBY]
CHNL# 114: [VARS IR45_AMHERST]
0.50000
-0.5000
0.0
1.0000
2.0000
3.0000
4.0000
5.0000
6.0000
7.0000
8.0000
9.0000
10.000
TIME (SECONDS)
THU, JAN 29 2009 15:51
NS WIND MV

2013 WINTER PEAK STORA MIN
NS-NB=0; NB-NE=500; CBX=732; ONI=961 ONS=851
3PH FAULT ON 138KV BUS B1 AT 79N HOPEWELL
SPS TRIPS LINGAN UNIT
FILE: a101s-b1_3ph_79n_nrect-2013WP-NS-0.out
CHNL# 79: [POWER IR141-DIGBY]
CHNL# 78: [POWER IR137-STATIA]
CHNL# 77: [POWER IR114-GLENDHU]
CHNL# 76: [POWER IR84-DALHOUSIE]
CHNL# 75: [POWER IR82_NUTTBY]
CHNL# 74: [POWER IR45_AMHERST]
1.0000
0.0
0.0
1.0000
2.0000
3.0000
4.0000
5.0000
6.0000
7.0000
8.0000
9.0000
10.000
TIME (SECONDS)
THU, JAN 29 2009 15:51
NS WIND MW

2013 WINTER PEAK STORA MIN
NS-NB=0; NB-NE=500; CBX=732; ONI=961 ONS=851
3PH FAULT ON 138KV BUS B1 AT 79N HOPEWELL
SPS TRIPS LINGAN UNIT
FILE: a101s-b1_3ph_79n_nrect-2013WP-NS-0.out
CHNL# 133: [VOLT199125 [ONSLOW 345.00]]
CHNL# 132: [VOLT199120 [HOPEWELL 345.00]]
CHNL# 131: [VOLT199045 [WOODBINE345.00]]
CHNL# 130: [VOLT190320 [SALBRY 345.00]]
CHNL# 128: [VOLT190004 [KESWICK 345.00]]
CHNL# 127: [VOLT 70002 [ORRINGTN345.00]]
1.1000
0.90000
0.0
1.0000
2.0000
3.0000
4.0000
5.0000
6.0000
7.0000
8.0000
9.0000
10.000
TIME (SECONDS)
THU, JAN 29 2009 15:51
"345KV VOLTAGE"

2013 WINTER PEAK STORA MIN
NS-NB=0; NB-NE=500; CBX=732; ONI=961 ONS=851
3PH FAULT ON 138KV BUS B1 AT 79N HOPEWELL
SPS TRIPS LINGAN UNIT
FILE: a101s-b1_3ph_79n_nrect-2013WP-NS-0.out
CHNL# 125: 60*(1+[FREQ199125 [ONSLOW 345.00]])
CHNL# 124: 60*(1+[FREQ199120 [HOPEWELL 345.00]])
CHNL# 123: 60*(1+[FREQ199045 [WOODBINE345.00]])
CHNL# 122: 60*(1+[FREQ190320 [SALBRY 345.00]])
CHNL# 121: 60*(1+[FREQ190197 [C.COVE 345.00]])
CHNL# 120: 60*(1+[FREQ 70002 [ORRINGTN345.00]])
60.500
59.500
0.0
1.0000
2.0000
3.0000
4.0000
5.0000
6.0000
7.0000
8.0000
9.0000
10.000
TIME (SECONDS)
THU, JAN 29 2009 15:51
FREQUENCY HZ

2013 WINTER PEAK STORA MIN
NS-NB=0; NB-NE=500; CBX=732; ONI=961 ONS=851
3PH FAULT ON 138KV BUS B1 AT 79N HOPEWELL
SPS TRIPS LINGAN UNIT
FILE: a101s-b1_3ph_79n_nrect-2013WP-NS-0.out
CHNL# 146: [VOLT199280 [TUSKET A138.00]]
CHNL# 145: [VOLT199193 [HHWAS 138.00]]
CHNL# 144: [VOLT199165 [TUFTCOVE138.00]]
CHNL# 143: [VOLT199135 [SPRNGHILL138.00]]
CHNL# 142: [VOLT199090 [SON-TREN138.00]]
CHNL# 141: [VOLT199051 [HASTINGS138.00]]
1.2000
0.70000
0.0
1.0000
2.0000
3.0000
4.0000
5.0000
6.0000
7.0000
8.0000
9.0000
10.000
TIME (SECONDS)
THU, JAN 29 2009 15:51
138KV BUS VOLTS

2013 WINTER PEAK STORA MIN
NS-NB=0; NB-NE=500; CBX=732; ONI=961 ONS=851
3PH FAULT ON 138KV BUS B1 AT 79N HOPEWELL
SPS TRIPS LINGAN UNIT
FILE: a101s-b1_3ph_79n_nrect-2013WP-NS-0.out
CHNL# 140: [VOLT199240 [BWATER A230.00]]
CHNL# 139: [VOLT199200 [BRUSHY 230.00]]
CHNL# 138: [VOLT199130 [ONSLOW 230.00]]
CHNL# 137: [VOLT199050 [HASTINGS230.00]]
CHNL# 136: [VOLT199044 [PT.ACONI230.00]]
CHNL# 135: [VOLT199000 [LINGAN 230.00]]
1.2000
0.70000
0.0
1.0000
2.0000
3.0000
4.0000
5.0000
6.0000
7.0000
8.0000
9.0000
10.000
TIME (SECONDS)
THU, JAN 29 2009 15:51
230KV BUS VOLTS

2013 WINTER PEAK STORA MIN
NS-NB=0; NB-NE=500; CBX=732; ONI=961 ONS=851
3PH FAULT ON 138KV BUS B1 AT 79N HOPEWELL
SPS TRIPS LINGAN UNIT
FILE: a101s-b1_3ph_79n_nrect-2013WP-NS-0.out
CHNL# 217: [L6533NMW]
CHNL# 215: [L6503MW]
CHNL# 197: [L8003MW]
CHNL# 195: [L8004MW]
CHNL# 193: [L8001MW]
CHNL# 221: [L3001MW]
250.00
500.00
1000.0
0.0
-250.0
-1000.
0.0
1.0000
2.0000
3.0000
4.0000
5.0000
6.0000
7.0000
8.0000
9.0000
10.000
TIME (SECONDS)
THU, JAN 29 2009 15:51
LINE FLOW MW

2013 WINTER PEAK STORA MIN
NS-NB=0; NB-NE=500; CBX=732; ONI=961 ONS=851
3PH FAULT ON 138KV BUS B1 AT 79N HOPEWELL
SPS TRIPS LINGAN UNIT
FILE: a101s-b1_3ph_79n_nrect-2013WP-NS-0.out
CHNL# 154: [IR141-DIGBYH69.0 VOLTS]
CHNL# 153: [IR137-STATIG25.0 VOLTS]
CHNL# 152: [IR114-GLENDH138.0 VOLTS]
CHNL# 151: [IR84-DALHOHV230.0 VOLTS]
CHNL# 150: [IR82_NUTBHV69.0 VOLTS]
CHNL# 149: [IR45_AMHERTP138.0 VOLTS]
1.2000
0.70000
0.0
1.0000
2.0000
3.0000
4.0000
5.0000
6.0000
7.0000
8.0000
9.0000
10.000
TIME (SECONDS)
THU, JAN 29 2009 15:51
WIND BUS VOLTS

2013 WINTER PEAK STORA MIN
NS-NB=0; NB-NE=500; CBX=732; ONI=961 ONS=851
3 PHASE FAULT ON ONSLOW 138KV BUS B61
TRIPS T72, L6001, T4, CAPACITOR BANK
FILE: a102-b61_3ph_1n_mrecl-2013WP-NS-0.out
CHNL#S 20,4: [ANGL199169 [TUFTCV3 14.400] [3 1]] [ANGL156661 [DARL G1 22.000] [1
CHNL#S 17,4: [ANGL199086 [TRENTON613.800] [6 1]] [ANGL156661 [DARL G1 22.000] [1
CHNL#S 16,4: [ANGL199085 [TRENTN5 13.800] [5 1]] [ANGL156661 [DARL G1 22.000] [1
CHNL#S 15,4: [ANGL199061 [TMP1 STO13.800] [1 1]] [ANGL156661 [DARL G1 22.000] [1
CHNL#S 13,4: [ANGL199043 [ACONIG1 20.000] [1 1]] [ANGL156661 [DARL G1 22.000] [1
CHNL#S 11,4: [ANGL199001 [LINGAN1 14.400] [1 1]] [ANGL156661 [DARL G1 22.000] [1
100.00
-100.0
0.0
1.0000
2.0000
3.0000
4.0000
5.0000
6.0000
7.0000
8.0000
9.0000
10.000
TIME (SECONDS)
THU, JAN 29 2009 15:51
NS ANGLE

2013 WINTER PEAK STORA MIN
NS-NB=0; NB-NE=500; CBX=732; ONI=961 ONS=851
3 PHASE FAULT ON ONSLOW 138KV BUS B61
TRIPS T72, L6001, T4, CAPACITOR BANK
FILE: a102-b61_3ph_1n_mrecl-2013WP-NS-0.out
CHNL#S 10,4: [ANGL190472 [BLLDNG2 19.000] [1 1]] [ANGL156661 [DARL G1 22.000] [1
CHNL#S 6,4: [ANGL190456 [LEPRG1 26.000] [1 1]] [ANGL156661 [DARL G1 22.000] [1
CHNL#S 5,4: [ANGL190450 [MACTG1 13.800] [1 1]] [ANGL156661 [DARL G1 22.000] [1
CHNL#S 3,4: [ANGL126652 [RAV 3 22.000] [1 1]] [ANGL156661 [DARL G1 22.000] [1
CHNL#S 2,4: [ANGL101063 [MYST G7 22.000] [1 1]] [ANGL156661 [DARL G1 22.000] [1
CHNL#S 7,4: [ANGL190457 [C.CVG1 19.000] [1 1]] [ANGL156661 [DARL G1 22.000] [1
100.00
-100.0
0.0
1.0000
2.0000
3.0000
4.0000
5.0000
6.0000
7.0000
8.0000
9.0000
10.000
TIME (SECONDS)
THU, JAN 29 2009 15:51
"NE,NY,NB ANGLE"

2013 WINTER PEAK STORA MIN
NS-NB=0; NB-NE=500; CBX=732; ONI=961 ONS=851
3 PHASE FAULT ON ONSLOW 138KV BUS B61
TRIPS T72, L6001, T4, CAPACITOR BANK
FILE: a102-b61_3ph_1n_mrecl-2013WP-NS-0.out
CHNL# 59: [POWR199169 [TUFTCV3 14.400] [3 1]]
CHNL# 56: [POWR199086 [TRENTON613.800] [6 1]]
CHNL# 55: [POWR199085 [TRENTN5 13.800] [5 1]]
CHNL# 54: [POWR199061 [TMP1 STO13.800] [1 1]]
CHNL# 52: [POWR199043 [ACONIG1 20.000] [1 1]]
CHNL# 50: [POWR199001 [LINGAN1 14.400] [1 1]]
2.5000
1.0000
-1.500
0.0
1.0000
2.0000
3.0000
4.0000
5.0000
6.0000
7.0000
8.0000
9.0000
10.000
TIME (SECONDS)
THU, JAN 29 2009 15:51
NS MW

2013 WINTER PEAK STORA MIN
NS-NB=0; NB-NE=500; CBX=732; ONI=961 ONS=851
3 PHASE FAULT ON ONSLOW 138KV BUS B61
TRIPS T72, L6001, T4, CAPACITOR BANK
FILE: a102-b61_3ph_1n_mrecl-2013WP-NS-0.out
CHNL# 49: [POWER190472 [BLLDNG2 19.000] [1]]
CHNL# 45: [POWER190456 [LEPRG1 26.000] [1]]
CHNL# 44: [POWER190450 [MACTG1 13.800] [1]]
CHNL# 42: [POWER126652 [RAV 3 22.000] [1]]
CHNL# 41: [POWER101063 [MYST G7 22.000] [1]]
CHNL# 46: [POWER190457 [C.CVG1 19.000] [1]]
7.0000
9.0000
5.0000
5.0000
6.5000
5.0000
2.0000
4.0000
0.0
0.0
1.0000
0.0
1.0000
2.0000
3.0000
4.0000
5.0000
6.0000
7.0000
8.0000
9.0000
10.000
TIME (SECONDS)
THU, JAN 29 2009 15:51
"NE,NY,NB POWER"

2013 WINTER PEAK STORA MIN
NS-NB=0; NB-NE=500; CBX=732; ONI=961 ONS=851
3 PHASE FAULT ON ONSLOW 138KV BUS B61
TRIPS T72, L6001, T4, CAPACITOR BANK
FILE: a102-b61_3ph_1n_mrecl-2013WP-NS-0.out
CHNL# 119: [VARS IR141-DIGBY]
CHNL# 118: [VARS IR137-STATIA]
CHNL# 117: [VARS IR114-GLENDHU]
CHNL# 116: [VARS IR84-DALHOUSIE]
CHNL# 115: [VARS IR82_NUTTBY]
CHNL# 114: [VARS IR45_AMHERST]
0.50000
-0.5000
0.0
1.0000
2.0000
3.0000
4.0000
5.0000
6.0000
7.0000
8.0000
9.0000
10.000
TIME (SECONDS)
THU, JAN 29 2009 15:51
NS WIND MV

2013 WINTER PEAK STORA MIN
NS-NB=0; NB-NE=500; CBX=732; ONI=961 ONS=851
3 PHASE FAULT ON ONSLOW 138KV BUS B61
TRIPS T72, L6001, T4, CAPACITOR BANK
FILE: a102-b61_3ph_1n_mrecl-2013WP-NS-0.out
CHNL# 79: [POWER IR141-DIGBY]
CHNL# 78: [POWER IR137-STATIA]
CHNL# 77: [POWER IR114-GLENDHU]
CHNL# 76: [POWER IR84-DALHOUSIE]
CHNL# 75: [POWER IR82_NUTTBY]
CHNL# 74: [POWER IR45_AMHERST]
1.0000
0.0
1.0000
2.0000
3.0000
4.0000
5.0000
6.0000
7.0000
8.0000
9.0000
10.000
TIME (SECONDS)
THU, JAN 29 2009 15:51
NS WIND MW

2013 WINTER PEAK STORA MIN
NS-NB=0; NB-NE=500; CBX=732; ONI=961 ONS=851
3 PHASE FAULT ON ONSLOW 138KV BUS B61
TRIPS T72, L6001, T4, CAPACITOR BANK
FILE: a102-b61_3ph_1n_mrecl-2013WP-NS-0.out
CHNL# 133: [VOLT199125 IONSLOW 345.00]
CHNL# 132: [VOLT199120 IHOPEWELL345.00]
CHNL# 131: [VOLT199045 IWOODBINE345.00]
CHNL# 130: [VOLT190320 ISALBRY 345.00]
CHNL# 128: [VOLT190004 IKESWICK 345.00]
CHNL# 127: [VOLT 70002 IORRINGTN345.00]
1.1000
0.90000
0.0
1.0000
2.0000
3.0000
4.0000
5.0000
6.0000
7.0000
8.0000
9.0000
10.000
TIME (SECONDS)
THU, JAN 29 2009 15:51
"345KV VOLTAGE"

2013 WINTER PEAK STORA MIN
NS-NB=0; NB-NE=500; CBX=732; ONI=961 ONS=851
3 PHASE FAULT ON ONSLOW 138KV BUS B61
TRIPS T72, L6001, T4, CAPACITOR BANK
FILE: a102-b61_3ph_1n_mrecl-2013WP-NS-0.out
CHNL# 125: 60*(1+[FREQ199125 IONSLOW 345.00])
CHNL# 124: 60*(1+[FREQ199120 IHOPEWELL345.00])
CHNL# 123: 60*(1+[FREQ199045 IWOODBINE345.00])
CHNL# 122: 60*(1+[FREQ190320 ISALBRY 345.00])
CHNL# 121: 60*(1+[FREQ190197 IC.COVE 345.00])
CHNL# 120: 60*(1+[FREQ 70002 IORRINGTN345.00])
60.500
59.500
0.0
1.0000
2.0000
3.0000
4.0000
5.0000
6.0000
7.0000
8.0000
9.0000
10.000
TIME (SECONDS)
THU, JAN 29 2009 15:51
FREQUENCY HZ

2013 WINTER PEAK STORA MIN
NS-NB=0; NB-NE=500; CBX=732; ONI=961 ONS=851
3 PHASE FAULT ON ONSLOW 138KV BUS B61
TRIPS T72, L6001, T4, CAPACITOR BANK
FILE: a102-b61_3ph_1n_mrecl-2013WP-NS-0.out
CHNL# 146: [VOLT199280 [TUSKET A138.00]]
CHNL# 145: [VOLT199193 [HHWAS 138.00]]
CHNL# 144: [VOLT199165 [TUFTCOVE138.00]]
CHNL# 143: [VOLT199138: [SPRNGHILL138.00]]
CHNL# 142: [VOLT199090 [SON-TREN138.00]]
CHNL# 141: [VOLT199051 [HASTINGS138.00]]
1.2000
0.70000
0.0
1.0000
2.0000
3.0000
4.0000
5.0000
6.0000
7.0000
8.0000
9.0000
10.000
TIME (SECONDS)
THU, JAN 29 2009 15:51
138KV BUS VOLTS

2013 WINTER PEAK STORA MIN
NS-NB=0; NB-NE=500; CBX=732; ONI=961 ONS=851
3 PHASE FAULT ON ONSLOW 138KV BUS B61
TRIPS T72, L6001, T4, CAPACITOR BANK
FILE: a102-b61_3ph_1n_mrecl-2013WP-NS-0.out
CHNL# 140: [VOLT199240 [BWATER A230.00]]
CHNL# 139: [VOLT199200 [BRUSHY 230.00]]
CHNL# 138: [VOLT199130 [ONSLOW 230.00]]
CHNL# 137: [VOLT199050 [HASTINGS230.00]]
CHNL# 136: [VOLT199044 [PT.ACONI230.00]]
CHNL# 135: [VOLT199000 [LINGAN 230.00]]
1.2000
0.70000
0.0
1.0000
2.0000
3.0000
4.0000
5.0000
6.0000
7.0000
8.0000
9.0000
10.000
TIME (SECONDS)
THU, JAN 29 2009 15:51
230KV BUS VOLTS

2013 WINTER PEAK STORA MIN
NS-NB=0; NB-NE=500; CBX=732; ONI=961 ONS=851
3 PHASE FAULT ON ONSLOW 138KV BUS B61
TRIPS T72, L6001, T4, CAPACITOR BANK
FILE: a102-b61_3ph_1n_mrecl-2013WP-NS-0.out
CHNL# 217: [L6533NMW]
CHNL# 215: [L6503MW1]
CHNL# 197: [L8003MW]
CHNL# 195: [L8004MW1]
CHNL# 193: [L8001MW]
CHNL# 221: [L3001MW1]
250.00
-250.0
500.00
0.0
1000.0
-1000.
0.0
1.0000
2.0000
3.0000
4.0000
5.0000
6.0000
7.0000
8.0000
9.0000
10.000
TIME (SECONDS)
THU, JAN 29 2009 15:51
LINE FLOW MW

2013 WINTER PEAK STORA MIN
NS-NB=0; NB-NE=500; CBX=732; ONI=961 ONS=851
3 PHASE FAULT ON ONSLOW 138KV BUS B61
TRIPS T72, L6001, T4, CAPACITOR BANK
FILE: a102-b61_3ph_1n_mrecl-2013WP-NS-0.out
CHNL# 154: [IR141-DIGBYH69.0 VOLTS]
CHNL# 153: [IR137-STATIG25.0 VOLTS]
CHNL# 152: [IR114-GLENDH138.0 VOLTS]
CHNL# 151: [IR84-DALHOHV230.0 VOLTS]
CHNL# 150: [IR82_NUTBHV69.0 VOLTS]
CHNL# 149: [IR45_AMHERTP138.0 VOLTS]
1.2000
0.70000
0.0
1.0000
2.0000
3.0000
4.0000
5.0000
6.0000
7.0000
8.0000
9.0000
10.000
TIME (SECONDS)
THU, JAN 29 2009 15:51
WIND BUS VOLTS

2013 WINTER PEAK STORA MIN
NS-NB=0; NB-NE=500; CBX=732; ONI=961 ONS=851
3 PHASE FAULT ON B61 AT BRUSHY HILL 138KV
TRIPS 120H-T72
FILE: a104-120h-b61_3ph_nrect-2013WP-NS-0.out
CHNL# 20: [ANGL199169 [TUFTCV3 14.400] [3]] [ANGL156661 [DARL G1 22.000] [1
CHNL# 17: [ANGL199086 [TRENTON613.800] [6]] [ANGL156661 [DARL G1 22.000] [1
CHNL# 16: [ANGL199085 [TRENTN5 13.800] [5]] [ANGL156661 [DARL G1 22.000] [1
CHNL# 15: [ANGL199061 [TMP1 STO13.800] [1]] [ANGL156661 [DARL G1 22.000] [1
CHNL# 13: [ANGL199043 [ACONIG1 20.000] [1]] [ANGL156661 [DARL G1 22.000] [1
CHNL# 11: [ANGL199001 [LINGAN1 14.400] [1]] [ANGL156661 [DARL G1 22.000] [1
TIME (SECONDS)
THU, JAN 29 2009 15:51
NS ANGLE

2013 WINTER PEAK STORA MIN
NS-NB=0; NB-NE=500; CBX=732; ONI=961 ONS=851
3 PHASE FAULT ON B61 AT BRUSHY HILL 138KV
TRIPS 120H-T72
FILE: a104-120h-b61_3ph_nrect-2013WP-NS-0.out
CHNL# 10: [ANGL190472 [BLLDNG2 19.000] [1]] [ANGL156661 [DARL G1 22.000] [1
CHNL# 6: [ANGL190456 [LEPRG1 26.000] [1]] [ANGL156661 [DARL G1 22.000] [1
CHNL# 5: [ANGL190450 [MACTG1 13.800] [1]] [ANGL156661 [DARL G1 22.000] [1
CHNL# 3: [ANGL126652 [RAV 3 22.000] [1]] [ANGL156661 [DARL G1 22.000] [1
CHNL# 2: [ANGL101063 [MYST G7 22.000] [1]] [ANGL156661 [DARL G1 22.000] [1
CHNL# 7: [ANGL190457 [C.CVG1 19.000] [1]] [ANGL156661 [DARL G1 22.000] [1
TIME (SECONDS)
THU, JAN 29 2009 15:51
"NE,NY,NB ANGLE"

2013 WINTER PEAK STORA MIN
NS-NB=0; NB-NE=500; CBX=732; ONI=961 ONS=851
3 PHASE FAULT ON B61 AT BRUSHY HILL 138KV
TRIPS 120H-T72
FILE: a104-120h-b61_3ph_nrect-2013WP-NS-0.out
CHNL# 59: [POWER199169 [TUFTCV3 14.400] [3]]
CHNL# 56: [POWER199086 [TRENTON613.800] [6]]
CHNL# 55: [POWER199085 [TRENTN5 13.800] [5]]
CHNL# 54: [POWER199061 [TMP1 STO13.800] [1]]
CHNL# 52: [POWER199043 [ACONIG1 20.000] [1]]
CHNL# 50: [POWER199001 [LINGAN1 14.400] [1]]
TIME (SECONDS)
THU, JAN 29 2009 15:51
NS MW

2013 WINTER PEAK STORA MIN
NS-NB=0; NB-NE=500; CBX=732; ONI=961 ONS=851
3 PHASE FAULT ON B61 AT BRUSHY HILL 138KV
TRIPS 120H-T72
FILE: a104-120h-b61_3ph_nrect-2013WP-NS-0.out
CHNL# 49: [POWER190472 [BLLDNG2 19.000] [1]]
CHNL# 45: [POWER190456 [LEPRG1 26.000] [1]]
CHNL# 44: [POWER190450 [MACTG1 13.800] [1]]
CHNL# 42: [POWER126652 [RAV 3 22.000] [1]]
CHNL# 41: [POWER101063 [MYST G7 22.000] [1]]
CHNL# 46: [POWER190457 [C.CVG1 19.000] [1]]
TIME (SECONDS)
THU, JAN 29 2009 15:51
"NE,NY,NB POWER"

2013 WINTER PEAK STORA MIN
NS-NB=0; NB-NE=500; CBX=732; ONI=961 ONS=851
3 PHASE FAULT ON B61 AT BRUSHY HILL 138KV
TRIPS 120H-T72
FILE: a104-120h-b61_3ph_nrec-2013WP-NS-0.out
CHNL# 119: [VARS IR141-DIGBY]
CHNL# 118: [VARS IR137-STATIA]
CHNL# 117: [VARS IR114-GLENDHU]
CHNL# 116: [VARS IR84-DALHOUSIE]
CHNL# 115: [VARS IR82_NUTTBY]
CHNL# 114: [VARS IR45_AMHERST]
0.50000
-0.5000
0.0
1.0000
2.0000
3.0000
4.0000
5.0000
6.0000
7.0000
8.0000
9.0000
10.000
TIME (SECONDS)
THU, JAN 29 2009 15:51
NS WIND MV

2013 WINTER PEAK STORA MIN
NS-NB=0; NB-NE=500; CBX=732; ONI=961 ONS=851
3 PHASE FAULT ON B61 AT BRUSHY HILL 138KV
TRIPS 120H-T72
FILE: a104-120h-b61_3ph_nrec-2013WP-NS-0.out
CHNL# 79: [POWER IR141-DIGBY]
CHNL# 78: [POWER IR137-STATIA]
CHNL# 77: [POWER IR114-GLENDHU]
CHNL# 76: [POWER IR84-DALHOUSIE]
CHNL# 75: [POWER IR82_NUTTBY]
CHNL# 74: [POWER IR45_AMHERST]
1.0000
0.0
1.0000
2.0000
3.0000
4.0000
5.0000
6.0000
7.0000
8.0000
9.0000
10.000
TIME (SECONDS)
THU, JAN 29 2009 15:51
NS WIND MW

2013 WINTER PEAK STORA MIN
NS-NB=0; NB-NE=500; CBX=732; ONI=961 ONS=851
3 PHASE FAULT ON B61 AT BRUSHY HILL 138KV
TRIPS 120H-T72
FILE: a104-120h-b61_3ph_nrec-2013WP-NS-0.out
CHNL# 133: [VOLT199125 [ONSLOW 345.00]]
CHNL# 132: [VOLT199120 [HOPEWELL 345.00]]
CHNL# 131: [VOLT199045 [WOODBINE345.00]]
CHNL# 130: [VOLT190320 [SALBRY 345.00]]
CHNL# 128: [VOLT190004 [KESWICK 345.00]]
CHNL# 127: [VOLT 70002 [ORRINGTN345.00]]
0.90000
1.1000
0.0
1.0000
2.0000
3.0000
4.0000
5.0000
6.0000
7.0000
8.0000
9.0000
10.000
TIME (SECONDS)
THU, JAN 29 2009 15:51
"345KV VOLTAGE"

2013 WINTER PEAK STORA MIN
NS-NB=0; NB-NE=500; CBX=732; ONI=961 ONS=851
3 PHASE FAULT ON B61 AT BRUSHY HILL 138KV
TRIPS 120H-T72
FILE: a104-120h-b61_3ph_nrec-2013WP-NS-0.out
CHNL# 125: 60*(1+[FREQ199125 [ONSLOW 345.00]])
CHNL# 124: 60*(1+[FREQ199120 [HOPEWELL 345.00]])
CHNL# 123: 60*(1+[FREQ199045 [WOODBINE345.00]])
CHNL# 122: 60*(1+[FREQ190320 [SALBRY 345.00]])
CHNL# 121: 60*(1+[FREQ190197 [C.COVE 345.00]])
CHNL# 120: 60*(1+[FREQ 70002 [ORRINGTN345.00]])
60.500
59.500
0.0
1.0000
2.0000
3.0000
4.0000
5.0000
6.0000
7.0000
8.0000
9.0000
10.000
TIME (SECONDS)
THU, JAN 29 2009 15:51
FREQUENCY HZ

2013 WINTER PEAK STORA MIN
NS-NB=0; NB-NE=500; CBX=732; ONI=961 ONS=851
3 PHASE FAULT ON B61 AT BRUSHY HILL 138KV
TRIPS 120H-T72
FILE: a104-120h-b61_3ph_nrecl-2013WP-NS-0.out
CHNL# 146: [VOLT199280 [TUSKET A138.00]]
CHNL# 145: [VOLT199193 [1H-WAS 138.00]]
CHNL# 144: [VOLT199165 [TUFTCOVE138.00]]
CHNL# 143: [VOLT199138: [SPRNGHILL138.00]]
CHNL# 142: [VOLT199090 [50N-TREN138.00]]
CHNL# 141: [VOLT199051 [HASTINGS138.00]]
1.2000
0.70000
0.0
1.0000
2.0000
3.0000
4.0000
5.0000
6.0000
7.0000
8.0000
9.0000
10.000
TIME (SECONDS)
THU, JAN 29 2009 15:51
138KV BUS VOLTS

2013 WINTER PEAK STORA MIN
NS-NB=0; NB-NE=500; CBX=732; ONI=961 ONS=851
3 PHASE FAULT ON B61 AT BRUSHY HILL 138KV
TRIPS 120H-T72
FILE: a104-120h-b61_3ph_nrecl-2013WP-NS-0.out
CHNL# 140: [VOLT199240 [BWATER A230.00]]
CHNL# 139: [VOLT199200 [BRUSHY 230.00]]
CHNL# 138: [VOLT199130 [ONSLOW 230.00]]
CHNL# 137: [VOLT199050 [HASTINGS230.00]]
CHNL# 136: [VOLT199044 [PT.ACONI230.00]]
CHNL# 135: [VOLT199000 [LINGAN 230.00]]
1.2000
0.70000
0.0
1.0000
2.0000
3.0000
4.0000
5.0000
6.0000
7.0000
8.0000
9.0000
10.000
TIME (SECONDS)
THU, JAN 29 2009 15:51
230KV BUS VOLTS

2013 WINTER PEAK STORA MIN
NS-NB=0; NB-NE=500; CBX=732; ONI=961 ONS=851
3 PHASE FAULT ON B61 AT BRUSHY HILL 138KV
TRIPS 120H-T72
FILE: a104-120h-b61_3ph_nrecl-2013WP-NS-0.out
CHNL# 217: [L6533MW]
CHNL# 215: [L6503MW]
CHNL# 197: [L8003MW]
CHNL# 195: [L8004MW]
CHNL# 193: [L8001MW]
CHNL# 221: [L3001MW]
250.00
500.00
1000.0
0.0
-250.0
-1000.
TIME (SECONDS)
THU, JAN 29 2009 15:51
LINE FLOW MW

2013 WINTER PEAK STORA MIN
NS-NB=0; NB-NE=500; CBX=732; ONI=961 ONS=851
3 PHASE FAULT ON B61 AT BRUSHY HILL 138KV
TRIPS 120H-T72
FILE: a104-120h-b61_3ph_nrecl-2013WP-NS-0.out
CHNL# 154: [IR141-DIGBYH69.0 VOLTS]
CHNL# 153: [IR137-STATIG25.0 VOLTS]
CHNL# 152: [IR114-GLENDH138.0 VOLTS]
CHNL# 151: [IR84-DALHOHV230.0 VOLTS]
CHNL# 150: [IR82_NUTBHV69.0 VOLTS]
CHNL# 149: [IR45_AMHERTP138.0 VOLTS]
1.2000
0.70000
0.0
1.0000
2.0000
3.0000
4.0000
5.0000
6.0000
7.0000
8.0000
9.0000
10.000
TIME (SECONDS)
THU, JAN 29 2009 15:51
WIND BUS VOLTS

2013 WINTER PEAK STORA MIN
NS-NB=0; NB-NE=500; CBX=732; ONI=961 ONS=851
3 PHASE FAULT ON L6012 AT 120H BRUSHY
RECLOSES IN 5 SECONDS
FILE: a105-L6012_3ph_recl-2013WP-NS-0.out
CHNL#S 20.4: [ANGL199169 [TUFTCV3 14.400] [3]] [ANGL156661 [DARL G1 22.000] [1]
CHNL#S 17.4: [ANGL199086 [TRENTON613.800] [6]] [ANGL156661 [DARL G1 22.000] [1]
CHNL#S 16.4: [ANGL199085 [TRENTN5 13.800] [5]] [ANGL156661 [DARL G1 22.000] [1]
CHNL#S 15.4: [ANGL199061 [TMP1 STO13.800] [1]] [ANGL156661 [DARL G1 22.000] [1]
CHNL#S 13.4: [ANGL199043 [ACONIG1 20.000] [1]] [ANGL156661 [DARL G1 22.000] [1]
CHNL#S 11.4: [ANGL199001 [LINGAN1 14.400] [1]] [ANGL156661 [DARL G1 22.000] [1]
100.00
-100.0
0.0
1.0000
2.0000
3.0000
4.0000
5.0000
6.0000
7.0000
8.0000
9.0000
10.000
TIME (SECONDS)
THU, JAN 29 2009 15:51
NS ANGLE

2013 WINTER PEAK STORA MIN
NS-NB=0; NB-NE=500; CBX=732; ONI=961 ONS=851
3 PHASE FAULT ON L6012 AT 120H BRUSHY
RECLOSES IN 5 SECONDS
FILE: a105-L6012_3ph_recl-2013WP-NS-0.out
CHNL#S 10.4: [ANGL190472 [BLLDNG2 19.000] [1]] [ANGL156661 [DARL G1 22.000] [1]
CHNL#S 6.4: [ANGL190456 [LEPRG1 26.000] [1]] [ANGL156661 [DARL G1 22.000] [1]
CHNL#S 5.4: [ANGL190450 [MACTG1 13.800] [1]] [ANGL156661 [DARL G1 22.000] [1]
CHNL#S 3.4: [ANGL126652 [RAV 3 22.000] [1]] [ANGL156661 [DARL G1 22.000] [1]
CHNL#S 2.4: [ANGL101063 [MYST G7 22.000] [1]] [ANGL156661 [DARL G1 22.000] [1]
CHNL#S 7.4: [ANGL190457 [C.CVG1 19.000] [1]] [ANGL156661 [DARL G1 22.000] [1]
100.00
-100.0
0.0
1.0000
2.0000
3.0000
4.0000
5.0000
6.0000
7.0000
8.0000
9.0000
10.000
TIME (SECONDS)
THU, JAN 29 2009 15:51
"NE,NY,NB ANGLE"

2013 WINTER PEAK STORA MIN
NS-NB=0; NB-NE=500; CBX=732; ONI=961 ONS=851
3 PHASE FAULT ON L6012 AT 120H BRUSHY
RECLOSES IN 5 SECONDS
FILE: a105-L6012_3ph_recl-2013WP-NS-0.out
CHNL# 59: [POWR199169 [TUFTCV3 14.400] [3]]
CHNL# 56: [POWR199086 [TRENTON613.800] [6]]
CHNL# 55: [POWR199085 [TRENTN5 13.800] [5]]
CHNL# 54: [POWR199061 [TMP1 STO13.800] [1]]
CHNL# 52: [POWR199043 [ACONIG1 20.000] [1]]
CHNL# 50: [POWR199001 [LINGAN1 14.400] [1]]
2.5000
1.0000
-1.500
0.0
1.0000
2.0000
3.0000
4.0000
5.0000
6.0000
7.0000
8.0000
9.0000
10.000
TIME (SECONDS)
THU, JAN 29 2009 15:51
NS MW

2013 WINTER PEAK STORA MIN
NS-NB=0; NB-NE=500; CBX=732; ONI=961 ONS=851
3 PHASE FAULT ON L6012 AT 120H BRUSHY
RECLOSES IN 5 SECONDS
FILE: a105-L6012_3ph_recl-2013WP-NS-0.out
CHNL# 49: [POWER190472 [BLLDNG2 19.000] [1]]
CHNL# 45: [POWER190456 [LEPRG1 26.000] [1]]
CHNL# 44: [POWER190450 [MACTG1 13.800] [1]]
CHNL# 42: [POWER126652 [RAV 3 22.000] [1]]
CHNL# 41: [POWER101063 [MYST G7 22.000] [1]]
CHNL# 46: [POWER190457 [C.CVG1 19.000] [1]]
7.0000
9.0000
5.0000
5.0000
6.5000
5.0000
2.0000
4.0000
0.0
0.0
1.0000
0.0
1.0000
2.0000
3.0000
4.0000
5.0000
6.0000
7.0000
8.0000
9.0000
10.000
TIME (SECONDS)
THU, JAN 29 2009 15:51
"NE,NY,NB POWER"

2013 WINTER PEAK STORA MIN
NS-NB=0; NB-NE=500; CBX=732; ONI=961 ONS=851
3 PHASE FAULT ON L6012 AT 120H BRUSHY
RECLOSES IN 5 SECONDS
FILE: a105-L6012_3ph_recl-2013WP-NS-0.out
CHNL# 119: [VARS IR141-DIGBY]
CHNL# 118: [VARS IR137-STATIA]
CHNL# 117: [VARS IR114-GLENDHU]
CHNL# 116: [VARS IR84-DALHOUSIE]
CHNL# 115: [VARS IR82_NUTTBY]
CHNL# 114: [VARS IR45_AMHERST]
TIME (SECONDS)
THU, JAN 29 2009 15:51
NS WIND MV

2013 WINTER PEAK STORA MIN
NS-NB=0; NB-NE=500; CBX=732; ONI=961 ONS=851
3 PHASE FAULT ON L6012 AT 120H BRUSHY
RECLOSES IN 5 SECONDS
FILE: a105-L6012_3ph_recl-2013WP-NS-0.out
CHNL# 79: [POWER IR141-DIGBY]
CHNL# 78: [POWER IR137-STATIA]
CHNL# 77: [POWER IR114-GLENDHU]
CHNL# 76: [POWER IR84-DALHOUSIE]
CHNL# 75: [POWER IR82_NUTTBY]
CHNL# 74: [POWER IR45_AMHERST]
TIME (SECONDS)
THU, JAN 29 2009 15:51
NS WIND MW

2013 WINTER PEAK STORA MIN
NS-NB=0; NB-NE=500; CBX=732; ONI=961 ONS=851
3 PHASE FAULT ON L6012 AT 120H BRUSHY
RECLOSES IN 5 SECONDS
FILE: a105-L6012_3ph_recl-2013WP-NS-0.out
CHNL# 133: [VOLT199125 [ONSLOW 345.00]]
CHNL# 132: [VOLT199120 [HOPEWELL345.00]]
CHNL# 131: [VOLT199045 [WOODBINE345.00]]
CHNL# 130: [VOLT190320 [SALBRY 345.00]]
CHNL# 128: [VOLT190004 [KESWICK 345.00]]
CHNL# 127: [VOLT 70002 [ORRINGTN345.00]]
TIME (SECONDS)
THU, JAN 29 2009 15:51
"345KV VOLTAGE"

2013 WINTER PEAK STORA MIN
NS-NB=0; NB-NE=500; CBX=732; ONI=961 ONS=851
3 PHASE FAULT ON L6012 AT 120H BRUSHY
RECLOSES IN 5 SECONDS
FILE: a105-L6012_3ph_recl-2013WP-NS-0.out
CHNL# 125: 60*(1+[FREQ199125 [ONSLOW 345.00]])
CHNL# 124: 60*(1+[FREQ199120 [HOPEWELL345.00]])
CHNL# 123: 60*(1+[FREQ199045 [WOODBINE345.00]])
CHNL# 122: 60*(1+[FREQ190320 [SALBRY 345.00]])
CHNL# 121: 60*(1+[FREQ190197 [C.COVE 345.00]])
CHNL# 120: 60*(1+[FREQ 70002 [ORRINGTN345.00]])
TIME (SECONDS)
THU, JAN 29 2009 15:51
FREQUENCY HZ

2013 WINTER PEAK STORA MIN
NS-NB=0; NB-NE=500; CBX=732; ONI=961 ONS=851
3 PHASE FAULT ON L6012 AT 120H BRUSHY
RECLOSES IN 5 SECONDS
FILE: a105-L6012_3ph_recl-2013WP-NS-0.out
CHNL# 146: [VOLT199280 [TUSKET A138.00]]
CHNL# 145: [VOLT199193 [HWAS 138.00]]
CHNL# 144: [VOLT199165 [TUFTCOVE138.00]]
CHNL# 143: [VOLT199135 [SPRNGHILL138.00]]
CHNL# 142: [VOLT199090 [50N-TREN138.00]]
CHNL# 141: [VOLT199051 [HASTINGS138.00]]
1.2000
0.70000
0.0
1.0000
2.0000
3.0000
4.0000
5.0000
6.0000
7.0000
8.0000
9.0000
10.000
TIME (SECONDS)
THU, JAN 29 2009 15:51
138KV BUS VOLTS

2013 WINTER PEAK STORA MIN
NS-NB=0; NB-NE=500; CBX=732; ONI=961 ONS=851
3 PHASE FAULT ON L6012 AT 120H BRUSHY
RECLOSES IN 5 SECONDS
FILE: a105-L6012_3ph_recl-2013WP-NS-0.out
CHNL# 140: [VOLT199240 [BWATER A230.00]]
CHNL# 139: [VOLT199200 [BRUSHY 230.00]]
CHNL# 138: [VOLT199130 [ONSLOW 230.00]]
CHNL# 137: [VOLT199050 [HASTINGS230.00]]
CHNL# 136: [VOLT199044 [PT.ACONI230.00]]
CHNL# 135: [VOLT199000 [LINGAN 230.00]]
1.2000
0.70000
0.0
1.0000
2.0000
3.0000
4.0000
5.0000
6.0000
7.0000
8.0000
9.0000
10.000
TIME (SECONDS)
THU, JAN 29 2009 15:51
230KV BUS VOLTS

2013 WINTER PEAK STORA MIN
NS-NB=0; NB-NE=500; CBX=732; ONI=961 ONS=851
3 PHASE FAULT ON L6012 AT 120H BRUSHY
RECLOSES IN 5 SECONDS
FILE: a105-L6012_3ph_recl-2013WP-NS-0.out
CHNL# 217: [L6533MW]
CHNL# 215: [L6503MW]
CHNL# 197: [L8003MW]
CHNL# 195: [L8004MW]
CHNL# 193: [L8001MW]
CHNL# 221: [L3001MW]
250.00
500.00
1000.0
0.0
-250.0
-1000.
0.70000
0.0
1.0000
2.0000
3.0000
4.0000
5.0000
6.0000
7.0000
8.0000
9.0000
10.000
TIME (SECONDS)
THU, JAN 29 2009 15:51
LINE FLOW MW

2013 WINTER PEAK STORA MIN
NS-NB=0; NB-NE=500; CBX=732; ONI=961 ONS=851
3 PHASE FAULT ON L6012 AT 120H BRUSHY
RECLOSES IN 5 SECONDS
FILE: a105-L6012_3ph_recl-2013WP-NS-0.out
CHNL# 154: [IR14T-DIGBYH69.0 VOLTS]
CHNL# 153: [IR137-STATIG25.0 VOLTS]
CHNL# 152: [IR114-GLENDH138.0 VOLTS]
CHNL# 151: [IR84-DALHOHV230.0 VOLTS]
CHNL# 150: [IR82_NUTBHV69.0 VOLTS]
CHNL# 149: [IR45_AMHERTP138.0 VOLTS]
1.2000
0.70000
0.0
1.0000
2.0000
3.0000
4.0000
5.0000
6.0000
7.0000
8.0000
9.0000
10.000
TIME (SECONDS)
THU, JAN 29 2009 15:51
WIND BUS VOLTS

2013 WINTER PEAK STORA MIN
NS-NB=0; NB-NE=500; CBX=732; ONI=961 ONS=851
3 PHASE FAULT ON B62 AT LAKESIDE
TRIPS L6008, L6016, 103H-T61
FILE: a106-103h-b62_3ph_nrect-2013WP-NS-0.out
CHNL#S 20.4: [ANGL199169 [TUFTCV3 14.400] [3]] [ANGL156661 [DARL G1 22.000] [1
CHNL#S 17.4: [ANGL199086 [TRENTON613.800] [6]] [ANGL156661 [DARL G1 22.000] [1
CHNL#S 16.4: [ANGL199085 [TRENTN5 13.800] [5]] [ANGL156661 [DARL G1 22.000] [1
CHNL#S 15.4: [ANGL199061 [TMP1 STO13.800] [1]] [ANGL156661 [DARL G1 22.000] [1
CHNL#S 13.4: [ANGL199043 [ACONIG1 20.000] [1]] [ANGL156661 [DARL G1 22.000] [1
CHNL#S 11.4: [ANGL199001 [LINGAN1 14.400] [1]] [ANGL156661 [DARL G1 22.000] [1
TIME (SECONDS)
THU, JAN 29 2009 15:51
NS ANGLE

2013 WINTER PEAK STORA MIN
NS-NB=0; NB-NE=500; CBX=732; ONI=961 ONS=851
3 PHASE FAULT ON B62 AT LAKESIDE
TRIPS L6008, L6016, 103H-T61
FILE: a106-103h-b62_3ph_nrect-2013WP-NS-0.out
CHNL#S 10.4: [ANGL190472 [BLLDNG2 19.000] [1]] [ANGL156661 [DARL G1 22.000] [1
CHNL#S 6.4: [ANGL190456 [LEPRG1 26.000] [1]] [ANGL156661 [DARL G1 22.000] [1
CHNL#S 5.4: [ANGL190450 [MACTG1 13.800] [1]] [ANGL156661 [DARL G1 22.000] [1
CHNL#S 3.4: [ANGL126652 [RAV 3 22.000] [1]] [ANGL156661 [DARL G1 22.000] [1
CHNL#S 2.4: [ANGL101063 [MYST G7 22.000] [1]] [ANGL156661 [DARL G1 22.000] [1
CHNL#S 7.4: [ANGL190457 [C.CVG1 19.000] [1]] [ANGL156661 [DARL G1 22.000] [1
TIME (SECONDS)
THU, JAN 29 2009 15:51
"NE,NY,NB ANGLE"

2013 WINTER PEAK STORA MIN
NS-NB=0; NB-NE=500; CBX=732; ONI=961 ONS=851
3 PHASE FAULT ON B62 AT LAKESIDE
TRIPS L6008, L6016, 103H-T61
FILE: a106-103h-b62_3ph_nrect-2013WP-NS-0.out
CHNL# 59: [POWER199169 [TUFTCV3 14.400] [3]]
CHNL# 56: [POWER199086 [TRENTON613.800] [6]]
CHNL# 55: [POWER199085 [TRENTN5 13.800] [5]]
CHNL# 54: [POWER199061 [TMP1 STO13.800] [1]]
CHNL# 52: [POWER199043 [ACONIG1 20.000] [1]]
CHNL# 50: [POWER199001 [LINGAN1 14.400] [1]]
TIME (SECONDS)
THU, JAN 29 2009 15:51
NS MW

2013 WINTER PEAK STORA MIN
NS-NB=0; NB-NE=500; CBX=732; ONI=961 ONS=851
3 PHASE FAULT ON B62 AT LAKESIDE
TRIPS L6008, L6016, 103H-T61
FILE: a106-103h-b62_3ph_nrect-2013WP-NS-0.out
CHNL# 49: [POWER190472 [BLLDNG2 19.000] [1]]
CHNL# 45: [POWER190456 [LEPRG1 26.000] [1]]
CHNL# 44: [POWER190450 [MACTG1 13.800] [1]]
CHNL# 42: [POWER126652 [RAV 3 22.000] [1]]
CHNL# 41: [POWER101063 [MYST G7 22.000] [1]]
CHNL# 46: [POWER190457 [C.CVG1 19.000] [1]]
TIME (SECONDS)
THU, JAN 29 2009 15:51
"NE,NY,NB POWER"

2013 WINTER PEAK STORA MIN
NS-NB=0; NB-NE=500; CBX=732; ONI=961 ONS=851
3 PHASE FAULT ON B62 AT LAKESIDE
TRIPS L6008, L6016, 103H-T61
FILE: a106-103h-b62_3ph_nrec-2013WP-NS-0.out
CHNL# 119: [VARS IR141-DIGBY]
CHNL# 118: [VARS IR137-STATIA]
CHNL# 117: [VARS IR114-GLENDHU]
CHNL# 116: [VARS IR84-DALHOUSIE]
CHNL# 115: [VARS IR82_NUTTBY]
CHNL# 114: [VARS IR45_AMHERST]
0.50000
-0.5000
0.0
1.0000
2.0000
3.0000
4.0000
5.0000
6.0000
7.0000
8.0000
9.0000
10.000
TIME (SECONDS)
THU, JAN 29 2009 15:51
NS WIND MV

2013 WINTER PEAK STORA MIN
NS-NB=0; NB-NE=500; CBX=732; ONI=961 ONS=851
3 PHASE FAULT ON B62 AT LAKESIDE
TRIPS L6008, L6016, 103H-T61
FILE: a106-103h-b62_3ph_nrec-2013WP-NS-0.out
CHNL# 79: [POWER IR141-DIGBY]
CHNL# 78: [POWER IR137-STATIA]
CHNL# 77: [POWER IR114-GLENDHU]
CHNL# 76: [POWER IR84-DALHOUSIE]
CHNL# 75: [POWER IR82_NUTTBY]
CHNL# 74: [POWER IR45_AMHERST]
1.0000
0.0
1.0000
2.0000
3.0000
4.0000
5.0000
6.0000
7.0000
8.0000
9.0000
10.000
TIME (SECONDS)
THU, JAN 29 2009 15:51
NS WIND MW

2013 WINTER PEAK STORA MIN
NS-NB=0; NB-NE=500; CBX=732; ONI=961 ONS=851
3 PHASE FAULT ON B62 AT LAKESIDE
TRIPS L6008, L6016, 103H-T61
FILE: a106-103h-b62_3ph_nrec-2013WP-NS-0.out
CHNL# 133: [VOLT199125 [ONSLOW 345.00]]
CHNL# 132: [VOLT199120 [HOPEWELL 345.00]]
CHNL# 131: [VOLT199045 [WOODBINE345.00]]
CHNL# 130: [VOLT190320 [SALBRY 345.00]]
CHNL# 128: [VOLT190004 [KESWICK 345.00]]
CHNL# 127: [VOLT 70002 [ORRINGTN345.00]]
1.1000
0.90000
0.0
1.0000
2.0000
3.0000
4.0000
5.0000
6.0000
7.0000
8.0000
9.0000
10.000
TIME (SECONDS)
THU, JAN 29 2009 15:51
"345KV VOLTAGE"

2013 WINTER PEAK STORA MIN
NS-NB=0; NB-NE=500; CBX=732; ONI=961 ONS=851
3 PHASE FAULT ON B62 AT LAKESIDE
TRIPS L6008, L6016, 103H-T61
FILE: a106-103h-b62_3ph_nrec-2013WP-NS-0.out
CHNL# 125: 60*(1+[FREQ199125 [ONSLOW 345.00]])
CHNL# 124: 60*(1+[FREQ199120 [HOPEWELL 345.00]])
CHNL# 123: 60*(1+[FREQ199045 [WOODBINE345.00]])
CHNL# 122: 60*(1+[FREQ190320 [SALBRY 345.00]])
CHNL# 121: 60*(1+[FREQ190197 [C.COVE 345.00]])
CHNL# 120: 60*(1+[FREQ 70002 [ORRINGTN345.00]])
60.500
59.500
0.0
1.0000
2.0000
3.0000
4.0000
5.0000
6.0000
7.0000
8.0000
9.0000
10.000
TIME (SECONDS)
THU, JAN 29 2009 15:51
FREQUENCY HZ

2013 WINTER PEAK STORA MIN
NS-NB=0; NB-NE=500; CBX=732; ONI=961 ONS=851
3 PHASE FAULT ON B62 AT LAKESIDE
TRIPS L6008, L6016, 103H-T61
FILE: a106-103h-b62_3ph_nrecl-2013WP-NS-0.out
CHNL# 145: [VOLT199193 [HHWAS_138.00]]
CHNL# 144: [VOLT199165 [TUFTCOVE138.00]]
CHNL# 143: [VOLT199138 [SPRNGHILL138.00]]
CHNL# 142: [VOLT199090 [SON-TREN138.00]]
CHNL# 141: [VOLT199051 [HASTINGS138.00]]
CHNL# 146: [VOLT199280 [TUSKET_A138.00]]
1.2000
0.70000
0.0
1.0000
2.0000
3.0000
4.0000
5.0000
6.0000
7.0000
8.0000
9.0000
10.000
TIME (SECONDS)
THU, JAN 29 2009 15:51
138KV BUS VOLTS

2013 WINTER PEAK STORA MIN
NS-NB=0; NB-NE=500; CBX=732; ONI=961 ONS=851
3 PHASE FAULT ON B62 AT LAKESIDE
TRIPS L6008, L6016, 103H-T61
FILE: a106-103h-b62_3ph_nrecl-2013WP-NS-0.out
CHNL# 139: [VOLT199200 [BRUSHY_230.00]]
CHNL# 138: [VOLT199130 [ONSLOW_230.00]]
CHNL# 137: [VOLT199050 [HASTINGS230.00]]
CHNL# 136: [VOLT199044 [PT.ACONI230.00]]
CHNL# 140: [VOLT199240 [BWATER_A230.00]]
CHNL# 135: [VOLT199000 [LINGAN_230.00]]
1.2000
0.70000
0.0
1.0000
2.0000
3.0000
4.0000
5.0000
6.0000
7.0000
8.0000
9.0000
10.000
TIME (SECONDS)
THU, JAN 29 2009 15:51
230KV BUS VOLTS

2013 WINTER PEAK STORA MIN
NS-NB=0; NB-NE=500; CBX=732; ONI=961 ONS=851
3 PHASE FAULT ON B62 AT LAKESIDE
TRIPS L6008, L6016, 103H-T61
FILE: a106-103h-b62_3ph_nrecl-2013WP-NS-0.out
CHNL# 215: [L6503MW]
CHNL# 197: [L8003MW]
CHNL# 195: [L8004MW]
CHNL# 193: [L8001MW]
CHNL# 217: [L6533MW]
CHNL# 221: [L3001MW]
250.00
500.00
1000.0
0.0
-250.0
-1000.
0.70000
0.0
1.0000
2.0000
3.0000
4.0000
5.0000
6.0000
7.0000
8.0000
9.0000
10.000
TIME (SECONDS)
THU, JAN 29 2009 15:51
LINE FLOW MW

2013 WINTER PEAK STORA MIN
NS-NB=0; NB-NE=500; CBX=732; ONI=961 ONS=851
3 PHASE FAULT ON B62 AT LAKESIDE
TRIPS L6008, L6016, 103H-T61
FILE: a106-103h-b62_3ph_nrecl-2013WP-NS-0.out
CHNL# 153: [IR137-STATIG25.0 VOLTS]
CHNL# 152: [IR114-GLENDH138.0 VOLTS]
CHNL# 151: [IR84-DALHOHV230.0 VOLTS]
CHNL# 150: [IR82_NUTBHV69.0 VOLTS]
CHNL# 154: [IR141-DIGBYH69.0 VOLTS]
CHNL# 149: [IR45_AMHERTP138.0 VOLTS]
1.2000
0.70000
0.0
1.0000
2.0000
3.0000
4.0000
5.0000
6.0000
7.0000
8.0000
9.0000
10.000
TIME (SECONDS)
THU, JAN 29 2009 15:51
WIND BUS VOLTS

2013 WINTER PEAK STORA MIN
NS-NB=0; NB-NE=500; CBX=732; ONI=961 ONS=851
3 PHASE FAULT ON L6003 AT SACKVILLE
RECLOSES FROM SACKVILLE IN 5 SECONDS
FILE: a107-l6003_3ph_recl-2013WP-NS-0.out
CHNL#S 20.4: [ANGL199169 [TUFTCV3 14.400] [3]] [ANGL156661 [DARL G1 22.000] [1
CHNL#S 17.4: [ANGL199086 [TRENTON613.800] [6]] [ANGL156661 [DARL G1 22.000] [1
CHNL#S 16.4: [ANGL199085 [TRENTN5 13.800] [5]] [ANGL156661 [DARL G1 22.000] [1
CHNL#S 15.4: [ANGL199061 [TMP1 STO13.800] [1]] [ANGL156661 [DARL G1 22.000] [1
CHNL#S 13.4: [ANGL199043 [ACONIG1 20.000] [1]] [ANGL156661 [DARL G1 22.000] [1
CHNL#S 11.4: [ANGL199001 [LINGAN1 14.400] [1]] [ANGL156661 [DARL G1 22.000] [1
100.00
-100.0
0.0
1.0000
2.0000
3.0000
4.0000
5.0000
6.0000
7.0000
8.0000
9.0000
10.000
TIME (SECONDS)
THU, JAN 29 2009 15:51
NS ANGLE

2013 WINTER PEAK STORA MIN
NS-NB=0; NB-NE=500; CBX=732; ONI=961 ONS=851
3 PHASE FAULT ON L6003 AT SACKVILLE
RECLOSES FROM SACKVILLE IN 5 SECONDS
FILE: a107-l6003_3ph_recl-2013WP-NS-0.out
CHNL#S 10.4: [ANGL190472 [BLLDNG2 19.000] [1]] [ANGL156661 [DARL G1 22.000] [1
CHNL#S 6.4: [ANGL190456 [LEPRG1 26.000] [1]] [ANGL156661 [DARL G1 22.000] [1
CHNL#S 5.4: [ANGL190450 [MACTG1 13.800] [1]] [ANGL156661 [DARL G1 22.000] [1
CHNL#S 3.4: [ANGL126652 [RAV 3 22.000] [1]] [ANGL156661 [DARL G1 22.000] [1
CHNL#S 2.4: [ANGL101063 [MYST G7 22.000] [1]] [ANGL156661 [DARL G1 22.000] [1
CHNL#S 7.4: [ANGL190457 [C.CVG1 19.000] [1]] [ANGL156661 [DARL G1 22.000] [1
100.00
-100.0
0.0
1.0000
2.0000
3.0000
4.0000
5.0000
6.0000
7.0000
8.0000
9.0000
10.000
TIME (SECONDS)
THU, JAN 29 2009 15:51
"NE,NY,NB ANGLE"

2013 WINTER PEAK STORA MIN
NS-NB=0; NB-NE=500; CBX=732; ONI=961 ONS=851
3 PHASE FAULT ON L6003 AT SACKVILLE
RECLOSES FROM SACKVILLE IN 5 SECONDS
FILE: a107-l6003_3ph_recl-2013WP-NS-0.out
CHNL# 59: [POWR199169 [TUFTCV3 14.400] [3]]
CHNL# 56: [POWR199086 [TRENTON613.800] [6]]
CHNL# 55: [POWR199085 [TRENTN5 13.800] [5]]
CHNL# 54: [POWR199061 [TMP1 STO13.800] [1]]
CHNL# 52: [POWR199043 [ACONIG1 20.000] [1]]
CHNL# 50: [POWR199001 [LINGAN1 14.400] [1]]
2.5000
1.0000
-1.500
0.0
1.0000
2.0000
3.0000
4.0000
5.0000
6.0000
7.0000
8.0000
9.0000
10.000
TIME (SECONDS)
THU, JAN 29 2009 15:51
NS MW

2013 WINTER PEAK STORA MIN
NS-NB=0; NB-NE=500; CBX=732; ONI=961 ONS=851
3 PHASE FAULT ON L6003 AT SACKVILLE
RECLOSES FROM SACKVILLE IN 5 SECONDS
FILE: a107-l6003_3ph_recl-2013WP-NS-0.out
CHNL# 49: [POWER190472 [BLLDNG2 19.000] [1]]
CHNL# 45: [POWER190456 [LEPRG1 26.000] [1]]
CHNL# 44: [POWER190450 [MACTG1 13.800] [1]]
CHNL# 42: [POWER126652 [RAV 3 22.000] [1]]
CHNL# 41: [POWER101063 [MYST G7 22.000] [1]]
CHNL# 46: [POWER190457 [C.CVG1 19.000] [1]]
7.0000
9.0000
5.0000
5.0000
6.5000
5.0000
2.0000
4.0000
0.0
0.0
1.0000
0.0
1.0000
2.0000
3.0000
4.0000
5.0000
6.0000
7.0000
8.0000
9.0000
10.000
TIME (SECONDS)
THU, JAN 29 2009 15:51
"NE,NY,NB POWER"

2013 WINTER PEAK STORA MIN
NS-NB=0; NB-NE=500; CBX=732; ONI=961 ONS=851
3 PHASE FAULT ON L6003 AT SACKVILLE
RECLOSES FROM SACKVILLE IN 5 SECONDS
FILE: a107-l6003_3ph_recl-2013WP-NS-0.out
CHNL# 119: [VARS IR141-DIGBY]
CHNL# 118: [VARS IR137-STATIA]
CHNL# 117: [VARS IR114-GLENDHU]
CHNL# 116: [VARS IR84-DALHOUSIE]
CHNL# 115: [VARS IR82_NUTTBY]
CHNL# 114: [VARS IR45_AMHERST]
0.50000
-0.5000
TIME (SECONDS)
THU, JAN 29 2009 15:51
NS WIND MV

2013 WINTER PEAK STORA MIN
NS-NB=0; NB-NE=500; CBX=732; ONI=961 ONS=851
3 PHASE FAULT ON L6003 AT SACKVILLE
RECLOSES FROM SACKVILLE IN 5 SECONDS
FILE: a107-l6003_3ph_recl-2013WP-NS-0.out
CHNL# 79: [POWER IR141-DIGBY]
CHNL# 78: [POWER IR137-STATIA]
CHNL# 77: [POWER IR114-GLENDHU]
CHNL# 76: [POWER IR84-DALHOUSIE]
CHNL# 75: [POWER IR82_NUTTBY]
CHNL# 74: [POWER IR45_AMHERST]
1.0000
0.0
TIME (SECONDS)
THU, JAN 29 2009 15:51
NS WIND MW

2013 WINTER PEAK STORA MIN
NS-NB=0; NB-NE=500; CBX=732; ONI=961 ONS=851
3 PHASE FAULT ON L6003 AT SACKVILLE
RECLOSES FROM SACKVILLE IN 5 SECONDS
FILE: a107-l6003_3ph_recl-2013WP-NS-0.out
CHNL# 133: [VOLT199125 [ONSLOW 345.00]]
CHNL# 132: [VOLT199120 [HOPEWELL 345.00]]
CHNL# 131: [VOLT199045 [WOODBINE345.00]]
CHNL# 130: [VOLT190320 [SALBRY 345.00]]
CHNL# 128: [VOLT190004 [KESWICK 345.00]]
CHNL# 127: [VOLT 70002 [ORRINGTN345.00]]
1.1000
0.90000
TIME (SECONDS)
THU, JAN 29 2009 15:51
"345KV VOLTAGE"

2013 WINTER PEAK STORA MIN
NS-NB=0; NB-NE=500; CBX=732; ONI=961 ONS=851
3 PHASE FAULT ON L6003 AT SACKVILLE
RECLOSES FROM SACKVILLE IN 5 SECONDS
FILE: a107-l6003_3ph_recl-2013WP-NS-0.out
CHNL# 125: 60*(1+[FREQ199125 [ONSLOW 345.00]])
CHNL# 124: 60*(1+[FREQ199120 [HOPEWELL 345.00]])
CHNL# 123: 60*(1+[FREQ199045 [WOODBINE 345.00]])
CHNL# 122: 60*(1+[FREQ190320 [SALBRY 345.00]])
CHNL# 121: 60*(1+[FREQ190197 [C.COVE 345.00]])
CHNL# 120: 60*(1+[FREQ 70002 [ORRINGTN345.00]])
60.500
59.500
TIME (SECONDS)
THU, JAN 29 2009 15:51
FREQUENCY HZ

2013 WINTER PEAK STORA MIN
NS-NB=0; NB-NE=500; CBX=732; ONI=961 ONS=851
3 PHASE FAULT ON L6003 AT SACKVILLE
RECLOSES FROM SACKVILLE IN 5 SECONDS
FILE: a107-l6003_3ph_recl-2013WP-NS-0.out
CHNL# 145: [VOLT199193 [HHWAS_138.00]]
CHNL# 144: [VOLT199165 [TUFTCOVE138.00]]
CHNL# 143: [VOLT199135 [SPRNGHILL138.00]]
CHNL# 142: [VOLT199090 [SONTREN138.00]]
CHNL# 141: [VOLT199051 [HASTINGS138.00]]
1.2000
0.70000
0.0
1.0000
2.0000
3.0000
4.0000
5.0000
6.0000
7.0000
8.0000
9.0000
10.000
TIME (SECONDS)
THU, JAN 29 2009 15:51
138KV BUS VOLTS

2013 WINTER PEAK STORA MIN
NS-NB=0; NB-NE=500; CBX=732; ONI=961 ONS=851
3 PHASE FAULT ON L6003 AT SACKVILLE
RECLOSES FROM SACKVILLE IN 5 SECONDS
FILE: a107-l6003_3ph_recl-2013WP-NS-0.out
CHNL# 139: [VOLT199200 [BRUSHY_230.00]]
CHNL# 138: [VOLT199130 [ONSLOW_230.00]]
CHNL# 137: [VOLT199050 [HASTINGS230.00]]
CHNL# 136: [VOLT199044 [PT.ACONI230.00]]
CHNL# 135: [VOLT199000 [LINGAN_230.00]]
1.2000
0.70000
0.0
1.0000
2.0000
3.0000
4.0000
5.0000
6.0000
7.0000
8.0000
9.0000
10.000
TIME (SECONDS)
THU, JAN 29 2009 15:51
230KV BUS VOLTS

2013 WINTER PEAK STORA MIN
NS-NB=0; NB-NE=500; CBX=732; ONI=961 ONS=851
3 PHASE FAULT ON L6003 AT SACKVILLE
RECLOSES FROM SACKVILLE IN 5 SECONDS
FILE: a107-l6003_3ph_recl-2013WP-NS-0.out
CHNL# 217: [L6533MW]
CHNL# 215: [L6503MW]
CHNL# 197: [L8003MW]
CHNL# 195: [L8004MW]
CHNL# 193: [L8001MW]
CHNL# 221: [L3001MW]
250.00
500.00
1000.0
0.0
-250.0
-1000.
0.0
1.0000
2.0000
3.0000
4.0000
5.0000
6.0000
7.0000
8.0000
9.0000
10.000
TIME (SECONDS)
THU, JAN 29 2009 15:51
LINE FLOW MW

2013 WINTER PEAK STORA MIN
NS-NB=0; NB-NE=500; CBX=732; ONI=961 ONS=851
3 PHASE FAULT ON L6003 AT SACKVILLE
RECLOSES FROM SACKVILLE IN 5 SECONDS
FILE: a107-l6003_3ph_recl-2013WP-NS-0.out
CHNL# 153: [IR137-STATIG25.0 VOLTS]
CHNL# 152: [IR114-GLENDH138.0 VOLTS]
CHNL# 151: [IR84-DALHOHV230.0 VOLTS]
CHNL# 150: [IR82_NUTBHV69.0 VOLTS]
CHNL# 149: [IR45_AMHERTP138.0 VOLTS]
1.2000
0.70000
0.0
1.0000
2.0000
3.0000
4.0000
5.0000
6.0000
7.0000
8.0000
9.0000
10.000
TIME (SECONDS)
THU, JAN 29 2009 15:51
WIND BUS VOLTS

2013 WINTER PEAK STORA MIN
NS-NB=0; NB-NE=500; CBX=732; ONI=961 ONS=851
3 PHASE FAULT ON L6003 AT TUFTS COVE
CLEARS FAULT IN 6 CYCLES RECLOSES FROM TUFTS COVE IN 3S
FILE: a108-l6003_91H_3ph_rect-2013WP-NS-0.out
CHNL#S 20.4: [ANGL199169 [TUFTCV3 14.400] [3]] [ANGL156661 [DARL G1 22.000] [1
CHNL#S 17.4: [ANGL199086 [TRENTON613.800] [6]] [ANGL156661 [DARL G1 22.000] [1
CHNL#S 16.4: [ANGL199085 [TRENTN5 13.800] [5]] [ANGL156661 [DARL G1 22.000] [1
CHNL#S 15.4: [ANGL199061 [TMP1 STO13.800] [1]] [ANGL156661 [DARL G1 22.000] [1
CHNL#S 13.4: [ANGL199043 [ACONIG1 20.000] [1]] [ANGL156661 [DARL G1 22.000] [1
CHNL#S 11.4: [ANGL199001 [LINGAN1 14.400] [1]] [ANGL156661 [DARL G1 22.000] [1
100.00
-100.0
0.0
1.0000
2.0000
3.0000
4.0000
5.0000
6.0000
7.0000
8.0000
9.0000
10.000
TIME (SECONDS)
THU, JAN 29 2009 15:51
NS ANGLE

2013 WINTER PEAK STORA MIN
NS-NB=0; NB-NE=500; CBX=732; ONI=961 ONS=851
3 PHASE FAULT ON L6003 AT TUFTS COVE
CLEARS FAULT IN 6 CYCLES RECLOSES FROM TUFTS COVE IN 3S
FILE: a108-l6003_91H_3ph_rect-2013WP-NS-0.out
CHNL#S 10.4: [ANGL190472 [BLLDNG2 19.000] [1]] [ANGL156661 [DARL G1 22.000] [1
CHNL#S 6.4: [ANGL190456 [LEPRG1 26.000] [1]] [ANGL156661 [DARL G1 22.000] [1
CHNL#S 5.4: [ANGL190450 [MACTG1 13.800] [1]] [ANGL156661 [DARL G1 22.000] [1
CHNL#S 3.4: [ANGL126652 [RAV 3 22.000] [1]] [ANGL156661 [DARL G1 22.000] [1
CHNL#S 2.4: [ANGL101063 [MYST G7 22.000] [1]] [ANGL156661 [DARL G1 22.000] [1
CHNL#S 7.4: [ANGL190457 [C.CVG1 19.000] [1]] [ANGL156661 [DARL G1 22.000] [1
100.00
-100.0
0.0
1.0000
2.0000
3.0000
4.0000
5.0000
6.0000
7.0000
8.0000
9.0000
10.000
TIME (SECONDS)
THU, JAN 29 2009 15:51
"NE,NY,NB ANGLE"

2013 WINTER PEAK STORA MIN
NS-NB=0; NB-NE=500; CBX=732; ONI=961 ONS=851
3 PHASE FAULT ON L6003 AT TUFTS COVE
CLEARS FAULT IN 6 CYCLES RECLOSES FROM TUFTS COVE IN 3S
FILE: a108-l6003_91H_3ph_rect-2013WP-NS-0.out
CHNL# 59: [POWER199169 [TUFTCV3 14.400] [3]]
CHNL# 56: [POWER199086 [TRENTON613.800] [6]]
CHNL# 55: [POWER199085 [TRENTN5 13.800] [5]]
CHNL# 54: [POWER199061 [TMP1 STO13.800] [1]]
CHNL# 52: [POWER199043 [ACONIG1 20.000] [1]]
CHNL# 50: [POWER199001 [LINGAN1 14.400] [1]]
2.5000
0.0
-1.500
1.0000
0.0
TIME (SECONDS)
THU, JAN 29 2009 15:51
NS MW

2013 WINTER PEAK STORA MIN
NS-NB=0; NB-NE=500; CBX=732; ONI=961 ONS=851
3 PHASE FAULT ON L6003 AT TUFTS COVE
CLEARS FAULT IN 6 CYCLES RECLOSES FROM TUFTS COVE IN 3S
FILE: a108-l6003_91H_3ph_rect-2013WP-NS-0.out
CHNL# 49: [POWER190472 [BLLDNG2 19.000] [1]]
CHNL# 45: [POWER190456 [LEPRG1 26.000] [1]]
CHNL# 44: [POWER190450 [MACTG1 13.800] [1]]
CHNL# 42: [POWER126652 [RAV 3 22.000] [1]]
CHNL# 41: [POWER101063 [MYST G7 22.000] [1]]
CHNL# 46: [POWER190457 [C.CVG1 19.000] [1]]
7.0000
2.0000
9.0000
4.0000
5.0000
0.0
6.5000
1.0000
5.0000
0.0
TIME (SECONDS)
THU, JAN 29 2009 15:51
"NE,NY,NB POWER"

2013 WINTER PEAK STORA MIN
NS-NB=0; NB-NE=500; CBX=732; ONI=961 ONS=851
3 PHASE FAULT ON L6003 AT TUFTS COVE
CLEARS FAULT IN 6 CYCLES RECLOSES FROM TUFTS COVE IN 3S
FILE: a108-l6003_91H_3ph_recl-2013WP-NS-0.out
CHNL# 119: [VARS IR141-DIGBY]
CHNL# 118: [VARS IR137-STATIA]
CHNL# 117: [VARS IR114-GLENDHU]
CHNL# 116: [VARS IR84-DALHOUSIE]
CHNL# 115: [VARS IR82_NUTTBY]
CHNL# 114: [VARS IR45_AMHERST]
TIME (SECONDS)
THU, JAN 29 2009 15:51
NS WIND MV

2013 WINTER PEAK STORA MIN
NS-NB=0; NB-NE=500; CBX=732; ONI=961 ONS=851
3 PHASE FAULT ON L6003 AT TUFTS COVE
CLEARS FAULT IN 6 CYCLES RECLOSES FROM TUFTS COVE IN 3S
FILE: a108-l6003_91H_3ph_recl-2013WP-NS-0.out
CHNL# 79: [POWER IR141-DIGBY]
CHNL# 78: [POWER IR137-STATIA]
CHNL# 77: [POWER IR114-GLENDHU]
CHNL# 76: [POWER IR84-DALHOUSIE]
CHNL# 75: [POWER IR82_NUTTBY]
CHNL# 74: [POWER IR45_AMHERST]
TIME (SECONDS)
THU, JAN 29 2009 15:51
NS WIND MW

2013 WINTER PEAK STORA MIN
NS-NB=0; NB-NE=500; CBX=732; ONI=961 ONS=851
3 PHASE FAULT ON L6003 AT TUFTS COVE
CLEARS FAULT IN 6 CYCLES RECLOSES FROM TUFTS COVE IN 3S
FILE: a108-l6003_91H_3ph_recl-2013WP-NS-0.out
CHNL# 133: [VOLT199125 [ONSLOW 345.00]]
CHNL# 132: [VOLT199120 [HOPEWELL 345.00]]
CHNL# 131: [VOLT199045 [WOODBINE345.00]]
CHNL# 130: [VOLT190320 [SALBRY 345.00]]
CHNL# 128: [VOLT190004 [KESWICK 345.00]]
CHNL# 127: [VOLT 70002 [ORRINGTN345.00]]
TIME (SECONDS)
THU, JAN 29 2009 15:51
"345KV VOLTAGE"

2013 WINTER PEAK STORA MIN
NS-NB=0; NB-NE=500; CBX=732; ONI=961 ONS=851
3 PHASE FAULT ON L6003 AT TUFTS COVE
CLEARS FAULT IN 6 CYCLES RECLOSES FROM TUFTS COVE IN 3S
FILE: a108-l6003_91H_3ph_recl-2013WP-NS-0.out
CHNL# 125: 60*(1+[FREQ199125 [ONSLOW 345.00]])
CHNL# 124: 60*(1+[FREQ199120 [HOPEWELL 345.00]])
CHNL# 123: 60*(1+[FREQ199045 [WOODBINE345.00]])
CHNL# 122: 60*(1+[FREQ190320 [SALBRY 345.00]])
CHNL# 121: 60*(1+[FREQ190197 [C.COVE 345.00]])
CHNL# 120: 60*(1+[FREQ 70002 [ORRINGTN345.00]])
TIME (SECONDS)
THU, JAN 29 2009 15:51
FREQUENCY HZ

2013 WINTER PEAK STORA MIN
NS-NB=0; NB-NE=500; CBX=732; ONI=961 ONS=851
3 PHASE FAULT ON L6003 AT TUFTS COVE
CLEARS FAULT IN 6 CYCLES RECLOSES FROM TUFTS COVE IN 3S
FILE: a108-l6003_91H_3ph_recl-2013WP-NS-0.out
CHNL# 146: [VOLT199280 [TUSKET A138.00]]
CHNL# 145: [VOLT199193 [LH-WAS 138.00]]
CHNL# 144: [VOLT199165 [TUFT COVE138.00]]
CHNL# 143: [VOLT199138 [SPRNGHILL138.00]]
CHNL# 142: [VOLT199090 [50N-TREN138.00]]
CHNL# 141: [VOLT199051 [HASTINGS138.00]]
1.2000
0.70000
0.0
1.0000
2.0000
3.0000
4.0000
5.0000
6.0000
7.0000
8.0000
9.0000
10.000
TIME (SECONDS)
THU, JAN 29 2009 15:51
138KV BUS VOLTS

2013 WINTER PEAK STORA MIN
NS-NB=0; NB-NE=500; CBX=732; ONI=961 ONS=851
3 PHASE FAULT ON L6003 AT TUFTS COVE
CLEARS FAULT IN 6 CYCLES RECLOSES FROM TUFTS COVE IN 3S
FILE: a108-l6003_91H_3ph_recl-2013WP-NS-0.out
CHNL# 140: [VOLT199240 [BWATER A230.00]]
CHNL# 139: [VOLT199200 [BRUSHY 230.00]]
CHNL# 138: [VOLT199130 [ONSLOW 230.00]]
CHNL# 137: [VOLT199050 [HASTINGS230.00]]
CHNL# 136: [VOLT199044 [PT.ACONI230.00]]
CHNL# 135: [VOLT199000 [LINGAN 230.00]]
1.2000
0.70000
0.0
1.0000
2.0000
3.0000
4.0000
5.0000
6.0000
7.0000
8.0000
9.0000
10.000
TIME (SECONDS)
THU, JAN 29 2009 15:51
230KV BUS VOLTS

2013 WINTER PEAK STORA MIN
NS-NB=0; NB-NE=500; CBX=732; ONI=961 ONS=851
3 PHASE FAULT ON L6003 AT TUFTS COVE
CLEARS FAULT IN 6 CYCLES RECLOSES FROM TUFTS COVE IN 3S
FILE: a108-l6003_91H_3ph_recl-2013WP-NS-0.out
CHNL# 217: [L6513(MW)]
CHNL# 215: [L6503(MV)]
CHNL# 197: [L8003(MV)]
CHNL# 195: [L8004(MV)]
CHNL# 193: [L8001(MV)]
CHNL# 221: [L3001(MV)]
250.00
-250.0
500.00
0.0
1000.0
-1000.
0.0
1.0000
2.0000
3.0000
4.0000
5.0000
6.0000
7.0000
8.0000
9.0000
10.000
TIME (SECONDS)
THU, JAN 29 2009 15:51
LINE FLOW MW

2013 WINTER PEAK STORA MIN
NS-NB=0; NB-NE=500; CBX=732; ONI=961 ONS=851
3 PHASE FAULT ON L6003 AT TUFTS COVE
CLEARS FAULT IN 6 CYCLES RECLOSES FROM TUFTS COVE IN 3S
FILE: a108-l6003_91H_3ph_recl-2013WP-NS-0.out
CHNL# 154: [IR141-DIGBYH69.0 VOLTS]
CHNL# 153: [IR137-STATIG25.0 VOLTS]
CHNL# 152: [IR114-GLENDH138.0 VOLTS]
CHNL# 151: [IR84-DALHOHV230.0 VOLTS]
CHNL# 150: [IR82_NUTBHV69.0 VOLTS]
CHNL# 149: [IR45_AMHERTP138.0 VOLTS]
1.2000
0.70000
0.0
1.0000
2.0000
3.0000
4.0000
5.0000
6.0000
7.0000
8.0000
9.0000
10.000
TIME (SECONDS)
THU, JAN 29 2009 15:51
WIND BUS VOLTS

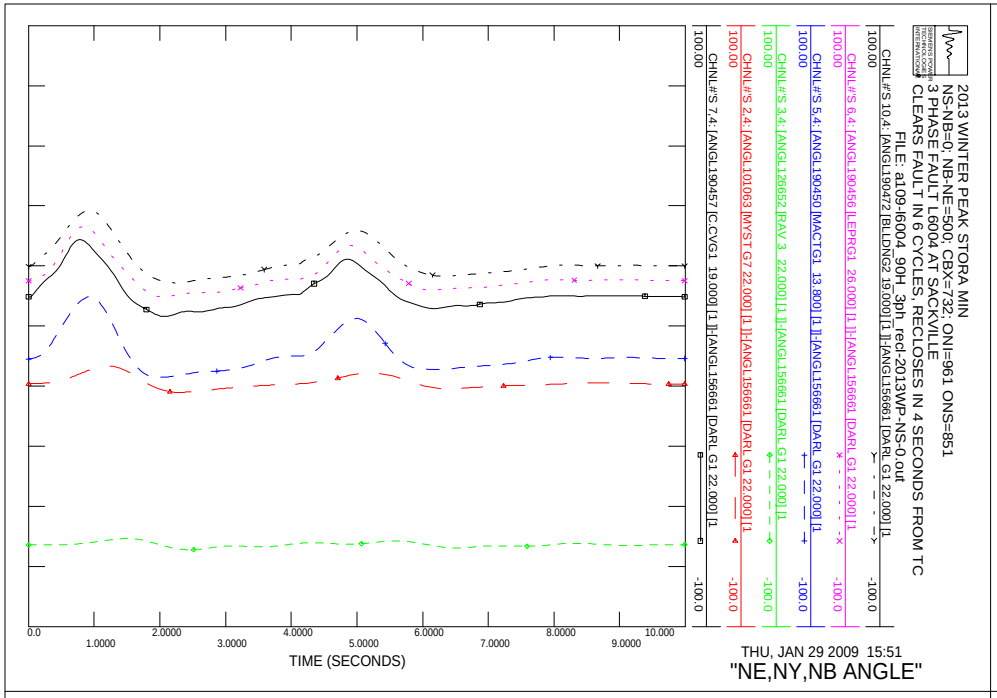
2013 WINTER PEAK STORA MIN
NS-NB=0; NB-NE=500; CBX=732; ONI=961 ONS=851
3 PHASE FAULT L6004 AT SACKVILLE
CLEARS FAULT IN 6 CYCLES, RECLOSES IN 4 SECONDS FROM TC
FILE: a109-l6004_90H_3ph_recl-2013WP-NS-0.out
CHNL#S 10,4: [ANGL190472 [BLLDNG2 19.000] [1]]-[ANGL156661 [DARL G1 22.000] [1
CHNL#S 6,4: [ANGL190456 [LEPRG1 26.000] [1]]-[ANGL156661 [DARL G1 22.000] [1
CHNL#S 5,4: [ANGL190450 [MACTG1 13.800] [1]]-[ANGL156661 [DARL G1 22.000] [1
CHNL#S 3,4: [ANGL126652 [RAV 3 22.000] [1]]-[ANGL156661 [DARL G1 22.000] [1
CHNL#S 2,4: [ANGL101063 [MYST G7 22.000] [1]]-[ANGL156661 [DARL G1 22.000] [1
CHNL#S 7,4: [ANGL190457 [C.CVG1 19.000] [1]]-[ANGL156661 [DARL G1 22.000] [1
100.00
-100.0
TIME (SECONDS)
THU, JAN 29 2009 15:51
"NE,NY,NB ANGLE"

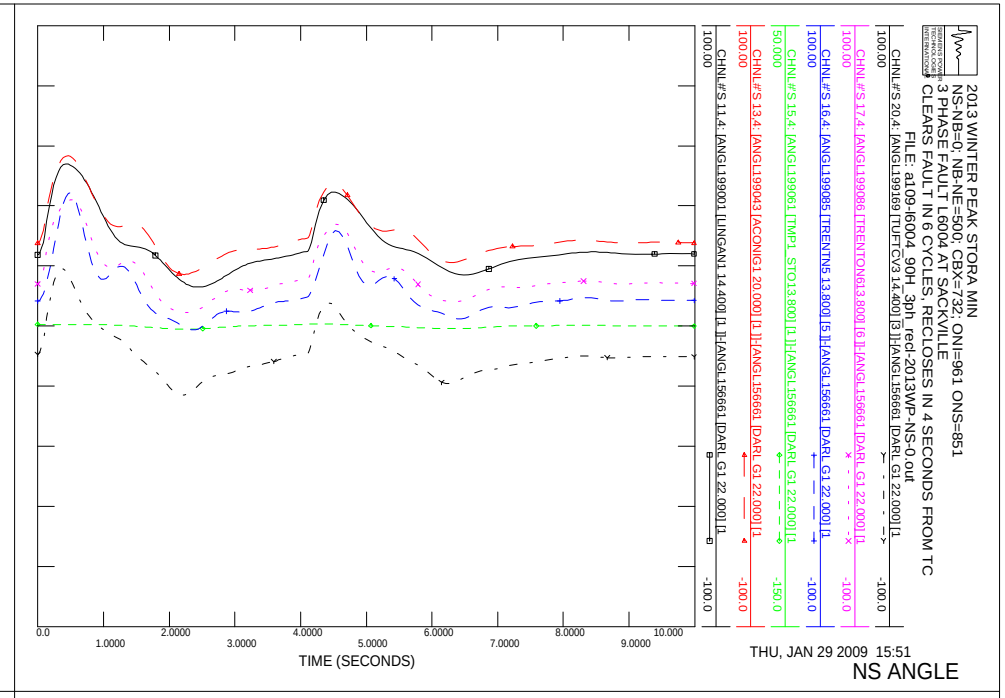
2013 WINTER PEAK STORA MIN
NS-NB=0; NB-NE=500; CBX=732; ONI=961 ONS=851
3 PHASE FAULT L6004 AT SACKVILLE
CLEARS FAULT IN 6 CYCLES, RECLOSES IN 4 SECONDS FROM TC
FILE: a109-l6004_90H_3ph_recl-2013WP-NS-0.out
CHNL#S 20,4: [ANGL199169 [TUFTCV3 14.400] [3]]-[ANGL156661 [DARL G1 22.000] [1
CHNL#S 17,4: [ANGL199086 [TRENTON613.800] [6]]-[ANGL156661 [DARL G1 22.000] [1
CHNL#S 16,4: [ANGL199085 [TRENTN5 13.800] [5]]-[ANGL156661 [DARL G1 22.000] [1
CHNL#S 15,4: [ANGL199061 [TMP1 STO13.800] [1]]-[ANGL156661 [DARL G1 22.000] [1
CHNL#S 13,4: [ANGL199043 [ACONIG1 20.000] [1]]-[ANGL156661 [DARL G1 22.000] [1
CHNL#S 11,4: [ANGL199001 [LINGAN1 14.400] [1]]-[ANGL156661 [DARL G1 22.000] [1
100.00
-100.0
TIME (SECONDS)
THU, JAN 29 2009 15:51
NS ANGLE

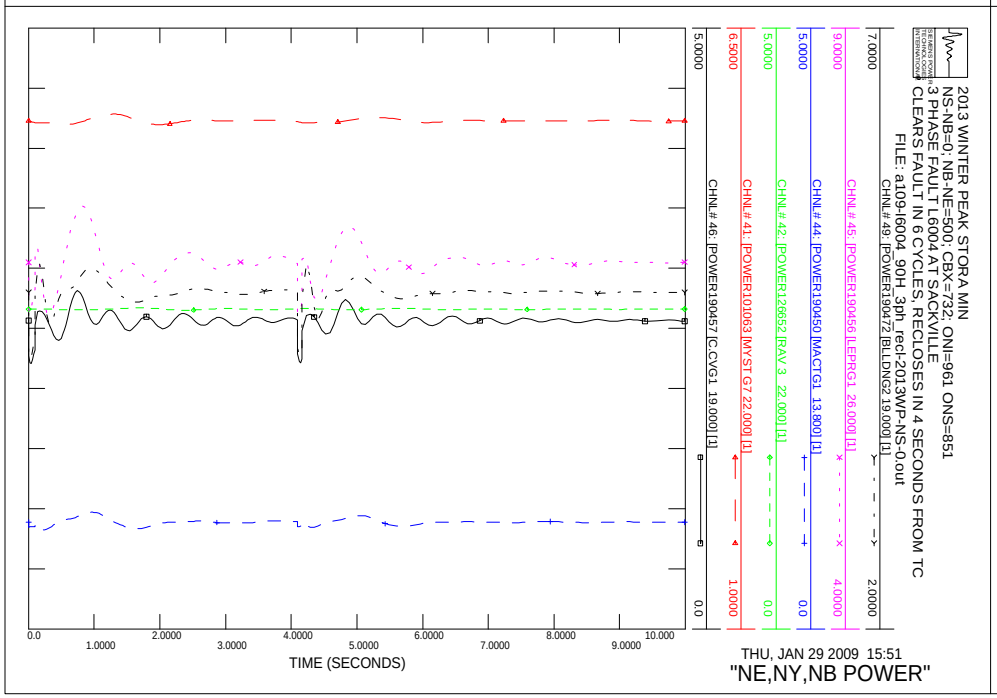
2013 WINTER PEAK STORA MIN
NS-NB=0; NB-NE=500; CBX=732; ONI=961 ONS=851
3 PHASE FAULT L6004 AT SACKVILLE
CLEARS FAULT IN 6 CYCLES, RECLOSES IN 4 SECONDS FROM TC
FILE: a109-l6004_90H_3ph_recl-2013WP-NS-0.out
CHNL# 49: [POWER190472 [BLLDNG2 19.000] [1]
CHNL# 45: [POWER190456 [LEPRG1 26.000] [1]
CHNL# 44: [POWER190450 [MACTG1 13.800] [1]
CHNL# 42: [POWER126652 [RAV 3 22.000] [1]
CHNL# 41: [POWER101063 [MYST G7 22.000] [1]
CHNL# 46: [POWER190457 [C.CVG1 19.000] [1]
7.0000
2.0000
9.0000
4.0000
5.0000
0.0
6.5000
1.0000
5.0000
0.0
TIME (SECONDS)
THU, JAN 29 2009 15:51
"NE,NY,NB POWER"

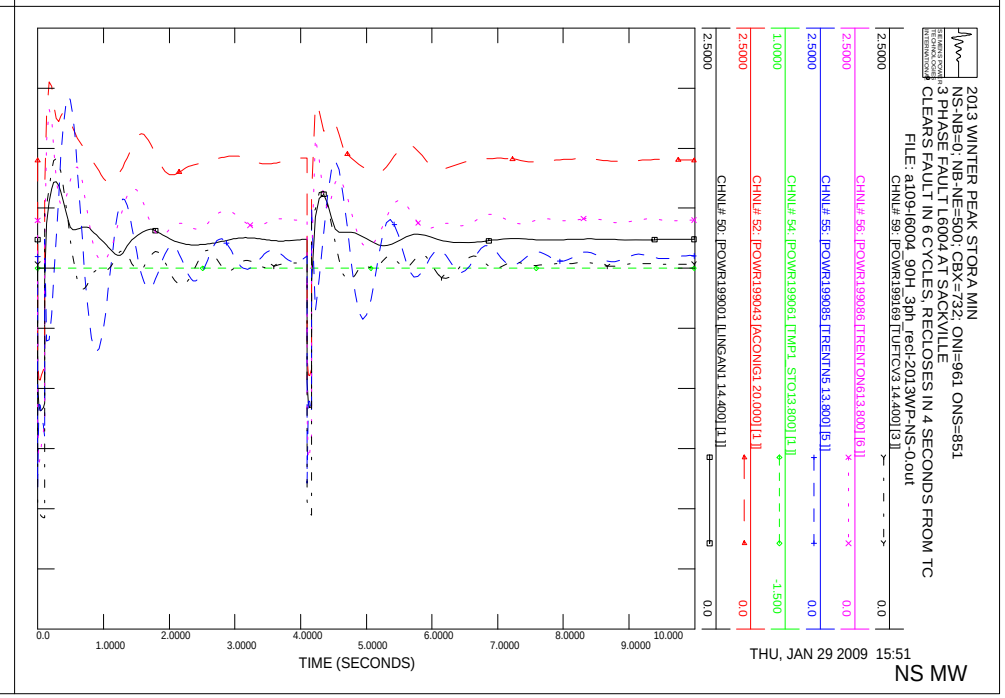
2013 WINTER PEAK STORA MIN
NS-NB=0; NB-NE=500; CBX=732; ONI=961 ONS=851
3 PHASE FAULT L6004 AT SACKVILLE
CLEARS FAULT IN 6 CYCLES, RECLOSES IN 4 SECONDS FROM TC
FILE: a109-l6004_90H_3ph_recl-2013WP-NS-0.out
CHNL# 59: [POWR199169 [TUFTCV3 14.400] [3]]
CHNL# 56: [POWR199086 [TRENTON613.800] [6]]
CHNL# 55: [POWR199085 [TRENTN5 13.800] [5]]
CHNL# 54: [POWR199061 [TMP1 STO13.800] [1]]
CHNL# 52: [POWR199043 [ACONIG1 20.000] [1]]
CHNL# 50: [POWR199001 [LINGAN1 14.400] [1]]
2.5000
0.0
1.0000
-1.500
TIME (SECONDS)
THU, JAN 29 2009 15:51
NS MW

2013 WINTER PEAK STORA MIN
NS-NB=0; NB-NE=500; CBX=732; ONI=961 ONS=851
3 PHASE FAULT L6004 AT SACKVILLE
CLEARS FAULT IN 6 CYCLES, RECLOSES IN 4 SECONDS FROM TC
FILE: a109-l6004_90H_3ph_rect-2013WP-NS-0.out
CHNL# 119: [VARS IR141-DIGBY]
CHNL# 118: [VARS IR137-STATIA]
CHNL# 117: [VARS IR114-GLENDHU]
CHNL# 116: [VARS IR84-DALHOUSIE]
CHNL# 115: [VARS IR82_NUTTBY]
CHNL# 114: [VARS IR45_AMHERST]
TIME (SECONDS)
THU, JAN 29 2009 15:51
NS WIND MV

2013 WINTER PEAK STORA MIN
NS-NB=0; NB-NE=500; CBX=732; ONI=961 ONS=851
3 PHASE FAULT L6004 AT SACKVILLE
CLEARS FAULT IN 6 CYCLES, RECLOSES IN 4 SECONDS FROM TC
FILE: a109-l6004_90H_3ph_rect-2013WP-NS-0.out
CHNL# 79: [POWER IR141-DIGBY]
CHNL# 78: [POWER IR137-STATIA]
CHNL# 77: [POWER IR114-GLENDHU]
CHNL# 76: [POWER IR84-DALHOUSIE]
CHNL# 75: [POWER IR82_NUTTBY]
CHNL# 74: [POWER IR45_AMHERST]
TIME (SECONDS)
THU, JAN 29 2009 15:51
NS WIND MW

2013 WINTER PEAK STORA MIN
NS-NB=0; NB-NE=500; CBX=732; ONI=961 ONS=851
3 PHASE FAULT L6004 AT SACKVILLE
CLEARS FAULT IN 6 CYCLES, RECLOSES IN 4 SECONDS FROM TC
FILE: a109-l6004_90H_3ph_rect-2013WP-NS-0.out
CHNL# 133: [VOLT199125 [ONSLOW 345.00]]
CHNL# 132: [VOLT199120 [HOPEWELL 345.00]]
CHNL# 131: [VOLT199045 [WOODBINE345.00]]
CHNL# 130: [VOLT190320 [SALBRY 345.00]]
CHNL# 128: [VOLT190004 [KESWICK 345.00]]
CHNL# 127: [VOLT 70002 [ORRINGTN345.00]]
TIME (SECONDS)
THU, JAN 29 2009 15:51
"345KV VOLTAGE"

2013 WINTER PEAK STORA MIN
NS-NB=0; NB-NE=500; CBX=732; ONI=961 ONS=851
3 PHASE FAULT L6004 AT SACKVILLE
CLEARS FAULT IN 6 CYCLES, RECLOSES IN 4 SECONDS FROM TC
FILE: a109-l6004_90H_3ph_rect-2013WP-NS-0.out
CHNL# 125: 60*(1+[FREQ199125 [ONSLOW 345.00]])
CHNL# 124: 60*(1+[FREQ199120 [HOPEWELL 345.00]])
CHNL# 123: 60*(1+[FREQ199045 [WOODBINE345.00]])
CHNL# 122: 60*(1+[FREQ190320 [SALBRY 345.00]])
CHNL# 121: 60*(1+[FREQ190197 [C.COVE 345.00]])
CHNL# 120: 60*(1+[FREQ 70002 [ORRINGTN345.00]])
TIME (SECONDS)
THU, JAN 29 2009 15:51
FREQUENCY HZ

2013 WINTER PEAK STORA MIN
NS-NB=0; NB-NE=500; CBX=732; ONI=961 ONS=851
3 PHASE FAULT L6004 AT SACKVILLE
CLEARS FAULT IN 6 CYCLES, RECLOSES IN 4 SECONDS FROM TC
FILE: a109-l6004_90H_3ph_rect-2013WP-NS-0.out
CHNL# 146: [VOLT199280 [TUSKET A138.00]]
CHNL# 145: [VOLT199193 [HHWAS 138.00]]
CHNL# 144: [VOLT199165 [TUFTCOVE138.00]]
CHNL# 143: [VOLT199138: [SPRNGHILL138.00]]
CHNL# 142: [VOLT199090 [50N-TREN138.00]]
CHNL# 141: [VOLT199051 [HASTINGS138.00]]
1.2000
0.70000
0.0
1.0000
2.0000
3.0000
4.0000
5.0000
6.0000
7.0000
8.0000
9.0000
10.000
TIME (SECONDS)
THU, JAN 29 2009 15:51
138KV BUS VOLTS

2013 WINTER PEAK STORA MIN
NS-NB=0; NB-NE=500; CBX=732; ONI=961 ONS=851
3 PHASE FAULT L6004 AT SACKVILLE
CLEARS FAULT IN 6 CYCLES, RECLOSES IN 4 SECONDS FROM TC
FILE: a109-l6004_90H_3ph_rect-2013WP-NS-0.out
CHNL# 140: [VOLT199240 [BWATER A230.00]]
CHNL# 139: [VOLT199200 [BRUSHY 230.00]]
CHNL# 138: [VOLT199130 [ONSLOW 230.00]]
CHNL# 137: [VOLT199050 [HASTINGS230.00]]
CHNL# 136: [VOLT199044 [PT.ACONI230.00]]
CHNL# 135: [VOLT199000 [LINGAN 230.00]]
1.2000
0.70000
0.0
1.0000
2.0000
3.0000
4.0000
5.0000
6.0000
7.0000
8.0000
9.0000
10.000
TIME (SECONDS)
THU, JAN 29 2009 15:51
230KV BUS VOLTS

2013 WINTER PEAK STORA MIN
NS-NB=0; NB-NE=500; CBX=732; ONI=961 ONS=851
3 PHASE FAULT L6004 AT SACKVILLE
CLEARS FAULT IN 6 CYCLES, RECLOSES IN 4 SECONDS FROM TC
FILE: a109-l6004_90H_3ph_rect-2013WP-NS-0.out
CHNL# 217: [L6513MW]
CHNL# 215: [L6503MW]
CHNL# 197: [L8003MW]
CHNL# 195: [L8004MW]
CHNL# 193: [L8001MW]
CHNL# 221: [L3001MW]
250.00
-250.0
500.00
0.0
1000.0
-1000.
0.0
1.0000
2.0000
3.0000
4.0000
5.0000
6.0000
7.0000
8.0000
9.0000
10.000
TIME (SECONDS)
THU, JAN 29 2009 15:51
LINE FLOW MW

2013 WINTER PEAK STORA MIN
NS-NB=0; NB-NE=500; CBX=732; ONI=961 ONS=851
3 PHASE FAULT L6004 AT SACKVILLE
CLEARS FAULT IN 6 CYCLES, RECLOSES IN 4 SECONDS FROM TC
FILE: a109-l6004_90H_3ph_rect-2013WP-NS-0.out
CHNL# 154: [IR141-DIGBYH69.0 VOLTS]
CHNL# 153: [IR137-STATIG25.0 VOLTS]
CHNL# 152: [IR114-GLENDH138.0 VOLTS]
CHNL# 151: [IR84-DALHOHV230.0 VOLTS]
CHNL# 150: [IR82 NUTBHV69.0 VOLTS]
CHNL# 149: [IR45 AMHERTP138.0 VOLTS]
1.2000
0.70000
0.0
1.0000
2.0000
3.0000
4.0000
5.0000
6.0000
7.0000
8.0000
9.0000
10.000
TIME (SECONDS)
THU, JAN 29 2009 15:51
WIND BUS VOLTS

2013 WINTER PEAK STORA MIN
NS-NB=0; NB-NE=500; CBX=732; ONI=961 ONS=851
3 PHASE FAULT L6523 AT STORA
CLEARS FAULT IN 6 CYCLES, RECLOSES IN 5 SECONDS FROM POT
FILE: a110-l6523_3ph_recl-2013WP-NS-0.out
CHNL#S 20.4: [ANGL199169 [TUFTCV3 14.400] [3]] [ANGL156661 [DARL G1 22.000] [1]
CHNL#S 17.4: [ANGL199086 [TRENTON613.800] [6]] [ANGL156661 [DARL G1 22.000] [1]
CHNL#S 16.4: [ANGL199085 [TRENTN5 13.800] [5]] [ANGL156661 [DARL G1 22.000] [1]
CHNL#S 15.4: [ANGL199061 [TMP1 STO13.800] [1]] [ANGL156661 [DARL G1 22.000] [1]
CHNL#S 13.4: [ANGL199043 [ACONIG1 20.000] [1]] [ANGL156661 [DARL G1 22.000] [1]
CHNL#S 11.4: [ANGL199001 [LINGAN1 14.400] [1]] [ANGL156661 [DARL G1 22.000] [1]
THU, JAN 29 2009 15:51
TIME (SECONDS)
NS ANGLE

2013 WINTER PEAK STORA MIN
NS-NB=0; NB-NE=500; CBX=732; ONI=961 ONS=851
3 PHASE FAULT L6523 AT STORA
CLEARS FAULT IN 6 CYCLES, RECLOSES IN 5 SECONDS FROM POT
FILE: a110-l6523_3ph_recl-2013WP-NS-0.out
CHNL#S 10.4: [ANGL190472 [BLLDNG2 19.000] [1]] [ANGL156661 [DARL G1 22.000] [1]
CHNL#S 6.4: [ANGL190456 [LEPRG1 26.000] [1]] [ANGL156661 [DARL G1 22.000] [1]
CHNL#S 5.4: [ANGL190450 [MACTG1 13.800] [1]] [ANGL156661 [DARL G1 22.000] [1]
CHNL#S 3.4: [ANGL126652 [RAV 3 22.000] [1]] [ANGL156661 [DARL G1 22.000] [1]
CHNL#S 2.4: [ANGL101063 [MYST G7 22.000] [1]] [ANGL156661 [DARL G1 22.000] [1]
CHNL#S 7.4: [ANGL190457 [C.CVG1 19.000] [1]] [ANGL156661 [DARL G1 22.000] [1]
THU, JAN 29 2009 15:51
TIME (SECONDS)
"NE,NY,NB ANGLE"

2013 WINTER PEAK STORA MIN
NS-NB=0; NB-NE=500; CBX=732; ONI=961 ONS=851
3 PHASE FAULT L6523 AT STORA
CLEARS FAULT IN 6 CYCLES, RECLOSES IN 5 SECONDS FROM POT
FILE: a110-l6523_3ph_recl-2013WP-NS-0.out
CHNL# 59: [POWR199169 [TUFTCV3 14.400] [3]]
CHNL# 56: [POWR199086 [TRENTON613.800] [6]]
CHNL# 55: [POWR199085 [TRENTN5 13.800] [5]]
CHNL# 54: [POWR199061 [TMP1 STO13.800] [1]]
CHNL# 52: [POWR199043 [ACONIG1 20.000] [1]]
CHNL# 50: [POWR199001 [LINGAN1 14.400] [1]]
THU, JAN 29 2009 15:51
TIME (SECONDS)
NS MW

2013 WINTER PEAK STORA MIN
NS-NB=0; NB-NE=500; CBX=732; ONI=961 ONS=851
3 PHASE FAULT L6523 AT STORA
CLEARS FAULT IN 6 CYCLES, RECLOSES IN 5 SECONDS FROM POT
FILE: a110-l6523_3ph_recl-2013WP-NS-0.out
CHNL# 49: [POWER190472 [BLLDNG2 19.000] [1]]
CHNL# 45: [POWER190456 [LEPRG1 26.000] [1]]
CHNL# 44: [POWER190450 [MACTG1 13.800] [1]]
CHNL# 42: [POWER126652 [RAV 3 22.000] [1]]
CHNL# 41: [POWER101063 [MYST G7 22.000] [1]]
CHNL# 46: [POWER190457 [C.CVG1 19.000] [1]]
THU, JAN 29 2009 15:51
TIME (SECONDS)
"NE,NY,NB POWER"

2013 WINTER PEAK STORA MIN
NS-NB=0; NB-NE=500; CBX=732; ONI=961 ONS=851
3 PHASE FAULT L6523 AT STORA
CLEARS FAULT IN 6 CYCLES, RECLOSES IN 5 SECONDS FROM POT
FILE: a110-l6523_3ph_recl-2013WP-NS-0.out
CHNL# 119: [VARS IR141-DIGBY]
CHNL# 118: [VARS IR137-STATIA]
CHNL# 117: [VARS IR114-GLENDHU]
CHNL# 116: [VARS IR84-DALHOUSIE]
CHNL# 115: [VARS IR82_NUTTBY]
CHNL# 114: [VARS IR45_AMHERST]
TIME (SECONDS)
THU, JAN 29 2009 15:51
NS WIND MV

2013 WINTER PEAK STORA MIN
NS-NB=0; NB-NE=500; CBX=732; ONI=961 ONS=851
3 PHASE FAULT L6523 AT STORA
CLEARS FAULT IN 6 CYCLES, RECLOSES IN 5 SECONDS FROM POT
FILE: a110-l6523_3ph_recl-2013WP-NS-0.out
CHNL# 79: [POWER IR141-DIGBY]
CHNL# 78: [POWER IR137-STATIA]
CHNL# 77: [POWER IR114-GLENDHU]
CHNL# 76: [POWER IR84-DALHOUSIE]
CHNL# 75: [POWER IR82_NUTTBY]
CHNL# 74: [POWER IR45_AMHERST]
TIME (SECONDS)
THU, JAN 29 2009 15:51
NS WIND MW

2013 WINTER PEAK STORA MIN
NS-NB=0; NB-NE=500; CBX=732; ONI=961 ONS=851
3 PHASE FAULT L6523 AT STORA
CLEARS FAULT IN 6 CYCLES, RECLOSES IN 5 SECONDS FROM POT
FILE: a110-l6523_3ph_recl-2013WP-NS-0.out
CHNL# 133: [VOLT199125 [ONSLOW 345.00]]
CHNL# 132: [VOLT199120 [HOPEWELL 345.00]]
CHNL# 131: [VOLT199045 [WOODBINE345.00]]
CHNL# 130: [VOLT190320 [SALBRY 345.00]]
CHNL# 128: [VOLT190004 [KESWICK 345.00]]
CHNL# 127: [VOLT 70002 [ORRINGTN345.00]]
TIME (SECONDS)
THU, JAN 29 2009 15:51
"345KV VOLTAGE"

2013 WINTER PEAK STORA MIN
NS-NB=0; NB-NE=500; CBX=732; ONI=961 ONS=851
3 PHASE FAULT L6523 AT STORA
CLEARS FAULT IN 6 CYCLES, RECLOSES IN 5 SECONDS FROM POT
FILE: a110-l6523_3ph_recl-2013WP-NS-0.out
CHNL# 125: 60*(1+[FREQ199125 [ONSLOW 345.00]])
CHNL# 124: 60*(1+[FREQ199120 [HOPEWELL 345.00]])
CHNL# 123: 60*(1+[FREQ199045 [WOODBINE345.00]])
CHNL# 122: 60*(1+[FREQ190320 [SALBRY 345.00]])
CHNL# 121: 60*(1+[FREQ190197 [C.COVE 345.00]])
CHNL# 120: 60*(1+[FREQ 70002 [ORRINGTN345.00]])
TIME (SECONDS)
THU, JAN 29 2009 15:51
FREQUENCY HZ

2013 WINTER PEAK STORA MIN
NS-NB=0; NB-NE=500; CBX=732; ONI=961 ONS=851
3 PHASE FAULT L6523 AT STORA
CLEARS FAULT IN 6 CYCLES, RECLOSES IN 5 SECONDS FROM POT
FILE: a110-l6523_3ph_recl-2013WP-NS-0.out
CHNL# 146: [VOLT199280 [TUSKET A138.00]]
CHNL# 145: [VOLT199193 [HHWAS 138.00]]
CHNL# 144: [VOLT199165 [TUFTCOVE138.00]]
CHNL# 143: [VOLT199138 [SPRNGHILL138.00]]
CHNL# 142: [VOLT199090 [SON-TREN138.00]]
CHNL# 141: [VOLT199051 [HASTINGS138.00]]
1.2000
0.70000
0.0
1.0000
2.0000
3.0000
4.0000
5.0000
6.0000
7.0000
8.0000
9.0000
10.000
TIME (SECONDS)
THU, JAN 29 2009 15:51
138KV BUS VOLTS

2013 WINTER PEAK STORA MIN
NS-NB=0; NB-NE=500; CBX=732; ONI=961 ONS=851
3 PHASE FAULT L6523 AT STORA
CLEARS FAULT IN 6 CYCLES, RECLOSES IN 5 SECONDS FROM POT
FILE: a110-l6523_3ph_recl-2013WP-NS-0.out
CHNL# 140: [VOLT199240 [BWATER A230.00]]
CHNL# 139: [VOLT199200 [BRUSHY 230.00]]
CHNL# 138: [VOLT199130 [ONSLOW 230.00]]
CHNL# 137: [VOLT199050 [HASTINGS230.00]]
CHNL# 136: [VOLT199044 [PT.ACONI230.00]]
CHNL# 135: [VOLT199000 [LINGAN 230.00]]
1.2000
0.70000
0.0
1.0000
2.0000
3.0000
4.0000
5.0000
6.0000
7.0000
8.0000
9.0000
10.000
TIME (SECONDS)
THU, JAN 29 2009 15:51
230KV BUS VOLTS

2013 WINTER PEAK STORA MIN
NS-NB=0; NB-NE=500; CBX=732; ONI=961 ONS=851
3 PHASE FAULT L6523 AT STORA
CLEARS FAULT IN 6 CYCLES, RECLOSES IN 5 SECONDS FROM POT
FILE: a110-l6523_3ph_recl-2013WP-NS-0.out
CHNL# 217: [L6533MW]
CHNL# 215: [L6503MW]
CHNL# 197: [L8003MW]
CHNL# 195: [L8004MW]
CHNL# 193: [L8001MW]
CHNL# 221: [L3001MW]
250.00
500.00
1000.0
0.0
-250.0
-1000.
0.0
1.0000
2.0000
3.0000
4.0000
5.0000
6.0000
7.0000
8.0000
9.0000
10.000
TIME (SECONDS)
THU, JAN 29 2009 15:51
LINE FLOW MW

2013 WINTER PEAK STORA MIN
NS-NB=0; NB-NE=500; CBX=732; ONI=961 ONS=851
3 PHASE FAULT L6523 AT STORA
CLEARS FAULT IN 6 CYCLES, RECLOSES IN 5 SECONDS FROM POT
FILE: a110-l6523_3ph_recl-2013WP-NS-0.out
CHNL# 154: [IR141-DIGBYH69.0 VOLTS]
CHNL# 153: [IR137-STATIG25.0 VOLTS]
CHNL# 152: [IR114-GLENDH138.0 VOLTS]
CHNL# 151: [IR84-DALHOHV230.0 VOLTS]
CHNL# 150: [IR82-NUTBHV69.0 VOLTS]
CHNL# 149: [IR45-AMHERTP138.0 VOLTS]
1.2000
0.70000
0.0
1.0000
2.0000
3.0000
4.0000
5.0000
6.0000
7.0000
8.0000
9.0000
10.000
TIME (SECONDS)
THU, JAN 29 2009 15:51
WIND BUS VOLTS

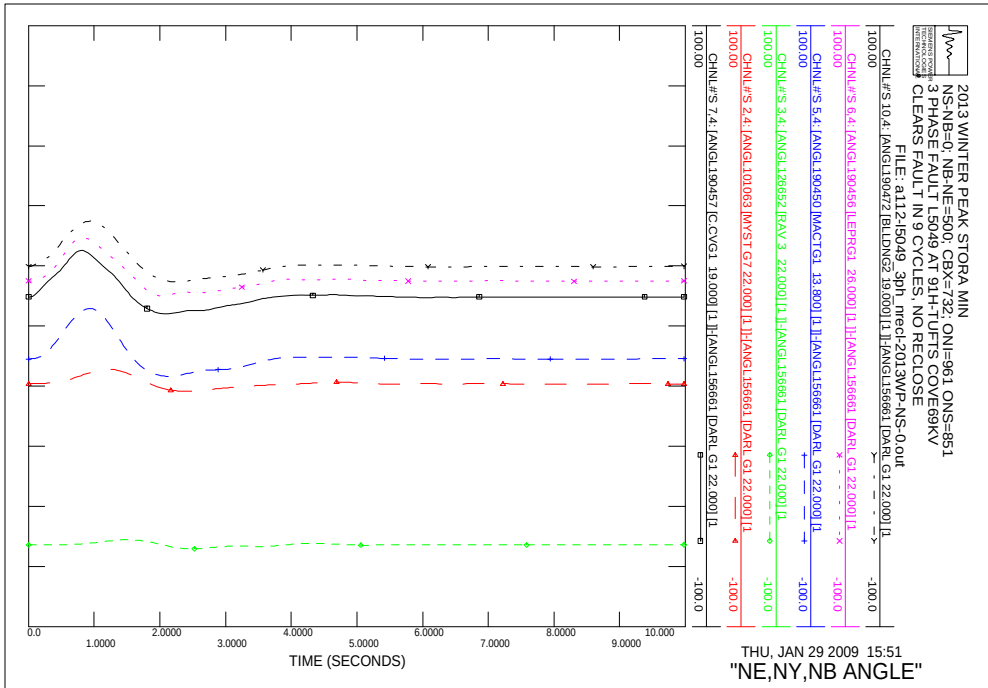
2013 WINTER PEAK STORA MIN
NS-NB=0; NB-NE=500; CBX=732; ONI=961 ONS=851
3 PHASE FAULT L5049 AT 91H-TUFTS COVE69KV
CLEARS FAULT IN 9 CYCLES, NO RECLOSE
FILE: a112-I5049_3ph_nrecl-2013WP-NS-0.out
CHNL#'S 10,4: [ANGL190472 [BLLDNG2 19.000] [1]]-[ANGL156661 [DARL G1 22.000] [1
CHNL#'S 6,4: [ANGL190456 [LEPRG1 26.000] [1]]-[ANGL156661 [DARL G1 22.000] [1
CHNL#'S 5,4: [ANGL190450 [MACTG1 13.800] [1]]-[ANGL156661 [DARL G1 22.000] [1
CHNL#'S 3,4: [ANGL126652 [RAV 3 22.000] [1]]-[ANGL156661 [DARL G1 22.000] [1
CHNL#'S 2,4: [ANGL101063 [MYST G7 22.000] [1]]-[ANGL156661 [DARL G1 22.000] [1
CHNL#'S 7,4: [ANGL190457 [C.CVG1 19.000] [1]]-[ANGL156661 [DARL G1 22.000] [1
TIME (SECONDS)
THU, JAN 29 2009 15:51
"NE,NY,NB ANGLE"

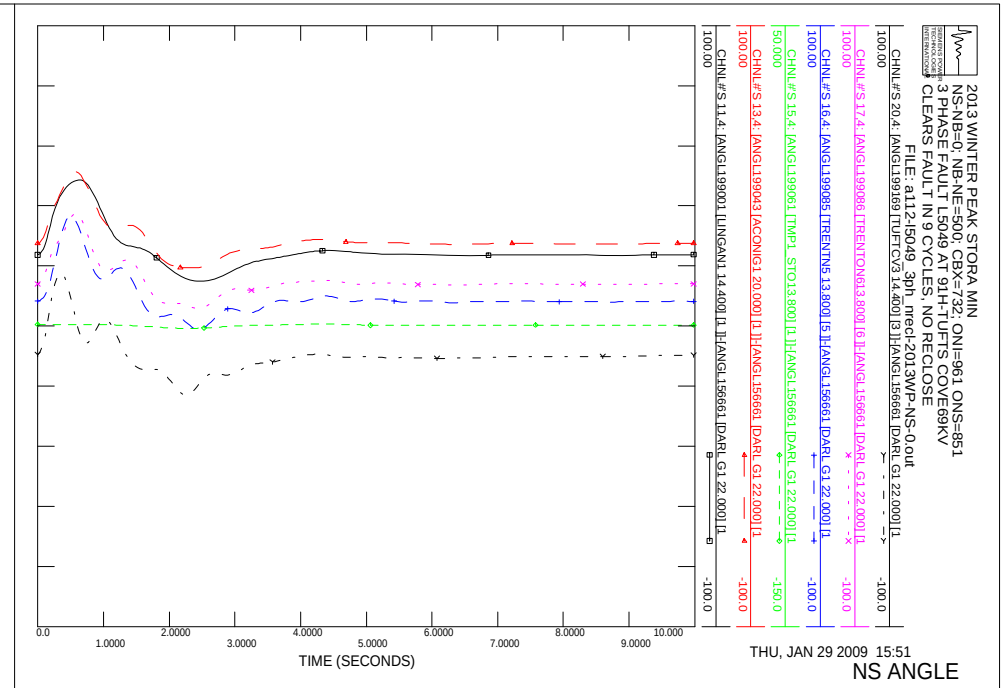
2013 WINTER PEAK STORA MIN
NS-NB=0; NB-NE=500; CBX=732; ONI=961 ONS=851
3 PHASE FAULT L5049 AT 91H-TUFTS COVE69KV
CLEARS FAULT IN 9 CYCLES, NO RECLOSE
FILE: a112-I5049_3ph_nrecl-2013WP-NS-0.out
CHNL#'S 20,4: [ANGL199169 [TUFTCV3 14.400] [3]]-[ANGL156661 [DARL G1 22.000] [1
CHNL#'S 17,4: [ANGL199086 [TRENTON613.800] [6]]-[ANGL156661 [DARL G1 22.000] [1
CHNL#'S 16,4: [ANGL199085 [TRENTN5 13.800] [5]]-[ANGL156661 [DARL G1 22.000] [1
CHNL#'S 15,4: [ANGL199061 [TMP1 STO13.800] [1]]-[ANGL156661 [DARL G1 22.000] [1
CHNL#'S 13,4: [ANGL199043 [ACONIG1 20.000] [1]]-[ANGL156661 [DARL G1 22.000] [1
CHNL#'S 11,4: [ANGL199001 [LINGAN1 14.400] [1]]-[ANGL156661 [DARL G1 22.000] [1
TIME (SECONDS)
THU, JAN 29 2009 15:51
NS ANGLE

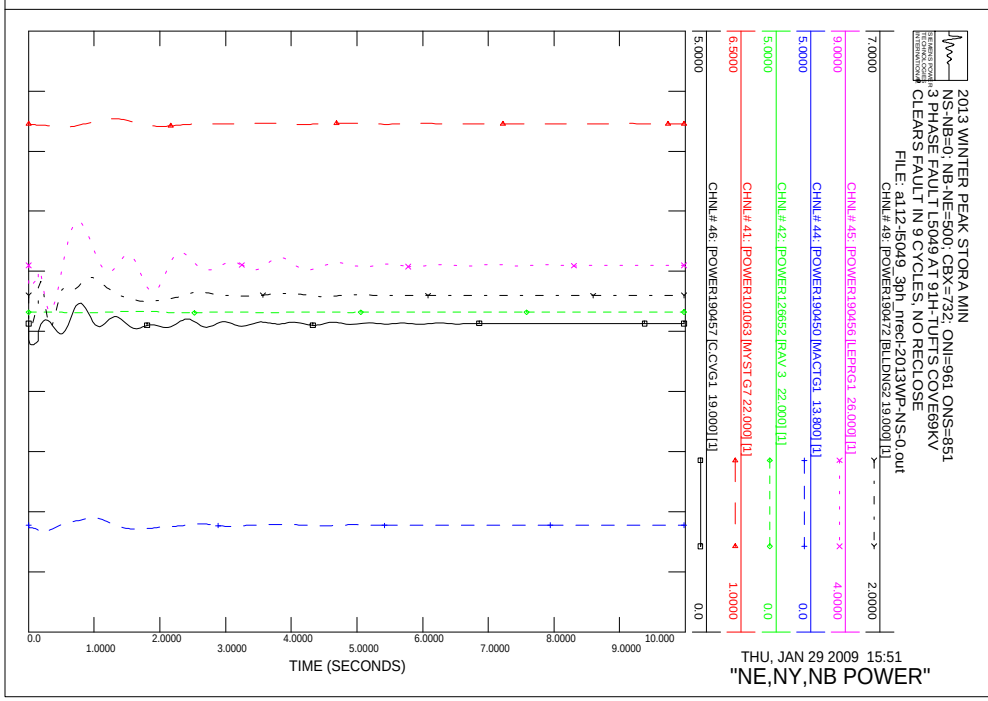
2013 WINTER PEAK STORA MIN
NS-NB=0; NB-NE=500; CBX=732; ONI=961 ONS=851
3 PHASE FAULT L5049 AT 91H-TUFTS COVE69KV
CLEARS FAULT IN 9 CYCLES, NO RECLOSE
FILE: a112-I5049_3ph_nrecl-2013WP-NS-0.out
CHNL# 49: [POWER190472 [BLLDNG2 19.000] [1]]
CHNL# 45: [POWER190456 [LEPRG1 26.000] [1]]
CHNL# 44: [POWER190450 [MACTG1 13.800] [1]]
CHNL# 42: [POWER126652 [RAV 3 22.000] [1]]
CHNL# 41: [POWER101063 [MYST G7 22.000] [1]]
CHNL# 46: [POWER190457 [C.CVG1 19.000] [1]]
TIME (SECONDS)
THU, JAN 29 2009 15:51
"NE,NY,NB POWER"

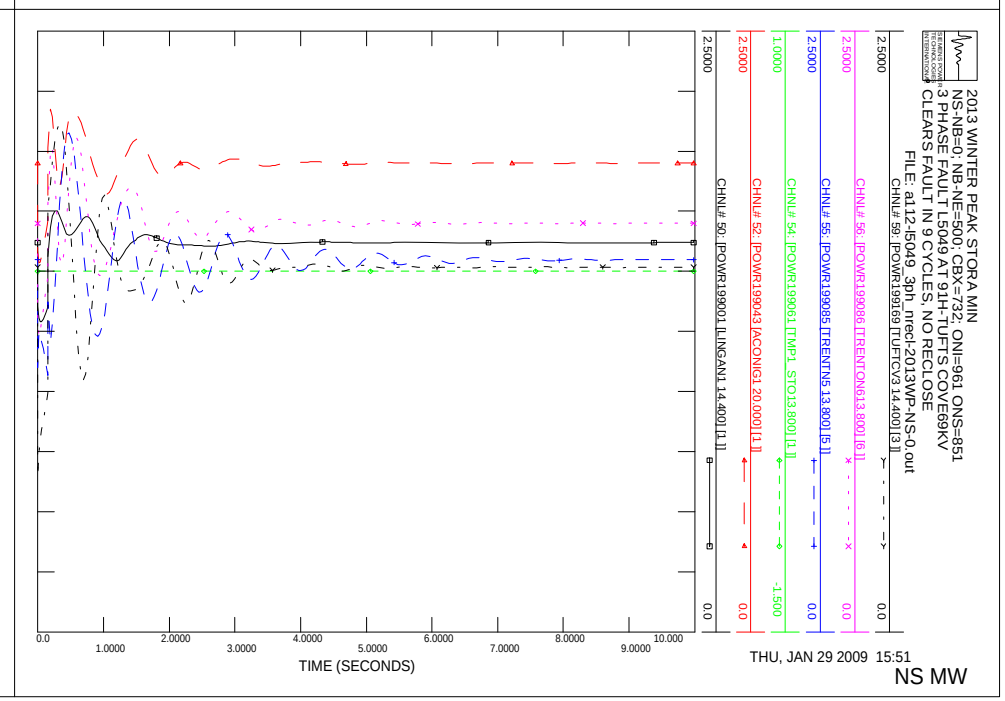
2013 WINTER PEAK STORA MIN
NS-NB=0; NB-NE=500; CBX=732; ONI=961 ONS=851
3 PHASE FAULT L5049 AT 91H-TUFTS COVE69KV
CLEARS FAULT IN 9 CYCLES, NO RECLOSE
FILE: a112-I5049_3ph_nrecl-2013WP-NS-0.out
CHNL# 59: [POWR199169 [TUFTCV3 14.400] [3]]
CHNL# 56: [POWR199086 [TRENTON613.800] [6]]
CHNL# 55: [POWR199085 [TRENTN5 13.800] [5]]
CHNL# 54: [POWR199061 [TMP1 STO13.800] [1]]
CHNL# 52: [POWR199043 [ACONIG1 20.000] [1]]
CHNL# 50: [POWR199001 [LINGAN1 14.400] [1]]
TIME (SECONDS)
THU, JAN 29 2009 15:51
NS MW

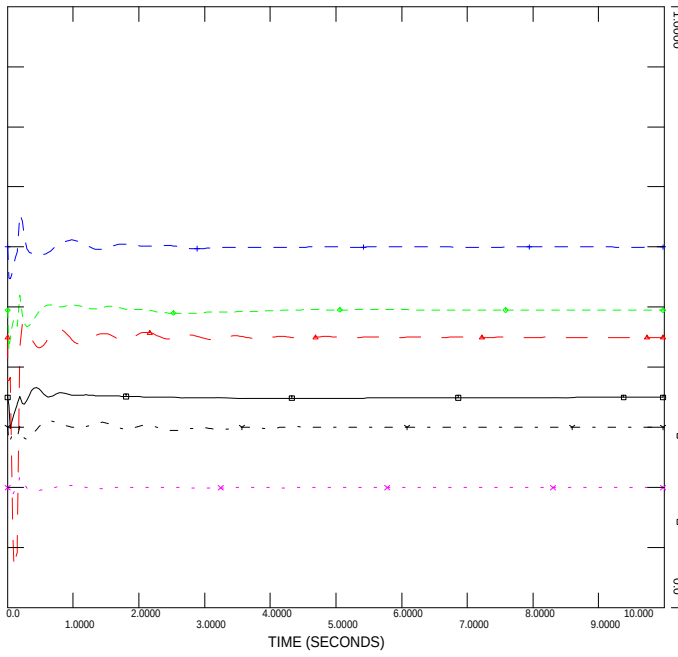

NS WIND MV

NS WIND MW

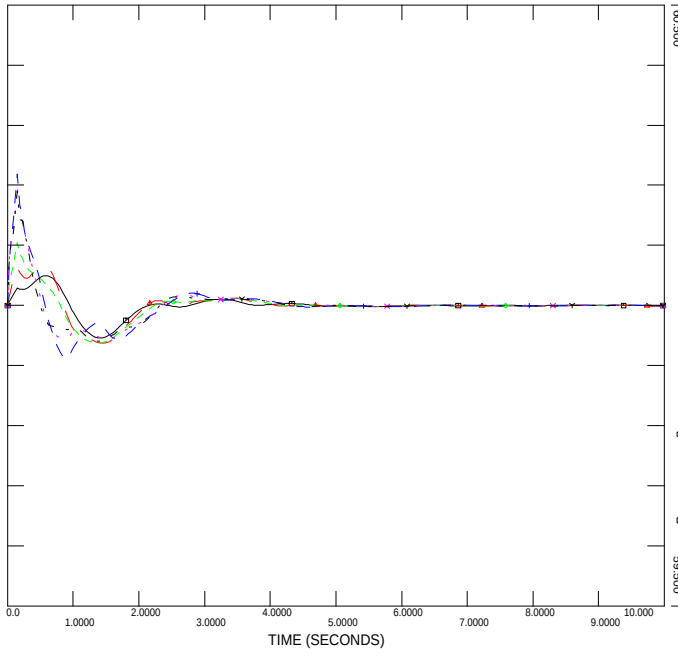

"345KV VOLTAGE"

FREQUENCY HZ

2013 WINTER PEAK STORA MIN
NS-NB=0; NB-NE=500; CBX=732; ONI=961 ONS=851
3 PHASE FAULT L5049 AT 91H-TUFTS COVE69KV
CLEARS FAULT IN 9 CYCLES, NO RECLOSE
FILE: a112-I5049_3ph_nrec-2013WP-NS-0.out
CHNL# 146: [VOLT199280 [TUSKET A138.00]]
CHNL# 145: [VOLT199193 [1H-WAS 138.00]]
CHNL# 144: [VOLT199165 [TUFTS COVE138.00]]
CHNL# 143: [VOLT199138 [SPRNGHILL138.00]]
CHNL# 142: [VOLT199090 [50N-TREN138.00]]
CHNL# 141: [VOLT199051 [HASTINGS138.00]]
1.2000
0.70000
0.0
1.0000
2.0000
3.0000
4.0000
5.0000
6.0000
7.0000
8.0000
9.0000
10.000
TIME (SECONDS)
THU, JAN 29 2009 15:51
138KV BUS VOLTS

2013 WINTER PEAK STORA MIN
NS-NB=0; NB-NE=500; CBX=732; ONI=961 ONS=851
3 PHASE FAULT L5049 AT 91H-TUFTS COVE69KV
CLEARS FAULT IN 9 CYCLES, NO RECLOSE
FILE: a112-I5049_3ph_nrec-2013WP-NS-0.out
CHNL# 140: [VOLT199240 [BWATER A230.00]]
CHNL# 139: [VOLT199200 [BRUSHY 230.00]]
CHNL# 138: [VOLT199130 [ONSLOW 230.00]]
CHNL# 137: [VOLT199050 [HASTINGS230.00]]
CHNL# 136: [VOLT199044 [PT.ACONI230.00]]
CHNL# 135: [VOLT199000 [LINGAN 230.00]]
1.2000
0.70000
0.0
1.0000
2.0000
3.0000
4.0000
5.0000
6.0000
7.0000
8.0000
9.0000
10.000
TIME (SECONDS)
THU, JAN 29 2009 15:51
230KV BUS VOLTS

2013 WINTER PEAK STORA MIN
NS-NB=0; NB-NE=500; CBX=732; ONI=961 ONS=851
3 PHASE FAULT L5049 AT 91H-TUFTS COVE69KV
CLEARS FAULT IN 9 CYCLES, NO RECLOSE
FILE: a112-I5049_3ph_nrec-2013WP-NS-0.out
CHNL# 217: [L6513MWV]
CHNL# 215: [L6503MWV]
CHNL# 197: [L8003MWV]
CHNL# 195: [L8004MWV]
CHNL# 193: [L8001MWV]
CHNL# 221: [L3001MWV]
250.00
500.00
1000.0
0.0
-250.0
-1000.
0.0
1.0000
2.0000
3.0000
4.0000
5.0000
6.0000
7.0000
8.0000
9.0000
10.000
TIME (SECONDS)
THU, JAN 29 2009 15:51
LINE FLOW MW

2013 WINTER PEAK STORA MIN
NS-NB=0; NB-NE=500; CBX=732; ONI=961 ONS=851
3 PHASE FAULT L5049 AT 91H-TUFTS COVE69KV
CLEARS FAULT IN 9 CYCLES, NO RECLOSE
FILE: a112-I5049_3ph_nrec-2013WP-NS-0.out
CHNL# 154: [IR141-DIGBYH69.0 VOLTS]
CHNL# 153: [IR137-STATIG25.0 VOLTS]
CHNL# 152: [IR114-GLENDH138.0 VOLTS]
CHNL# 151: [IR84-DALHOHV230.0 VOLTS]
CHNL# 150: [IR82 NUTBHV69.0 VOLTS]
CHNL# 149: [IR45 AMHERTP138.0 VOLTS]
1.2000
0.70000
0.0
1.0000
2.0000
3.0000
4.0000
5.0000
6.0000
7.0000
8.0000
9.0000
10.000
TIME (SECONDS)
THU, JAN 29 2009 15:51
WIND BUS VOLTS

2013 WINTER PEAK STORA MIN
NS-NB=0; NB-NE=500; CBX=732; ONI=961 ONS=851
3 PHASE FAULT L6009 AT 101H COBEQUID RD
CLEARS FAULT IN 6 CYCLES, RECLOSE FROM SACKVILLE IN 5S
FILE: a113-l6009_3ph_recl-2013WP-NS-0.out
CHNL#S 20.4: [ANGL199169 [TUFTCV3 14.400] [3]] [ANGL156661 [DARL G1 22.000] [1]
CHNL#S 17.4: [ANGL199086 [TRENTON613.800] [6]] [ANGL156661 [DARL G1 22.000] [1]
CHNL#S 16.4: [ANGL199085 [TRENTN5 13.800] [5]] [ANGL156661 [DARL G1 22.000] [1]
CHNL#S 15.4: [ANGL199061 [TMP1 STO13.800] [1]] [ANGL156661 [DARL G1 22.000] [1]
CHNL#S 13.4: [ANGL199043 [ACONIG1 20.000] [1]] [ANGL156661 [DARL G1 22.000] [1]
CHNL#S 11.4: [ANGL199001 [LINGAN1 14.400] [1]] [ANGL156661 [DARL G1 22.000] [1]
100.00
-100.0
0.0
1.0000
2.0000
3.0000
4.0000
5.0000
6.0000
7.0000
8.0000
9.0000
10.000
TIME (SECONDS)
THU, JAN 29 2009 15:51
NS ANGLE

2013 WINTER PEAK STORA MIN
NS-NB=0; NB-NE=500; CBX=732; ONI=961 ONS=851
3 PHASE FAULT L6009 AT 101H COBEQUID RD
CLEARS FAULT IN 6 CYCLES, RECLOSE FROM SACKVILLE IN 5S
FILE: a113-l6009_3ph_recl-2013WP-NS-0.out
CHNL#S 10.4: [ANGL190472 [BLLDNG2 19.000] [1]] [ANGL156661 [DARL G1 22.000] [1]
CHNL#S 6.4: [ANGL190456 [LEPRG1 26.000] [1]] [ANGL156661 [DARL G1 22.000] [1]
CHNL#S 5.4: [ANGL190450 [MACTG1 13.800] [1]] [ANGL156661 [DARL G1 22.000] [1]
CHNL#S 3.4: [ANGL126652 [RAV 3 22.000] [1]] [ANGL156661 [DARL G1 22.000] [1]
CHNL#S 2.4: [ANGL101063 [MYST G7 22.000] [1]] [ANGL156661 [DARL G1 22.000] [1]
CHNL#S 7.4: [ANGL190457 [C.CVG1 19.000] [1]] [ANGL156661 [DARL G1 22.000] [1]
100.00
-100.0
0.0
1.0000
2.0000
3.0000
4.0000
5.0000
6.0000
7.0000
8.0000
9.0000
10.000
TIME (SECONDS)
THU, JAN 29 2009 15:51
"NE,NY,NB ANGLE"

2013 WINTER PEAK STORA MIN
NS-NB=0; NB-NE=500; CBX=732; ONI=961 ONS=851
3 PHASE FAULT L6009 AT 101H COBEQUID RD
CLEARS FAULT IN 6 CYCLES, RECLOSE FROM SACKVILLE IN 5S
FILE: a113-l6009_3ph_recl-2013WP-NS-0.out
CHNL# 59: [POWER199169 [TUFTCV3 14.400] [3]]
CHNL# 56: [POWER199086 [TRENTON613.800] [6]]
CHNL# 55: [POWER199085 [TRENTN5 13.800] [5]]
CHNL# 54: [POWER199061 [TMP1 STO13.800] [1]]
CHNL# 52: [POWER199043 [ACONIG1 20.000] [1]]
CHNL# 50: [POWER199001 [LINGAN1 14.400] [1]]
2.5000
0.0
1.0000
-1.500
2.0000
3.0000
4.0000
5.0000
6.0000
7.0000
8.0000
9.0000
10.000
TIME (SECONDS)
THU, JAN 29 2009 15:51
NS MW

2013 WINTER PEAK STORA MIN
NS-NB=0; NB-NE=500; CBX=732; ONI=961 ONS=851
3 PHASE FAULT L6009 AT 101H COBEQUID RD
CLEARS FAULT IN 6 CYCLES, RECLOSE FROM SACKVILLE IN 5S
FILE: a113-l6009_3ph_recl-2013WP-NS-0.out
CHNL# 49: [POWER190472 [BLLDNG2 19.000] [1]]
CHNL# 45: [POWER190456 [LEPRG1 26.000] [1]]
CHNL# 44: [POWER190450 [MACTG1 13.800] [1]]
CHNL# 42: [POWER126652 [RAV 3 22.000] [1]]
CHNL# 41: [POWER101063 [MYST G7 22.000] [1]]
CHNL# 46: [POWER190457 [C.CVG1 19.000] [1]]
7.0000
2.0000
9.0000
4.0000
5.0000
0.0
6.5000
1.0000
5.0000
0.0
1.0000
2.0000
3.0000
4.0000
5.0000
6.0000
7.0000
8.0000
9.0000
10.000
TIME (SECONDS)
THU, JAN 29 2009 15:51
"NE,NY,NB POWER"

2013 WINTER PEAK STORA MIN
NS-NB=0; NB-NE=500; CBX=732; ONI=961 ONS=851
3 PHASE FAULT L6009 AT 101H COBEQUID RD
CLEARS FAULT IN 6 CYCLES, RECLOSE FROM SACKVILLE IN 5S
FILE: a113-l6009_3ph_recl-2013WP-NS-0.out
CHNL# 119: [VARS IR141-DIGBY]
CHNL# 118: [VARS IR137-STATIA]
CHNL# 117: [VARS IR114-GLENDHU]
CHNL# 116: [VARS IR84-DALHOUSIE]
CHNL# 115: [VARS IR82_NUTTBY]
CHNL# 114: [VARS IR45_AMHERST]
0.50000
-0.5000
0.0
1.0000
2.0000
3.0000
4.0000
5.0000
6.0000
7.0000
8.0000
9.0000
10.000
TIME (SECONDS)
THU, JAN 29 2009 15:51
NS WIND MV

2013 WINTER PEAK STORA MIN
NS-NB=0; NB-NE=500; CBX=732; ONI=961 ONS=851
3 PHASE FAULT L6009 AT 101H COBEQUID RD
CLEARS FAULT IN 6 CYCLES, RECLOSE FROM SACKVILLE IN 5S
FILE: a113-l6009_3ph_recl-2013WP-NS-0.out
CHNL# 79: [POWER IR141-DIGBY]
CHNL# 78: [POWER IR137-STATIA]
CHNL# 77: [POWER IR114-GLENDHU]
CHNL# 76: [POWER IR84-DALHOUSIE]
CHNL# 75: [POWER IR82_NUTTBY]
CHNL# 74: [POWER IR45_AMHERST]
1.0000
0.0
0.0
1.0000
2.0000
3.0000
4.0000
5.0000
6.0000
7.0000
8.0000
9.0000
10.000
TIME (SECONDS)
THU, JAN 29 2009 15:51
NS WIND MW

2013 WINTER PEAK STORA MIN
NS-NB=0; NB-NE=500; CBX=732; ONI=961 ONS=851
3 PHASE FAULT L6009 AT 101H COBEQUID RD
CLEARS FAULT IN 6 CYCLES, RECLOSE FROM SACKVILLE IN 5S
FILE: a113-l6009_3ph_recl-2013WP-NS-0.out
CHNL# 133: [VOLT199125 IONSLOW 345.00]
CHNL# 132: [VOLT199120 [HOPEWELL345.00]]
CHNL# 131: [VOLT199045 [WOODBINE345.00]]
CHNL# 130: [VOLT190320 [SALBRY 345.00]]
CHNL# 128: [VOLT190004 [KESWICK 345.00]]
CHNL# 127: [VOLT 70002 [ORRINGTN345.00]]
1.1000
0.90000
0.0
1.0000
2.0000
3.0000
4.0000
5.0000
6.0000
7.0000
8.0000
9.0000
10.000
TIME (SECONDS)
THU, JAN 29 2009 15:51
"345KV VOLTAGE"

2013 WINTER PEAK STORA MIN
NS-NB=0; NB-NE=500; CBX=732; ONI=961 ONS=851
3 PHASE FAULT L6009 AT 101H COBEQUID RD
CLEARS FAULT IN 6 CYCLES, RECLOSE FROM SACKVILLE IN 5S
FILE: a113-l6009_3ph_recl-2013WP-NS-0.out
CHNL# 125: 60*(1+[FREQ199125 [ONSLOW 345.00]])
CHNL# 124: 60*(1+[FREQ199120 [HOPEWELL345.00]])
CHNL# 123: 60*(1+[FREQ199045 [WOODBINE345.00]])
CHNL# 122: 60*(1+[FREQ190320 [SALBRY 345.00]])
CHNL# 121: 60*(1+[FREQ190197 [C.COVE 345.00]])
CHNL# 120: 60*(1+[FREQ 70002 [ORRINGTN345.00]])
60.500
59.500
0.0
1.0000
2.0000
3.0000
4.0000
5.0000
6.0000
7.0000
8.0000
9.0000
10.000
TIME (SECONDS)
THU, JAN 29 2009 15:51
FREQUENCY HZ

2013 WINTER PEAK STORA MIN
NS-NB=0; NB-NE=500; CBX=732; ONI=961 ONS=851
3 PHASE FAULT L6009 AT 101H COBEQUID RD
CLEARS FAULT IN 6 CYCLES, RECLOSE FROM SACKVILLE IN 5S
FILE: a113-l6009_3ph_recl-2013WP-NS-0.out
CHNL# 146: [VOLT199280 [TUSKET A138.00]]
CHNL# 145: [VOLT199193 [1H-WAS 138.00]]
CHNL# 144: [VOLT199165 [TUFTCOVE138.00]]
CHNL# 143: [VOLT199135 [SPRNGHILL138.00]]
CHNL# 142: [VOLT199090 [50N-TREN138.00]]
CHNL# 141: [VOLT199051 [HASTINGS138.00]]
1.2000
0.70000
TIME (SECONDS)
THU, JAN 29 2009 15:51
138KV BUS VOLTS

2013 WINTER PEAK STORA MIN
NS-NB=0; NB-NE=500; CBX=732; ONI=961 ONS=851
3 PHASE FAULT L6009 AT 101H COBEQUID RD
CLEARS FAULT IN 6 CYCLES, RECLOSE FROM SACKVILLE IN 5S
FILE: a113-l6009_3ph_recl-2013WP-NS-0.out
CHNL# 140: [VOLT199240 [BWATER A230.00]]
CHNL# 139: [VOLT199200 [BRUSHY 230.00]]
CHNL# 138: [VOLT199130 [ONSLOW 230.00]]
CHNL# 137: [VOLT199050 [HASTINGS230.00]]
CHNL# 136: [VOLT199044 [PT.ACONI230.00]]
CHNL# 135: [VOLT199000 [LINGAN 230.00]]
1.2000
0.70000
TIME (SECONDS)
THU, JAN 29 2009 15:51
230KV BUS VOLTS

2013 WINTER PEAK STORA MIN
NS-NB=0; NB-NE=500; CBX=732; ONI=961 ONS=851
3 PHASE FAULT L6009 AT 101H COBEQUID RD
CLEARS FAULT IN 6 CYCLES, RECLOSE FROM SACKVILLE IN 5S
FILE: a113-l6009_3ph_recl-2013WP-NS-0.out
CHNL# 217: [L6533MW]
CHNL# 215: [L6503MW]
CHNL# 197: [L8003MW]
CHNL# 195: [L8004MW]
CHNL# 193: [L8001MW]
CHNL# 221: [L3001MW]
250.00
-250.0
500.00
0.0
1000.0
-1000.
TIME (SECONDS)
THU, JAN 29 2009 15:51
LINE FLOW MW

2013 WINTER PEAK STORA MIN
NS-NB=0; NB-NE=500; CBX=732; ONI=961 ONS=851
3 PHASE FAULT L6009 AT 101H COBEQUID RD
CLEARS FAULT IN 6 CYCLES, RECLOSE FROM SACKVILLE IN 5S
FILE: a113-l6009_3ph_recl-2013WP-NS-0.out
CHNL# 154: [IR141-DIGBYH69.0 VOLTS]
CHNL# 153: [IR137-STATIG25.0 VOLTS]
CHNL# 152: [IR114-GLENDH138.0 VOLTS]
CHNL# 151: [IR84-DALHOHV230.0 VOLTS]
CHNL# 150: [IR82_NUTBHV69.0 VOLTS]
CHNL# 149: [IR45_AMHERTP138.0 VOLTS]
1.2000
0.70000
TIME (SECONDS)
THU, JAN 29 2009 15:51
WIND BUS VOLTS

2013 WINTER PEAK STORA MIN
NS-NB=0; NB-NE=500; CBX=732; ONI=961 ONS=851
3 PHASE FAULT ON L6503 AT TRENTON
CLEARED IN 6 CYCLES - RECLOSE ATTEMPT FROM ONSLOW
FILE: a103-L6503_3ph_1n_rect-2013WP-NS-0.out
CHNL# 20: [ANGL199169 [TUFTCV3 14.400] [3]] [ANGL156661 [DARL G1 22.000] [1
CHNL# 17: [ANGL199086 [TRENTON613.800] [6]] [ANGL156661 [DARL G1 22.000] [1
CHNL# 16: [ANGL199085 [TRENTN5 13.800] [5]] [ANGL156661 [DARL G1 22.000] [1
CHNL# 15: [ANGL199061 [TMP1 STO13.800] [1]] [ANGL156661 [DARL G1 22.000] [1
CHNL# 13: [ANGL199043 [ACONIG1 20.000] [1]] [ANGL156661 [DARL G1 22.000] [1
CHNL# 11: [ANGL199001 [LINGAN1 14.400] [1]] [ANGL156661 [DARL G1 22.000] [1
100.00
-100.0
50.000
-150.0
THU, JAN 29 2009 15:51
TIME (SECONDS)
NS ANGLE

2013 WINTER PEAK STORA MIN
NS-NB=0; NB-NE=500; CBX=732; ONI=961 ONS=851
3 PHASE FAULT ON L6503 AT TRENTON
CLEARED IN 6 CYCLES - RECLOSE ATTEMPT FROM ONSLOW
FILE: a103-L6503_3ph_1n_rect-2013WP-NS-0.out
CHNL# 10: [ANGL190472 [BLLDNG2 19.000] [1]] [ANGL156661 [DARL G1 22.000] [1
CHNL# 6: [ANGL190456 [LEPRG1 26.000] [1]] [ANGL156661 [DARL G1 22.000] [1
CHNL# 5: [ANGL190450 [MACTG1 13.800] [1]] [ANGL156661 [DARL G1 22.000] [1
CHNL# 3: [ANGL126652 [RAV 3 22.000] [1]] [ANGL156661 [DARL G1 22.000] [1
CHNL# 2: [ANGL101063 [MYST G7 22.000] [1]] [ANGL156661 [DARL G1 22.000] [1
CHNL# 7: [ANGL190457 [C.CVG1 19.000] [1]] [ANGL156661 [DARL G1 22.000] [1
100.00
-100.0
THU, JAN 29 2009 15:51
TIME (SECONDS)
"NE,NY,NB ANGLE"

2013 WINTER PEAK STORA MIN
NS-NB=0; NB-NE=500; CBX=732; ONI=961 ONS=851
3 PHASE FAULT ON L6503 AT TRENTON
CLEARED IN 6 CYCLES - RECLOSE ATTEMPT FROM ONSLOW
FILE: a103-L6503_3ph_1n_rect-2013WP-NS-0.out
CHNL# 59: [POWR199169 [TUFTCV3 14.400] [3]]
CHNL# 56: [POWR199086 [TRENTON613.800] [6]]
CHNL# 55: [POWR199085 [TRENTN5 13.800] [5]]
CHNL# 54: [POWR199061 [TMP1 STO13.800] [1]]
CHNL# 52: [POWR199043 [ACONIG1 20.000] [1]]
CHNL# 50: [POWR199001 [LINGAN1 14.400] [1]]
2.5000
0.0
-1.500
THU, JAN 29 2009 15:51
TIME (SECONDS)
NS MW

2013 WINTER PEAK STORA MIN
NS-NB=0; NB-NE=500; CBX=732; ONI=961 ONS=851
3 PHASE FAULT ON L6503 AT TRENTON
CLEARED IN 6 CYCLES - RECLOSE ATTEMPT FROM ONSLOW
FILE: a103-L6503_3ph_1n_rect-2013WP-NS-0.out
CHNL# 49: [POWER190472 [BLLDNG2 19.000] [1]]
CHNL# 45: [POWER190456 [LEPRG1 26.000] [1]]
CHNL# 44: [POWER190450 [MACTG1 13.800] [1]]
CHNL# 42: [POWER126652 [RAV 3 22.000] [1]]
CHNL# 41: [POWER101063 [MYST G7 22.000] [1]]
CHNL# 46: [POWER190457 [C.CVG1 19.000] [1]]
7.0000
2.0000
4.0000
0.0
1.0000
THU, JAN 29 2009 15:51
TIME (SECONDS)
"NE,NY,NB POWER"

2013 WINTER PEAK STORA MIN
NS-NB=0; NB-NE=500; CBX=732; ONI=961 ONS=851
3 PHASE FAULT ON L6503 AT TRENTON
CLEARED IN 6 CYCLES - RECLOSE ATTEMPT FROM ONSLOW
FILE: a103-L6503_3ph_1n_rect-2013WP-NS-0.out
CHNL# 119: [VARS IR141-DIGBY]
CHNL# 118: [VARS IR137-STATIA]
CHNL# 117: [VARS IR114-GLENDHU]
CHNL# 116: [VARS IR84-DALHOUSIE]
CHNL# 115: [VARS IR82_NUTTBY]
CHNL# 114: [VARS IR45_AMHERST]
0.50000
-0.5000
0.0
1.0000
TIME (SECONDS)
THU, JAN 29 2009 15:51
NS WIND MV

2013 WINTER PEAK STORA MIN
NS-NB=0; NB-NE=500; CBX=732; ONI=961 ONS=851
3 PHASE FAULT ON L6503 AT TRENTON
CLEARED IN 6 CYCLES - RECLOSE ATTEMPT FROM ONSLOW
FILE: a103-L6503_3ph_1n_rect-2013WP-NS-0.out
CHNL# 79: [POWER IR141-DIGBY]
CHNL# 78: [POWER IR137-STATIA]
CHNL# 77: [POWER IR114-GLENDHU]
CHNL# 76: [POWER IR84-DALHOUSIE]
CHNL# 75: [POWER IR82_NUTTBY]
CHNL# 74: [POWER IR45_AMHERST]
1.0000
0.0
TIME (SECONDS)
THU, JAN 29 2009 15:51
NS WIND MW

2013 WINTER PEAK STORA MIN
NS-NB=0; NB-NE=500; CBX=732; ONI=961 ONS=851
3 PHASE FAULT ON L6503 AT TRENTON
CLEARED IN 6 CYCLES - RECLOSE ATTEMPT FROM ONSLOW
FILE: a103-L6503_3ph_1n_rect-2013WP-NS-0.out
CHNL# 133: [VOLT199125 IONSLOW 345.00]
CHNL# 132: [VOLT199120 [HOPEWELL 345.00]
CHNL# 131: [VOLT199045 [WOODBINE345.00]]
CHNL# 130: [VOLT190320 [SALBRY 345.00]]
CHNL# 128: [VOLT190004 [KESWICK 345.00]]
CHNL# 127: [VOLT 70002 [ORRINGTN345.00]]
0.90000
1.1000
TIME (SECONDS)
THU, JAN 29 2009 15:51
"345KV VOLTAGE"

2013 WINTER PEAK STORA MIN
NS-NB=0; NB-NE=500; CBX=732; ONI=961 ONS=851
3 PHASE FAULT ON L6503 AT TRENTON
CLEARED IN 6 CYCLES - RECLOSE ATTEMPT FROM ONSLOW
FILE: a103-L6503_3ph_1n_rect-2013WP-NS-0.out
CHNL# 125: 60*(1+[FREQ199125 [ONSLOW 345.00]])
CHNL# 124: 60*(1+[FREQ199120 [HOPEWELL 345.00]])
CHNL# 123: 60*(1+[FREQ199045 [WOODBINE345.00]])
CHNL# 122: 60*(1+[FREQ190320 [SALBRY 345.00]])
CHNL# 121: 60*(1+[FREQ190197 [C.COVE 345.00]])
CHNL# 120: 60*(1+[FREQ 70002 [ORRINGTN345.00]])
60.500
59.500
TIME (SECONDS)
THU, JAN 29 2009 15:51
FREQUENCY HZ

2013 WINTER PEAK STORA MIN
NS-NB=0; NB-NE=500; CBX=732; ONI=961 ONS=851
3 PHASE FAULT ON L6503 AT TRENTON
CLEARED IN 6 CYCLES - RECLOSE ATTEMPT FROM ONSLOW
FILE: a103-L6503_3ph_1n_rect-2013WP-NS-0.out
CHNL# 146: [VOLT199280 [TUSKET A138.00]]
CHNL# 145: [VOLT199193 [HHWAS 138.00]]
CHNL# 144: [VOLT199165 [TUFTCOVE138.00]]
CHNL# 143: [VOLT199135 [SPRNGHILL138.00]]
CHNL# 142: [VOLT199090 [SON-TREN138.00]]
CHNL# 141: [VOLT199051 [HASTINGS138.00]]
1.2000
0.70000
0.0
1.0000
2.0000
3.0000
4.0000
5.0000
6.0000
7.0000
8.0000
9.0000
10.000
TIME (SECONDS)
THU, JAN 29 2009 15:51
138KV BUS VOLTS

2013 WINTER PEAK STORA MIN
NS-NB=0; NB-NE=500; CBX=732; ONI=961 ONS=851
3 PHASE FAULT ON L6503 AT TRENTON
CLEARED IN 6 CYCLES - RECLOSE ATTEMPT FROM ONSLOW
FILE: a103-L6503_3ph_1n_rect-2013WP-NS-0.out
CHNL# 140: [VOLT199240 [BWATER A230.00]]
CHNL# 139: [VOLT199200 [BRUSHY 230.00]]
CHNL# 138: [VOLT199130 [ONSLOW 230.00]]
CHNL# 137: [VOLT199050 [HASTINGS230.00]]
CHNL# 136: [VOLT199044 [PT.ACONI230.00]]
CHNL# 135: [VOLT199000 [LINGAN 230.00]]
1.2000
0.70000
0.0
1.0000
2.0000
3.0000
4.0000
5.0000
6.0000
7.0000
8.0000
9.0000
10.000
TIME (SECONDS)
THU, JAN 29 2009 15:51
230KV BUS VOLTS

2013 WINTER PEAK STORA MIN
NS-NB=0; NB-NE=500; CBX=732; ONI=961 ONS=851
3 PHASE FAULT ON L6503 AT TRENTON
CLEARED IN 6 CYCLES - RECLOSE ATTEMPT FROM ONSLOW
FILE: a103-L6503_3ph_1n_rect-2013WP-NS-0.out
CHNL# 217: [L6533MW]
CHNL# 215: [L6503MW]
CHNL# 197: [L8003MW]
CHNL# 195: [L8004MW]
CHNL# 193: [L8001MW]
CHNL# 221: [L3001MW]
250.00
-250.0
500.00
0.0
1000.0
-1000.
0.0
1.0000
2.0000
3.0000
4.0000
5.0000
6.0000
7.0000
8.0000
9.0000
10.000
TIME (SECONDS)
THU, JAN 29 2009 15:51
LINE FLOW MW

2013 WINTER PEAK STORA MIN
NS-NB=0; NB-NE=500; CBX=732; ONI=961 ONS=851
3 PHASE FAULT ON L6503 AT TRENTON
CLEARED IN 6 CYCLES - RECLOSE ATTEMPT FROM ONSLOW
FILE: a103-L6503_3ph_1n_rect-2013WP-NS-0.out
CHNL# 154: [IR141-DIGBYH69.0 VOLTS]
CHNL# 153: [IR137-STATIG25.0 VOLTS]
CHNL# 152: [IR114-GLENDH138.0 VOLTS]
CHNL# 151: [IR84-DALHOHV230.0 VOLTS]
CHNL# 150: [IR82_NUTBHV69.0 VOLTS]
CHNL# 149: [IR45_AMHERTP138.0 VOLTS]
1.2000
0.70000
0.0
1.0000
2.0000
3.0000
4.0000
5.0000
6.0000
7.0000
8.0000
9.0000
10.000
TIME (SECONDS)
THU, JAN 29 2009 15:51
WIND BUS VOLTS

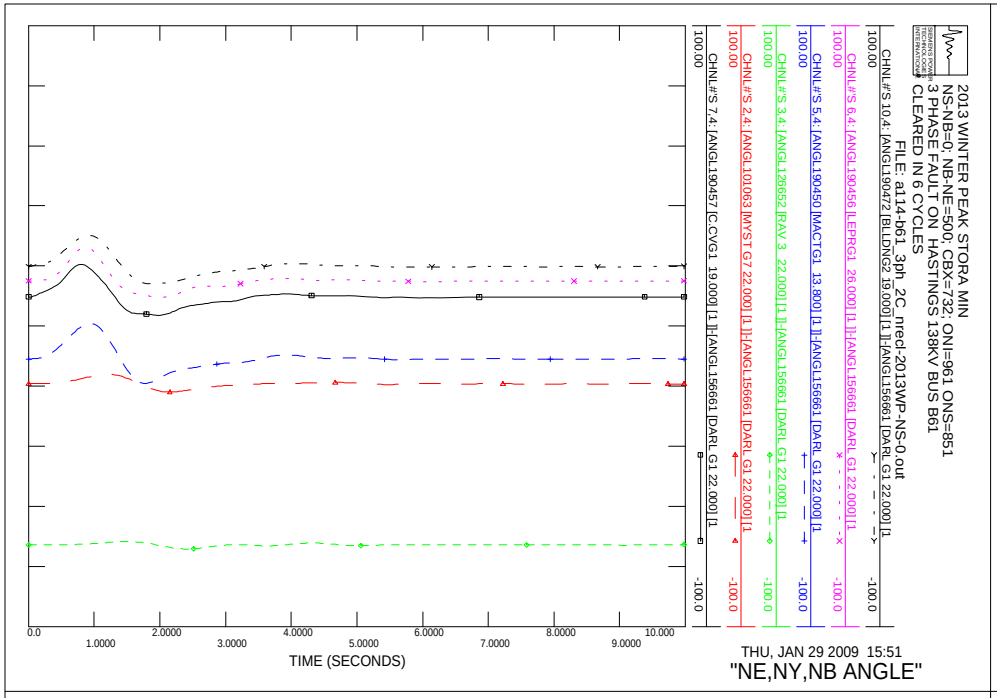
2013 WINTER PEAK STORA MIN
NS-NB=0; NB-NE=500; CBX=732; ONI=961 ONS=851
3 PHASE FAULT ON HASTINGS 138KV BUS B61
CLEARED IN 6 CYCLES
FILE: a114-b61_3ph_2C_nrecl-2013WP-NS-0.out
CHNL#S 10,4: [ANGL190472 [BLLDNG2 19.000] [1]]-[ANGL156661 [DARL G1 22.000] [1
CHNL#S 6,4: [ANGL190456 [LEPRG1 26.000] [1]]-[ANGL156661 [DARL G1 22.000] [1
CHNL#S 5,4: [ANGL190450 [MACTG1 13.800] [1]]-[ANGL156661 [DARL G1 22.000] [1
CHNL#S 3,4: [ANGL126652 [RAV 3 22.000] [1]]-[ANGL156661 [DARL G1 22.000] [1
CHNL#S 2,4: [ANGL101063 [MYST G7 22.000] [1]]-[ANGL156661 [DARL G1 22.000] [1
CHNL#S 7,4: [ANGL190457 [C.CVG1 19.000] [1]]-[ANGL156661 [DARL G1 22.000] [1
100.00
-100.0
TIME (SECONDS)
THU, JAN 29 2009 15:51
"NE,NY,NB ANGLE"

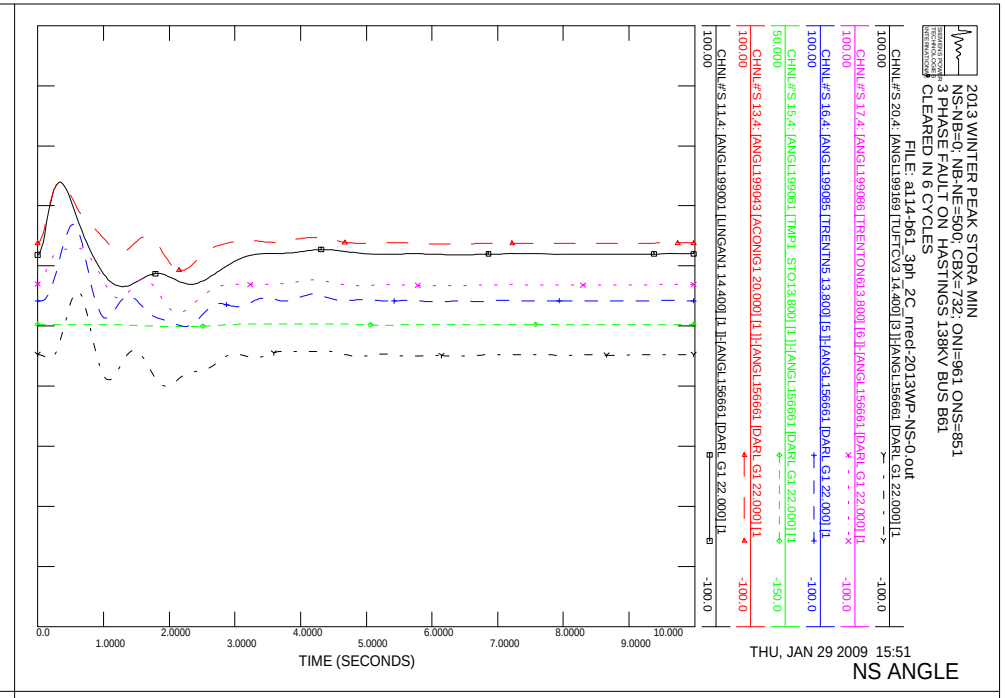
2013 WINTER PEAK STORA MIN
NS-NB=0; NB-NE=500; CBX=732; ONI=961 ONS=851
3 PHASE FAULT ON HASTINGS 138KV BUS B61
CLEARED IN 6 CYCLES
FILE: a114-b61_3ph_2C_nrecl-2013WP-NS-0.out
CHNL#S 20,4: [ANGL199169 [TUFTCV3 14.400] [3]]-[ANGL156661 [DARL G1 22.000] [1
CHNL#S 17,4: [ANGL199086 [TRENTON613.800] [6]]-[ANGL156661 [DARL G1 22.000] [1
CHNL#S 16,4: [ANGL199085 [TRENTN5 13.800] [5]]-[ANGL156661 [DARL G1 22.000] [1
CHNL#S 15,4: [ANGL199061 [TMP1 STO13.800] [1]]-[ANGL156661 [DARL G1 22.000] [1
CHNL#S 13,4: [ANGL199043 [ACONIG1 20.000] [1]]-[ANGL156661 [DARL G1 22.000] [1
CHNL#S 11,4: [ANGL199001 [LINGAN1 14.400] [1]]-[ANGL156661 [DARL G1 22.000] [1
100.00
-100.0
TIME (SECONDS)
THU, JAN 29 2009 15:51
NS ANGLE

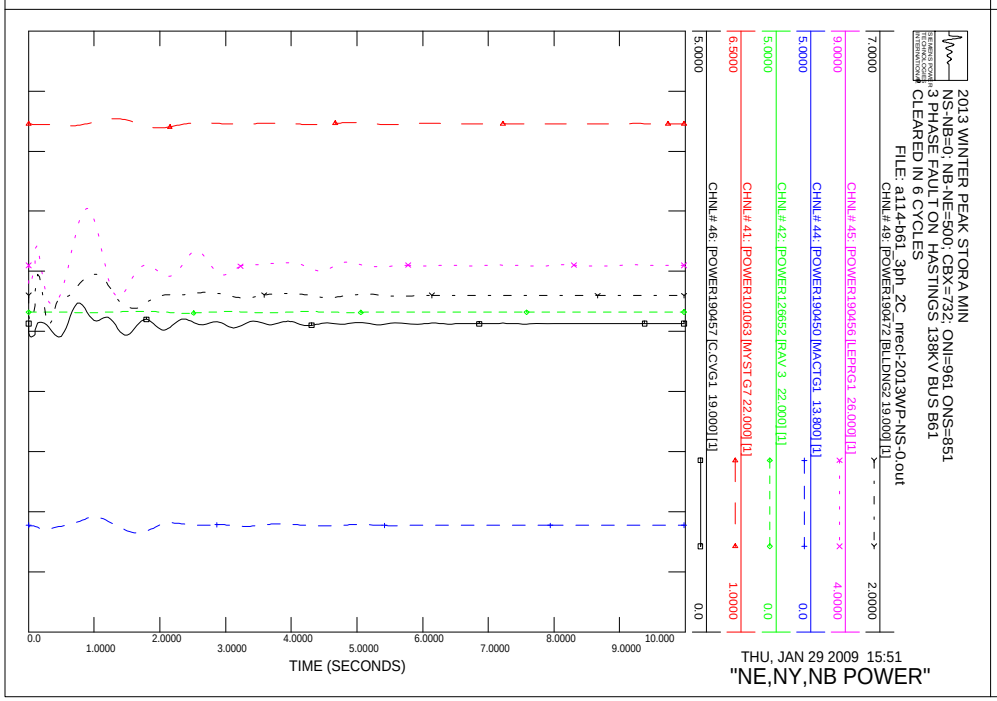
2013 WINTER PEAK STORA MIN
NS-NB=0; NB-NE=500; CBX=732; ONI=961 ONS=851
3 PHASE FAULT ON HASTINGS 138KV BUS B61
CLEARED IN 6 CYCLES
FILE: a114-b61_3ph_2C_nrecl-2013WP-NS-0.out
CHNL# 49: [POWER190472 [BLLDNG2 19.000] [1]
CHNL# 45: [POWER190456 [LEPRG1 26.000] [1]
CHNL# 44: [POWER190450 [MACTG1 13.800] [1]
CHNL# 42: [POWER126652 [RAV 3 22.000] [1]
CHNL# 41: [POWER101063 [MYST G7 22.000] [1]
CHNL# 46: [POWER190457 [C.CVG1 19.000] [1]
7.0000
2.0000
9.0000
4.0000
5.0000
0.0
6.5000
1.0000
5.0000
0.0
TIME (SECONDS)
THU, JAN 29 2009 15:51
"NE,NY,NB POWER"

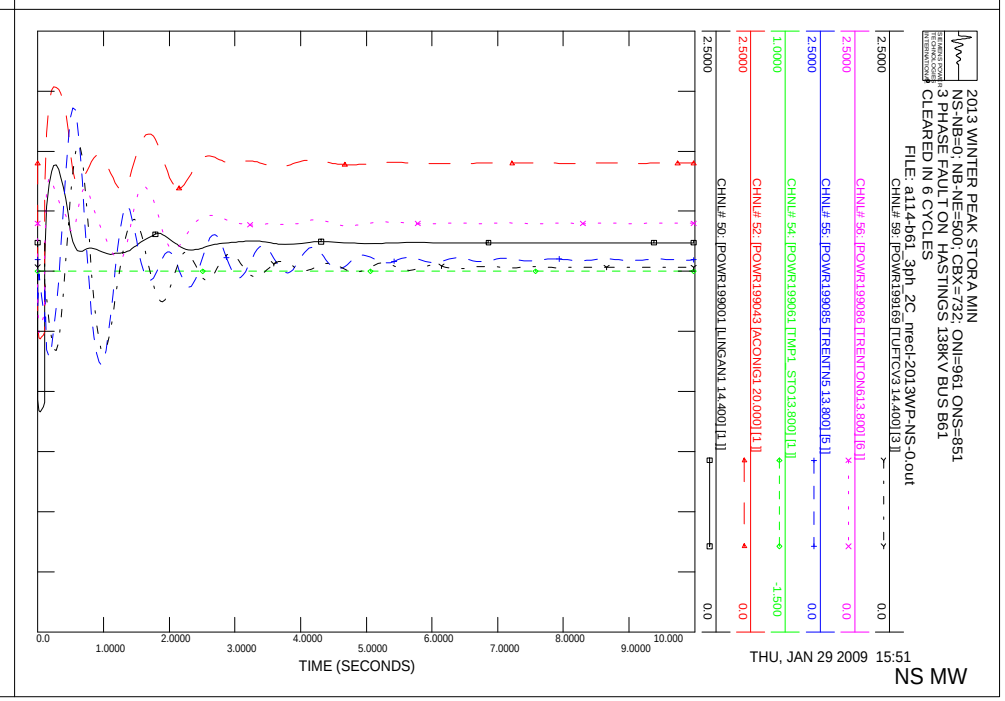
2013 WINTER PEAK STORA MIN
NS-NB=0; NB-NE=500; CBX=732; ONI=961 ONS=851
3 PHASE FAULT ON HASTINGS 138KV BUS B61
CLEARED IN 6 CYCLES
FILE: a114-b61_3ph_2C_nrecl-2013WP-NS-0.out
CHNL# 59: [POWR199169 [TUFTCV3 14.400] [3]]
CHNL# 56: [POWR199086 [TRENTON613.800] [6]]
CHNL# 55: [POWR199085 [TRENTN5 13.800] [5]]
CHNL# 54: [POWR199061 [TMP1 STO13.800] [1]]
CHNL# 52: [POWR199043 [ACONIG1 20.000] [1]]
CHNL# 50: [POWR199001 [LINGAN1 14.400] [1]]
2.5000
0.0
1.0000
-1.500
TIME (SECONDS)
THU, JAN 29 2009 15:51
NS MW

2013 WINTER PEAK STORA MIN
NS-NB=0; NB-NE=500; CBX=732; ONI=961 ONS=851
3 PHASE FAULT ON HASTINGS 138KV BUS B61
CLEARED IN 6 CYCLES
FILE: a14-b61_3ph_2C_nrecl-2013WP-NS-0.out
CHNL# 119: [VARS IR141-DIGBY]
CHNL# 118: [VARS IR137-STATIA]
CHNL# 117: [VARS IR114-GLENDHU]
CHNL# 116: [VARS IR84-DALHOUSIE]
CHNL# 115: [VARS IR82_NUTTBY]
CHNL# 114: [VARS IR45_AMHERST]
0.50000
-0.5000
TIME (SECONDS)
THU, JAN 29 2009 15:51
NS WIND MV

2013 WINTER PEAK STORA MIN
NS-NB=0; NB-NE=500; CBX=732; ONI=961 ONS=851
3 PHASE FAULT ON HASTINGS 138KV BUS B61
CLEARED IN 6 CYCLES
FILE: a14-b61_3ph_2C_nrecl-2013WP-NS-0.out
CHNL# 79: [POWER IR141-DIGBY]
CHNL# 78: [POWER IR137-STATIA]
CHNL# 77: [POWER IR114-GLENDHU]
CHNL# 76: [POWER IR84-DALHOUSIE]
CHNL# 75: [POWER IR82_NUTTBY]
CHNL# 74: [POWER IR45_AMHERST]
1.0000
0.0
TIME (SECONDS)
THU, JAN 29 2009 15:51
NS WIND MW

2013 WINTER PEAK STORA MIN
NS-NB=0; NB-NE=500; CBX=732; ONI=961 ONS=851
3 PHASE FAULT ON HASTINGS 138KV BUS B61
CLEARED IN 6 CYCLES
FILE: a14-b61_3ph_2C_nrecl-2013WP-NS-0.out
CHNL# 133: [VOLT199125 [ONSLOW 345.00]]
CHNL# 132: [VOLT199120 [HOPEWELL 345.00]]
CHNL# 131: [VOLT199045 [WOODBINE345.00]]
CHNL# 130: [VOLT190320 [SALBRY 345.00]]
CHNL# 128: [VOLT190004 [KESWICK 345.00]]
CHNL# 127: [VOLT 70002 [ORRINGTN345.00]]
1.1000
0.90000
TIME (SECONDS)
THU, JAN 29 2009 15:51
"345KV VOLTAGE"

2013 WINTER PEAK STORA MIN
NS-NB=0; NB-NE=500; CBX=732; ONI=961 ONS=851
3 PHASE FAULT ON HASTINGS 138KV BUS B61
CLEARED IN 6 CYCLES
FILE: a14-b61_3ph_2C_nrecl-2013WP-NS-0.out
CHNL# 125: 60*(1+[FREQ199125 [ONSLOW 345.00]])
CHNL# 124: 60*(1+[FREQ199120 [HOPEWELL 345.00]])
CHNL# 123: 60*(1+[FREQ199045 [WOODBINE345.00]])
CHNL# 122: 60*(1+[FREQ190320 [SALBRY 345.00]])
CHNL# 121: 60*(1+[FREQ190197 [C.COVE 345.00]])
CHNL# 120: 60*(1+[FREQ 70002 [ORRINGTN345.00]])
60.500
59.500
TIME (SECONDS)
THU, JAN 29 2009 15:51
FREQUENCY HZ

2013 WINTER PEAK STORA MIN
NS-NB=0; NB-NE=500; CBX=732; ONI=961 ONS=851
3 PHASE FAULT ON HASTINGS 138KV BUS B61
CLEARED IN 6 CYCLES
FILE: a14-b61_3ph_2C_nrecl-2013WP-NS-0.out
CHNL# 146: [VOLT199280 TUSKET A138.00]
CHNL# 145: [VOLT199193 [H-WAS 138.00]
CHNL# 144: [VOLT199165 [TUFTCOVE138.00]
CHNL# 143: [VOLT199138 [SPRNGHILL138.00]
CHNL# 142: [VOLT199090 [SON-TREN138.00]
CHNL# 141: [VOLT199051 [HASTINGS138.00]
1.2000
0.70000
0.0
1.0000
2.0000
3.0000
4.0000
5.0000
6.0000
7.0000
8.0000
9.0000
10.000
TIME (SECONDS)
THU, JAN 29 2009 15:51
138KV BUS VOLTS

2013 WINTER PEAK STORA MIN
NS-NB=0; NB-NE=500; CBX=732; ONI=961 ONS=851
3 PHASE FAULT ON HASTINGS 138KV BUS B61
CLEARED IN 6 CYCLES
FILE: a14-b61_3ph_2C_nrecl-2013WP-NS-0.out
CHNL# 140: [VOLT199240 [BWATER A230.00]
CHNL# 139: [VOLT199200 [BRUSHY 230.00]
CHNL# 138: [VOLT199130 [ONSLOW 230.00]
CHNL# 137: [VOLT199050 [HASTINGS230.00]
CHNL# 136: [VOLT199044 [PT.ACONI230.00]
CHNL# 135: [VOLT199000 [LINGAN 230.00]
1.2000
0.70000
0.0
1.0000
2.0000
3.0000
4.0000
5.0000
6.0000
7.0000
8.0000
9.0000
10.000
TIME (SECONDS)
THU, JAN 29 2009 15:51
230KV BUS VOLTS

2013 WINTER PEAK STORA MIN
NS-NB=0; NB-NE=500; CBX=732; ONI=961 ONS=851
3 PHASE FAULT ON HASTINGS 138KV BUS B61
CLEARED IN 6 CYCLES
FILE: a14-b61_3ph_2C_nrecl-2013WP-NS-0.out
CHNL# 217: [L6533MW]
CHNL# 215: [L6503MW]
CHNL# 197: [L8003MW]
CHNL# 195: [L8004MW]
CHNL# 193: [L8001MW]
CHNL# 221: [L3001MW]
250.00
-250.0
500.00
0.0
1000.0
-1000.
0.0
1.0000
2.0000
3.0000
4.0000
5.0000
6.0000
7.0000
8.0000
9.0000
10.000
TIME (SECONDS)
THU, JAN 29 2009 15:51
LINE FLOW MW

2013 WINTER PEAK STORA MIN
NS-NB=0; NB-NE=500; CBX=732; ONI=961 ONS=851
3 PHASE FAULT ON HASTINGS 138KV BUS B61
CLEARED IN 6 CYCLES
FILE: a14-b61_3ph_2C_nrecl-2013WP-NS-0.out
CHNL# 154: [IR141-DIGBYH69.0 VOLTS]
CHNL# 153: [IR137-STATIG25.0 VOLTS]
CHNL# 152: [IR114-GLENDH138.0 VOLTS]
CHNL# 151: [IR84-DALHOHV230.0 VOLTS]
CHNL# 150: [IR82_NUTBHV69.0 VOLTS]
CHNL# 149: [IR45_AMHERTP138.0 VOLTS]
1.2000
0.70000
0.0
1.0000
2.0000
3.0000
4.0000
5.0000
6.0000
7.0000
8.0000
9.0000
10.000
TIME (SECONDS)
THU, JAN 29 2009 15:51
WIND BUS VOLTS

2013 WINTER PEAK STORA MIN
NS-NB=0; NB-NE=500; CBX=732; ONI=961 ONS=851
3 PHASE FAULT ON HASTINGS 138KV BUS B62
CLEARED IN 6 CYCLES
FILE: a115-b62_3ph_2C_nrect-2013WP-NS-0.out
CHNL#S 20.4: [ANGL199169 [TUFTCV3 14.400] [3]] [ANGL156661 [DARL G1 22.000] [1
100.00
CHNL#S 17.4: [ANGL199086 [TRENTON613.800] [6]] [ANGL156661 [DARL G1 22.000] [1
100.00
-100.0
CHNL#S 16.4: [ANGL199085 [TRENTN5 13.800] [5]] [ANGL156661 [DARL G1 22.000] [1
100.00
-100.0
CHNL#S 15.4: [ANGL199061 [TMP1 STO13.800] [1]] [ANGL156661 [DARL G1 22.000] [1
50.000
-150.0
CHNL#S 13.4: [ANGL199043 [ACONIG1 20.000] [1]] [ANGL156661 [DARL G1 22.000] [1
100.00
-100.0
CHNL#S 11.4: [ANGL199001 [LINGAN1 14.400] [1]] [ANGL156661 [DARL G1 22.000] [1
100.00
-100.0
0.0
1.0000
2.0000
3.0000
4.0000
5.0000
6.0000
7.0000
8.0000
9.0000
10.000
TIME (SECONDS)
THU, JAN 29 2009 15:51
NS ANGLE

2013 WINTER PEAK STORA MIN
NS-NB=0; NB-NE=500; CBX=732; ONI=961 ONS=851
3 PHASE FAULT ON HASTINGS 138KV BUS B62
CLEARED IN 6 CYCLES
FILE: a115-b62_3ph_2C_nrect-2013WP-NS-0.out
CHNL#S 10.4: [ANGL190472 [BLLDNG2 19.000] [1]] [ANGL156661 [DARL G1 22.000] [1
100.00
-100.0
CHNL#S 6.4: [ANGL190456 [LEPRG1 26.000] [1]] [ANGL156661 [DARL G1 22.000] [1
100.00
-100.0
CHNL#S 5.4: [ANGL190450 [MACTG1 13.800] [1]] [ANGL156661 [DARL G1 22.000] [1
100.00
-100.0
CHNL#S 3.4: [ANGL126652 [RAV 3 22.000] [1]] [ANGL156661 [DARL G1 22.000] [1
100.00
-100.0
CHNL#S 2.4: [ANGL101063 [MYST G7 22.000] [1]] [ANGL156661 [DARL G1 22.000] [1
100.00
-100.0
CHNL#S 7.4: [ANGL190457 [C.CVG1 19.000] [1]] [ANGL156661 [DARL G1 22.000] [1
100.00
-100.0
0.0
1.0000
2.0000
3.0000
4.0000
5.0000
6.0000
7.0000
8.0000
9.0000
10.000
TIME (SECONDS)
THU, JAN 29 2009 15:51
"NE,NY,NB ANGLE"

2013 WINTER PEAK STORA MIN
NS-NB=0; NB-NE=500; CBX=732; ONI=961 ONS=851
3 PHASE FAULT ON HASTINGS 138KV BUS B62
CLEARED IN 6 CYCLES
FILE: a115-b62_3ph_2C_nrect-2013WP-NS-0.out
CHNL# 59: [POWER199169 [TUFTCV3 14.400] [3]]
2.5000
0.0
CHNL# 56: [POWER199086 [TRENTON613.800] [6]]
2.5000
0.0
CHNL# 55: [POWER199085 [TRENTN5 13.800] [5]]
2.5000
0.0
CHNL# 54: [POWER199061 [TMP1 STO13.800] [1]]
1.0000
-1.500
CHNL# 52: [POWER199043 [ACONIG1 20.000] [1]]
2.5000
0.0
CHNL# 50: [POWER199001 [LINGAN1 14.400] [1]]
2.5000
0.0
0.0
1.0000
2.0000
3.0000
4.0000
5.0000
6.0000
7.0000
8.0000
9.0000
10.000
TIME (SECONDS)
THU, JAN 29 2009 15:51
NS MW

2013 WINTER PEAK STORA MIN
NS-NB=0; NB-NE=500; CBX=732; ONI=961 ONS=851
3 PHASE FAULT ON HASTINGS 138KV BUS B62
CLEARED IN 6 CYCLES
FILE: a115-b62_3ph_2C_nrect-2013WP-NS-0.out
CHNL# 49: [POWER190472 [BLLDNG2 19.000] [1]]
7.0000
2.0000
CHNL# 45: [POWER190456 [LEPRG1 26.000] [1]]
9.0000
4.0000
CHNL# 44: [POWER190450 [MACTG1 13.800] [1]]
5.0000
0.0
CHNL# 42: [POWER126652 [RAV 3 22.000] [1]]
5.0000
0.0
CHNL# 41: [POWER101063 [MYST G7 22.000] [1]]
6.0000
1.0000
CHNL# 46: [POWER190457 [C.CVG1 19.000] [1]]
5.0000
0.0
0.0
1.0000
2.0000
3.0000
4.0000
5.0000
6.0000
7.0000
8.0000
9.0000
10.000
TIME (SECONDS)
THU, JAN 29 2009 15:51
"NE,NY,NB POWER"

2013 WINTER PEAK STORA MIN
NS-NB=0; NB-NE=500; CBX=732; ONI=961 ONS=851
3 PHASE FAULT ON HASTINGS 138KV BUS B62
CLEARED IN 6 CYCLES
FILE: a115-b62_3ph_2C_nrecl-2013WP-NS-0.out
CHNL# 119: [VARS IR141-DIGBY]
CHNL# 118: [VARS IR137-STATIA]
CHNL# 117: [VARS IR114-GLENDHU]
CHNL# 116: [VARS IR84-DALHOUSIE]
CHNL# 115: [VARS IR82_NUTTBY]
CHNL# 114: [VARS IR45_AMHERST]
TIME (SECONDS)
THU, JAN 29 2009 15:51
NS WIND MV

2013 WINTER PEAK STORA MIN
NS-NB=0; NB-NE=500; CBX=732; ONI=961 ONS=851
3 PHASE FAULT ON HASTINGS 138KV BUS B62
CLEARED IN 6 CYCLES
FILE: a115-b62_3ph_2C_nrecl-2013WP-NS-0.out
CHNL# 79: [POWER IR141-DIGBY]
CHNL# 78: [POWER IR137-STATIA]
CHNL# 77: [POWER IR114-GLENDHU]
CHNL# 76: [POWER IR84-DALHOUSIE]
CHNL# 75: [POWER IR82_NUTTBY]
CHNL# 74: [POWER IR45_AMHERST]
TIME (SECONDS)
THU, JAN 29 2009 15:51
NS WIND MW

2013 WINTER PEAK STORA MIN
NS-NB=0; NB-NE=500; CBX=732; ONI=961 ONS=851
3 PHASE FAULT ON HASTINGS 138KV BUS B62
CLEARED IN 6 CYCLES
FILE: a115-b62_3ph_2C_nrecl-2013WP-NS-0.out
CHNL# 133: [VOLT199125 [ONSLOW 345.00]]
CHNL# 132: [VOLT199120 [HOPEWELL 345.00]]
CHNL# 131: [VOLT199045 [WOODBINE345.00]]
CHNL# 130: [VOLT190320 [SALBRY 345.00]]
CHNL# 128: [VOLT190004 [KESWICK 345.00]]
CHNL# 127: [VOLT 70002 [ORRINGTN345.00]]
TIME (SECONDS)
THU, JAN 29 2009 15:51
"345KV VOLTAGE"

2013 WINTER PEAK STORA MIN
NS-NB=0; NB-NE=500; CBX=732; ONI=961 ONS=851
3 PHASE FAULT ON HASTINGS 138KV BUS B62
CLEARED IN 6 CYCLES
FILE: a115-b62_3ph_2C_nrecl-2013WP-NS-0.out
CHNL# 125: 60*(1+[FREQ199125 [ONSLOW 345.00]])
CHNL# 124: 60*(1+[FREQ199120 [HOPEWELL 345.00]])
CHNL# 123: 60*(1+[FREQ199045 [WOODBINE345.00]])
CHNL# 122: 60*(1+[FREQ190320 [SALBRY 345.00]])
CHNL# 121: 60*(1+[FREQ190197 [C.COVE 345.00]])
CHNL# 120: 60*(1+[FREQ 70002 [ORRINGTN345.00]])
TIME (SECONDS)
THU, JAN 29 2009 15:51
FREQUENCY HZ

2013 WINTER PEAK STORA MIN
NS-NB=0; NB-NE=500; CBX=732; ONI=961 ONS=851
3 PHASE FAULT ON HASTINGS 138KV BUS B62
CLEARED IN 6 CYCLES
FILE: a115-b62_3ph_2C_nrecl-2013WP-NS-0.out
CHNL# 146: [VOLT199280 [TUSKET A138.00]]
CHNL# 145: [VOLT199193 [HHWAS 138.00]]
CHNL# 144: [VOLT199165 [TUFTCOVE138.00]]
CHNL# 143: [VOLT199138 [SPRNGHILL138.00]]
CHNL# 142: [VOLT199090 [SON-TREN138.00]]
CHNL# 141: [VOLT199051 [HASTINGS138.00]]
1.2000
0.70000
0.0
1.0000
2.0000
3.0000
4.0000
5.0000
6.0000
7.0000
8.0000
9.0000
10.000
TIME (SECONDS)
THU, JAN 29 2009 15:51
138KV BUS VOLTS

2013 WINTER PEAK STORA MIN
NS-NB=0; NB-NE=500; CBX=732; ONI=961 ONS=851
3 PHASE FAULT ON HASTINGS 138KV BUS B62
CLEARED IN 6 CYCLES
FILE: a115-b62_3ph_2C_nrecl-2013WP-NS-0.out
CHNL# 140: [VOLT199240 [BWATER A230.00]]
CHNL# 139: [VOLT199200 [BRUSHY 230.00]]
CHNL# 138: [VOLT199130 [ONSLOW 230.00]]
CHNL# 137: [VOLT199050 [HASTINGS230.00]]
CHNL# 136: [VOLT199044 [PT.ACONI230.00]]
CHNL# 135: [VOLT199000 [LINGAN 230.00]]
1.2000
0.70000
0.0
1.0000
2.0000
3.0000
4.0000
5.0000
6.0000
7.0000
8.0000
9.0000
10.000
TIME (SECONDS)
THU, JAN 29 2009 15:51
230KV BUS VOLTS

2013 WINTER PEAK STORA MIN
NS-NB=0; NB-NE=500; CBX=732; ONI=961 ONS=851
3 PHASE FAULT ON HASTINGS 138KV BUS B62
CLEARED IN 6 CYCLES
FILE: a115-b62_3ph_2C_nrecl-2013WP-NS-0.out
CHNL# 217: [L6533MW]
CHNL# 215: [L6503MW]
CHNL# 197: [L8003MW]
CHNL# 195: [L8004MW]
CHNL# 193: [L8001MW]
CHNL# 221: [L3001MW]
250.00
-250.0
500.00
0.0
1000.0
-1000.
0.0
1.0000
2.0000
3.0000
4.0000
5.0000
6.0000
7.0000
8.0000
9.0000
10.000
TIME (SECONDS)
THU, JAN 29 2009 15:51
LINE FLOW MW

2013 WINTER PEAK STORA MIN
NS-NB=0; NB-NE=500; CBX=732; ONI=961 ONS=851
3 PHASE FAULT ON HASTINGS 138KV BUS B62
CLEARED IN 6 CYCLES
FILE: a115-b62_3ph_2C_nrecl-2013WP-NS-0.out
CHNL# 154: [IR141-DIGBYH69.0 VOLTS]
CHNL# 153: [IR137-STATIG25.0 VOLTS]
CHNL# 152: [IR114-GLENDH138.0 VOLTS]
CHNL# 151: [IR84-DALHOHV230.0 VOLTS]
CHNL# 150: [IR82_NUTBHV69.0 VOLTS]
CHNL# 149: [IR45_AMHERTP138.0 VOLTS]
1.2000
0.70000
0.0
1.0000
2.0000
3.0000
4.0000
5.0000
6.0000
7.0000
8.0000
9.0000
10.000
TIME (SECONDS)
THU, JAN 29 2009 15:51
WIND BUS VOLTS

2013 WINTER PEAK STORA MIN
NS-NB=0; NB-NE=500; CBX=732; ONI=961 ONS=851
3 PHASE FAULT ON L6014 AT TUFT'S COVE
CLEARED IN 6 CYCLES RECLOSING ATTEMPT FROM 91H IN 10 SEC
FILE: a116-l6014_91H_3ph_recl-2013WP-NS-0.out
CHNL#'S 20:4 [ANGL199169 [TUFTCV3 14.400] [3]] [ANGL156661 [DARL G1 22.000] [1
CHNL#'S 17:4 [ANGL199086 [TRENTON613.800] [6]] [ANGL156661 [DARL G1 22.000] [1
CHNL#'S 16:4 [ANGL199085 [TRENTN5 13.800] [5]] [ANGL156661 [DARL G1 22.000] [1
CHNL#'S 15:4 [ANGL199061 [TMP1 STO13.800] [1]] [ANGL156661 [DARL G1 22.000] [1
CHNL#'S 13:4 [ANGL199043 [ACONIG1 20.000] [1]] [ANGL156661 [DARL G1 22.000] [1
CHNL#'S 11:4 [ANGL199001 [LINGAN1 14.400] [1]] [ANGL156661 [DARL G1 22.000] [1
100.00
-100.0
50.000
-150.0
0.0
1.0000
2.0000
3.0000
4.0000
5.0000
6.0000
7.0000
8.0000
9.0000
10.000
TIME (SECONDS)
THU, JAN 29 2009 15:51
NS ANGLE

2013 WINTER PEAK STORA MIN
NS-NB=0; NB-NE=500; CBX=732; ONI=961 ONS=851
3 PHASE FAULT ON L6014 AT TUFT'S COVE
CLEARED IN 6 CYCLES RECLOSING ATTEMPT FROM 91H IN 10 SEC
FILE: a116-l6014_91H_3ph_recl-2013WP-NS-0.out
CHNL#'S 10:4 [ANGL190472 [BLLDNG2 19.000] [1]] [ANGL156661 [DARL G1 22.000] [1
CHNL#'S 6:4 [ANGL190456 [LEPRG1 26.000] [1]] [ANGL156661 [DARL G1 22.000] [1
CHNL#'S 5:4 [ANGL190450 [MACTG1 13.800] [1]] [ANGL156661 [DARL G1 22.000] [1
CHNL#'S 3:4 [ANGL126652 [RAV 3 22.000] [1]] [ANGL156661 [DARL G1 22.000] [1
CHNL#'S 2:4 [ANGL101063 [MYST G7 22.000] [1]] [ANGL156661 [DARL G1 22.000] [1
CHNL#'S 7:4 [ANGL190457 [C.CVG1 19.000] [1]] [ANGL156661 [DARL G1 22.000] [1
100.00
-100.0
0.0
1.0000
2.0000
3.0000
4.0000
5.0000
6.0000
7.0000
8.0000
9.0000
10.000
TIME (SECONDS)
THU, JAN 29 2009 15:51
"NE,NY,NB ANGLE"

2013 WINTER PEAK STORA MIN
NS-NB=0; NB-NE=500; CBX=732; ONI=961 ONS=851
3 PHASE FAULT ON L6014 AT TUFT'S COVE
CLEARED IN 6 CYCLES RECLOSING ATTEMPT FROM 91H IN 10 SEC
FILE: a116-l6014_91H_3ph_recl-2013WP-NS-0.out
CHNL#: 59: [POWER199169 [TUFTCV3 14.400] [3]]
CHNL#: 56: [POWER199086 [TRENTON613.800] [6]]
CHNL#: 55: [POWER199085 [TRENTN5 13.800] [5]]
CHNL#: 54: [POWER199061 [TMP1 STO13.800] [1]]
CHNL#: 52: [POWER199043 [ACONIG1 20.000] [1]]
CHNL#: 50: [POWER199001 [LINGAN1 14.400] [1]]
2.5000
0.0
1.0000
-1.500
0.0
1.0000
2.0000
3.0000
4.0000
5.0000
6.0000
7.0000
8.0000
9.0000
10.000
TIME (SECONDS)
THU, JAN 29 2009 15:51
NS MW

2013 WINTER PEAK STORA MIN
NS-NB=0; NB-NE=500; CBX=732; ONI=961 ONS=851
3 PHASE FAULT ON L6014 AT TUFT'S COVE
CLEARED IN 6 CYCLES RECLOSING ATTEMPT FROM 91H IN 10 SEC
FILE: a116-l6014_91H_3ph_recl-2013WP-NS-0.out
CHNL# 49: [POWER190472 [BLLDNG2 19.000] [1]]
CHNL# 45: [POWER190456 [LEPRG1 26.000] [1]]
CHNL# 44: [POWER190450 [MACTG1 13.800] [1]]
CHNL# 42: [POWER126652 [RAV 3 22.000] [1]]
CHNL# 41: [POWER101063 [MYST G7 22.000] [1]]
CHNL# 46: [POWER190457 [C.CVG1 19.000] [1]]
7.0000
2.0000
9.0000
4.0000
5.0000
0.0
5.0000
0.0
6.5000
1.0000
5.0000
0.0
1.0000
2.0000
3.0000
4.0000
5.0000
6.0000
7.0000
8.0000
9.0000
10.000
TIME (SECONDS)
THU, JAN 29 2009 15:51
"NE,NY,NB POWER"

2013 WINTER PEAK STORA MIN
NS-NB=0; NB-NE=500; CBX=732; ONI=961 ONS=851
3 PHASE FAULT ON L6014 AT TUFT'S COVE
CLEARED IN 6 CYCLES RECLOSING ATTEMPT FROM 91H IN 10 SEC
FILE: a116-l6014_91H_3ph_recl-2013WP-NS-0.out
CHNL# 119: [VARS IR141-DIGBY]
CHNL# 118: [VARS IR137-STATIA]
CHNL# 117: [VARS IR114-GLENDHU]
CHNL# 116: [VARS IR84-DALHOUSIE]
CHNL# 115: [VARS IR82_NUTTBY]
CHNL# 114: [VARS IR45_AMHERST]
0.50000
-0.5000
0.0
1.0000
2.0000
3.0000
4.0000
5.0000
6.0000
7.0000
8.0000
9.0000
10.000
TIME (SECONDS)
THU, JAN 29 2009 15:51
NS WIND MV

2013 WINTER PEAK STORA MIN
NS-NB=0; NB-NE=500; CBX=732; ONI=961 ONS=851
3 PHASE FAULT ON L6014 AT TUFT'S COVE
CLEARED IN 6 CYCLES RECLOSING ATTEMPT FROM 91H IN 10 SEC
FILE: a116-l6014_91H_3ph_recl-2013WP-NS-0.out
CHNL# 79: [POWER IR141-DIGBY]
CHNL# 78: [POWER IR137-STATIA]
CHNL# 77: [POWER IR114-GLENDHU]
CHNL# 76: [POWER IR84-DALHOUSIE]
CHNL# 75: [POWER IR82_NUTTBY]
CHNL# 74: [POWER IR45_AMHERST]
1.0000
0.0
0.0
1.0000
2.0000
3.0000
4.0000
5.0000
6.0000
7.0000
8.0000
9.0000
10.000
TIME (SECONDS)
THU, JAN 29 2009 15:51
NS WIND MW

2013 WINTER PEAK STORA MIN
NS-NB=0; NB-NE=500; CBX=732; ONI=961 ONS=851
3 PHASE FAULT ON L6014 AT TUFT'S COVE
CLEARED IN 6 CYCLES RECLOSING ATTEMPT FROM 91H IN 10 SEC
FILE: a116-l6014_91H_3ph_recl-2013WP-NS-0.out
CHNL# 133: [VOLT199125 [ONSLOW 345.00]]
CHNL# 132: [VOLT199120 [HOPEWELL 345.00]]
CHNL# 131: [VOLT199045 [WOODBINE345.00]]
CHNL# 130: [VOLT190320 [SALBRY 345.00]]
CHNL# 128: [VOLT190004 [KESWICK 345.00]]
CHNL# 127: [VOLT 70002 [ORRINGTN345.00]]
1.1000
0.90000
0.0
1.0000
2.0000
3.0000
4.0000
5.0000
6.0000
7.0000
8.0000
9.0000
10.000
TIME (SECONDS)
THU, JAN 29 2009 15:51
"345KV VOLTAGE"

2013 WINTER PEAK STORA MIN
NS-NB=0; NB-NE=500; CBX=732; ONI=961 ONS=851
3 PHASE FAULT ON L6014 AT TUFT'S COVE
CLEARED IN 6 CYCLES RECLOSING ATTEMPT FROM 91H IN 10 SEC
FILE: a116-l6014_91H_3ph_recl-2013WP-NS-0.out
CHNL# 125: 60*(1+[FREQ199125 [ONSLOW 345.00]])
CHNL# 124: 60*(1+[FREQ199120 [HOPEWELL 345.00]])
CHNL# 123: 60*(1+[FREQ199045 [WOODBINE345.00]])
CHNL# 122: 60*(1+[FREQ190320 [SALBRY 345.00]])
CHNL# 121: 60*(1+[FREQ190197 [C.COVE 345.00]])
CHNL# 120: 60*(1+[FREQ 70002 [ORRINGTN345.00]])
60.500
59.500
0.0
1.0000
2.0000
3.0000
4.0000
5.0000
6.0000
7.0000
8.0000
9.0000
10.000
TIME (SECONDS)
THU, JAN 29 2009 15:51
FREQUENCY HZ

2013 WINTER PEAK STORA MIN
NS-NB=0; NB-NE=500; CBX=732; ONI=961 ONS=851
3 PHASE FAULT ON L6014 AT TUFT'S COVE
CLEARED IN 6 CYCLES RECLOSING ATTEMPT FROM 91H IN 10 SEC
FILE: a116-l6014_91H_3ph_recl-2013WP-NS-0.out
CHNL# 146: [VOLT199280 [TUSKET A138.00]] 1.2000 0.70000
CHNL# 145: [VOLT199193 [1H-WAS 138.00]] 1.2000 0.70000
CHNL# 144: [VOLT199165 [TUFT COVE138.00]] 1.2000 0.70000
CHNL# 143: [VOLT199138 [SPRNGHILL138.00]] 1.2000 0.70000
CHNL# 142: [VOLT199090 [SON-TREN138.00]] 1.2000 0.70000
CHNL# 141: [VOLT199051 [HASTINGS138.00]] 1.2000 0.70000
0.0 1.0000 2.0000 3.0000 4.0000 5.0000 6.0000 7.0000 8.0000 9.0000 10.000
TIME (SECONDS)
THU, JAN 29 2009 15:51
138KV BUS VOLTS

2013 WINTER PEAK STORA MIN
NS-NB=0; NB-NE=500; CBX=732; ONI=961 ONS=851
3 PHASE FAULT ON L6014 AT TUFT'S COVE
CLEARED IN 6 CYCLES RECLOSING ATTEMPT FROM 91H IN 10 SEC
FILE: a116-l6014_91H_3ph_recl-2013WP-NS-0.out
CHNL# 140: [VOLT199240 [BWATER A230.00]] 1.2000 0.70000
CHNL# 139: [VOLT199200 [BRUSHY 230.00]] 1.2000 0.70000
CHNL# 138: [VOLT199130 [ONSLOW 230.00]] 1.2000 0.70000
CHNL# 137: [VOLT199050 [HASTINGS230.00]] 1.2000 0.70000
CHNL# 136: [VOLT199044 [PT.ACONI230.00]] 1.2000 0.70000
CHNL# 135: [VOLT199000 [LINGAN 230.00]] 1.2000 0.70000
0.0 1.0000 2.0000 3.0000 4.0000 5.0000 6.0000 7.0000 8.0000 9.0000 10.000
TIME (SECONDS)
THU, JAN 29 2009 15:51
230KV BUS VOLTS

2013 WINTER PEAK STORA MIN
NS-NB=0; NB-NE=500; CBX=732; ONI=961 ONS=851
3 PHASE FAULT ON L6014 AT TUFT'S COVE
CLEARED IN 6 CYCLES RECLOSING ATTEMPT FROM 91H IN 10 SEC
FILE: a116-l6014_91H_3ph_recl-2013WP-NS-0.out
CHNL# 217: [L6513MW] 250.00 -250.0
CHNL# 215: [L6503MW] 500.00 0.0
CHNL# 197: [L8003MW] 1000.0 0.0
CHNL# 195: [L8004MW] 500.00 0.0
CHNL# 193: [L8001MW] 1000.0 -1000.
CHNL# 221: [L3001MW] 1000.0 -1000.
0.0 1.0000 2.0000 3.0000 4.0000 5.0000 6.0000 7.0000 8.0000 9.0000 10.000
TIME (SECONDS)
THU, JAN 29 2009 15:51
LINE FLOW MW

2013 WINTER PEAK STORA MIN
NS-NB=0; NB-NE=500; CBX=732; ONI=961 ONS=851
3 PHASE FAULT ON L6014 AT TUFT'S COVE
CLEARED IN 6 CYCLES RECLOSING ATTEMPT FROM 91H IN 10 SEC
FILE: a116-l6014_91H_3ph_recl-2013WP-NS-0.out
CHNL# 154: [IR141-DIGBYH69.0 VOLTS] 1.2000 0.70000
CHNL# 153: [IR137-STATIG25.0 VOLTS] 1.2000 0.70000
CHNL# 152: [IR114-GLENDH138.0 VOLTS] 1.2000 0.70000
CHNL# 151: [IR84-DALHOHV230.0 VOLTS] 1.2000 0.70000
CHNL# 150: [IR82-NUTBHV69.0 VOLTS] 1.2000 0.70000
CHNL# 149: [IR45-AMHERTP138.0 VOLTS] 1.2000 0.70000
0.0 1.0000 2.0000 3.0000 4.0000 5.0000 6.0000 7.0000 8.0000 9.0000 10.000
TIME (SECONDS)
THU, JAN 29 2009 15:51
WIND BUS VOLTS

2013 WINTER PEAK STORA MIN
NS-NB=0; NB-NE=500; CBX=732; ONI=961 ONS=851
3 PHASE FAULT ON L6014 AT TUFT'S COVE PRIMARY PROTECTION FA
CLEARED IN 6 CYCLES RECLOSING ATTEMPT FROM 91H IN 10 SEC
FILE: a116F-I6014_91H_3ph_recl-2013WP-NS-0.out
CHNL#'S 20.4: [ANGL199169 [TUFTCV3 14.400] [3]] [ANGL156661 [DARL G1 22.000] [1]
100.00
-100.0
CHNL#'S 17.4: [ANGL199086 [TRENTON613.800] [6]] [ANGL156661 [DARL G1 22.000] [1]
100.00
-100.0
CHNL#'S 16.4: [ANGL199085 [TRENTN5 13.800] [5]] [ANGL156661 [DARL G1 22.000] [1]
100.00
-100.0
CHNL#'S 15.4: [ANGL199061 [TMP1 STO13.800] [1]] [ANGL156661 [DARL G1 22.000] [1]
50.000
-150.0
CHNL#'S 13.4: [ANGL199043 [ACONIG1 20.000] [1]] [ANGL156661 [DARL G1 22.000] [1]
100.00
-100.0
CHNL#'S 11.4: [ANGL199001 [LINGAN1 14.400] [1]] [ANGL156661 [DARL G1 22.000] [1]
100.00
-100.0
0.0
1.0000
2.0000
3.0000
4.0000
5.0000
6.0000
7.0000
8.0000
9.0000
10.000
TIME (SECONDS)
THU, JAN 29 2009 15:51
NS ANGLE

2013 WINTER PEAK STORA MIN
NS-NB=0; NB-NE=500; CBX=732; ONI=961 ONS=851
3 PHASE FAULT ON L6014 AT TUFT'S COVE PRIMARY PROTECTION FA
CLEARED IN 6 CYCLES RECLOSING ATTEMPT FROM 91H IN 10 SEC
FILE: a116F-I6014_91H_3ph_recl-2013WP-NS-0.out
CHNL#'S 10.4: [ANGL190472 [BLLDNG2 19.000] [1]] [ANGL156661 [DARL G1 22.000] [1]
100.00
-100.0
CHNL#'S 6.4: [ANGL190456 [LEPRG1 26.000] [1]] [ANGL156661 [DARL G1 22.000] [1]
100.00
-100.0
CHNL#'S 5.4: [ANGL190450 [MACTG1 13.800] [1]] [ANGL156661 [DARL G1 22.000] [1]
100.00
-100.0
CHNL#'S 3.4: [ANGL126652 [RAV 3 22.000] [1]] [ANGL156661 [DARL G1 22.000] [1]
100.00
-100.0
CHNL#'S 2.4: [ANGL101063 [MYST G7 22.000] [1]] [ANGL156661 [DARL G1 22.000] [1]
100.00
-100.0
CHNL#'S 7.4: [ANGL190457 [C.CVG1 19.000] [1]] [ANGL156661 [DARL G1 22.000] [1]
100.00
-100.0
0.0
1.0000
2.0000
3.0000
4.0000
5.0000
6.0000
7.0000
8.0000
9.0000
10.000
TIME (SECONDS)
THU, JAN 29 2009 15:51
"NE,NY,NB ANGLE"

2013 WINTER PEAK STORA MIN
NS-NB=0; NB-NE=500; CBX=732; ONI=961 ONS=851
3 PHASE FAULT ON L6014 AT TUFT'S COVE PRIMARY PROTECTION FA
CLEARED IN 6 CYCLES RECLOSING ATTEMPT FROM 91H IN 10 SEC
FILE: a116F-I6014_91H_3ph_recl-2013WP-NS-0.out
CHNL# 59: [POWER199169 [TUFTCV3 14.400] [3]]
2.5000
0.0
CHNL# 56: [POWER199086 [TRENTON613.800] [6]]
2.5000
0.0
CHNL# 55: [POWER199085 [TRENTN5 13.800] [5]]
2.5000
0.0
CHNL# 54: [POWER199061 [TMP1 STO13.800] [1]]
1.0000
-1.500
CHNL# 52: [POWER199043 [ACONIG1 20.000] [1]]
2.5000
0.0
CHNL# 50: [POWER199001 [LINGAN1 14.400] [1]]
2.5000
0.0
0.0
1.0000
2.0000
3.0000
4.0000
5.0000
6.0000
7.0000
8.0000
9.0000
10.000
TIME (SECONDS)
THU, JAN 29 2009 15:51
NS MW

2013 WINTER PEAK STORA MIN
NS-NB=0; NB-NE=500; CBX=732; ONI=961 ONS=851
3 PHASE FAULT ON L6014 AT TUFT'S COVE PRIMARY PROTECTION FA
CLEARED IN 6 CYCLES RECLOSING ATTEMPT FROM 91H IN 10 SEC
FILE: a116F-I6014_91H_3ph_recl-2013WP-NS-0.out
CHNL# 49: [POWER190472 [BLLDNG2 19.000] [1]]
7.0000
2.0000
CHNL# 45: [POWER190456 [LEPRG1 26.000] [1]]
9.0000
4.0000
CHNL# 44: [POWER190450 [MACTG1 13.800] [1]]
5.0000
0.0
CHNL# 42: [POWER126652 [RAV 3 22.000] [1]]
5.0000
0.0
CHNL# 41: [POWER101063 [MYST G7 22.000] [1]]
6.5000
1.0000
CHNL# 46: [POWER190457 [C.CVG1 19.000] [1]]
5.0000
0.0
0.0
1.0000
2.0000
3.0000
4.0000
5.0000
6.0000
7.0000
8.0000
9.0000
10.000
TIME (SECONDS)
THU, JAN 29 2009 15:51
"NE,NY,NB POWER"

2013 WINTER PEAK STORA MIN
NS-NB=0; NB-NE=500; CBX=732; ONI=961 ONS=851
3 PHASE FAULT ON L6014 AT TUFT'S COVE PRIMARY PROTECTION FA
CLEARED IN 6 CYCLES RECLOSING ATTEMPT FROM 91H IN 10 SEC
FILE: a116F-I6014_91H_3ph_recl-2013WP-NS-0.out
CHNL# 119: [VARS IR141-DIGBY]
CHNL# 118: [VARS IR137-STATIA]
CHNL# 117: [VARS IR114-GLENDHU]
CHNL# 116: [VARS IR84-DALHOUSIE]
CHNL# 115: [VARS IR82_NUTTBY]
CHNL# 114: [VARS IR45_AMHERST]
TIME (SECONDS)
THU, JAN 29 2009 15:51
NS WIND MV

2013 WINTER PEAK STORA MIN
NS-NB=0; NB-NE=500; CBX=732; ONI=961 ONS=851
3 PHASE FAULT ON L6014 AT TUFT'S COVE PRIMARY PROTECTION FA
CLEARED IN 6 CYCLES RECLOSING ATTEMPT FROM 91H IN 10 SEC
FILE: a116F-I6014_91H_3ph_recl-2013WP-NS-0.out
CHNL# 79: [POWER IR141-DIGBY]
CHNL# 78: [POWER IR137-STATIA]
CHNL# 77: [POWER IR114-GLENDHU]
CHNL# 76: [POWER IR84-DALHOUSIE]
CHNL# 75: [POWER IR82_NUTTBY]
CHNL# 74: [POWER IR45_AMHERST]
TIME (SECONDS)
THU, JAN 29 2009 15:51
NS WIND MW

2013 WINTER PEAK STORA MIN
NS-NB=0; NB-NE=500; CBX=732; ONI=961 ONS=851
3 PHASE FAULT ON L6014 AT TUFT'S COVE PRIMARY PROTECTION FA
CLEARED IN 6 CYCLES RECLOSING ATTEMPT FROM 91H IN 10 SEC
FILE: a116F-I6014_91H_3ph_recl-2013WP-NS-0.out
CHNL# 133: [VOLT199125 IONSLOW 345.00]
CHNL# 132: [VOLT199120 [HOPEWELL 345.00]
CHNL# 131: [VOLT199045 [WOODBINE345.00]
CHNL# 130: [VOLT190320 [SALBRY 345.00]
CHNL# 128: [VOLT190004 [KESWICK 345.00]
CHNL# 127: [VOLT 70002 [ORRINGTN345.00]
TIME (SECONDS)
THU, JAN 29 2009 15:51
"345KV VOLTAGE"

2013 WINTER PEAK STORA MIN
NS-NB=0; NB-NE=500; CBX=732; ONI=961 ONS=851
3 PHASE FAULT ON L6014 AT TUFT'S COVE PRIMARY PROTECTION FA
CLEARED IN 6 CYCLES RECLOSING ATTEMPT FROM 91H IN 10 SEC
FILE: a116F-I6014_91H_3ph_recl-2013WP-NS-0.out
CHNL# 125: 60*(1+[FREQ199125 IONSLOW 345.00])
CHNL# 124: 60*(1+[FREQ199120 [HOPEWELL 345.00])
CHNL# 123: 60*(1+[FREQ199045 [WOODBINE345.00])
CHNL# 122: 60*(1+[FREQ190320 [SALBRY 345.00])
CHNL# 121: 60*(1+[FREQ190197 [C.COVE 345.00])
CHNL# 120: 60*(1+[FREQ 70002 [ORRINGTN345.00])
TIME (SECONDS)
THU, JAN 29 2009 15:51
FREQUENCY HZ

2013 WINTER PEAK STORA MIN
NS-NB=0; NB-NE=500; CBX=732; ONI=961 ONS=851
3 PHASE FAULT ON L6014 AT TUFT'S COVE PRIMARY PROTECTION FA
CLEARED IN 6 CYCLES RECLOSING ATTEMPT FROM 91H IN 10 SEC
FILE: a116F-l6014_91H_3ph_recl-2013WP-NS-0.out
CHNL# 146: [VOLT199280 [TUSKET A138.00]]
CHNL# 145: [VOLT199193 [LH-WAS 138.00]]
CHNL# 144: [VOLT199165 [TUFT COVE138.00]]
CHNL# 143: [VOLT199135 [SPRNGHILL138.00]]
CHNL# 142: [VOLT199090 [50N-TREN138.00]]
CHNL# 141: [VOLT199051 [HASTINGS138.00]]
1.2000
0.70000
0.0
1.0000
2.0000
3.0000
4.0000
5.0000
6.0000
7.0000
8.0000
9.0000
10.000
TIME (SECONDS)
THU, JAN 29 2009 15:51
138KV BUS VOLTS

2013 WINTER PEAK STORA MIN
NS-NB=0; NB-NE=500; CBX=732; ONI=961 ONS=851
3 PHASE FAULT ON L6014 AT TUFT'S COVE PRIMARY PROTECTION FA
CLEARED IN 6 CYCLES RECLOSING ATTEMPT FROM 91H IN 10 SEC
FILE: a116F-l6014_91H_3ph_recl-2013WP-NS-0.out
CHNL# 140: [VOLT199240 [BWATER A230.00]]
CHNL# 139: [VOLT199200 [BRUSHY 230.00]]
CHNL# 138: [VOLT199130 [ONSLOW 230.00]]
CHNL# 137: [VOLT199050 [HASTINGS230.00]]
CHNL# 136: [VOLT199044 [PT.ACONI230.00]]
CHNL# 135: [VOLT199000 [LINGAN 230.00]]
1.2000
0.70000
0.0
1.0000
2.0000
3.0000
4.0000
5.0000
6.0000
7.0000
8.0000
9.0000
10.000
TIME (SECONDS)
THU, JAN 29 2009 15:51
230KV BUS VOLTS

2013 WINTER PEAK STORA MIN
NS-NB=0; NB-NE=500; CBX=732; ONI=961 ONS=851
3 PHASE FAULT ON L6014 AT TUFT'S COVE PRIMARY PROTECTION FA
CLEARED IN 6 CYCLES RECLOSING ATTEMPT FROM 91H IN 10 SEC
FILE: a116F-l6014_91H_3ph_recl-2013WP-NS-0.out
CHNL# 217: [L6533MW]
CHNL# 215: [L6503MW]
CHNL# 197: [L8003MW]
CHNL# 195: [L8004MW]
CHNL# 193: [L8001MW]
CHNL# 221: [L3001MW]
250.00
500.00
1000.0
0.0
-250.0
-1000.
0.0
1.0000
2.0000
3.0000
4.0000
5.0000
6.0000
7.0000
8.0000
9.0000
10.000
TIME (SECONDS)
THU, JAN 29 2009 15:51
LINE FLOW MW

2013 WINTER PEAK STORA MIN
NS-NB=0; NB-NE=500; CBX=732; ONI=961 ONS=851
3 PHASE FAULT ON L6014 AT TUFT'S COVE PRIMARY PROTECTION FA
CLEARED IN 6 CYCLES RECLOSING ATTEMPT FROM 91H IN 10 SEC
FILE: a116F-l6014_91H_3ph_recl-2013WP-NS-0.out
CHNL# 154: [IR141-DIGBYH69.0 VOLTS]
CHNL# 153: [IR137-STATIG25.0 VOLTS]
CHNL# 152: [IR114-GLENDH138.0 VOLTS]
CHNL# 151: [IR84-DALHOHV230.0 VOLTS]
CHNL# 150: [IR82_NUTBHV69.0 VOLTS]
CHNL# 149: [IR45_AMHERTP138.0 VOLTS]
1.2000
0.70000
0.0
1.0000
2.0000
3.0000
4.0000
5.0000
6.0000
7.0000
8.0000
9.0000
10.000
TIME (SECONDS)
THU, JAN 29 2009 15:51
WIND BUS VOLTS

2013 WINTER PEAK STORA MIN
NS-NB=0; NB-NE=500; CBX=732; ONI=961 ONS=851
3 PHASE FAULT ON L6014 AT KEMPT RD
CLEARED IN 6 CYCLES RECLOSING ATTEMPT FROM 91H IN 10 SEC
FILE: a117-l6014_104H_3ph_recl-2013WP-NS-0.out
CHNL#S 20.4: [ANGL199169 [TUFTCV3 14.400] [3]] [ANGL156661 [DARL G1 22.000] [1
CHNL#S 17.4: [ANGL199086 [TRENTON613.800] [6]] [ANGL156661 [DARL G1 22.000] [1
CHNL#S 16.4: [ANGL199085 [TRENTN5 13.800] [5]] [ANGL156661 [DARL G1 22.000] [1
CHNL#S 15.4: [ANGL199061 [TMP1 STO13.800] [1]] [ANGL156661 [DARL G1 22.000] [1
CHNL#S 13.4: [ANGL199043 [ACONIG1 20.000] [1]] [ANGL156661 [DARL G1 22.000] [1
CHNL#S 11.4: [ANGL199001 [LINGAN1 14.400] [1]] [ANGL156661 [DARL G1 22.000] [1
100.00
-100.0
50.000
-150.0
0.0
1.0000
2.0000
3.0000
4.0000
5.0000
6.0000
7.0000
8.0000
9.0000
10.000
TIME (SECONDS)
THU, JAN 29 2009 15:51
NS ANGLE

2013 WINTER PEAK STORA MIN
NS-NB=0; NB-NE=500; CBX=732; ONI=961 ONS=851
3 PHASE FAULT ON L6014 AT KEMPT RD
CLEARED IN 6 CYCLES RECLOSING ATTEMPT FROM 91H IN 10 SEC
FILE: a117-l6014_104H_3ph_recl-2013WP-NS-0.out
CHNL#S 10.4: [ANGL190472 [BLLDNG2 19.000] [1]] [ANGL156661 [DARL G1 22.000] [1
CHNL#S 6.4: [ANGL190456 [LEPRG1 26.000] [1]] [ANGL156661 [DARL G1 22.000] [1
CHNL#S 5.4: [ANGL190450 [MACTG1 13.800] [1]] [ANGL156661 [DARL G1 22.000] [1
CHNL#S 3.4: [ANGL126652 [RAV 3 22.000] [1]] [ANGL156661 [DARL G1 22.000] [1
CHNL#S 2.4: [ANGL101063 [MYST G7 22.000] [1]] [ANGL156661 [DARL G1 22.000] [1
CHNL#S 7.4: [ANGL190457 [C.CVG1 19.000] [1]] [ANGL156661 [DARL G1 22.000] [1
100.00
-100.0
0.0
1.0000
2.0000
3.0000
4.0000
5.0000
6.0000
7.0000
8.0000
9.0000
10.000
TIME (SECONDS)
THU, JAN 29 2009 15:51
"NE,NY,NB ANGLE"

2013 WINTER PEAK STORA MIN
NS-NB=0; NB-NE=500; CBX=732; ONI=961 ONS=851
3 PHASE FAULT ON L6014 AT KEMPT RD
CLEARED IN 6 CYCLES RECLOSING ATTEMPT FROM 91H IN 10 SEC
FILE: a117-l6014_104H_3ph_recl-2013WP-NS-0.out
CHNL# 59: [POWER199169 [TUFTCV3 14.400] [3]]
CHNL# 56: [POWER199086 [TRENTON613.800] [6]]
CHNL# 55: [POWER199085 [TRENTN5 13.800] [5]]
CHNL# 54: [POWER199061 [TMP1 STO13.800] [1]]
CHNL# 52: [POWER199043 [ACONIG1 20.000] [1]]
CHNL# 50: [POWER199001 [LINGAN1 14.400] [1]]
2.5000
0.0
1.0000
-1.500
2.0000
3.0000
4.0000
5.0000
6.0000
7.0000
8.0000
9.0000
10.000
TIME (SECONDS)
THU, JAN 29 2009 15:51
NS MW

2013 WINTER PEAK STORA MIN
NS-NB=0; NB-NE=500; CBX=732; ONI=961 ONS=851
3 PHASE FAULT ON L6014 AT KEMPT RD
CLEARED IN 6 CYCLES RECLOSING ATTEMPT FROM 91H IN 10 SEC
FILE: a117-l6014_104H_3ph_recl-2013WP-NS-0.out
CHNL# 49: [POWER190472 [BLLDNG2 19.000] [1]]
CHNL# 45: [POWER190456 [LEPRG1 26.000] [1]]
CHNL# 44: [POWER190450 [MACTG1 13.800] [1]]
CHNL# 42: [POWER126652 [RAV 3 22.000] [1]]
CHNL# 41: [POWER101063 [MYST G7 22.000] [1]]
CHNL# 46: [POWER190457 [C.CVG1 19.000] [1]]
7.0000
2.0000
9.0000
4.0000
5.0000
0.0
6.5000
1.0000
5.0000
0.0
1.0000
2.0000
3.0000
4.0000
5.0000
6.0000
7.0000
8.0000
9.0000
10.000
TIME (SECONDS)
THU, JAN 29 2009 15:51
"NE,NY,NB POWER"

2013 WINTER PEAK STORA MIN
NS-NB=0; NB-NE=500; CBX=732; ONI=961 ONS=851
3 PHASE FAULT ON L6014 AT KEMPT RD
CLEARED IN 6 CYCLES RECLOSING ATTEMPT FROM 91H IN 10 SEC
FILE: a117-l6014_104H_3ph_recl-2013WP-NS-0.out
CHNL# 119: [VARS IR141-DIGBY]
CHNL# 118: [VARS IR137-STATIA]
CHNL# 117: [VARS IR114-GLENDHU]
CHNL# 116: [VARS IR84-DALHOUSIE]
CHNL# 115: [VARS IR82_NUTTBY]
CHNL# 114: [VARS IR45_AMHERST]
0.50000
-0.5000
0.0
1.0000
2.0000
3.0000
4.0000
5.0000
6.0000
7.0000
8.0000
9.0000
10.000
TIME (SECONDS)
THU, JAN 29 2009 15:51
NS WIND MV

2013 WINTER PEAK STORA MIN
NS-NB=0; NB-NE=500; CBX=732; ONI=961 ONS=851
3 PHASE FAULT ON L6014 AT KEMPT RD
CLEARED IN 6 CYCLES RECLOSING ATTEMPT FROM 91H IN 10 SEC
FILE: a117-l6014_104H_3ph_recl-2013WP-NS-0.out
CHNL# 79: [POWER IR141-DIGBY]
CHNL# 78: [POWER IR137-STATIA]
CHNL# 77: [POWER IR114-GLENDHU]
CHNL# 76: [POWER IR84-DALHOUSIE]
CHNL# 75: [POWER IR82_NUTTBY]
CHNL# 74: [POWER IR45_AMHERST]
1.0000
0.0
1.0000
2.0000
3.0000
4.0000
5.0000
6.0000
7.0000
8.0000
9.0000
10.000
TIME (SECONDS)
THU, JAN 29 2009 15:51
NS WIND MW

2013 WINTER PEAK STORA MIN
NS-NB=0; NB-NE=500; CBX=732; ONI=961 ONS=851
3 PHASE FAULT ON L6014 AT KEMPT RD
CLEARED IN 6 CYCLES RECLOSING ATTEMPT FROM 91H IN 10 SEC
FILE: a117-l6014_104H_3ph_recl-2013WP-NS-0.out
CHNL# 133: [VOLT199125 IONSLOW 345.00]
CHNL# 132: [VOLT199120 IHOPEWELL345.00]
CHNL# 131: [VOLT199045 IWOODBINE345.00]
CHNL# 130: [VOLT190320 ISALBRY 345.00]
CHNL# 128: [VOLT190004 IKESWICK 345.00]
CHNL# 127: [VOLT 70002 IORRINGTN345.00]
0.90000
1.0000
2.0000
3.0000
4.0000
5.0000
6.0000
7.0000
8.0000
9.0000
10.000
TIME (SECONDS)
THU, JAN 29 2009 15:51
"345KV VOLTAGE"

2013 WINTER PEAK STORA MIN
NS-NB=0; NB-NE=500; CBX=732; ONI=961 ONS=851
3 PHASE FAULT ON L6014 AT KEMPT RD
CLEARED IN 6 CYCLES RECLOSING ATTEMPT FROM 91H IN 10 SEC
FILE: a117-l6014_104H_3ph_recl-2013WP-NS-0.out
CHNL# 125: 60*(1+[FREQ199125 IONSLOW 345.00])
CHNL# 124: 60*(1+[FREQ199120 IHOPEWELL345.00])
CHNL# 123: 60*(1+[FREQ199045 IWOODBINE345.00])
CHNL# 122: 60*(1+[FREQ190320 ISALBRY 345.00])
CHNL# 121: 60*(1+[FREQ190197 IC.COVE 345.00])
CHNL# 120: 60*(1+[FREQ 70002 IORRINGTN345.00])
60.500
59.500
0.0
1.0000
2.0000
3.0000
4.0000
5.0000
6.0000
7.0000
8.0000
9.0000
10.000
TIME (SECONDS)
THU, JAN 29 2009 15:51
FREQUENCY HZ

2013 WINTER PEAK STORA MIN
NS-NB=0; NB-NE=500; CBX=732; ONI=961 ONS=851
3 PHASE FAULT ON L6014 AT KEMPT RD
CLEARED IN 6 CYCLES RECLOSING ATTEMPT FROM 91H IN 10 SEC
FILE: a117-l6014_104H_3ph_recl-2013WP-NS-0.out
CHNL# 146: [VOLT199280 [TUSKET A138.00]]
CHNL# 145: [VOLT199193 [1H-WAS 138.00]]
CHNL# 144: [VOLT199165 [TUFTCOVE138.00]]
CHNL# 143: [VOLT199135 [SPRNGHILL138.00]]
CHNL# 142: [VOLT199090 [50N-TREN138.00]]
CHNL# 141: [VOLT199051 [HASTINGS138.00]]
1.2000
0.70000
0.0
1.0000
2.0000
3.0000
4.0000
5.0000
6.0000
7.0000
8.0000
9.0000
10.000
TIME (SECONDS)
THU, JAN 29 2009 15:51
138KV BUS VOLTS

2013 WINTER PEAK STORA MIN
NS-NB=0; NB-NE=500; CBX=732; ONI=961 ONS=851
3 PHASE FAULT ON L6014 AT KEMPT RD
CLEARED IN 6 CYCLES RECLOSING ATTEMPT FROM 91H IN 10 SEC
FILE: a117-l6014_104H_3ph_recl-2013WP-NS-0.out
CHNL# 140: [VOLT199240 [BWATER A230.00]]
CHNL# 139: [VOLT199200 [BRUSHY 230.00]]
CHNL# 138: [VOLT199130 [ONSLOW 230.00]]
CHNL# 137: [VOLT199050 [HASTINGS230.00]]
CHNL# 136: [VOLT199044 [PT.ACONI230.00]]
CHNL# 135: [VOLT199000 [LINGAN 230.00]]
1.2000
0.70000
0.0
1.0000
2.0000
3.0000
4.0000
5.0000
6.0000
7.0000
8.0000
9.0000
10.000
TIME (SECONDS)
THU, JAN 29 2009 15:51
230KV BUS VOLTS

2013 WINTER PEAK STORA MIN
NS-NB=0; NB-NE=500; CBX=732; ONI=961 ONS=851
3 PHASE FAULT ON L6014 AT KEMPT RD
CLEARED IN 6 CYCLES RECLOSING ATTEMPT FROM 91H IN 10 SEC
FILE: a117-l6014_104H_3ph_recl-2013WP-NS-0.out
CHNL# 217: [L6533MW]
CHNL# 215: [L6503MW]
CHNL# 197: [L8003MW]
CHNL# 195: [L8004MW]
CHNL# 193: [L8001MW]
CHNL# 221: [L3001MW]
250.00
500.00
1000.0
0.0
-250.0
-1000.
0.0
1.0000
2.0000
3.0000
4.0000
5.0000
6.0000
7.0000
8.0000
9.0000
10.000
TIME (SECONDS)
THU, JAN 29 2009 15:51
LINE FLOW MW

2013 WINTER PEAK STORA MIN
NS-NB=0; NB-NE=500; CBX=732; ONI=961 ONS=851
3 PHASE FAULT ON L6014 AT KEMPT RD
CLEARED IN 6 CYCLES RECLOSING ATTEMPT FROM 91H IN 10 SEC
FILE: a117-l6014_104H_3ph_recl-2013WP-NS-0.out
CHNL# 154: [IR141-DIGBYH69.0 VOLTS]
CHNL# 153: [IR137-STATIG25.0 VOLTS]
CHNL# 152: [IR114-GLENDH138.0 VOLTS]
CHNL# 151: [IR84-DALHOHV230.0 VOLTS]
CHNL# 150: [IR82_NUTBHV69.0 VOLTS]
CHNL# 149: [IR45_AMHERTP138.0 VOLTS]
1.2000
0.70000
0.0
1.0000
2.0000
3.0000
4.0000
5.0000
6.0000
7.0000
8.0000
9.0000
10.000
TIME (SECONDS)
THU, JAN 29 2009 15:51
WIND BUS VOLTS

2013 WINTER PEAK STORA MIN
NS-NB=0; NB-NE=500; CBX=732; ONI=961 ONS=851
3 PHASE FAULT ON L6014 AT KEMPT RD PRIMARY FAILED
CLEARED IN 6 CYCLES RECLOSING ATTEMPT FROM 91H IN 10 SEC
FILE: a117F-l6014_104H_3ph_recl-2013WP-NS-0.out
TIME (SECONDS)
THU, JAN 29 2009 15:51
NS ANGLE

2013 WINTER PEAK STORA MIN
NS-NB=0; NB-NE=500; CBX=732; ONI=961 ONS=851
3 PHASE FAULT ON L6014 AT KEMPT RD PRIMARY FAILED
CLEARED IN 6 CYCLES RECLOSING ATTEMPT FROM 91H IN 10 SEC
FILE: a117F-l6014_104H_3ph_recl-2013WP-NS-0.out
TIME (SECONDS)
THU, JAN 29 2009 15:51
"NE,NY,NB ANGLE"

2013 WINTER PEAK STORA MIN
NS-NB=0; NB-NE=500; CBX=732; ONI=961 ONS=851
3 PHASE FAULT ON L6014 AT KEMPT RD PRIMARY FAILED
CLEARED IN 6 CYCLES RECLOSING ATTEMPT FROM 91H IN 10 SEC
FILE: a117F-l6014_104H_3ph_recl-2013WP-NS-0.out
TIME (SECONDS)
THU, JAN 29 2009 15:51
NS MW

2013 WINTER PEAK STORA MIN
NS-NB=0; NB-NE=500; CBX=732; ONI=961 ONS=851
3 PHASE FAULT ON L6014 AT KEMPT RD PRIMARY FAILED
CLEARED IN 6 CYCLES RECLOSING ATTEMPT FROM 91H IN 10 SEC
FILE: a117F-l6014_104H_3ph_recl-2013WP-NS-0.out
TIME (SECONDS)
THU, JAN 29 2009 15:51
"NE,NY,NB POWER"

2013 WINTER PEAK STORA MIN
NS-NB=0; NB-NE=500; CBX=732; ONI=961 ONS=851
3 PHASE FAULT ON L6014 AT KEMPT RD PRIMARY FAILED
CLEARED IN 6 CYCLES RECLOSING ATTEMPT FROM 91H IN 10 SEC
FILE: a117F-l6014_104H_3ph_recl-2013WP-NS-0.out
CHNL# 119: [VARS IR141-DIGBY]
CHNL# 118: [VARS IR137-STATIA]
CHNL# 117: [VARS IR114-GLENDHU]
CHNL# 116: [VARS IR84-DALHOUSIE]
CHNL# 115: [VARS IR82_NUTTBY]
CHNL# 114: [VARS IR45_AMHERST]
TIME (SECONDS)
THU, JAN 29 2009 15:51
NS WIND MV

2013 WINTER PEAK STORA MIN
NS-NB=0; NB-NE=500; CBX=732; ONI=961 ONS=851
3 PHASE FAULT ON L6014 AT KEMPT RD PRIMARY FAILED
CLEARED IN 6 CYCLES RECLOSING ATTEMPT FROM 91H IN 10 SEC
FILE: a117F-l6014_104H_3ph_recl-2013WP-NS-0.out
CHNL# 79: [POWER IR141-DIGBY]
CHNL# 78: [POWER IR137-STATIA]
CHNL# 77: [POWER IR114-GLENDHU]
CHNL# 76: [POWER IR84-DALHOUSIE]
CHNL# 75: [POWER IR82_NUTTBY]
CHNL# 74: [POWER IR45_AMHERST]
TIME (SECONDS)
THU, JAN 29 2009 15:51
NS WIND MW

2013 WINTER PEAK STORA MIN
NS-NB=0; NB-NE=500; CBX=732; ONI=961 ONS=851
3 PHASE FAULT ON L6014 AT KEMPT RD PRIMARY FAILED
CLEARED IN 6 CYCLES RECLOSING ATTEMPT FROM 91H IN 10 SEC
FILE: a117F-l6014_104H_3ph_recl-2013WP-NS-0.out
CHNL# 133: [VOLT199125 IONSLOW 345.00]
CHNL# 132: [VOLT199120 IHOPEWELL345.00]
CHNL# 131: [VOLT199045 IWOODBINE345.00]
CHNL# 130: [VOLT190320 ISALBRY 345.00]
CHNL# 128: [VOLT190004 IKESWICK 345.00]
CHNL# 127: [VOLT 70002 IORRINGTN345.00]
TIME (SECONDS)
THU, JAN 29 2009 15:51
"345KV VOLTAGE"

2013 WINTER PEAK STORA MIN
NS-NB=0; NB-NE=500; CBX=732; ONI=961 ONS=851
3 PHASE FAULT ON L6014 AT KEMPT RD PRIMARY FAILED
CLEARED IN 6 CYCLES RECLOSING ATTEMPT FROM 91H IN 10 SEC
FILE: a117F-l6014_104H_3ph_recl-2013WP-NS-0.out
CHNL# 125: 60*(1+[FREQ199125 IONSLOW 345.00])
CHNL# 124: 60*(1+[FREQ199120 IHOPEWELL345.00])
CHNL# 123: 60*(1+[FREQ199045 IWOODBINE345.00])
CHNL# 122: 60*(1+[FREQ190320 ISALBRY 345.00])
CHNL# 121: 60*(1+[FREQ190197 IC.COVE 345.00])
CHNL# 120: 60*(1+[FREQ 70002 IORRINGTN345.00])
TIME (SECONDS)
THU, JAN 29 2009 15:51
FREQUENCY HZ

2013 WINTER PEAK STORA MIN
NS-NB=0; NB-NE=500; CBX=732; ONI=961 ONS=851
3 PHASE FAULT ON L6014 AT KEMPT RD PRIMARY FAILED
CLEARED IN 6 CYCLES RECLOSING ATTEMPT FROM 91H IN 10 SEC
FILE: a117F-l6014_104H_3ph_recl-2013WP-NS-0.out
CHNL# 146: [VOLT199280 TUSKET A138.00]
CHNL# 145: [VOLT199193 [H-WAS 138.00]
CHNL# 144: [VOLT199165 [TUFT COVE138.00]
CHNL# 143: [VOLT199138: [SPRNGHILL138.00]]
CHNL# 142: [VOLT199090 [SON-TREN138.00]]
CHNL# 141: [VOLT199051 [HASTINGS138.00]]
1.2000
0.70000
0.0
1.0000
2.0000
3.0000
4.0000
5.0000
6.0000
7.0000
8.0000
9.0000
10.000
TIME (SECONDS)
THU, JAN 29 2009 15:51
138KV BUS VOLTS

2013 WINTER PEAK STORA MIN
NS-NB=0; NB-NE=500; CBX=732; ONI=961 ONS=851
3 PHASE FAULT ON L6014 AT KEMPT RD PRIMARY FAILED
CLEARED IN 6 CYCLES RECLOSING ATTEMPT FROM 91H IN 10 SEC
FILE: a117F-l6014_104H_3ph_recl-2013WP-NS-0.out
CHNL# 140: [VOLT199240 [BWATER A230.00]]
CHNL# 139: [VOLT199200 [BRUSHY 230.00]]
CHNL# 138: [VOLT199130 [ONSLOW 230.00]]
CHNL# 137: [VOLT199050 [HASTINGS230.00]]
CHNL# 136: [VOLT199044 [PT.ACON230.00]]
CHNL# 135: [VOLT199000 [LINGAN 230.00]]
1.2000
0.70000
0.0
1.0000
2.0000
3.0000
4.0000
5.0000
6.0000
7.0000
8.0000
9.0000
10.000
TIME (SECONDS)
THU, JAN 29 2009 15:51
230KV BUS VOLTS

2013 WINTER PEAK STORA MIN
NS-NB=0; NB-NE=500; CBX=732; ONI=961 ONS=851
3 PHASE FAULT ON L6014 AT KEMPT RD PRIMARY FAILED
CLEARED IN 6 CYCLES RECLOSING ATTEMPT FROM 91H IN 10 SEC
FILE: a117F-l6014_104H_3ph_recl-2013WP-NS-0.out
CHNL# 217: [L6533MW]
CHNL# 215: [L6503MVI]
CHNL# 197: [L8003MVI]
CHNL# 195: [L8004MVI]
CHNL# 193: [L8001MVI]
CHNL# 221: [L3001MVI]
250.00
500.00
1000.0
-250.0
0.0
-1000.
0.0
1.0000
2.0000
3.0000
4.0000
5.0000
6.0000
7.0000
8.0000
9.0000
10.000
TIME (SECONDS)
THU, JAN 29 2009 15:51
LINE FLOW MW

2013 WINTER PEAK STORA MIN
NS-NB=0; NB-NE=500; CBX=732; ONI=961 ONS=851
3 PHASE FAULT ON L6014 AT KEMPT RD PRIMARY FAILED
CLEARED IN 6 CYCLES RECLOSING ATTEMPT FROM 91H IN 10 SEC
FILE: a117F-l6014_104H_3ph_recl-2013WP-NS-0.out
CHNL# 154: [IR141-DIGBYH69.0 VOLTS]
CHNL# 153: [IR137-STATIG25.0 VOLTS]
CHNL# 152: [IR114-GLENDH138.0 VOLTS]
CHNL# 151: [IR84-DALHOHV230.0 VOLTS]
CHNL# 150: [IR82_NUTBHV69.0 VOLTS]
CHNL# 149: [IR45_ANHERTP138.0 VOLTS]
1.2000
0.70000
0.0
1.0000
2.0000
3.0000
4.0000
5.0000
6.0000
7.0000
8.0000
9.0000
10.000
TIME (SECONDS)
THU, JAN 29 2009 15:51
WIND BUS VOLTS

2013 WINTER PEAK STORA MIN
NS-NB=0; NB-NE=500; CBX=732; ONI=961 ONS=851
3 PHASE FAULT ON L6014 AT KEMPT RD PRIMARY FAILED
TUFTS COVE UNITS TRIP
FILE: a117.1F-I6014_104H_3ph_recl-2013WP-NS-0.out
CHNL#S 20:4 [ANGL199169 [TUFTCV3 14.400] [3]] [ANGL156661 [DARL G1 22.000] [1]
CHNL#S 17:4 [ANGL199086 [TRENTON613.800] [6]] [ANGL156661 [DARL G1 22.000] [1]
CHNL#S 16:4 [ANGL199085 [TRENTN5 13.800] [5]] [ANGL156661 [DARL G1 22.000] [1]
CHNL#S 15:4 [ANGL199061 [TMP1 STO13.800] [1]] [ANGL156661 [DARL G1 22.000] [1]
CHNL#S 13:4 [ANGL199043 [ACONIG1 20.000] [1]] [ANGL156661 [DARL G1 22.000] [1]
CHNL#S 11:4 [ANGL199001 [LINGAN1 14.400] [1]] [ANGL156661 [DARL G1 22.000] [1]
100.00
-100.0
0.0
1.0000
2.0000
3.0000
4.0000
5.0000
6.0000
7.0000
8.0000
9.0000
10.000
TIME (SECONDS)
THU, JAN 29 2009 15:51
NS ANGLE

2013 WINTER PEAK STORA MIN
NS-NB=0; NB-NE=500; CBX=732; ONI=961 ONS=851
3 PHASE FAULT ON L6014 AT KEMPT RD PRIMARY FAILED
TUFTS COVE UNITS TRIP
FILE: a117.1F-I6014_104H_3ph_recl-2013WP-NS-0.out
CHNL#S 10:4 [ANGL190472 [BLLDNG2 19.000] [1]] [ANGL156661 [DARL G1 22.000] [1]
CHNL#S 6:4 [ANGL190456 [LEPRG1 26.000] [1]] [ANGL156661 [DARL G1 22.000] [1]
CHNL#S 5:4 [ANGL190450 [MACTG1 13.800] [1]] [ANGL156661 [DARL G1 22.000] [1]
CHNL#S 3:4 [ANGL126652 [RAV 3 22.000] [1]] [ANGL156661 [DARL G1 22.000] [1]
CHNL#S 2:4 [ANGL101063 [MYST G7 22.000] [1]] [ANGL156661 [DARL G1 22.000] [1]
CHNL#S 7:4 [ANGL190457 [C.CVG1 19.000] [1]] [ANGL156661 [DARL G1 22.000] [1]
100.00
-100.0
0.0
1.0000
2.0000
3.0000
4.0000
5.0000
6.0000
7.0000
8.0000
9.0000
10.000
TIME (SECONDS)
THU, JAN 29 2009 15:51
"NE,NY,NB ANGLE"

2013 WINTER PEAK STORA MIN
NS-NB=0; NB-NE=500; CBX=732; ONI=961 ONS=851
3 PHASE FAULT ON L6014 AT KEMPT RD PRIMARY FAILED
TUFTS COVE UNITS TRIP
FILE: a117.1F-I6014_104H_3ph_recl-2013WP-NS-0.out
CHNL# 59: [POWER199169 [TUFTCV3 14.400] [3]]
CHNL# 56: [POWER199086 [TRENTON613.800] [6]]
CHNL# 55: [POWER199085 [TRENTN5 13.800] [5]]
CHNL# 54: [POWER199061 [TMP1 STO13.800] [1]]
CHNL# 52: [POWER199043 [ACONIG1 20.000] [1]]
CHNL# 50: [POWER199001 [LINGAN1 14.400] [1]]
2.5000
0.0
-1.500
1.0000
2.0000
3.0000
4.0000
5.0000
6.0000
7.0000
8.0000
9.0000
10.000
TIME (SECONDS)
THU, JAN 29 2009 15:51
NS MW

2013 WINTER PEAK STORA MIN
NS-NB=0; NB-NE=500; CBX=732; ONI=961 ONS=851
3 PHASE FAULT ON L6014 AT KEMPT RD PRIMARY FAILED
TUFTS COVE UNITS TRIP
FILE: a117.1F-I6014_104H_3ph_recl-2013WP-NS-0.out
CHNL# 49: [POWER190472 [BLLDNG2 19.000] [1]]
CHNL# 45: [POWER190456 [LEPRG1 26.000] [1]]
CHNL# 44: [POWER190450 [MACTG1 13.800] [1]]
CHNL# 42: [POWER126652 [RAV 3 22.000] [1]]
CHNL# 41: [POWER101063 [MYST G7 22.000] [1]]
CHNL# 46: [POWER190457 [C.CVG1 19.000] [1]]
7.0000
2.0000
4.0000
0.0
1.0000
5.0000
6.0000
1.0000
2.0000
3.0000
4.0000
5.0000
6.0000
7.0000
8.0000
9.0000
10.000
TIME (SECONDS)
THU, JAN 29 2009 15:51
"NE,NY,NB POWER"

2013 WINTER PEAK STORA MIN
NS-NB=0; NB-NE=500; CBX=732; ONI=961 ONS=851
3 PHASE FAULT ON L6014 AT KEMPT RD PRIMARY FAILED
TUFTS COVE UNITS TRIP
FILE: a117.1F-I6014_104H_3ph_rect-2013WP-NS-0.out
CHNL# 119: [VARS IR141-DIGBY]
CHNL# 118: [VARS IR137-STATIA]
CHNL# 117: [VARS IR114-GLENDHU]
CHNL# 116: [VARS IR84-DALHOUSIE]
CHNL# 115: [VARS IR82_NUTTBY]
CHNL# 114: [VARS IR45_AMHERST]
TIME (SECONDS)
THU, JAN 29 2009 15:51
NS WIND MV

2013 WINTER PEAK STORA MIN
NS-NB=0; NB-NE=500; CBX=732; ONI=961 ONS=851
3 PHASE FAULT ON L6014 AT KEMPT RD PRIMARY FAILED
TUFTS COVE UNITS TRIP
FILE: a117.1F-I6014_104H_3ph_rect-2013WP-NS-0.out
CHNL# 79: [POWER IR141-DIGBY]
CHNL# 78: [POWER IR137-STATIA]
CHNL# 77: [POWER IR114-GLENDHU]
CHNL# 76: [POWER IR84-DALHOUSIE]
CHNL# 75: [POWER IR82_NUTTBY]
CHNL# 74: [POWER IR45_AMHERST]
TIME (SECONDS)
THU, JAN 29 2009 15:51
NS WIND MW

2013 WINTER PEAK STORA MIN
NS-NB=0; NB-NE=500; CBX=732; ONI=961 ONS=851
3 PHASE FAULT ON L6014 AT KEMPT RD PRIMARY FAILED
TUFTS COVE UNITS TRIP
FILE: a117.1F-I6014_104H_3ph_rect-2013WP-NS-0.out
CHNL# 133: [VOLT199125 IONSLOW 345.00]
CHNL# 132: [VOLT199120 IHOPEWELL 345.00]
CHNL# 131: [VOLT199045 IWOODBINE345.00]
CHNL# 130: [VOLT190320 ISALBRY 345.00]
CHNL# 128: [VOLT190004 IKESWICK 345.00]
CHNL# 127: [VOLT 70002 IORRINGTN345.00]
TIME (SECONDS)
THU, JAN 29 2009 15:51
"345KV VOLTAGE"

2013 WINTER PEAK STORA MIN
NS-NB=0; NB-NE=500; CBX=732; ONI=961 ONS=851
3 PHASE FAULT ON L6014 AT KEMPT RD PRIMARY FAILED
TUFTS COVE UNITS TRIP
FILE: a117.1F-I6014_104H_3ph_rect-2013WP-NS-0.out
CHNL# 125: 60*(1+[FREQ199125 IONSLOW 345.00])
CHNL# 124: 60*(1+[FREQ199120 IHOPEWELL 345.00])
CHNL# 123: 60*(1+[FREQ199045 IWOODBINE345.00])
CHNL# 122: 60*(1+[FREQ190320 ISALBRY 345.00])
CHNL# 121: 60*(1+[FREQ190197 IC.COVE 345.00])
CHNL# 120: 60*(1+[FREQ 70002 IORRINGTN345.00])
TIME (SECONDS)
THU, JAN 29 2009 15:51
FREQUENCY HZ

2013 WINTER PEAK STORA MIN
NS-NB=0; NB-NE=500; CBX=732; ONI=961 ONS=851
3 PHASE FAULT ON L6014 AT KEMPT RD PRIMARY FAILED
TUFTS COVE UNITS TRIP
FILE: a117.1F-I6014_104H_3ph_rect-2013WP-NS-0.out
CHNL# 146: [VOLT199280 TUSKET A138.00]
CHNL# 145: [VOLT199193 [H-WAS 138.00]
CHNL# 144: [VOLT199165 [TUFT COVE138.00]
CHNL# 143: [VOLT199138: [SPRNGHILL138.00]]
CHNL# 142: [VOLT199090 [50N-TREN138.00]]
CHNL# 141: [VOLT199051 [HASTINGS138.00]]
1.2000
0.70000
0.0
1.0000
2.0000
3.0000
4.0000
5.0000
6.0000
7.0000
8.0000
9.0000
10.000
TIME (SECONDS)
THU, JAN 29 2009 15:51
138KV BUS VOLTS

2013 WINTER PEAK STORA MIN
NS-NB=0; NB-NE=500; CBX=732; ONI=961 ONS=851
3 PHASE FAULT ON L6014 AT KEMPT RD PRIMARY FAILED
TUFTS COVE UNITS TRIP
FILE: a117.1F-I6014_104H_3ph_rect-2013WP-NS-0.out
CHNL# 140: [VOLT199240 [BWATER A230.00]]
CHNL# 139: [VOLT199200 [BRUSHY 230.00]]
CHNL# 138: [VOLT199130 [ONSLOW 230.00]]
CHNL# 137: [VOLT199050 [HASTINGS230.00]]
CHNL# 136: [VOLT199044 [PT.ACONI230.00]]
CHNL# 135: [VOLT199000 [LINGAN 230.00]]
1.2000
0.70000
0.0
1.0000
2.0000
3.0000
4.0000
5.0000
6.0000
7.0000
8.0000
9.0000
10.000
TIME (SECONDS)
THU, JAN 29 2009 15:51
230KV BUS VOLTS

2013 WINTER PEAK STORA MIN
NS-NB=0; NB-NE=500; CBX=732; ONI=961 ONS=851
3 PHASE FAULT ON L6014 AT KEMPT RD PRIMARY FAILED
TUFTS COVE UNITS TRIP
FILE: a117.1F-I6014_104H_3ph_rect-2013WP-NS-0.out
CHNL# 217: [L6533MW]
CHNL# 215: [L6503MW]
CHNL# 197: [L8003MW]
CHNL# 195: [L8004MW]
CHNL# 193: [L8001MW]
CHNL# 221: [L3001MW]
250.00
-250.0
500.00
0.0
1000.0
-1000.
0.0
1.0000
2.0000
3.0000
4.0000
5.0000
6.0000
7.0000
8.0000
9.0000
10.000
TIME (SECONDS)
THU, JAN 29 2009 15:51
LINE FLOW MW

2013 WINTER PEAK STORA MIN
NS-NB=0; NB-NE=500; CBX=732; ONI=961 ONS=851
3 PHASE FAULT ON L6014 AT KEMPT RD PRIMARY FAILED
TUFTS COVE UNITS TRIP
FILE: a117.1F-I6014_104H_3ph_rect-2013WP-NS-0.out
CHNL# 154: [IR141-DIGBYH69.0 VOLTS]
CHNL# 153: [IR137-STATIG25.0 VOLTS]
CHNL# 152: [IR114-GLENDH138.0 VOLTS]
CHNL# 151: [IR84-DALHOHV230.0 VOLTS]
CHNL# 150: [IR82_NUTBHV69.0 VOLTS]
CHNL# 149: [IR45_AMHERTP138.0 VOLTS]
1.2000
0.70000
0.0
1.0000
2.0000
3.0000
4.0000
5.0000
6.0000
7.0000
8.0000
9.0000
10.000
TIME (SECONDS)
THU, JAN 29 2009 15:51
WIND BUS VOLTS

2013 WINTER PEAK STORA MIN
NS-NB=0; NB-NE=500; CBX=732; ONI=961 ONS=851
3 PHASE FAULT ON L6035 AT WATER ST
CLEARED IN 6 CYCLES
FILE: a118-l6035_1H_3ph_mrecl-2013WP-NS-0.out
CHNL# 20: [ANGL199169 [TUFTCV3 14.400] [3]] [ANGL156661 [DARL G1 22.000] [1
CHNL# 17: [ANGL199086 [TRENTON613.800] [6]] [ANGL156661 [DARL G1 22.000] [1
CHNL# 16: [ANGL199085 [TRENTN5 13.800] [5]] [ANGL156661 [DARL G1 22.000] [1
CHNL# 15: [ANGL199061 [TMP1 STO13.800] [1]] [ANGL156661 [DARL G1 22.000] [1
CHNL# 13: [ANGL199043 [ACONIG1 20.000] [1]] [ANGL156661 [DARL G1 22.000] [1
CHNL# 11: [ANGL199001 [LINGAN1 14.400] [1]] [ANGL156661 [DARL G1 22.000] [1
100.00
-100.0
50.000
-150.0
0.0
1.0000
2.0000
3.0000
4.0000
5.0000
6.0000
7.0000
8.0000
9.0000
10.000
TIME (SECONDS)
THU, JAN 29 2009 15:52
NS ANGLE

2013 WINTER PEAK STORA MIN
NS-NB=0; NB-NE=500; CBX=732; ONI=961 ONS=851
3 PHASE FAULT ON L6035 AT WATER ST
CLEARED IN 6 CYCLES
FILE: a118-l6035_1H_3ph_mrecl-2013WP-NS-0.out
CHNL# 10: [ANGL190472 [BLLDNG2 19.000] [1]] [ANGL156661 [DARL G1 22.000] [1
CHNL# 6: [ANGL190456 [LEPRG1 26.000] [1]] [ANGL156661 [DARL G1 22.000] [1
CHNL# 5: [ANGL190450 [MACTG1 13.800] [1]] [ANGL156661 [DARL G1 22.000] [1
CHNL# 3: [ANGL126652 [RAV 3 22.000] [1]] [ANGL156661 [DARL G1 22.000] [1
CHNL# 2: [ANGL101063 [MYST G7 22.000] [1]] [ANGL156661 [DARL G1 22.000] [1
CHNL# 7: [ANGL190457 [C.CVG1 19.000] [1]] [ANGL156661 [DARL G1 22.000] [1
100.00
-100.0
0.0
1.0000
2.0000
3.0000
4.0000
5.0000
6.0000
7.0000
8.0000
9.0000
10.000
TIME (SECONDS)
THU, JAN 29 2009 15:51
"NE,NY,NB ANGLE"

2013 WINTER PEAK STORA MIN
NS-NB=0; NB-NE=500; CBX=732; ONI=961 ONS=851
3 PHASE FAULT ON L6035 AT WATER ST
CLEARED IN 6 CYCLES
FILE: a118-l6035_1H_3ph_mrecl-2013WP-NS-0.out
CHNL# 59: [POWR199169 [TUFTCV3 14.400] [3]]
CHNL# 56: [POWR199086 [TRENTON613.800] [6]]
CHNL# 55: [POWR199085 [TRENTN5 13.800] [5]]
CHNL# 54: [POWR199061 [TMP1 STO13.800] [1]]
CHNL# 52: [POWR199043 [ACONIG1 20.000] [1]]
CHNL# 50: [POWR199001 [LINGAN1 14.400] [1]]
2.5000
1.0000
-1.500
0.0
0.0
1.0000
2.0000
3.0000
4.0000
5.0000
6.0000
7.0000
8.0000
9.0000
10.000
TIME (SECONDS)
THU, JAN 29 2009 15:52
NS MW

2013 WINTER PEAK STORA MIN
NS-NB=0; NB-NE=500; CBX=732; ONI=961 ONS=851
3 PHASE FAULT ON L6035 AT WATER ST
CLEARED IN 6 CYCLES
FILE: a118-l6035_1H_3ph_mrecl-2013WP-NS-0.out
CHNL# 49: [POWER190472 [BLLDNG2 19.000] [1]]
CHNL# 45: [POWER190456 [LEPRG1 26.000] [1]]
CHNL# 44: [POWER190450 [MACTG1 13.800] [1]]
CHNL# 42: [POWER126652 [RAV 3 22.000] [1]]
CHNL# 41: [POWER101063 [MYST G7 22.000] [1]]
CHNL# 46: [POWER190457 [C.CVG1 19.000] [1]]
7.0000
9.0000
5.0000
5.0000
6.5000
5.0000
2.0000
4.0000
0.0
0.0
1.0000
0.0
0.0
1.0000
2.0000
3.0000
4.0000
5.0000
6.0000
7.0000
8.0000
9.0000
10.000
TIME (SECONDS)
THU, JAN 29 2009 15:52
"NE,NY,NB POWER"

2013 WINTER PEAK STORA MIN
NS-NB=0; NB-NE=500; CBX=732; ONI=961 ONS=851
3 PHASE FAULT ON L6035 AT WATER ST
CLEARED IN 6 CYCLES
FILE: a118-l6035_1H_3ph_nrecl-2013WP-NS-0.out
CHNL# 119: [VARS IR141-DIGBY]
CHNL# 118: [VARS IR137-STATIA]
CHNL# 117: [VARS IR114-GLENDHU]
CHNL# 116: [VARS IR84-DALHOUSIE]
CHNL# 115: [VARS IR82_NUTTBY]
CHNL# 114: [VARS IR45_AMHERST]
0.50000
-0.5000
TIME (SECONDS)
THU, JAN 29 2009 15:52
NS WIND MV

2013 WINTER PEAK STORA MIN
NS-NB=0; NB-NE=500; CBX=732; ONI=961 ONS=851
3 PHASE FAULT ON L6035 AT WATER ST
CLEARED IN 6 CYCLES
FILE: a118-l6035_1H_3ph_nrecl-2013WP-NS-0.out
CHNL# 79: [POWER IR141-DIGBY]
CHNL# 78: [POWER IR137-STATIA]
CHNL# 77: [POWER IR114-GLENDHU]
CHNL# 76: [POWER IR84-DALHOUSIE]
CHNL# 75: [POWER IR82_NUTTBY]
CHNL# 74: [POWER IR45_AMHERST]
1.0000
0.0
TIME (SECONDS)
THU, JAN 29 2009 15:52
NS WIND MW

2013 WINTER PEAK STORA MIN
NS-NB=0; NB-NE=500; CBX=732; ONI=961 ONS=851
3 PHASE FAULT ON L6035 AT WATER ST
CLEARED IN 6 CYCLES
FILE: a118-l6035_1H_3ph_nrecl-2013WP-NS-0.out
CHNL# 133: [VOLT199125 [ONSLOW 345.00]]
CHNL# 132: [VOLT199120 [HOPEWELL 345.00]]
CHNL# 131: [VOLT199045 [WOODBINE345.00]]
CHNL# 130: [VOLT190320 [SALBRY 345.00]]
CHNL# 128: [VOLT190004 [KESWICK 345.00]]
CHNL# 127: [VOLT 70002 [ORRINGTN345.00]]
1.1000
0.90000
TIME (SECONDS)
THU, JAN 29 2009 15:52
"345KV VOLTAGE"

2013 WINTER PEAK STORA MIN
NS-NB=0; NB-NE=500; CBX=732; ONI=961 ONS=851
3 PHASE FAULT ON L6035 AT WATER ST
CLEARED IN 6 CYCLES
FILE: a118-l6035_1H_3ph_nrecl-2013WP-NS-0.out
CHNL# 125: 60*(1+[FREQ199125 [ONSLOW 345.00]])
CHNL# 124: 60*(1+[FREQ199120 [HOPEWELL 345.00]])
CHNL# 123: 60*(1+[FREQ199045 [WOODBINE 345.00]])
CHNL# 122: 60*(1+[FREQ190320 [SALBRY 345.00]])
CHNL# 121: 60*(1+[FREQ190197 [C.COVE 345.00]])
CHNL# 120: 60*(1+[FREQ 70002 [ORRINGTN345.00]])
60.500
59.500
TIME (SECONDS)
THU, JAN 29 2009 15:52
FREQUENCY HZ

2013 WINTER PEAK STORA MIN
NS-NB=0; NB-NE=500; CBX=732; ONI=961 ONS=851
3 PHASE FAULT ON L6035 AT WATER ST
CLEARED IN 6 CYCLES
FILE: a118-l6035_1H_3ph_nrecl-2013WP-NS-0.out
CHNL# 146: [VOLT199280 [TUSKET A138.00]]
CHNL# 145: [VOLT199193 [HHWAS 138.00]]
CHNL# 144: [VOLT199165 [TUFTCOVE138.00]]
CHNL# 143: [VOLT199138: [SPRNGHILL138.00]]
CHNL# 142: [VOLT199090 [50N-TREN138.00]]
CHNL# 141: [VOLT199051 [HASTINGS138.00]]
1.2000
0.70000
0.0
1.0000
2.0000
3.0000
4.0000
5.0000
6.0000
7.0000
8.0000
9.0000
10.000
TIME (SECONDS)
THU, JAN 29 2009 15:52
138KV BUS VOLTS

2013 WINTER PEAK STORA MIN
NS-NB=0; NB-NE=500; CBX=732; ONI=961 ONS=851
3 PHASE FAULT ON L6035 AT WATER ST
CLEARED IN 6 CYCLES
FILE: a118-l6035_1H_3ph_nrecl-2013WP-NS-0.out
CHNL# 140: [VOLT199240 [BWATER A230.00]]
CHNL# 139: [VOLT199200 [BRUSHY 230.00]]
CHNL# 138: [VOLT199130 [ONSLOW 230.00]]
CHNL# 137: [VOLT199050 [HASTINGS230.00]]
CHNL# 136: [VOLT199044 [PT.ACONI230.00]]
CHNL# 135: [VOLT199000 [LINGAN 230.00]]
1.2000
0.70000
0.0
1.0000
2.0000
3.0000
4.0000
5.0000
6.0000
7.0000
8.0000
9.0000
10.000
TIME (SECONDS)
THU, JAN 29 2009 15:52
230KV BUS VOLTS

2013 WINTER PEAK STORA MIN
NS-NB=0; NB-NE=500; CBX=732; ONI=961 ONS=851
3 PHASE FAULT ON L6035 AT WATER ST
CLEARED IN 6 CYCLES
FILE: a118-l6035_1H_3ph_nrecl-2013WP-NS-0.out
CHNL# 217: [L6533MW]
CHNL# 215: [L6503MW]
CHNL# 197: [L8003MW]
CHNL# 195: [L8004MW]
CHNL# 193: [L8001MW]
CHNL# 221: [L3001MW]
250.00
500.00
1000.0
0.0
-250.0
-1000.
0.0
1.0000
2.0000
3.0000
4.0000
5.0000
6.0000
7.0000
8.0000
9.0000
10.000
TIME (SECONDS)
THU, JAN 29 2009 15:52
LINE FLOW MW

2013 WINTER PEAK STORA MIN
NS-NB=0; NB-NE=500; CBX=732; ONI=961 ONS=851
3 PHASE FAULT ON L6035 AT WATER ST
CLEARED IN 6 CYCLES
FILE: a118-l6035_1H_3ph_nrecl-2013WP-NS-0.out
CHNL# 154: [IR141-DIGBYH69.0 VOLTS]
CHNL# 153: [IR137-STATIG25.0 VOLTS]
CHNL# 152: [IR114-GLENDH138.0 VOLTS]
CHNL# 151: [IR84-DALHOHV230.0 VOLTS]
CHNL# 150: [IR82_NUTBHV69.0 VOLTS]
CHNL# 149: [IR45_AMHERTP138.0 VOLTS]
1.2000
0.70000
0.0
1.0000
2.0000
3.0000
4.0000
5.0000
6.0000
7.0000
8.0000
9.0000
10.000
TIME (SECONDS)
THU, JAN 29 2009 15:52
WIND BUS VOLTS

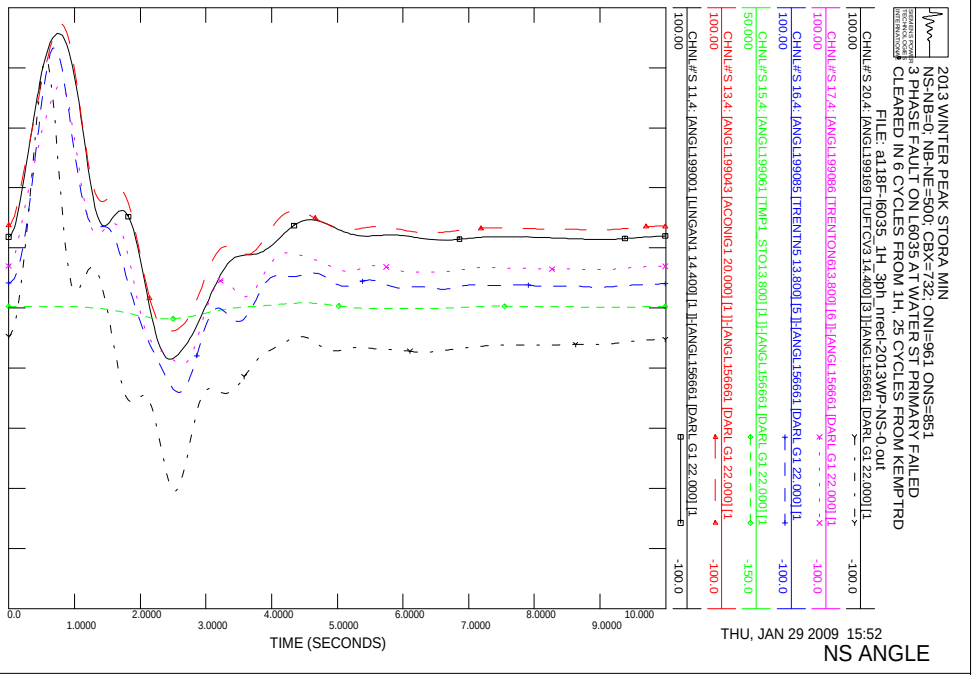
2013 WINTER PEAK STORA MIN
NS-NB=0; NB-NE=500; CBX=732; ONI=961 ONS=851
3 PHASE FAULT ON L6035 AT WATER ST PRIMARY FAILED
CLEARED IN 6 CYCLES FROM 1H, 25 CYCLES FROM KEMPTRD
FILE: a118F-I6035_1H_3ph_nrecl-2013WP-NS-0.out
CHNL# 20: [ANGL199169 [TUFTCV3 14.400] [3]] [ANGL156661 [DARL G1 22.000] [1]
CHNL# 17: [ANGL199086 [TRENTON613.800] [6]] [ANGL156661 [DARL G1 22.000] [1]
CHNL# 16: [ANGL199085 [TRENTN5 13.800] [5]] [ANGL156661 [DARL G1 22.000] [1]
CHNL# 15: [ANGL199061 [TMP1 STO13.800] [1]] [ANGL156661 [DARL G1 22.000] [1]
CHNL# 13: [ANGL199043 [ACONIG1 20.000] [1]] [ANGL156661 [DARL G1 22.000] [1]
CHNL# 11: [ANGL199001 [LINGAN1 14.400] [1]] [ANGL156661 [DARL G1 22.000] [1]
100.00
-100.0
50.000
-150.0
0.0
1.0000
2.0000
3.0000
4.0000
5.0000
6.0000
7.0000
8.0000
9.0000
10.000
TIME (SECONDS)
THU, JAN 29 2009 15:52
NS ANGLE

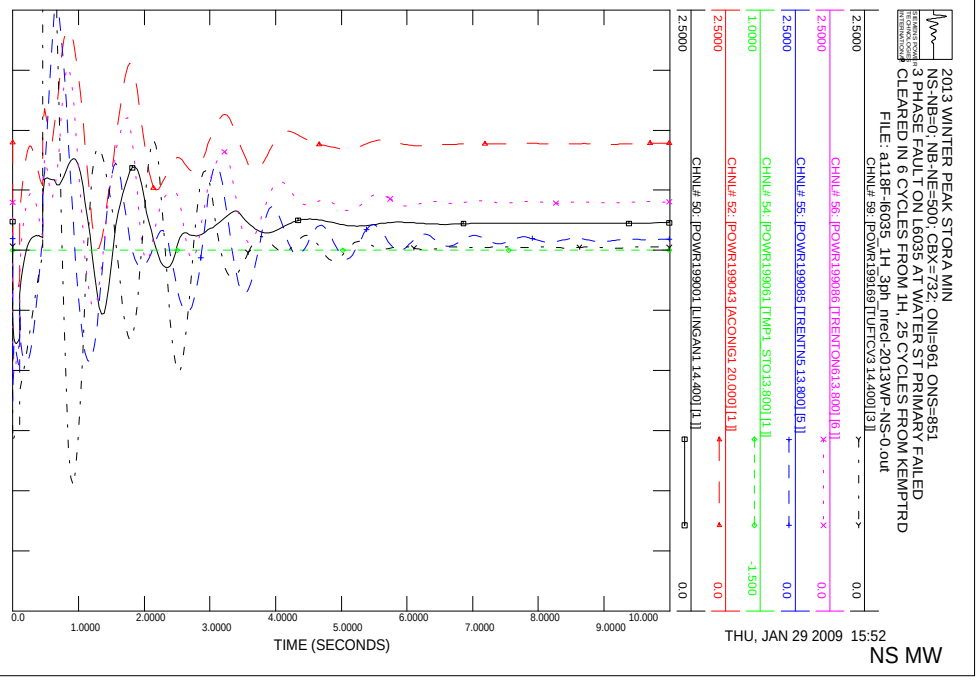
2013 WINTER PEAK STORA MIN
NS-NB=0; NB-NE=500; CBX=732; ONI=961 ONS=851
3 PHASE FAULT ON L6035 AT WATER ST PRIMARY FAILED
CLEARED IN 6 CYCLES FROM 1H, 25 CYCLES FROM KEMPTRD
FILE: a118F-I6035_1H_3ph_nrecl-2013WP-NS-0.out
CHNL# 59: [POWER199169 [TUFTCV3 14.400] [3]]
CHNL# 56: [POWER199086 [TRENTON613.800] [6]]
CHNL# 55: [POWER199085 [TRENTN5 13.800] [5]]
CHNL# 54: [POWER199061 [TMP1 STO13.800] [1]]
CHNL# 52: [POWER199043 [ACONIG1 20.000] [1]]
CHNL# 50: [POWER199001 [LINGAN1 14.400] [1]]
2.5000
0.0
1.0000
-1.500
0.0
1.0000
2.0000
3.0000
4.0000
5.0000
6.0000
7.0000
8.0000
9.0000
10.000
TIME (SECONDS)
THU, JAN 29 2009 15:52
NS MW

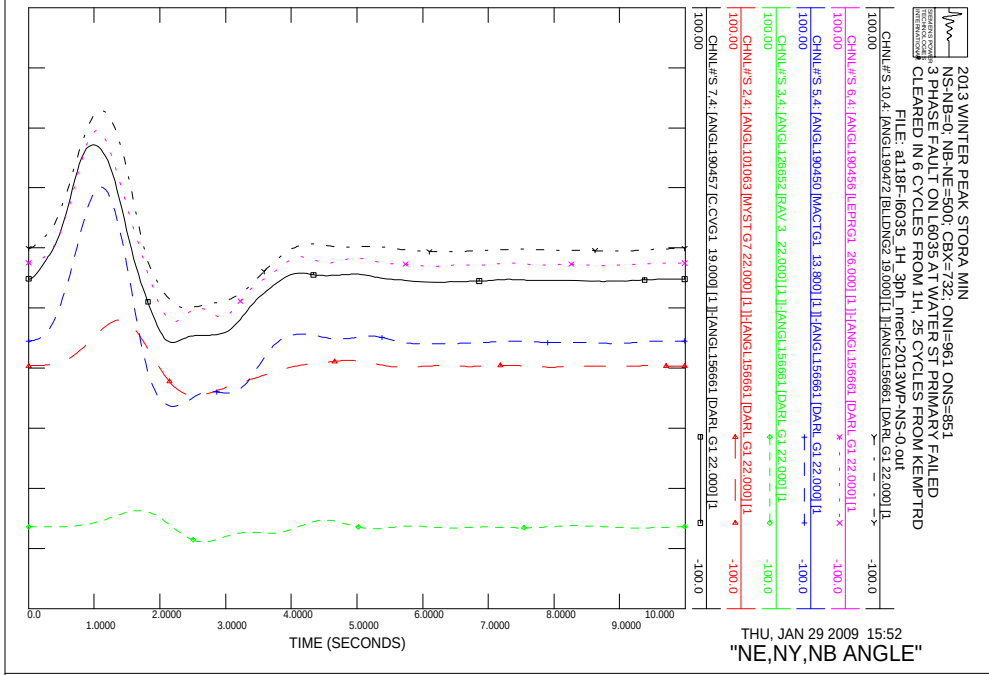
2013 WINTER PEAK STORA MIN
NS-NB=0; NB-NE=500; CBX=732; ONI=961 ONS=851
3 PHASE FAULT ON L6035 AT WATER ST PRIMARY FAILED
CLEARED IN 6 CYCLES FROM 1H, 25 CYCLES FROM KEMPTRD
FILE: a118F-I6035_1H_3ph_nrecl-2013WP-NS-0.out
CHNL# S 10.4: [ANGL190472 [BLLDNG2 19.000] [1]] [ANGL156661 [DARL G1 22.000] [1]
CHNL# S 6.4: [ANGL190456 [LEPRG1 26.000] [1]] [ANGL156661 [DARL G1 22.000] [1]
CHNL# S 5.4: [ANGL190450 [MACTG1 13.800] [1]] [ANGL156661 [DARL G1 22.000] [1]
CHNL# S 3.4: [ANGL126652 [RAV 3 22.000] [1]] [ANGL156661 [DARL G1 22.000] [1]
CHNL# S 2.4: [ANGL101063 [MYST G7 22.000] [1]] [ANGL156661 [DARL G1 22.000] [1]
CHNL# S 7.4: [ANGL190457 [C.CVG1 19.000] [1]] [ANGL156661 [DARL G1 22.000] [1]
100.00
-100.0
0.0
1.0000
2.0000
3.0000
4.0000
5.0000
6.0000
7.0000
8.0000
9.0000
10.000
TIME (SECONDS)
THU, JAN 29 2009 15:52
"NE,NY,NB ANGLE"

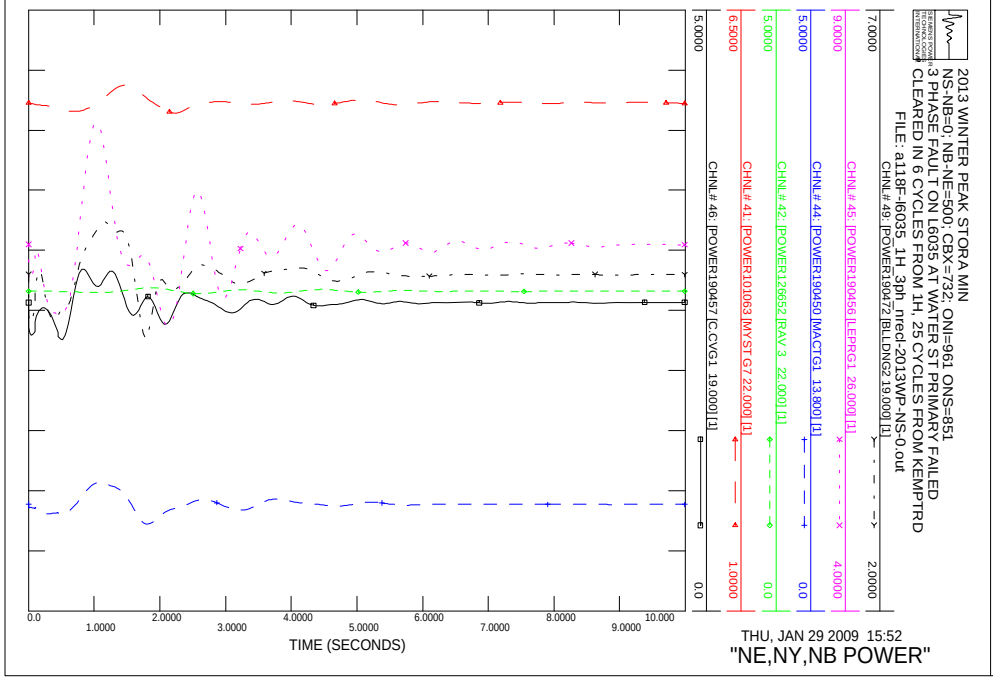
2013 WINTER PEAK STORA MIN
NS-NB=0; NB-NE=500; CBX=732; ONI=961 ONS=851
3 PHASE FAULT ON L6035 AT WATER ST PRIMARY FAILED
CLEARED IN 6 CYCLES FROM 1H, 25 CYCLES FROM KEMPTRD
FILE: a118F-I6035_1H_3ph_nrecl-2013WP-NS-0.out
CHNL# 49: [POWER190472 [BLLDNG2 19.000] [1]]
CHNL# 45: [POWER190456 [LEPRG1 26.000] [1]]
CHNL# 44: [POWER190450 [MACTG1 13.800] [1]]
CHNL# 42: [POWER126652 [RAV 3 22.000] [1]]
CHNL# 41: [POWER101063 [MYST G7 22.000] [1]]
CHNL# 46: [POWER190457 [C.CVG1 19.000] [1]]
7.0000
2.0000
9.0000
4.0000
5.0000
0.0
5.0000
0.0
6.5000
1.0000
5.0000
0.0
1.0000
2.0000
3.0000
4.0000
5.0000
6.0000
7.0000
8.0000
9.0000
10.000
TIME (SECONDS)
THU, JAN 29 2009 15:52
"NE,NY,NB POWER"

2013 WINTER PEAK STORA MIN
NS-NB=0; NB-NE=500; CBX=732; ONI=961 ONS=851
3 PHASE FAULT ON L6035 AT WATER ST PRIMARY FAILED
CLEARED IN 6 CYCLES FROM 1H, 25 CYCLES FROM KEMPTRD
FILE: a118F-l6035_1H_3ph_nrecl-2013WP-NS-0.out
CHNL# 119: [VARS IR141-DIGBY]
CHNL# 118: [VARS IR137-STATIA]
CHNL# 117: [VARS IR114-GLENDHU]
CHNL# 116: [VARS IR84-DALHOUSIE]
CHNL# 115: [VARS IR82_NUTTBY]
CHNL# 114: [VARS IR45_AMHERST]
TIME (SECONDS)
THU, JAN 29 2009 15:52
NS WIND MV

2013 WINTER PEAK STORA MIN
NS-NB=0; NB-NE=500; CBX=732; ONI=961 ONS=851
3 PHASE FAULT ON L6035 AT WATER ST PRIMARY FAILED
CLEARED IN 6 CYCLES FROM 1H, 25 CYCLES FROM KEMPTRD
FILE: a118F-l6035_1H_3ph_nrecl-2013WP-NS-0.out
CHNL# 79: [POWER IR141-DIGBY]
CHNL# 78: [POWER IR137-STATIA]
CHNL# 77: [POWER IR114-GLENDHU]
CHNL# 76: [POWER IR84-DALHOUSIE]
CHNL# 75: [POWER IR82_NUTTBY]
CHNL# 74: [POWER IR45_AMHERST]
TIME (SECONDS)
THU, JAN 29 2009 15:52
NS WIND MW

2013 WINTER PEAK STORA MIN
NS-NB=0; NB-NE=500; CBX=732; ONI=961 ONS=851
3 PHASE FAULT ON L6035 AT WATER ST PRIMARY FAILED
CLEARED IN 6 CYCLES FROM 1H, 25 CYCLES FROM KEMPTRD
FILE: a118F-l6035_1H_3ph_nrecl-2013WP-NS-0.out
CHNL# 133: [VOLT199125 IONSLOW 345.00]
CHNL# 132: [VOLT199120 [HOPEWELL345.00]]
CHNL# 131: [VOLT199045 [WOODBINE345.00]]
CHNL# 130: [VOLT190320 [SALBRY 345.00]]
CHNL# 128: [VOLT190004 [KESWICK 345.00]]
CHNL# 127: [VOLT 70002 [ORRINGTN345.00]]
TIME (SECONDS)
THU, JAN 29 2009 15:52
"345KV VOLTAGE"

2013 WINTER PEAK STORA MIN
NS-NB=0; NB-NE=500; CBX=732; ONI=961 ONS=851
3 PHASE FAULT ON L6035 AT WATER ST PRIMARY FAILED
CLEARED IN 6 CYCLES FROM 1H, 25 CYCLES FROM KEMPTRD
FILE: a118F-l6035_1H_3ph_nrecl-2013WP-NS-0.out
CHNL# 125: 60*(1+[FREQ199125 IONSLOW 345.00])
CHNL# 124: 60*(1+[FREQ199120 [HOPEWELL345.00]])
CHNL# 123: 60*(1+[FREQ199045 [WOODBINE345.00]])
CHNL# 122: 60*(1+[FREQ190320 [SALBRY 345.00]])
CHNL# 121: 60*(1+[FREQ190197 [C.COVE 345.00]])
CHNL# 120: 60*(1+[FREQ 70002 [ORRINGTN345.00]])
TIME (SECONDS)
THU, JAN 29 2009 15:52
FREQUENCY HZ

2013 WINTER PEAK STORA MIN
NS-NB=0; NB-NE=500; CBX=732; ONI=961 ONS=851
3 PHASE FAULT ON L6035 AT WATER ST PRIMARY FAILED
CLEARED IN 6 CYCLES FROM 1H, 25 CYCLES FROM KEMPTRD
FILE: a118F-l6035_1H_3ph_nrecl-2013WP-NS-0.out
CHNL# 146: [VOLT199280 TUSKET A138.00]
CHNL# 145: [VOLT199193 [1H-WAS 138.00]
CHNL# 144: [VOLT199165 [TUFTCOVE138.00]
CHNL# 143: [VOLT199138 [SPRNGHILL138.00]
CHNL# 142: [VOLT199090 [50N-TREN138.00]
CHNL# 141: [VOLT199051 [HASTINGS138.00]
1.2000
0.70000
0.0
1.0000
2.0000
3.0000
4.0000
5.0000
6.0000
7.0000
8.0000
9.0000
10.000
TIME (SECONDS)
THU, JAN 29 2009 15:52
138KV BUS VOLTS

2013 WINTER PEAK STORA MIN
NS-NB=0; NB-NE=500; CBX=732; ONI=961 ONS=851
3 PHASE FAULT ON L6035 AT WATER ST PRIMARY FAILED
CLEARED IN 6 CYCLES FROM 1H, 25 CYCLES FROM KEMPTRD
FILE: a118F-l6035_1H_3ph_nrecl-2013WP-NS-0.out
CHNL# 140: [VOLT199240 [BWATER A230.00]
CHNL# 139: [VOLT199200 [BRUSHY 230.00]
CHNL# 138: [VOLT199130 [ONSLOW 230.00]
CHNL# 137: [VOLT199050 [HASTINGS230.00]
CHNL# 136: [VOLT199044 [PT.ACONI230.00]
CHNL# 135: [VOLT199000 [LINGAN 230.00]
1.2000
0.70000
0.0
1.0000
2.0000
3.0000
4.0000
5.0000
6.0000
7.0000
8.0000
9.0000
10.000
TIME (SECONDS)
THU, JAN 29 2009 15:52
230KV BUS VOLTS

2013 WINTER PEAK STORA MIN
NS-NB=0; NB-NE=500; CBX=732; ONI=961 ONS=851
3 PHASE FAULT ON L6035 AT WATER ST PRIMARY FAILED
CLEARED IN 6 CYCLES FROM 1H, 25 CYCLES FROM KEMPTRD
FILE: a118F-l6035_1H_3ph_nrecl-2013WP-NS-0.out
CHNL# 217: [L6533MW]
CHNL# 215: [L6503MW]
CHNL# 197: [L8003MW]
CHNL# 195: [L8004MW]
CHNL# 193: [L8001MW]
CHNL# 221: [L3001MW]
250.00
-250.0
500.00
0.0
1000.0
-1000.
0.0
1.0000
2.0000
3.0000
4.0000
5.0000
6.0000
7.0000
8.0000
9.0000
10.000
TIME (SECONDS)
THU, JAN 29 2009 15:52
LINE FLOW MW

2013 WINTER PEAK STORA MIN
NS-NB=0; NB-NE=500; CBX=732; ONI=961 ONS=851
3 PHASE FAULT ON L6035 AT WATER ST PRIMARY FAILED
CLEARED IN 6 CYCLES FROM 1H, 25 CYCLES FROM KEMPTRD
FILE: a118F-l6035_1H_3ph_nrecl-2013WP-NS-0.out
CHNL# 154: [IR141-DIGBYH69.0 VOLTS]
CHNL# 153: [IR137-STATIG25.0 VOLTS]
CHNL# 152: [IR114-GLENDH138.0 VOLTS]
CHNL# 151: [IR84-DALHOHV230.0 VOLTS]
CHNL# 150: [IR82_NUTBHV69.0 VOLTS]
CHNL# 149: [IR45_AMHERTP138.0 VOLTS]
1.2000
0.70000
0.0
1.0000
2.0000
3.0000
4.0000
5.0000
6.0000
7.0000
8.0000
9.0000
10.000
TIME (SECONDS)
THU, JAN 29 2009 15:52
WIND BUS VOLTS

2013 WINTER PEAK STORA MIN
NS-NB=0; NB-NE=500; CBX=732; ONI=961 ONS=851
3 PHASE FAULT ON L6007 AT BURNSIDE
CLEARED IN 6 CYCLES FROM BURNSIDE
FILE: a119-l6007_108H_3ph_recl-2013WP-NS-0.out
CHNL#S 20.4: [ANGL199169 [TUFTCV3 14.400] [3]] [ANGL156661 [DARL G1 22.000] [1
CHNL#S 17.4: [ANGL199086 [TRENTON613.800] [6]] [ANGL156661 [DARL G1 22.000] [1
CHNL#S 16.4: [ANGL199085 [TRENTN5 13.800] [5]] [ANGL156661 [DARL G1 22.000] [1
CHNL#S 15.4: [ANGL199061 [TMP1 STO13.800] [1]] [ANGL156661 [DARL G1 22.000] [1
CHNL#S 13.4: [ANGL199043 [ACONIG1 20.000] [1]] [ANGL156661 [DARL G1 22.000] [1
CHNL#S 11.4: [ANGL199001 [LINGAN1 14.400] [1]] [ANGL156661 [DARL G1 22.000] [1
TIME (SECONDS)
THU, JAN 29 2009 15:52
NS ANGLE

2013 WINTER PEAK STORA MIN
NS-NB=0; NB-NE=500; CBX=732; ONI=961 ONS=851
3 PHASE FAULT ON L6007 AT BURNSIDE
CLEARED IN 6 CYCLES FROM BURNSIDE
FILE: a119-l6007_108H_3ph_recl-2013WP-NS-0.out
CHNL#S 10.4: [ANGL190472 [BLLDNG2 19.000] [1]] [ANGL156661 [DARL G1 22.000] [1
CHNL#S 6.4: [ANGL190456 [LEPRG1 26.000] [1]] [ANGL156661 [DARL G1 22.000] [1
CHNL#S 5.4: [ANGL190450 [MACTG1 13.800] [1]] [ANGL156661 [DARL G1 22.000] [1
CHNL#S 3.4: [ANGL126652 [RAV 3 22.000] [1]] [ANGL156661 [DARL G1 22.000] [1
CHNL#S 2.4: [ANGL101063 [MYST G7 22.000] [1]] [ANGL156661 [DARL G1 22.000] [1
CHNL#S 7.4: [ANGL190457 [C.CVG1 19.000] [1]] [ANGL156661 [DARL G1 22.000] [1
TIME (SECONDS)
THU, JAN 29 2009 15:52
"NE,NY,NB ANGLE"

2013 WINTER PEAK STORA MIN
NS-NB=0; NB-NE=500; CBX=732; ONI=961 ONS=851
3 PHASE FAULT ON L6007 AT BURNSIDE
CLEARED IN 6 CYCLES FROM BURNSIDE
FILE: a119-l6007_108H_3ph_recl-2013WP-NS-0.out
CHNL# 59: [POWER199169 [TUFTCV3 14.400] [3]]
CHNL# 56: [POWER199086 [TRENTON613.800] [6]]
CHNL# 55: [POWER199085 [TRENTN5 13.800] [5]]
CHNL# 54: [POWER199061 [TMP1 STO13.800] [1]]
CHNL# 52: [POWER199043 [ACONIG1 20.000] [1]]
CHNL# 50: [POWER199001 [LINGAN1 14.400] [1]]
TIME (SECONDS)
THU, JAN 29 2009 15:52
NS MW

2013 WINTER PEAK STORA MIN
NS-NB=0; NB-NE=500; CBX=732; ONI=961 ONS=851
3 PHASE FAULT ON L6007 AT BURNSIDE
CLEARED IN 6 CYCLES FROM BURNSIDE
FILE: a119-l6007_108H_3ph_recl-2013WP-NS-0.out
CHNL# 49: [POWER190472 [BLLDNG2 19.000] [1]]
CHNL# 45: [POWER190456 [LEPRG1 26.000] [1]]
CHNL# 44: [POWER190450 [MACTG1 13.800] [1]]
CHNL# 42: [POWER126652 [RAV 3 22.000] [1]]
CHNL# 41: [POWER101063 [MYST G7 22.000] [1]]
CHNL# 46: [POWER190457 [C.CVG1 19.000] [1]]
TIME (SECONDS)
THU, JAN 29 2009 15:52
"NE,NY,NB POWER"

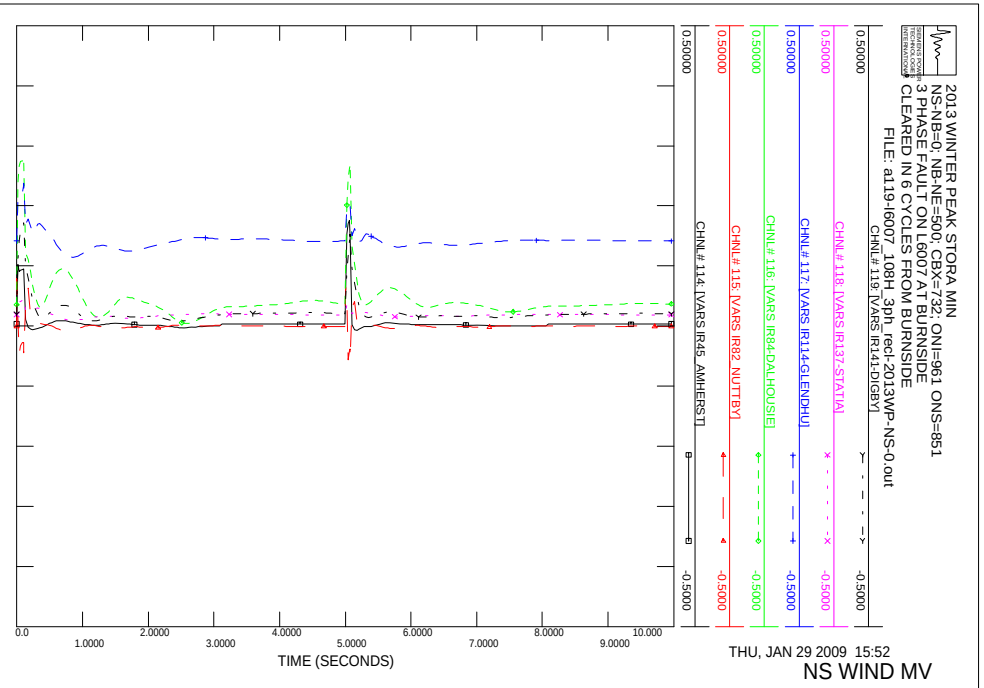
2013 WINTER PEAK STORA MIN
NS-NB=0; NB-NE=500; CBX=732; ONI=961 ONS=851
3 PHASE FAULT ON L6007 AT BURNSIDE
CLEARED IN 6 CYCLES FROM BURNSIDE
FILE: a119-l6007_108H_3ph_recl-2013WP-NS-0.out
CHNL# 119: [VARS IR141-DIGBY]
CHNL# 118: [VARS IR137-STATIA]
CHNL# 117: [VARS IR114-GLENDHU]
CHNL# 116: [VARS IR84-DALHOUSIE]
CHNL# 115: [VARS IR82_NUTTBY]
CHNL# 114: [VARS IR45_AMHERST]
0.50000
-0.5000
0.0
1.0000
2.0000
3.0000
4.0000
5.0000
6.0000
7.0000
8.0000
9.0000
10.000
TIME (SECONDS)
THU, JAN 29 2009 15:52
NS WIND MV

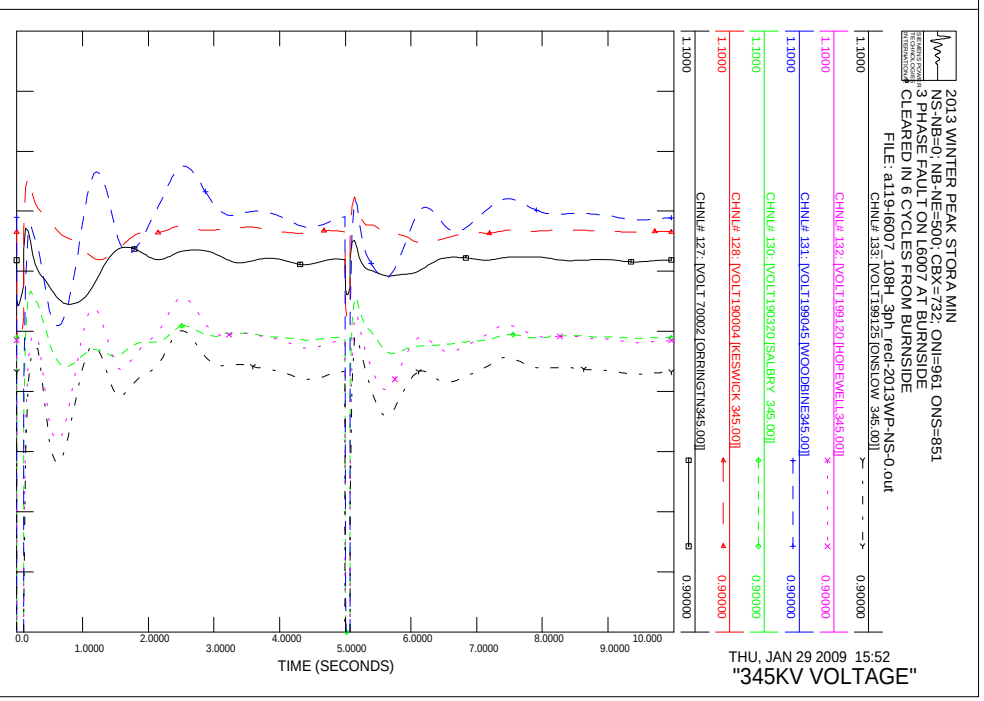
2013 WINTER PEAK STORA MIN
NS-NB=0; NB-NE=500; CBX=732; ONI=961 ONS=851
3 PHASE FAULT ON L6007 AT BURNSIDE
CLEARED IN 6 CYCLES FROM BURNSIDE
FILE: a119-l6007_108H_3ph_recl-2013WP-NS-0.out
CHNL# 133: [VOLT199125 IONSLOW 345.00]
CHNL# 132: [VOLT199120 IHOPEWELL345.00]
CHNL# 131: [VOLT199045 IWOODBINE345.00]
CHNL# 130: [VOLT190320 ISALBRY 345.00]
CHNL# 128: [VOLT190004 IKESWICK 345.00]
CHNL# 127: [VOLT 70002 IORRINGTN345.00]
1.1000
0.90000
0.0
1.0000
2.0000
3.0000
4.0000
5.0000
6.0000
7.0000
8.0000
9.0000
10.000
TIME (SECONDS)
THU, JAN 29 2009 15:52
"345KV VOLTAGE"

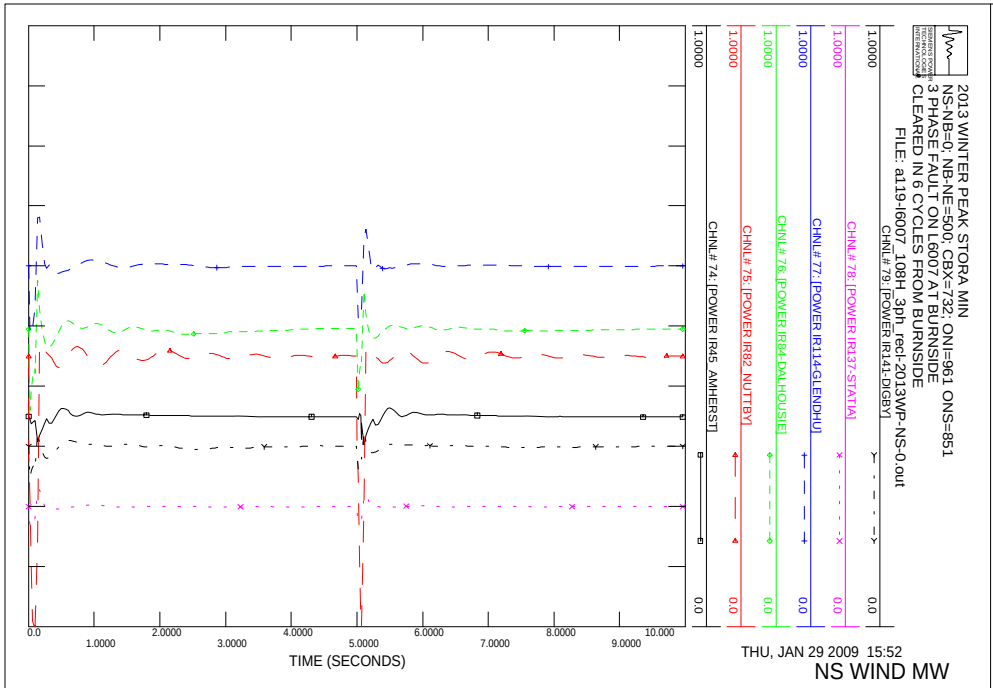
2013 WINTER PEAK STORA MIN
NS-NB=0; NB-NE=500; CBX=732; ONI=961 ONS=851
3 PHASE FAULT ON L6007 AT BURNSIDE
CLEARED IN 6 CYCLES FROM BURNSIDE
FILE: a119-l6007_108H_3ph_recl-2013WP-NS-0.out
CHNL# 79: [POWER IR141-DIGBY]
CHNL# 78: [POWER IR137-STATIA]
CHNL# 77: [POWER IR114-GLENDHU]
CHNL# 76: [POWER IR84-DALHOUSIE]
CHNL# 75: [POWER IR82_NUTTBY]
CHNL# 74: [POWER IR45_AMHERST]
1.0000
0.0
0.0
1.0000
2.0000
3.0000
4.0000
5.0000
6.0000
7.0000
8.0000
9.0000
10.000
TIME (SECONDS)
THU, JAN 29 2009 15:52
NS WIND MW

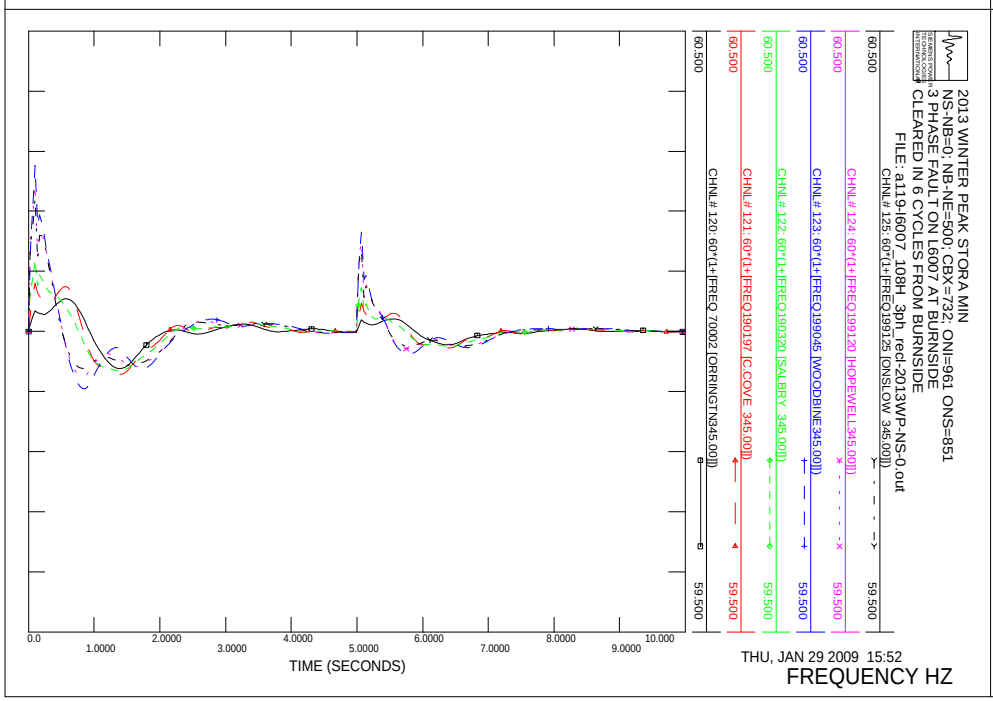
2013 WINTER PEAK STORA MIN
NS-NB=0; NB-NE=500; CBX=732; ONI=961 ONS=851
3 PHASE FAULT ON L6007 AT BURNSIDE
CLEARED IN 6 CYCLES FROM BURNSIDE
FILE: a119-l6007_108H_3ph_recl-2013WP-NS-0.out
CHNL# 125: 60*(1+[FREQ199125 IONSLOW 345.00])
CHNL# 124: 60*(1+[FREQ199120 IHOPEWELL345.00])
CHNL# 123: 60*(1+[FREQ199045 IWOODBINE345.00])
CHNL# 122: 60*(1+[FREQ190320 ISALBRY 345.00])
CHNL# 121: 60*(1+[FREQ190197 IC.COVE 345.00])
CHNL# 120: 60*(1+[FREQ 70002 IORRINGTN345.00])
60.500
59.500
0.0
1.0000
2.0000
3.0000
4.0000
5.0000
6.0000
7.0000
8.0000
9.0000
10.000
TIME (SECONDS)
THU, JAN 29 2009 15:52
FREQUENCY HZ

2013 WINTER PEAK STORA MIN
NS-NB=0; NB-NE=500; CBX=732; ONI=961 ONS=851
3 PHASE FAULT ON L6007 AT BURNSIDE
CLEARED IN 6 CYCLES FROM BURNSIDE
FILE: a119-l6007_108H_3ph_recl-2013WP-NS-0.out
CHNL# 145: [VOLT199193 [1H-WAS_138.00]]
CHNL# 144: [VOLT199165 [TUFTCOVE138.00]]
CHNL# 143: [VOLT199138: [SPRNGHILL138.00]]
CHNL# 142: [VOLT199090 [50N-TREN138.00]]
CHNL# 141: [VOLT199051 [HASTINGS138.00]]
1.2000
0.70000
0.0
1.0000
2.0000
3.0000
4.0000
5.0000
6.0000
7.0000
8.0000
9.0000
10.000
TIME (SECONDS)
THU, JAN 29 2009 15:52
138KV BUS VOLTS

2013 WINTER PEAK STORA MIN
NS-NB=0; NB-NE=500; CBX=732; ONI=961 ONS=851
3 PHASE FAULT ON L6007 AT BURNSIDE
CLEARED IN 6 CYCLES FROM BURNSIDE
FILE: a119-l6007_108H_3ph_recl-2013WP-NS-0.out
CHNL# 146: [VOLT199280 [TUSKET_A138.00]]
CHNL# 139: [VOLT199200 [BRUSHY_230.00]]
CHNL# 138: [VOLT199130 [ONSLOW_230.00]]
CHNL# 137: [VOLT199050 [HASTINGS230.00]]
CHNL# 136: [VOLT199044 [PT.ACONI230.00]]
CHNL# 135: [VOLT199000 [LINGAN_230.00]]
1.2000
0.70000
0.0
1.0000
2.0000
3.0000
4.0000
5.0000
6.0000
7.0000
8.0000
9.0000
10.000
TIME (SECONDS)
THU, JAN 29 2009 15:52
230KV BUS VOLTS

2013 WINTER PEAK STORA MIN
NS-NB=0; NB-NE=500; CBX=732; ONI=961 ONS=851
3 PHASE FAULT ON L6007 AT BURNSIDE
CLEARED IN 6 CYCLES FROM BURNSIDE
FILE: a119-l6007_108H_3ph_recl-2013WP-NS-0.out
CHNL# 217: [L6533MW]
CHNL# 215: [L6503MW]
CHNL# 197: [L8003MW]
CHNL# 195: [L8004MW]
CHNL# 193: [L8001MW]
CHNL# 221: [L3001MW]
250.00
500.00
1000.0
0.0
-250.0
-1000.
0.0
1.0000
2.0000
3.0000
4.0000
5.0000
6.0000
7.0000
8.0000
9.0000
10.000
TIME (SECONDS)
THU, JAN 29 2009 15:52
LINE FLOW MW

2013 WINTER PEAK STORA MIN
NS-NB=0; NB-NE=500; CBX=732; ONI=961 ONS=851
3 PHASE FAULT ON L6007 AT BURNSIDE
CLEARED IN 6 CYCLES FROM BURNSIDE
FILE: a119-l6007_108H_3ph_recl-2013WP-NS-0.out
CHNL# 154: [IR141-DIGBYH69.0 VOLTS]
CHNL# 153: [IR137-STATIG25.0 VOLTS]
CHNL# 152: [IR114-GLENDH138.0 VOLTS]
CHNL# 151: [IR84-DALHOHV230.0 VOLTS]
CHNL# 150: [IR82_NUTBHV69.0 VOLTS]
CHNL# 149: [IR45_AMHERTP138.0 VOLTS]
1.2000
0.70000
0.0
1.0000
2.0000
3.0000
4.0000
5.0000
6.0000
7.0000
8.0000
9.0000
10.000
TIME (SECONDS)
THU, JAN 29 2009 15:52
WIND BUS VOLTS

2013 WINTER PEAK STORA MIN
NS-NB=0; NB-NE=500; CBX=732; ONI=961 ONS=851
3 PHASE FAULT ON L6007 AT BURNSIDE PRIMARY PROTECTION FAILS
CLEARED IN 6 CYCLES FROM BURNSIDE
FILE: a119F-l6007_108H_3ph_recl-2013WP-NS-0.out
CHNL#S 20.4: [ANGL199169 [TUFTCV3 14.400] [3]] [ANGL156661 [DARL G1 22.000] [1
CHNL#S 17.4: [ANGL199086 [TRENTON613.800] [6]] [ANGL156661 [DARL G1 22.000] [1
CHNL#S 16.4: [ANGL199085 [TRENTN5 13.800] [5]] [ANGL156661 [DARL G1 22.000] [1
CHNL#S 15.4: [ANGL199061 [TMP1 STO13.800] [1]] [ANGL156661 [DARL G1 22.000] [1
CHNL#S 13.4: [ANGL199043 [ACONIG1 20.000] [1]] [ANGL156661 [DARL G1 22.000] [1
CHNL#S 11.4: [ANGL199001 [LINGAN1 14.400] [1]] [ANGL156661 [DARL G1 22.000] [1
TIME (SECONDS)
THU, JAN 29 2009 15:52
NS ANGLE

2013 WINTER PEAK STORA MIN
NS-NB=0; NB-NE=500; CBX=732; ONI=961 ONS=851
3 PHASE FAULT ON L6007 AT BURNSIDE PRIMARY PROTECTION FAILS
CLEARED IN 6 CYCLES FROM BURNSIDE
FILE: a119F-l6007_108H_3ph_recl-2013WP-NS-0.out
CHNL#S 10.4: [ANGL190472 [BLLDNG2 19.000] [1]] [ANGL156661 [DARL G1 22.000] [1
CHNL#S 6.4: [ANGL190456 [LEPRG1 26.000] [1]] [ANGL156661 [DARL G1 22.000] [1
CHNL#S 5.4: [ANGL190450 [MACTG1 13.800] [1]] [ANGL156661 [DARL G1 22.000] [1
CHNL#S 3.4: [ANGL126652 [RAV 3 22.000] [1]] [ANGL156661 [DARL G1 22.000] [1
CHNL#S 2.4: [ANGL101063 [MYST G7 22.000] [1]] [ANGL156661 [DARL G1 22.000] [1
CHNL#S 7.4: [ANGL190457 [C.CVG1 19.000] [1]] [ANGL156661 [DARL G1 22.000] [1
TIME (SECONDS)
THU, JAN 29 2009 15:52
"NE,NY,NB ANGLE"

2013 WINTER PEAK STORA MIN
NS-NB=0; NB-NE=500; CBX=732; ONI=961 ONS=851
3 PHASE FAULT ON L6007 AT BURNSIDE PRIMARY PROTECTION FAILS
CLEARED IN 6 CYCLES FROM BURNSIDE
FILE: a119F-l6007_108H_3ph_recl-2013WP-NS-0.out
CHNL# 59: [POWER199169 [TUFTCV3 14.400] [3]]
CHNL# 56: [POWER199086 [TRENTON613.800] [6]]
CHNL# 55: [POWER199085 [TRENTN5 13.800] [5]]
CHNL# 54: [POWER199061 [TMP1 STO13.800] [1]]
CHNL# 52: [POWER199043 [ACONIG1 20.000] [1]]
CHNL# 50: [POWER199001 [LINGAN1 14.400] [1]]
TIME (SECONDS)
THU, JAN 29 2009 15:52
NS MW

2013 WINTER PEAK STORA MIN
NS-NB=0; NB-NE=500; CBX=732; ONI=961 ONS=851
3 PHASE FAULT ON L6007 AT BURNSIDE PRIMARY PROTECTION FAILS
CLEARED IN 6 CYCLES FROM BURNSIDE
FILE: a119F-l6007_108H_3ph_recl-2013WP-NS-0.out
CHNL# 49: [POWER190472 [BLLDNG2 19.000] [1]]
CHNL# 45: [POWER190456 [LEPRG1 26.000] [1]]
CHNL# 44: [POWER190450 [MACTG1 13.800] [1]]
CHNL# 42: [POWER126652 [RAV 3 22.000] [1]]
CHNL# 41: [POWER101063 [MYST G7 22.000] [1]]
CHNL# 46: [POWER190457 [C.CVG1 19.000] [1]]
TIME (SECONDS)
THU, JAN 29 2009 15:52
"NE,NY,NB POWER"

2013 WINTER PEAK STORA MIN
NS-NB=0; NB-NE=500; CBX=732; ONI=961 ONS=851
3 PHASE FAULT ON L6007 AT BURNSIDE PRIMARY PROTECTION FAILS
CLEARED IN 6 CYCLES FROM BURNSIDE
FILE: a119F-l6007_108H_3ph_recl-2013WP-NS-0.out
CHNL# 119: [VARS IR141-DIGBY]
CHNL# 118: [VARS IR137-STATIA]
CHNL# 117: [VARS IR114-GLENDHU]
CHNL# 116: [VARS IR84-DALHOUSIE]
CHNL# 115: [VARS IR82_NUTTBY]
CHNL# 114: [VARS IR45_AMHERST]
TIME (SECONDS)
THU, JAN 29 2009 15:52
NS WIND MV

2013 WINTER PEAK STORA MIN
NS-NB=0; NB-NE=500; CBX=732; ONI=961 ONS=851
3 PHASE FAULT ON L6007 AT BURNSIDE PRIMARY PROTECTION FAILS
CLEARED IN 6 CYCLES FROM BURNSIDE
FILE: a119F-l6007_108H_3ph_recl-2013WP-NS-0.out
CHNL# 79: [POWER IR141-DIGBY]
CHNL# 78: [POWER IR137-STATIA]
CHNL# 77: [POWER IR114-GLENDHU]
CHNL# 76: [POWER IR84-DALHOUSIE]
CHNL# 75: [POWER IR82_NUTTBY]
CHNL# 74: [POWER IR45_AMHERST]
TIME (SECONDS)
THU, JAN 29 2009 15:52
NS WIND MW

2013 WINTER PEAK STORA MIN
NS-NB=0; NB-NE=500; CBX=732; ONI=961 ONS=851
3 PHASE FAULT ON L6007 AT BURNSIDE PRIMARY PROTECTION FAILS
CLEARED IN 6 CYCLES FROM BURNSIDE
FILE: a119F-l6007_108H_3ph_recl-2013WP-NS-0.out
CHNL# 133: [VOLT199125 IONSLOW 345.00]
CHNL# 132: [VOLT199120 IHOPEWELL345.00]
CHNL# 131: [VOLT199045 IWOODBINE345.00]
CHNL# 130: [VOLT190320 ISALBRY 345.00]
CHNL# 128: [VOLT190004 IKESWICK 345.00]
CHNL# 127: [VOLT 70002 IORRINGTN345.00]
TIME (SECONDS)
THU, JAN 29 2009 15:52
"345KV VOLTAGE"

2013 WINTER PEAK STORA MIN
NS-NB=0; NB-NE=500; CBX=732; ONI=961 ONS=851
3 PHASE FAULT ON L6007 AT BURNSIDE PRIMARY PROTECTION FAILS
CLEARED IN 6 CYCLES FROM BURNSIDE
FILE: a119F-l6007_108H_3ph_recl-2013WP-NS-0.out
CHNL# 125: 60*(1+[FREQ199125 IONSLOW 345.00])
CHNL# 124: 60*(1+[FREQ199120 IHOPEWELL345.00])
CHNL# 123: 60*(1+[FREQ199045 IWOODBINE345.00])
CHNL# 122: 60*(1+[FREQ190320 ISALBRY 345.00])
CHNL# 121: 60*(1+[FREQ190197 IC.COVE 345.00])
CHNL# 120: 60*(1+[FREQ 70002 IORRINGTN345.00])
TIME (SECONDS)
THU, JAN 29 2009 15:52
FREQUENCY HZ

2013 WINTER PEAK STORA MIN
NS-NB=0; NB-NE=500; CBX=732; ONI=961 ONS=851
3 PHASE FAULT ON L6007 AT BURNSIDE PRIMARY PROTECTION FAILS
CLEARED IN 6 CYCLES FROM BURNSIDE
FILE: a119F-l6007_108H_3ph_rect-2013WP-NS-0.out
CHNL# 145: [VOLT199193 [HHWAS_138.00]]
CHNL# 144: [VOLT199165 [TUFTCOVE138.00]]
CHNL# 143: [VOLT199138 [SPRNGHILL138.00]]
CHNL# 142: [VOLT199090 [SONTREN138.00]]
CHNL# 141: [VOLT199051 [HASTINGS138.00]]
CHNL# 146: [VOLT199280 [TUSKET A138.00]]
THU, JAN 29 2009 15:52
138KV BUS VOLTS
TIME (SECONDS)

2013 WINTER PEAK STORA MIN
NS-NB=0; NB-NE=500; CBX=732; ONI=961 ONS=851
3 PHASE FAULT ON L6007 AT BURNSIDE PRIMARY PROTECTION FAILS
CLEARED IN 6 CYCLES FROM BURNSIDE
FILE: a119F-l6007_108H_3ph_rect-2013WP-NS-0.out
CHNL# 139: [VOLT199200 [BRUSHY 230.00]]
CHNL# 138: [VOLT199130 [ONSLOW 230.00]]
CHNL# 137: [VOLT199050 [HASTINGS230.00]]
CHNL# 136: [VOLT199044 [PT.ACONI230.00]]
CHNL# 135: [VOLT199000 [LINGAN 230.00]]
CHNL# 140: [VOLT199240 [BWATER A230.00]]
THU, JAN 29 2009 15:52
230KV BUS VOLTS
TIME (SECONDS)

2013 WINTER PEAK STORA MIN
NS-NB=0; NB-NE=500; CBX=732; ONI=961 ONS=851
3 PHASE FAULT ON L6007 AT BURNSIDE PRIMARY PROTECTION FAILS
CLEARED IN 6 CYCLES FROM BURNSIDE
FILE: a119F-l6007_108H_3ph_rect-2013WP-NS-0.out
CHNL# 197: [L8003MW]
CHNL# 195: [L8004MW]
CHNL# 193: [L8001MW]
CHNL# 221: [L3001MW]
CHNL# 215: [L6503MW]
CHNL# 217: [L6533MW]
THU, JAN 29 2009 15:52
LINE FLOW MW
TIME (SECONDS)

2013 WINTER PEAK STORA MIN
NS-NB=0; NB-NE=500; CBX=732; ONI=961 ONS=851
3 PHASE FAULT ON L6007 AT BURNSIDE PRIMARY PROTECTION FAILS
CLEARED IN 6 CYCLES FROM BURNSIDE
FILE: a119F-l6007_108H_3ph_rect-2013WP-NS-0.out
CHNL# 152: [R114-GLENDH138.0 VOLTS]
CHNL# 151: [R84-DALHOHV230.0 VOLTS]
CHNL# 150: [R82_NUTBHV69.0 VOLTS]
CHNL# 149: [R45_ANHERTP138.0 VOLTS]
CHNL# 153: [R137-STATIG25.0 VOLTS]
CHNL# 154: [R141-DIGBYH69.0 VOLTS]
THU, JAN 29 2009 15:52
WIND BUS VOLTS
TIME (SECONDS)

2013 WINTER PEAK STORA MIN
NS-NB=0; NB-NE=500; CBX=732; ONI=961 ONS=851
3 PHASE FAULT ON L6008 AT 108H-LAK
CLEARED IN 6 CYCLES - RECLOSE ATTEMPT IN 5 SEC FROM 91H
FILE: a120-l6008_103H_3ph_recl-2013WP-NS-0.out
CHNL#S 20,4: [ANGL199169 [TUFTCV3 14.400] [3]] [ANGL156661 [DARL G1 22.000] [1]
CHNL#S 17,4: [ANGL199086 [TRENTON613.800] [6]] [ANGL156661 [DARL G1 22.000] [1]
CHNL#S 16,4: [ANGL199085 [TRENTN5 13.800] [5]] [ANGL156661 [DARL G1 22.000] [1]
CHNL#S 15,4: [ANGL199061 [TMP1 STO13.800] [1]] [ANGL156661 [DARL G1 22.000] [1]
CHNL#S 13,4: [ANGL199043 [ACONIG1 20.000] [1]] [ANGL156661 [DARL G1 22.000] [1]
CHNL#S 11,4: [ANGL199001 [LINGAN1 14.400] [1]] [ANGL156661 [DARL G1 22.000] [1]
100.00
-100.0
50.000
-150.0
0.0
1.0000
2.0000
3.0000
4.0000
5.0000
6.0000
7.0000
8.0000
9.0000
10.000
TIME (SECONDS)
THU, JAN 29 2009 15:52
NS ANGLE

2013 WINTER PEAK STORA MIN
NS-NB=0; NB-NE=500; CBX=732; ONI=961 ONS=851
3 PHASE FAULT ON L6008 AT 108H-LAK
CLEARED IN 6 CYCLES - RECLOSE ATTEMPT IN 5 SEC FROM 91H
FILE: a120-l6008_103H_3ph_recl-2013WP-NS-0.out
CHNL#S 10,4: [ANGL190472 [BLLDNG2 19.000] [1]] [ANGL156661 [DARL G1 22.000] [1]
CHNL#S 6,4: [ANGL190456 [LEPRG1 26.000] [1]] [ANGL156661 [DARL G1 22.000] [1]
CHNL#S 5,4: [ANGL190450 [MACTG1 13.800] [1]] [ANGL156661 [DARL G1 22.000] [1]
CHNL#S 3,4: [ANGL126652 [RAV 3 22.000] [1]] [ANGL156661 [DARL G1 22.000] [1]
CHNL#S 2,4: [ANGL101063 [MYST G7 22.000] [1]] [ANGL156661 [DARL G1 22.000] [1]
CHNL#S 7,4: [ANGL190457 [C.CVG1 19.000] [1]] [ANGL156661 [DARL G1 22.000] [1]
100.00
-100.0
0.0
1.0000
2.0000
3.0000
4.0000
5.0000
6.0000
7.0000
8.0000
9.0000
10.000
TIME (SECONDS)
THU, JAN 29 2009 15:52
"NE,NY,NB ANGLE"

2013 WINTER PEAK STORA MIN
NS-NB=0; NB-NE=500; CBX=732; ONI=961 ONS=851
3 PHASE FAULT ON L6008 AT 108H-LAK
CLEARED IN 6 CYCLES - RECLOSE ATTEMPT IN 5 SEC FROM 91H
FILE: a120-l6008_103H_3ph_recl-2013WP-NS-0.out
CHNL# 59: [POWER199169 [TUFTCV3 14.400] [3]]
CHNL# 56: [POWER199086 [TRENTON613.800] [6]]
CHNL# 55: [POWER199085 [TRENTN5 13.800] [5]]
CHNL# 54: [POWER199061 [TMP1 STO13.800] [1]]
CHNL# 52: [POWER199043 [ACONIG1 20.000] [1]]
CHNL# 50: [POWER199001 [LINGAN1 14.400] [1]]
2.5000
1.0000
-1.500
0.0
0.0
1.0000
2.0000
3.0000
4.0000
5.0000
6.0000
7.0000
8.0000
9.0000
10.000
TIME (SECONDS)
THU, JAN 29 2009 15:52
NS MW

2013 WINTER PEAK STORA MIN
NS-NB=0; NB-NE=500; CBX=732; ONI=961 ONS=851
3 PHASE FAULT ON L6008 AT 108H-LAK
CLEARED IN 6 CYCLES - RECLOSE ATTEMPT IN 5 SEC FROM 91H
FILE: a120-l6008_103H_3ph_recl-2013WP-NS-0.out
CHNL# 49: [POWER190472 [BLLDNG2 19.000] [1]]
CHNL# 45: [POWER190456 [LEPRG1 26.000] [1]]
CHNL# 44: [POWER190450 [MACTG1 13.800] [1]]
CHNL# 42: [POWER126652 [RAV 3 22.000] [1]]
CHNL# 41: [POWER101063 [MYST G7 22.000] [1]]
CHNL# 46: [POWER190457 [C.CVG1 19.000] [1]]
7.0000
9.0000
5.0000
5.0000
6.5000
5.0000
2.0000
4.0000
0.0
0.0
1.0000
0.0
0.0
1.0000
2.0000
3.0000
4.0000
5.0000
6.0000
7.0000
8.0000
9.0000
10.000
TIME (SECONDS)
THU, JAN 29 2009 15:52
"NE,NY,NB POWER"

2013 WINTER PEAK STORA MIN
NS-NB=0; NB-NE=500; CBX=732; ONI=961 ONS=851
3 PHASE FAULT ON L6008 AT 108H-LAK
CLEARED IN 6 CYCLES - RECLOSE ATTEMPT IN 5 SEC FROM 91H
FILE: a120-l6008_103H_3ph_recl-2013WP-NS-0.out
CHNL# 119: [VARS IR141-DIGBY]
CHNL# 118: [VARS IR137-STATIA]
CHNL# 117: [VARS IR114-GLENDHU]
CHNL# 116: [VARS IR84-DALHOUSIE]
CHNL# 115: [VARS IR82_NUTTBY]
CHNL# 114: [VARS IR45_AMHERST]
TIME (SECONDS)
THU, JAN 29 2009 15:52
NS WIND MV

2013 WINTER PEAK STORA MIN
NS-NB=0; NB-NE=500; CBX=732; ONI=961 ONS=851
3 PHASE FAULT ON L6008 AT 108H-LAK
CLEARED IN 6 CYCLES - RECLOSE ATTEMPT IN 5 SEC FROM 91H
FILE: a120-l6008_103H_3ph_recl-2013WP-NS-0.out
CHNL# 79: [POWER IR141-DIGBY]
CHNL# 78: [POWER IR137-STATIA]
CHNL# 77: [POWER IR114-GLENDHU]
CHNL# 76: [POWER IR84-DALHOUSIE]
CHNL# 75: [POWER IR82_NUTTBY]
CHNL# 74: [POWER IR45_AMHERST]
TIME (SECONDS)
THU, JAN 29 2009 15:52
NS WIND MW

2013 WINTER PEAK STORA MIN
NS-NB=0; NB-NE=500; CBX=732; ONI=961 ONS=851
3 PHASE FAULT ON L6008 AT 108H-LAK
CLEARED IN 6 CYCLES - RECLOSE ATTEMPT IN 5 SEC FROM 91H
FILE: a120-l6008_103H_3ph_recl-2013WP-NS-0.out
CHNL# 133: [VOLT199125 [ONSLOW 345.00]]
CHNL# 132: [VOLT199120 [HOPEWELL 345.00]]
CHNL# 131: [VOLT199045 [WOODBINE345.00]]
CHNL# 130: [VOLT190320 [SALBRY 345.00]]
CHNL# 128: [VOLT190004 [KESWICK 345.00]]
CHNL# 127: [VOLT 70002 [ORRINGTN345.00]]
TIME (SECONDS)
THU, JAN 29 2009 15:52
"345KV VOLTAGE"

2013 WINTER PEAK STORA MIN
NS-NB=0; NB-NE=500; CBX=732; ONI=961 ONS=851
3 PHASE FAULT ON L6008 AT 108H-LAK
CLEARED IN 6 CYCLES - RECLOSE ATTEMPT IN 5 SEC FROM 91H
FILE: a120-l6008_103H_3ph_recl-2013WP-NS-0.out
CHNL# 125: 60*(1+[FREQ199125 [ONSLOW 345.00]])
CHNL# 124: 60*(1+[FREQ199120 [HOPEWELL 345.00]])
CHNL# 123: 60*(1+[FREQ199045 [WOODBINE345.00]])
CHNL# 122: 60*(1+[FREQ190320 [SALBRY 345.00]])
CHNL# 121: 60*(1+[FREQ190197 [C.COVE 345.00]])
CHNL# 120: 60*(1+[FREQ 70002 [ORRINGTN345.00]])
TIME (SECONDS)
THU, JAN 29 2009 15:52
FREQUENCY HZ

2013 WINTER PEAK STORA MIN
NS-NB=0; NB-NE=500; CBX=732; ONI=961 ONS=851
3 PHASE FAULT ON L6008 AT 108H-LAK
CLEARED IN 6 CYCLES - RECLOSE ATTEMPT IN 5 SEC FROM 91H
FILE: a120-l6008_103H_3ph_recl-2013WP-NS-0.out
CHNL# 146: [VOLT199280 [TUSKET A138.00]]
CHNL# 145: [VOLT199193 [1H-WAS 138.00]]
CHNL# 144: [VOLT199165 [TUFTCOVE138.00]]
CHNL# 143: [VOLT199135 [SPRNGHILL138.00]]
CHNL# 142: [VOLT199090 [50N-TREN138.00]]
CHNL# 141: [VOLT199051 [HASTINGS138.00]]
1.2000
0.70000
0.0
1.0000
2.0000
3.0000
4.0000
5.0000
6.0000
7.0000
8.0000
9.0000
10.000
TIME (SECONDS)
THU, JAN 29 2009 15:52
138KV BUS VOLTS

2013 WINTER PEAK STORA MIN
NS-NB=0; NB-NE=500; CBX=732; ONI=961 ONS=851
3 PHASE FAULT ON L6008 AT 108H-LAK
CLEARED IN 6 CYCLES - RECLOSE ATTEMPT IN 5 SEC FROM 91H
FILE: a120-l6008_103H_3ph_recl-2013WP-NS-0.out
CHNL# 140: [VOLT199240 [BWATER A230.00]]
CHNL# 139: [VOLT199200 [BRUSHY 230.00]]
CHNL# 138: [VOLT199130 [ONSLOW 230.00]]
CHNL# 137: [VOLT199050 [HASTINGS230.00]]
CHNL# 136: [VOLT199044 [PT.ACONI230.00]]
CHNL# 135: [VOLT199000 [LINGAN 230.00]]
1.2000
0.70000
0.0
1.0000
2.0000
3.0000
4.0000
5.0000
6.0000
7.0000
8.0000
9.0000
10.000
TIME (SECONDS)
THU, JAN 29 2009 15:52
230KV BUS VOLTS

2013 WINTER PEAK STORA MIN
NS-NB=0; NB-NE=500; CBX=732; ONI=961 ONS=851
3 PHASE FAULT ON L6008 AT 108H-LAK
CLEARED IN 6 CYCLES - RECLOSE ATTEMPT IN 5 SEC FROM 91H
FILE: a120-l6008_103H_3ph_recl-2013WP-NS-0.out
CHNL# 217: [L6533MW]
CHNL# 215: [L6503MW]
CHNL# 197: [L8003MW]
CHNL# 195: [L8004MW]
CHNL# 193: [L8001MW]
CHNL# 221: [L3001MW]
250.00
-250.0
500.00
0.0
1000.0
-1000.
0.70000
0.0
1.0000
2.0000
3.0000
4.0000
5.0000
6.0000
7.0000
8.0000
9.0000
10.000
TIME (SECONDS)
THU, JAN 29 2009 15:52
LINE FLOW MW

2013 WINTER PEAK STORA MIN
NS-NB=0; NB-NE=500; CBX=732; ONI=961 ONS=851
3 PHASE FAULT ON L6008 AT 108H-LAK
CLEARED IN 6 CYCLES - RECLOSE ATTEMPT IN 5 SEC FROM 91H
FILE: a120-l6008_103H_3ph_recl-2013WP-NS-0.out
CHNL# 154: [IR141-DIGBYH69.0 VOLTS]
CHNL# 153: [IR137-STATIG25.0 VOLTS]
CHNL# 152: [IR114-GLENDH138.0 VOLTS]
CHNL# 151: [IR84-DALHOHV230.0 VOLTS]
CHNL# 150: [IR82_NUTBHV69.0 VOLTS]
CHNL# 149: [IR45_AMHERTP138.0 VOLTS]
1.2000
0.70000
0.0
1.0000
2.0000
3.0000
4.0000
5.0000
6.0000
7.0000
8.0000
9.0000
10.000
TIME (SECONDS)
THU, JAN 29 2009 15:52
WIND BUS VOLTS

2013 WINTER PEAK STORA MIN
NS-NB=0; NB-NE=500; CBX=732; ONI=961 ONS=851
3 PHASE FAULT ON L6008 AT 108H-LAK PRIMARY FAILS
CLEARED IN 6 CYCLES - RECLOSE ATTEMPT IN 5 SEC FROM 91H
FILE: a120F-l6008_103H_3ph_recl-2013WP-NS-0.out
CHNL#S 20,4: [ANGL199169 [TUFTCV3 14.400] [3]] [ANGL156661 [DARL G1 22.000] [1]
CHNL#S 17,4: [ANGL199086 [TRENTON613.800] [6]] [ANGL156661 [DARL G1 22.000] [1]
CHNL#S 16,4: [ANGL199085 [TRENTN5 13.800] [5]] [ANGL156661 [DARL G1 22.000] [1]
CHNL#S 15,4: [ANGL199061 [TMP1 STO13.800] [1]] [ANGL156661 [DARL G1 22.000] [1]
CHNL#S 13,4: [ANGL199043 [ACONIG1 20.000] [1]] [ANGL156661 [DARL G1 22.000] [1]
CHNL#S 11,4: [ANGL199001 [LINGAN1 14.400] [1]] [ANGL156661 [DARL G1 22.000] [1]
100.00
-100.0
0.0
1.0000
2.0000
3.0000
4.0000
5.0000
6.0000
7.0000
8.0000
9.0000
10.000
TIME (SECONDS)
THU, JAN 29 2009 15:52
NS ANGLE

2013 WINTER PEAK STORA MIN
NS-NB=0; NB-NE=500; CBX=732; ONI=961 ONS=851
3 PHASE FAULT ON L6008 AT 108H-LAK PRIMARY FAILS
CLEARED IN 6 CYCLES - RECLOSE ATTEMPT IN 5 SEC FROM 91H
FILE: a120F-l6008_103H_3ph_recl-2013WP-NS-0.out
CHNL#S 10,4: [ANGL190472 [BLLDNG2 19.000] [1]] [ANGL156661 [DARL G1 22.000] [1]
CHNL#S 6,4: [ANGL190456 [LEPRG1 26.000] [1]] [ANGL156661 [DARL G1 22.000] [1]
CHNL#S 5,4: [ANGL190450 [MACTG1 13.800] [1]] [ANGL156661 [DARL G1 22.000] [1]
CHNL#S 3,4: [ANGL126652 [RAV 3 22.000] [1]] [ANGL156661 [DARL G1 22.000] [1]
CHNL#S 2,4: [ANGL101063 [MYST G7 22.000] [1]] [ANGL156661 [DARL G1 22.000] [1]
CHNL#S 7,4: [ANGL190457 [C.CVG1 19.000] [1]] [ANGL156661 [DARL G1 22.000] [1]
100.00
-100.0
0.0
1.0000
2.0000
3.0000
4.0000
5.0000
6.0000
7.0000
8.0000
9.0000
10.000
TIME (SECONDS)
THU, JAN 29 2009 15:52
"NE,NY,NB ANGLE"

2013 WINTER PEAK STORA MIN
NS-NB=0; NB-NE=500; CBX=732; ONI=961 ONS=851
3 PHASE FAULT ON L6008 AT 108H-LAK PRIMARY FAILS
CLEARED IN 6 CYCLES - RECLOSE ATTEMPT IN 5 SEC FROM 91H
FILE: a120F-l6008_103H_3ph_recl-2013WP-NS-0.out
CHNL# 59: [POWER199169 [TUFTCV3 14.400] [3]]
CHNL# 56: [POWER199086 [TRENTON613.800] [6]]
CHNL# 55: [POWER199085 [TRENTN5 13.800] [5]]
CHNL# 54: [POWER199061 [TMP1 STO13.800] [1]]
CHNL# 52: [POWER199043 [ACONIG1 20.000] [1]]
CHNL# 50: [POWER199001 [LINGAN1 14.400] [1]]
2.5000
-1.500
0.0
1.0000
2.0000
3.0000
4.0000
5.0000
6.0000
7.0000
8.0000
9.0000
10.000
TIME (SECONDS)
THU, JAN 29 2009 15:52
NS MW

2013 WINTER PEAK STORA MIN
NS-NB=0; NB-NE=500; CBX=732; ONI=961 ONS=851
3 PHASE FAULT ON L6008 AT 108H-LAK PRIMARY FAILS
CLEARED IN 6 CYCLES - RECLOSE ATTEMPT IN 5 SEC FROM 91H
FILE: a120F-l6008_103H_3ph_recl-2013WP-NS-0.out
CHNL# 49: [POWER190472 [BLLDNG2 19.000] [1]]
CHNL# 45: [POWER190456 [LEPRG1 26.000] [1]]
CHNL# 44: [POWER190450 [MACTG1 13.800] [1]]
CHNL# 42: [POWER126652 [RAV 3 22.000] [1]]
CHNL# 41: [POWER101063 [MYST G7 22.000] [1]]
CHNL# 46: [POWER190457 [C.CVG1 19.000] [1]]
7.0000
4.0000
0.0
5.0000
6.5000
1.0000
0.0
1.0000
2.0000
3.0000
4.0000
5.0000
6.0000
7.0000
8.0000
9.0000
10.000
TIME (SECONDS)
THU, JAN 29 2009 15:52
"NE,NY,NB POWER"

2013 WINTER PEAK STORA MIN
NS-NB=0; NB-NE=500; CBX=732; ONI=961 ONS=851
3 PHASE FAULT ON L6008 AT 108H-LAK PRIMARY FAILS
CLEARED IN 6 CYCLES - RECLOSE ATTEMPT IN 5 SEC FROM 91H
FILE: a120F-l6008_103H_3ph_recl-2013WP-NS-0.out
CHNL# 119: [VARS IR141-DIGBY]
CHNL# 118: [VARS IR137-STATIA]
CHNL# 117: [VARS IR114-GLENDHU]
CHNL# 116: [VARS IR84-DALHOUSIE]
CHNL# 115: [VARS IR82_NUTTBY]
CHNL# 114: [VARS IR45_AMHERST]
0.50000
-0.5000
0.0
1.0000
2.0000
3.0000
4.0000
5.0000
6.0000
7.0000
8.0000
9.0000
10.000
TIME (SECONDS)
THU, JAN 29 2009 15:52
NS WIND MV

2013 WINTER PEAK STORA MIN
NS-NB=0; NB-NE=500; CBX=732; ONI=961 ONS=851
3 PHASE FAULT ON L6008 AT 108H-LAK PRIMARY FAILS
CLEARED IN 6 CYCLES - RECLOSE ATTEMPT IN 5 SEC FROM 91H
FILE: a120F-l6008_103H_3ph_recl-2013WP-NS-0.out
CHNL# 79: [POWER IR141-DIGBY]
CHNL# 78: [POWER IR137-STATIA]
CHNL# 77: [POWER IR114-GLENDHU]
CHNL# 76: [POWER IR84-DALHOUSIE]
CHNL# 75: [POWER IR82_NUTTBY]
CHNL# 74: [POWER IR45_AMHERST]
1.0000
0.0
1.0000
2.0000
3.0000
4.0000
5.0000
6.0000
7.0000
8.0000
9.0000
10.000
TIME (SECONDS)
THU, JAN 29 2009 15:52
NS WIND MW

2013 WINTER PEAK STORA MIN
NS-NB=0; NB-NE=500; CBX=732; ONI=961 ONS=851
3 PHASE FAULT ON L6008 AT 108H-LAK PRIMARY FAILS
CLEARED IN 6 CYCLES - RECLOSE ATTEMPT IN 5 SEC FROM 91H
FILE: a120F-l6008_103H_3ph_recl-2013WP-NS-0.out
CHNL# 133: [VOLT199125 [ONSLOW 345.00]]
CHNL# 132: [VOLT199120 [HOPEWELL 345.00]]
CHNL# 131: [VOLT199045 [WOODBINE345.00]]
CHNL# 130: [VOLT190320 [SALBRY 345.00]]
CHNL# 128: [VOLT190004 [KESWICK 345.00]]
CHNL# 127: [VOLT 70002 [ORRINGTN345.00]]
1.1000
0.90000
0.0
1.0000
2.0000
3.0000
4.0000
5.0000
6.0000
7.0000
8.0000
9.0000
10.000
TIME (SECONDS)
THU, JAN 29 2009 15:52
"345KV VOLTAGE"

2013 WINTER PEAK STORA MIN
NS-NB=0; NB-NE=500; CBX=732; ONI=961 ONS=851
3 PHASE FAULT ON L6008 AT 108H-LAK PRIMARY FAILS
CLEARED IN 6 CYCLES - RECLOSE ATTEMPT IN 5 SEC FROM 91H
FILE: a120F-l6008_103H_3ph_recl-2013WP-NS-0.out
CHNL# 125: 60*(1+[FREQ199125 [ONSLOW 345.00]])
CHNL# 124: 60*(1+[FREQ199120 [HOPEWELL 345.00]])
CHNL# 123: 60*(1+[FREQ199045 [WOODBINE345.00]])
CHNL# 122: 60*(1+[FREQ190320 [SALBRY 345.00]])
CHNL# 121: 60*(1+[FREQ190197 [C.COVE 345.00]])
CHNL# 120: 60*(1+[FREQ 70002 [ORRINGTN345.00]])
60.500
59.500
0.0
1.0000
2.0000
3.0000
4.0000
5.0000
6.0000
7.0000
8.0000
9.0000
10.000
TIME (SECONDS)
THU, JAN 29 2009 15:52
FREQUENCY HZ

2013 WINTER PEAK STORA MIN
NS-NB=0; NB-NE=500; CBX=732; ONI=961 ONS=851
3 PHASE FAULT ON L6008 AT 108H-LAK PRIMARY FAILS
CLEARED IN 6 CYCLES - RECLOSE ATTEMPT IN 5 SEC FROM 91H
FILE: a120F-l6008_103H_3ph_recl-2013WP-NS-0.out
CHNL# 146: [VOLT199280 [TUSKET A138.00]]
CHNL# 145: [VOLT199193 [1H-WAS 138.00]]
CHNL# 144: [VOLT199165 [TUFTCOVE138.00]]
CHNL# 143: [VOLT199135 [SPRNGHILL138.00]]
CHNL# 142: [VOLT199090 [50N-TREN138.00]]
CHNL# 141: [VOLT199051 [HASTINGS138.00]]
1.2000
0.70000
0.0
1.0000
2.0000
3.0000
4.0000
5.0000
6.0000
7.0000
8.0000
9.0000
10.000
TIME (SECONDS)
THU, JAN 29 2009 15:52
138KV BUS VOLTS

2013 WINTER PEAK STORA MIN
NS-NB=0; NB-NE=500; CBX=732; ONI=961 ONS=851
3 PHASE FAULT ON L6008 AT 108H-LAK PRIMARY FAILS
CLEARED IN 6 CYCLES - RECLOSE ATTEMPT IN 5 SEC FROM 91H
FILE: a120F-l6008_103H_3ph_recl-2013WP-NS-0.out
CHNL# 140: [VOLT199240 [BWATER A230.00]]
CHNL# 139: [VOLT199200 [BRUSHY 230.00]]
CHNL# 138: [VOLT199130 [ONSLOW 230.00]]
CHNL# 137: [VOLT199050 [HASTINGS230.00]]
CHNL# 136: [VOLT199044 [PT.ACONI230.00]]
CHNL# 135: [VOLT199000 [LINGAN 230.00]]
1.2000
0.70000
0.0
1.0000
2.0000
3.0000
4.0000
5.0000
6.0000
7.0000
8.0000
9.0000
10.000
TIME (SECONDS)
THU, JAN 29 2009 15:52
230KV BUS VOLTS

2013 WINTER PEAK STORA MIN
NS-NB=0; NB-NE=500; CBX=732; ONI=961 ONS=851
3 PHASE FAULT ON L6008 AT 108H-LAK PRIMARY FAILS
CLEARED IN 6 CYCLES - RECLOSE ATTEMPT IN 5 SEC FROM 91H
FILE: a120F-l6008_103H_3ph_recl-2013WP-NS-0.out
CHNL# 217: [L6513MW]
CHNL# 215: [L6503MVI]
CHNL# 197: [L8003MVI]
CHNL# 195: [L8004MVI]
CHNL# 193: [L8001MVI]
CHNL# 221: [L3001MVI]
250.00
500.00
1000.0
0.0
-250.0
-1000.
TIME (SECONDS)
THU, JAN 29 2009 15:52
LINE FLOW MW

2013 WINTER PEAK STORA MIN
NS-NB=0; NB-NE=500; CBX=732; ONI=961 ONS=851
3 PHASE FAULT ON L6008 AT 108H-LAK PRIMARY FAILS
CLEARED IN 6 CYCLES - RECLOSE ATTEMPT IN 5 SEC FROM 91H
FILE: a120F-l6008_103H_3ph_recl-2013WP-NS-0.out
CHNL# 154: [IR141-DIGBYH69.0 VOLTS]
CHNL# 153: [IR137-STATIG25.0 VOLTS]
CHNL# 152: [IR114-GLENDH138.0 VOLTS]
CHNL# 151: [IR84-DALHOHV230.0 VOLTS]
CHNL# 150: [IR82_NUTBHV69.0 VOLTS]
CHNL# 149: [IR45_AMHERTP138.0 VOLTS]
1.2000
0.70000
0.0
1.0000
2.0000
3.0000
4.0000
5.0000
6.0000
7.0000
8.0000
9.0000
10.000
TIME (SECONDS)
THU, JAN 29 2009 15:52
WIND BUS VOLTS

2013 WINTER PEAK STORA MIN
NS-NB=0; NB-NE=500; CBX=732; ONI=961 ONS=851
3 PHASE FAULT ON L6010 AT 120H-BRUSHYHILL
CLEARED IN 6 CYCLES - RECLOSE ATTEMPT IN 3 SEC FROM 120H
FILE: a121-l6010_120H_3ph_recl-2013WP-NS-0.out
CHNL#S 20.4: [ANGL199169 [TUFTCV3 14.400] [3]] [ANGL156661 [DARL G1 22.000] [1]
CHNL#S 17.4: [ANGL199086 [TRENTON613.800] [6]] [ANGL156661 [DARL G1 22.000] [1]
CHNL#S 16.4: [ANGL199085 [TRENTN5 13.800] [5]] [ANGL156661 [DARL G1 22.000] [1]
CHNL#S 15.4: [ANGL199061 [TMP1 STO13.800] [1]] [ANGL156661 [DARL G1 22.000] [1]
CHNL#S 13.4: [ANGL199043 [ACONIG1 20.000] [1]] [ANGL156661 [DARL G1 22.000] [1]
CHNL#S 11.4: [ANGL199001 [LINGAN1 14.400] [1]] [ANGL156661 [DARL G1 22.000] [1]
TIME (SECONDS)
THU, JAN 29 2009 15:52
NS ANGLE

2013 WINTER PEAK STORA MIN
NS-NB=0; NB-NE=500; CBX=732; ONI=961 ONS=851
3 PHASE FAULT ON L6010 AT 120H-BRUSHYHILL
CLEARED IN 6 CYCLES - RECLOSE ATTEMPT IN 3 SEC FROM 120H
FILE: a121-l6010_120H_3ph_recl-2013WP-NS-0.out
CHNL#S 10.4: [ANGL190472 [BLLDNG2 19.000] [1]] [ANGL156661 [DARL G1 22.000] [1]
CHNL#S 6.4: [ANGL190456 [LEPRG1 26.000] [1]] [ANGL156661 [DARL G1 22.000] [1]
CHNL#S 5.4: [ANGL190450 [MACTG1 13.800] [1]] [ANGL156661 [DARL G1 22.000] [1]
CHNL#S 3.4: [ANGL126652 [RAV 3 22.000] [1]] [ANGL156661 [DARL G1 22.000] [1]
CHNL#S 2.4: [ANGL101063 [MYST G7 22.000] [1]] [ANGL156661 [DARL G1 22.000] [1]
CHNL#S 7.4: [ANGL190457 [C.CVG1 19.000] [1]] [ANGL156661 [DARL G1 22.000] [1]
TIME (SECONDS)
THU, JAN 29 2009 15:52
"NE,NY,NB ANGLE"

2013 WINTER PEAK STORA MIN
NS-NB=0; NB-NE=500; CBX=732; ONI=961 ONS=851
3 PHASE FAULT ON L6010 AT 120H-BRUSHYHILL
CLEARED IN 6 CYCLES - RECLOSE ATTEMPT IN 3 SEC FROM 120H
FILE: a121-l6010_120H_3ph_recl-2013WP-NS-0.out
CHNL# 59: [POWER199169 [TUFTCV3 14.400] [3]]
CHNL# 56: [POWER199086 [TRENTON613.800] [6]]
CHNL# 55: [POWER199085 [TRENTN5 13.800] [5]]
CHNL# 54: [POWER199061 [TMP1 STO13.800] [1]]
CHNL# 52: [POWER199043 [ACONIG1 20.000] [1]]
CHNL# 50: [POWER199001 [LINGAN1 14.400] [1]]
TIME (SECONDS)
THU, JAN 29 2009 15:52
NS MW

2013 WINTER PEAK STORA MIN
NS-NB=0; NB-NE=500; CBX=732; ONI=961 ONS=851
3 PHASE FAULT ON L6010 AT 120H-BRUSHYHILL
CLEARED IN 6 CYCLES - RECLOSE ATTEMPT IN 3 SEC FROM 120H
FILE: a121-l6010_120H_3ph_recl-2013WP-NS-0.out
CHNL# 49: [POWER190472 [BLLDNG2 19.000] [1]]
CHNL# 45: [POWER190456 [LEPRG1 26.000] [1]]
CHNL# 44: [POWER190450 [MACTG1 13.800] [1]]
CHNL# 42: [POWER126652 [RAV 3 22.000] [1]]
CHNL# 41: [POWER101063 [MYST G7 22.000] [1]]
CHNL# 46: [POWER190457 [C.CVG1 19.000] [1]]
TIME (SECONDS)
THU, JAN 29 2009 15:52
"NE,NY,NB POWER"

2013 WINTER PEAK STORA MIN
NS-NB=0; NB-NE=500; CBX=732; ONI=961 ONS=851
3 PHASE FAULT ON L6010 AT 120H-BRUSHYHILL
CLEARED IN 6 CYCLES - RECLOSE ATTEMPT IN 3 SEC FROM 120H
FILE: a121-l6010_120H_3ph_recl-2013WP-NS-0.out
CHNL# 119: [VARS IR141-DIGBY]
CHNL# 118: [VARS IR137-STATIA]
CHNL# 117: [VARS IR114-GLENDHU]
CHNL# 116: [VARS IR84-DALHOUSIE]
CHNL# 115: [VARS IR82_NUTTBY]
CHNL# 114: [VARS IR45_AMHERST]
0.50000
-0.5000
0.0
1.0000
2.0000
3.0000
4.0000
5.0000
6.0000
7.0000
8.0000
9.0000
10.000
TIME (SECONDS)
THU, JAN 29 2009 15:52
NS WIND MV

2013 WINTER PEAK STORA MIN
NS-NB=0; NB-NE=500; CBX=732; ONI=961 ONS=851
3 PHASE FAULT ON L6010 AT 120H-BRUSHYHILL
CLEARED IN 6 CYCLES - RECLOSE ATTEMPT IN 3 SEC FROM 120H
FILE: a121-l6010_120H_3ph_recl-2013WP-NS-0.out
CHNL# 79: [POWER IR141-DIGBY]
CHNL# 78: [POWER IR137-STATIA]
CHNL# 77: [POWER IR114-GLENDHU]
CHNL# 76: [POWER IR84-DALHOUSIE]
CHNL# 75: [POWER IR82_NUTTBY]
CHNL# 74: [POWER IR45_AMHERST]
1.0000
0.0
0.0
1.0000
2.0000
3.0000
4.0000
5.0000
6.0000
7.0000
8.0000
9.0000
10.000
TIME (SECONDS)
THU, JAN 29 2009 15:52
NS WIND MW

2013 WINTER PEAK STORA MIN
NS-NB=0; NB-NE=500; CBX=732; ONI=961 ONS=851
3 PHASE FAULT ON L6010 AT 120H-BRUSHYHILL
CLEARED IN 6 CYCLES - RECLOSE ATTEMPT IN 3 SEC FROM 120H
FILE: a121-l6010_120H_3ph_recl-2013WP-NS-0.out
CHNL# 133: [VOLT199125 IONSLOW 345.00]
CHNL# 132: [VOLT199120 [HOPEWELL 345.00]
CHNL# 131: [VOLT199045 [WOODBINE345.00]
CHNL# 130: [VOLT190320 [SALBRY 345.00]
CHNL# 128: [VOLT190004 [KESWICK 345.00]
CHNL# 127: [VOLT 70002 [ORRINGTN345.00]
1.1000
0.90000
0.0
1.0000
2.0000
3.0000
4.0000
5.0000
6.0000
7.0000
8.0000
9.0000
10.000
TIME (SECONDS)
THU, JAN 29 2009 15:52
"345KV VOLTAGE"

2013 WINTER PEAK STORA MIN
NS-NB=0; NB-NE=500; CBX=732; ONI=961 ONS=851
3 PHASE FAULT ON L6010 AT 120H-BRUSHYHILL
CLEARED IN 6 CYCLES - RECLOSE ATTEMPT IN 3 SEC FROM 120H
FILE: a121-l6010_120H_3ph_recl-2013WP-NS-0.out
CHNL# 125: 60*(1+[FREQ199125 [ONSLOW 345.00])
CHNL# 124: 60*(1+[FREQ199120 [HOPEWELL 345.00])
CHNL# 123: 60*(1+[FREQ199045 [WOODBINE345.00])
CHNL# 122: 60*(1+[FREQ190320 [SALBRY 345.00])
CHNL# 121: 60*(1+[FREQ190197 [C.COVE 345.00])
CHNL# 120: 60*(1+[FREQ 70002 [ORRINGTN345.00])
60.500
59.500
0.0
1.0000
2.0000
3.0000
4.0000
5.0000
6.0000
7.0000
8.0000
9.0000
10.000
TIME (SECONDS)
THU, JAN 29 2009 15:52
FREQUENCY HZ

2013 WINTER PEAK STORA MIN
NS-NB=0; NB-NE=500; CBX=732; ONI=961 ONS=851
3 PHASE FAULT ON L6010 AT 120H-BRUSHYHILL
CLEARED IN 6 CYCLES - RECLOSE ATTEMPT IN 3 SEC FROM 120H
FILE: a121-l6010_120H_3ph_recl-2013WP-NS-0.out
CHNL# 146: [VOLT199280 [TUSKET A138.00]]
CHNL# 145: [VOLT199193 [HHWAS 138.00]]
CHNL# 144: [VOLT199165 [TUFTCOVE138.00]]
CHNL# 143: [VOLT199138: [SPRNGHILL138.00]]
CHNL# 142: [VOLT199090 [SON-TREN138.00]]
CHNL# 141: [VOLT199051 [HASTINGS138.00]]
TIME (SECONDS)
THU, JAN 29 2009 15:52
138KV BUS VOLTS

2013 WINTER PEAK STORA MIN
NS-NB=0; NB-NE=500; CBX=732; ONI=961 ONS=851
3 PHASE FAULT ON L6010 AT 120H-BRUSHYHILL
CLEARED IN 6 CYCLES - RECLOSE ATTEMPT IN 3 SEC FROM 120H
FILE: a121-l6010_120H_3ph_recl-2013WP-NS-0.out
CHNL# 140: [VOLT199240 [BWATER A230.00]]
CHNL# 139: [VOLT199200 [BRUSHY 230.00]]
CHNL# 138: [VOLT199130 [ONSLOW 230.00]]
CHNL# 137: [VOLT199050 [HASTINGS230.00]]
CHNL# 136: [VOLT199044 [PT.ACONI230.00]]
CHNL# 135: [VOLT199000 [LINGAN 230.00]]
TIME (SECONDS)
THU, JAN 29 2009 15:52
230KV BUS VOLTS

2013 WINTER PEAK STORA MIN
NS-NB=0; NB-NE=500; CBX=732; ONI=961 ONS=851
3 PHASE FAULT ON L6010 AT 120H-BRUSHYHILL
CLEARED IN 6 CYCLES - RECLOSE ATTEMPT IN 3 SEC FROM 120H
FILE: a121-l6010_120H_3ph_recl-2013WP-NS-0.out
CHNL# 217: [L6533MW]
CHNL# 215: [L6503MW]
CHNL# 197: [L8003MW]
CHNL# 195: [L8004MW]
CHNL# 193: [L8001MW]
CHNL# 221: [L3001MW]
TIME (SECONDS)
THU, JAN 29 2009 15:52
LINE FLOW MW

2013 WINTER PEAK STORA MIN
NS-NB=0; NB-NE=500; CBX=732; ONI=961 ONS=851
3 PHASE FAULT ON L6010 AT 120H-BRUSHYHILL
CLEARED IN 6 CYCLES - RECLOSE ATTEMPT IN 3 SEC FROM 120H
FILE: a121-l6010_120H_3ph_recl-2013WP-NS-0.out
CHNL# 154: [IR141-DIGBYH69.0 VOLTS]
CHNL# 153: [IR137-STATIG25.0 VOLTS]
CHNL# 152: [IR114-GLENDH138.0 VOLTS]
CHNL# 151: [IR84-DALHOHV230.0 VOLTS]
CHNL# 150: [IR82 NUTBHV69.0 VOLTS]
CHNL# 149: [IR45 AMHERTP138.0 VOLTS]
TIME (SECONDS)
THU, JAN 29 2009 15:52
WIND BUS VOLTS

2013 WINTER PEAK STORA MIN
NS-NB=0; NB-NE=500; CBX=732; ONI=961 ONS=851
3 PHASE FAULT ON L6010 AT 120H-BRUSHYHILL PRIMARY FAILS
CLEARED IN 6 CYCLES - RECLOSE ATTEMPT IN 3 SEC FROM 120H
FILE: a121F-l6010_120H_3ph_recl-2013WP-NS-0.out
CHNL#S 20.4: [ANGL199169 [TUFTCV3 14.400] [3]] [ANGL156661 [DARL G1 22.000] [1]
CHNL#S 17.4: [ANGL199086 [TRENTON613.800] [6]] [ANGL156661 [DARL G1 22.000] [1]
CHNL#S 16.4: [ANGL199085 [TRENTN5 13.800] [5]] [ANGL156661 [DARL G1 22.000] [1]
CHNL#S 15.4: [ANGL199061 [TMP1 STO13.800] [1]] [ANGL156661 [DARL G1 22.000] [1]
CHNL#S 13.4: [ANGL199043 [ACONIG1 20.000] [1]] [ANGL156661 [DARL G1 22.000] [1]
CHNL#S 11.4: [ANGL199001 [LINGAN1 14.400] [1]] [ANGL156661 [DARL G1 22.000] [1]
100.00
-100.0
0.0
1.0000
2.0000
3.0000
4.0000
5.0000
6.0000
7.0000
8.0000
9.0000
10.000
TIME (SECONDS)
THU, JAN 29 2009 15:52
NS ANGLE

2013 WINTER PEAK STORA MIN
NS-NB=0; NB-NE=500; CBX=732; ONI=961 ONS=851
3 PHASE FAULT ON L6010 AT 120H-BRUSHYHILL PRIMARY FAILS
CLEARED IN 6 CYCLES - RECLOSE ATTEMPT IN 3 SEC FROM 120H
FILE: a121F-l6010_120H_3ph_recl-2013WP-NS-0.out
CHNL#S 10.4: [ANGL190472 [BLLDNG2 19.000] [1]] [ANGL156661 [DARL G1 22.000] [1]
CHNL#S 6.4: [ANGL190456 [LEPRG1 26.000] [1]] [ANGL156661 [DARL G1 22.000] [1]
CHNL#S 5.4: [ANGL190450 [MACTG1 13.800] [1]] [ANGL156661 [DARL G1 22.000] [1]
CHNL#S 3.4: [ANGL126652 [RAV 3 22.000] [1]] [ANGL156661 [DARL G1 22.000] [1]
CHNL#S 2.4: [ANGL101063 [MYST G7 22.000] [1]] [ANGL156661 [DARL G1 22.000] [1]
CHNL#S 7.4: [ANGL190457 [C.CVG1 19.000] [1]] [ANGL156661 [DARL G1 22.000] [1]
100.00
-100.0
0.0
1.0000
2.0000
3.0000
4.0000
5.0000
6.0000
7.0000
8.0000
9.0000
10.000
TIME (SECONDS)
THU, JAN 29 2009 15:52
"NE,NY,NB ANGLE"

2013 WINTER PEAK STORA MIN
NS-NB=0; NB-NE=500; CBX=732; ONI=961 ONS=851
3 PHASE FAULT ON L6010 AT 120H-BRUSHYHILL PRIMARY FAILS
CLEARED IN 6 CYCLES - RECLOSE ATTEMPT IN 3 SEC FROM 120H
FILE: a121F-l6010_120H_3ph_recl-2013WP-NS-0.out
CHNL# 56: [POWER199086 [TRENTON613.800] [6]]
CHNL# 55: [POWER199085 [TRENTN5 13.800] [5]]
CHNL# 54: [POWER199061 [TMP1 STO13.800] [1]]
CHNL# 52: [POWER199043 [ACONIG1 20.000] [1]]
CHNL# 50: [POWER199001 [LINGAN1 14.400] [1]]
2.5000
1.0000
-1.500
0.0
0.0
1.0000
2.0000
3.0000
4.0000
5.0000
6.0000
7.0000
8.0000
9.0000
10.000
TIME (SECONDS)
THU, JAN 29 2009 15:52
NS MW

2013 WINTER PEAK STORA MIN
NS-NB=0; NB-NE=500; CBX=732; ONI=961 ONS=851
3 PHASE FAULT ON L6010 AT 120H-BRUSHYHILL PRIMARY FAILS
CLEARED IN 6 CYCLES - RECLOSE ATTEMPT IN 3 SEC FROM 120H
FILE: a121F-l6010_120H_3ph_recl-2013WP-NS-0.out
CHNL# 49: [POWER190472 [BLLDNG2 19.000] [1]]
CHNL# 45: [POWER190456 [LEPRG1 26.000] [1]]
CHNL# 44: [POWER190450 [MACTG1 13.800] [1]]
CHNL# 42: [POWER126652 [RAV 3 22.000] [1]]
CHNL# 41: [POWER101063 [MYST G7 22.000] [1]]
CHNL# 46: [POWER190457 [C.CVG1 19.000] [1]]
7.0000
9.0000
5.0000
5.0000
6.5000
5.0000
2.0000
4.0000
0.0
0.0
1.0000
0.0
1.0000
2.0000
3.0000
4.0000
5.0000
6.0000
7.0000
8.0000
9.0000
10.000
TIME (SECONDS)
THU, JAN 29 2009 15:52
"NE,NY,NB POWER"

2013 WINTER PEAK STORA MIN
NS-NB=0; NB-NE=500; CBX=732; ONI=961 ONS=851
3 PHASE FAULT ON L6010 AT 120H-BRUSHYHILL PRIMARY FAILS
CLEARED IN 6 CYCLES - RECLOSE ATTEMPT IN 3 SEC FROM 120H
FILE: a121F-l6010_120H_3ph_recl-2013WP-NS-0.out
CHNL# 119: [VARS IR141-DIGBY]
CHNL# 118: [VARS IR137-STATIA]
CHNL# 117: [VARS IR114-GLENDHU]
CHNL# 116: [VARS IR84-DALHOUSIE]
CHNL# 115: [VARS IR82_NUTTBY]
CHNL# 114: [VARS IR45_AMHERST]
0.50000
-0.5000
0.0
1.0000
2.0000
3.0000
4.0000
5.0000
6.0000
7.0000
8.0000
9.0000
10.000
TIME (SECONDS)
THU, JAN 29 2009 15:52
NS WIND MV

2013 WINTER PEAK STORA MIN
NS-NB=0; NB-NE=500; CBX=732; ONI=961 ONS=851
3 PHASE FAULT ON L6010 AT 120H-BRUSHYHILL PRIMARY FAILS
CLEARED IN 6 CYCLES - RECLOSE ATTEMPT IN 3 SEC FROM 120H
FILE: a121F-l6010_120H_3ph_recl-2013WP-NS-0.out
CHNL# 79: [POWER IR141-DIGBY]
CHNL# 78: [POWER IR137-STATIA]
CHNL# 77: [POWER IR114-GLENDHU]
CHNL# 76: [POWER IR84-DALHOUSIE]
CHNL# 75: [POWER IR82_NUTTBY]
CHNL# 74: [POWER IR45_AMHERST]
1.0000
0.0
0.0
1.0000
2.0000
3.0000
4.0000
5.0000
6.0000
7.0000
8.0000
9.0000
10.000
TIME (SECONDS)
THU, JAN 29 2009 15:52
NS WIND MW

2013 WINTER PEAK STORA MIN
NS-NB=0; NB-NE=500; CBX=732; ONI=961 ONS=851
3 PHASE FAULT ON L6010 AT 120H-BRUSHYHILL PRIMARY FAILS
CLEARED IN 6 CYCLES - RECLOSE ATTEMPT IN 3 SEC FROM 120H
FILE: a121F-l6010_120H_3ph_recl-2013WP-NS-0.out
CHNL# 133: [VOLT199125 IONSLOW 345.00]
CHNL# 132: [VOLT199120 [HOPEWELL 345.00]
CHNL# 131: [VOLT199045 [WOODBINE345.00]]
CHNL# 130: [VOLT190320 [SALBRY 345.00]]
CHNL# 128: [VOLT190004 [KESWICK 345.00]]
CHNL# 127: [VOLT 70002 [ORRINGTN345.00]]
1.1000
0.90000
0.0
1.0000
2.0000
3.0000
4.0000
5.0000
6.0000
7.0000
8.0000
9.0000
10.000
TIME (SECONDS)
THU, JAN 29 2009 15:52
"345KV VOLTAGE"

2013 WINTER PEAK STORA MIN
NS-NB=0; NB-NE=500; CBX=732; ONI=961 ONS=851
3 PHASE FAULT ON L6010 AT 120H-BRUSHYHILL PRIMARY FAILS
CLEARED IN 6 CYCLES - RECLOSE ATTEMPT IN 3 SEC FROM 120H
FILE: a121F-l6010_120H_3ph_recl-2013WP-NS-0.out
CHNL# 125: 60*(1+[FREQ199125 [ONSLOW 345.00]])
CHNL# 124: 60*(1+[FREQ199120 [HOPEWELL 345.00]])
CHNL# 123: 60*(1+[FREQ199045 [WOODBINE345.00]])
CHNL# 122: 60*(1+[FREQ190320 [SALBRY 345.00]])
CHNL# 121: 60*(1+[FREQ190197 [C.COVE 345.00]])
CHNL# 120: 60*(1+[FREQ 70002 [ORRINGTN345.00]])
60.500
59.500
0.0
1.0000
2.0000
3.0000
4.0000
5.0000
6.0000
7.0000
8.0000
9.0000
10.000
TIME (SECONDS)
THU, JAN 29 2009 15:52
FREQUENCY HZ

2013 WINTER PEAK STORA MIN
NS-NB=0; NB-NE=500; CBX=732; ONI=961 ONS=851
3 PHASE FAULT ON L6010 AT 120H-BRUSHYHILL PRIMARY FAILS
CLEARED IN 6 CYCLES - RECLOSE ATTEMPT IN 3 SEC FROM 120H
FILE: a121F-l6010_120H_3ph_recl-2013WP-NS-0.out
CHNL# 146: [VOLT199280 [TUSKET A138.00]]
CHNL# 145: [VOLT199193 [HHWAS 138.00]]
CHNL# 144: [VOLT199165 [TUFTCOVE138.00]]
CHNL# 143: [VOLT199138 [SPRNGHILL138.00]]
CHNL# 142: [VOLT199090 [SON-TREN138.00]]
CHNL# 141: [VOLT199051 [HASTINGS138.00]]
1.2000
0.70000
0.0
1.0000
2.0000
3.0000
4.0000
5.0000
6.0000
7.0000
8.0000
9.0000
10.000
TIME (SECONDS)
THU, JAN 29 2009 15:52
138KV BUS VOLTS

2013 WINTER PEAK STORA MIN
NS-NB=0; NB-NE=500; CBX=732; ONI=961 ONS=851
3 PHASE FAULT ON L6010 AT 120H-BRUSHYHILL PRIMARY FAILS
CLEARED IN 6 CYCLES - RECLOSE ATTEMPT IN 3 SEC FROM 120H
FILE: a121F-l6010_120H_3ph_recl-2013WP-NS-0.out
CHNL# 140: [VOLT199240 [BWATER A230.00]]
CHNL# 139: [VOLT199200 [BRUSHY 230.00]]
CHNL# 138: [VOLT199130 [ONSLOW 230.00]]
CHNL# 137: [VOLT199050 [HASTINGS230.00]]
CHNL# 136: [VOLT199044 [PT.ACONI230.00]]
CHNL# 135: [VOLT199000 [LINGAN 230.00]]
1.2000
0.70000
0.0
1.0000
2.0000
3.0000
4.0000
5.0000
6.0000
7.0000
8.0000
9.0000
10.000
TIME (SECONDS)
THU, JAN 29 2009 15:52
230KV BUS VOLTS

2013 WINTER PEAK STORA MIN
NS-NB=0; NB-NE=500; CBX=732; ONI=961 ONS=851
3 PHASE FAULT ON L6010 AT 120H-BRUSHYHILL PRIMARY FAILS
CLEARED IN 6 CYCLES - RECLOSE ATTEMPT IN 3 SEC FROM 120H
FILE: a121F-l6010_120H_3ph_recl-2013WP-NS-0.out
CHNL# 217: [L6513MW]
CHNL# 215: [L6503MW]
CHNL# 197: [L8003MW]
CHNL# 195: [L8004MW]
CHNL# 193: [L8001MW]
CHNL# 221: [L3001MW]
250.00
-250.0
500.00
0.0
1000.0
-1000.
0.0
1.0000
2.0000
3.0000
4.0000
5.0000
6.0000
7.0000
8.0000
9.0000
10.000
TIME (SECONDS)
THU, JAN 29 2009 15:52
LINE FLOW MW

2013 WINTER PEAK STORA MIN
NS-NB=0; NB-NE=500; CBX=732; ONI=961 ONS=851
3 PHASE FAULT ON L6010 AT 120H-BRUSHYHILL PRIMARY FAILS
CLEARED IN 6 CYCLES - RECLOSE ATTEMPT IN 3 SEC FROM 120H
FILE: a121F-l6010_120H_3ph_recl-2013WP-NS-0.out
CHNL# 154: [IR141-DIGBYH69.0 VOLTS]
CHNL# 153: [IR137-STATIG25.0 VOLTS]
CHNL# 152: [IR114-GLENDH138.0 VOLTS]
CHNL# 151: [IR84-DALHOHV230.0 VOLTS]
CHNL# 150: [IR82_NUTBHV69.0 VOLTS]
CHNL# 149: [IR45_AMHERTP138.0 VOLTS]
1.2000
0.70000
0.0
1.0000
2.0000
3.0000
4.0000
5.0000
6.0000
7.0000
8.0000
9.0000
10.000
TIME (SECONDS)
THU, JAN 29 2009 15:52
WIND BUS VOLTS

2013 WINTER PEAK STORA MIN
NS-NB=0; NB-NE=500; CBX=732; ONI=961 ONS=851
3 PHASE FAULT ON L6042 AT 113H-DARTEAST
CLEARED IN 6 CYCLES - RECLOSE ATTEMPT IN 5 SEC FROM 91H
FILE: a122-l6042_113H_3ph_recl-2013WP-NS-0.out
CHNL#S 20.4: [ANGL199169 [TUFTCV3 14.400] [3]] [ANGL156661 [DARL G1 22.000] [1
CHNL#S 17.4: [ANGL199086 [TRENTON613.800] [6]] [ANGL156661 [DARL G1 22.000] [1
CHNL#S 16.4: [ANGL199085 [TRENTN5 13.800] [5]] [ANGL156661 [DARL G1 22.000] [1
CHNL#S 15.4: [ANGL199061 [TMP1 STO13.800] [1]] [ANGL156661 [DARL G1 22.000] [1
CHNL#S 13.4: [ANGL199043 [ACONIG1 20.000] [1]] [ANGL156661 [DARL G1 22.000] [1
CHNL#S 11.4: [ANGL199001 [LINGAN1 14.400] [1]] [ANGL156661 [DARL G1 22.000] [1
100.00
-100.0
50.000
-150.0
0.0
1.0000
2.0000
3.0000
4.0000
5.0000
6.0000
7.0000
8.0000
9.0000
10.000
TIME (SECONDS)
THU, JAN 29 2009 15:52
NS ANGLE

2013 WINTER PEAK STORA MIN
NS-NB=0; NB-NE=500; CBX=732; ONI=961 ONS=851
3 PHASE FAULT ON L6042 AT 113H-DARTEAST
CLEARED IN 6 CYCLES - RECLOSE ATTEMPT IN 5 SEC FROM 91H
FILE: a122-l6042_113H_3ph_recl-2013WP-NS-0.out
CHNL#S 10.4: [ANGL190472 [BLLDNG2 19.000] [1]] [ANGL156661 [DARL G1 22.000] [1
CHNL#S 6.4: [ANGL190456 [LEPRG1 26.000] [1]] [ANGL156661 [DARL G1 22.000] [1
CHNL#S 5.4: [ANGL190450 [MACTG1 13.800] [1]] [ANGL156661 [DARL G1 22.000] [1
CHNL#S 3.4: [ANGL126652 [RAV 3 22.000] [1]] [ANGL156661 [DARL G1 22.000] [1
CHNL#S 2.4: [ANGL101063 [MYST G7 22.000] [1]] [ANGL156661 [DARL G1 22.000] [1
CHNL#S 7.4: [ANGL190457 [C.CVG1 19.000] [1]] [ANGL156661 [DARL G1 22.000] [1
100.00
-100.0
0.0
1.0000
2.0000
3.0000
4.0000
5.0000
6.0000
7.0000
8.0000
9.0000
10.000
TIME (SECONDS)
THU, JAN 29 2009 15:52
"NE,NY,NB ANGLE"

2013 WINTER PEAK STORA MIN
NS-NB=0; NB-NE=500; CBX=732; ONI=961 ONS=851
3 PHASE FAULT ON L6042 AT 113H-DARTEAST
CLEARED IN 6 CYCLES - RECLOSE ATTEMPT IN 5 SEC FROM 91H
FILE: a122-l6042_113H_3ph_recl-2013WP-NS-0.out
CHNL# 59: [POWR199169 [TUFTCV3 14.400] [3]]
CHNL# 56: [POWR199086 [TRENTON613.800] [6]]
CHNL# 55: [POWR199085 [TRENTN5 13.800] [5]]
CHNL# 54: [POWR199061 [TMP1 STO13.800] [1]]
CHNL# 52: [POWR199043 [ACONIG1 20.000] [1]]
CHNL# 50: [POWR199001 [LINGAN1 14.400] [1]]
2.5000
1.0000
-1.500
0.0
1.0000
2.0000
3.0000
4.0000
5.0000
6.0000
7.0000
8.0000
9.0000
10.000
TIME (SECONDS)
THU, JAN 29 2009 15:52
NS MW

2013 WINTER PEAK STORA MIN
NS-NB=0; NB-NE=500; CBX=732; ONI=961 ONS=851
3 PHASE FAULT ON L6042 AT 113H-DARTEAST
CLEARED IN 6 CYCLES - RECLOSE ATTEMPT IN 5 SEC FROM 91H
FILE: a122-l6042_113H_3ph_recl-2013WP-NS-0.out
CHNL# 49: [POWER190472 [BLLDNG2 19.000] [1]]
CHNL# 45: [POWER190456 [LEPRG1 26.000] [1]]
CHNL# 44: [POWER190450 [MACTG1 13.800] [1]]
CHNL# 42: [POWER126652 [RAV 3 22.000] [1]]
CHNL# 41: [POWER101063 [MYST G7 22.000] [1]]
CHNL# 46: [POWER190457 [C.CVG1 19.000] [1]]
7.0000
9.0000
5.0000
6.5000
2.0000
4.0000
0.0
1.0000
1.0000
2.0000
3.0000
4.0000
5.0000
6.0000
7.0000
8.0000
9.0000
10.000
TIME (SECONDS)
THU, JAN 29 2009 15:52
"NE,NY,NB POWER"

2013 WINTER PEAK STORA MIN
NS-NB=0; NB-NE=500; CBX=732; ONI=961 ONS=851
3 PHASE FAULT ON L6042 AT 113H-DARTEAST
CLEARED IN 6 CYCLES - RECLOSE ATTEMPT IN 5 SEC FROM 91H
FILE: a122-l6042_113H_3ph_recl-2013WP-NS-0.out
CHNL# 119: [VARS IR141-DIGBY]
CHNL# 118: [VARS IR137-STATIA]
CHNL# 117: [VARS IR114-GLENDHU]
CHNL# 116: [VARS IR84-DALHOUSIE]
CHNL# 115: [VARS IR82_NUTTBY]
CHNL# 114: [VARS IR45_AMHERST]
0.50000
-0.5000
0.0
1.0000
2.0000
3.0000
4.0000
5.0000
6.0000
7.0000
8.0000
9.0000
10.000
TIME (SECONDS)
THU, JAN 29 2009 15:52
NS WIND MV

2013 WINTER PEAK STORA MIN
NS-NB=0; NB-NE=500; CBX=732; ONI=961 ONS=851
3 PHASE FAULT ON L6042 AT 113H-DARTEAST
CLEARED IN 6 CYCLES - RECLOSE ATTEMPT IN 5 SEC FROM 91H
FILE: a122-l6042_113H_3ph_recl-2013WP-NS-0.out
CHNL# 79: [POWER IR141-DIGBY]
CHNL# 78: [POWER IR137-STATIA]
CHNL# 77: [POWER IR114-GLENDHU]
CHNL# 76: [POWER IR84-DALHOUSIE]
CHNL# 75: [POWER IR82_NUTTBY]
CHNL# 74: [POWER IR45_AMHERST]
1.0000
0.0
0.0
1.0000
2.0000
3.0000
4.0000
5.0000
6.0000
7.0000
8.0000
9.0000
10.000
TIME (SECONDS)
THU, JAN 29 2009 15:52
NS WIND MW

2013 WINTER PEAK STORA MIN
NS-NB=0; NB-NE=500; CBX=732; ONI=961 ONS=851
3 PHASE FAULT ON L6042 AT 113H-DARTEAST
CLEARED IN 6 CYCLES - RECLOSE ATTEMPT IN 5 SEC FROM 91H
FILE: a122-l6042_113H_3ph_recl-2013WP-NS-0.out
CHNL# 133: [VOLT199125 IONSLOW 345.00]
CHNL# 132: [VOLT199120 [HOPEWELL 345.00]
CHNL# 131: [VOLT199045 [WOODBINE345.00]
CHNL# 130: [VOLT190320 [SALBRY 345.00]
CHNL# 128: [VOLT190004 [KESWICK 345.00]
CHNL# 127: [VOLT 70002 [ORRINGTN345.00]
1.1000
0.90000
1.0000
2.0000
3.0000
4.0000
5.0000
6.0000
7.0000
8.0000
9.0000
10.000
TIME (SECONDS)
THU, JAN 29 2009 15:52
"345KV VOLTAGE"

2013 WINTER PEAK STORA MIN
NS-NB=0; NB-NE=500; CBX=732; ONI=961 ONS=851
3 PHASE FAULT ON L6042 AT 113H-DARTEAST
CLEARED IN 6 CYCLES - RECLOSE ATTEMPT IN 5 SEC FROM 91H
FILE: a122-l6042_113H_3ph_recl-2013WP-NS-0.out
CHNL# 125: 60*(1+[FREQ199125 [ONSLOW 345.00])
CHNL# 124: 60*(1+[FREQ199120 [HOPEWELL 345.00])
CHNL# 123: 60*(1+[FREQ199045 [WOODBINE345.00])
CHNL# 122: 60*(1+[FREQ190320 [SALBRY 345.00])
CHNL# 121: 60*(1+[FREQ190197 [C.COVE 345.00])
CHNL# 120: 60*(1+[FREQ 70002 [ORRINGTN345.00])
60.500
59.500
0.0
1.0000
2.0000
3.0000
4.0000
5.0000
6.0000
7.0000
8.0000
9.0000
10.000
TIME (SECONDS)
THU, JAN 29 2009 15:52
FREQUENCY HZ

2013 WINTER PEAK STORA MIN
NS-NB=0; NB-NE=500; CBX=732; ONI=961 ONS=851
3 PHASE FAULT ON L6042 AT 113H-DARTEAST
CLEARED IN 6 CYCLES - RECLOSE ATTEMPT IN 5 SEC FROM 91H
FILE: a122-l6042_113H_3ph_recl-2013WP-NS-0.out
CHNL# 146: [VOLT199280 [TUSKET A138.00]]
CHNL# 145: [VOLT199193 [1H-WAS 138.00]]
CHNL# 144: [VOLT199165 [TUFTCOVE138.00]]
CHNL# 143: [VOLT199135 [SPRNGHILL138.00]]
CHNL# 142: [VOLT199090 [50N-TREN138.00]]
CHNL# 141: [VOLT199051 [HASTINGS138.00]]
1.2000
0.70000
0.0
1.0000
2.0000
3.0000
4.0000
5.0000
6.0000
7.0000
8.0000
9.0000
10.000
TIME (SECONDS)
THU, JAN 29 2009 15:52
138KV BUS VOLTS

2013 WINTER PEAK STORA MIN
NS-NB=0; NB-NE=500; CBX=732; ONI=961 ONS=851
3 PHASE FAULT ON L6042 AT 113H-DARTEAST
CLEARED IN 6 CYCLES - RECLOSE ATTEMPT IN 5 SEC FROM 91H
FILE: a122-l6042_113H_3ph_recl-2013WP-NS-0.out
CHNL# 140: [VOLT199240 [BWATER A230.00]]
CHNL# 139: [VOLT199200 [BRUSHY 230.00]]
CHNL# 138: [VOLT199130 [ONSLOW 230.00]]
CHNL# 137: [VOLT199050 [HASTINGS230.00]]
CHNL# 136: [VOLT199044 [PT.ACONI230.00]]
CHNL# 135: [VOLT199000 [LINGAN 230.00]]
1.2000
0.70000
0.0
1.0000
2.0000
3.0000
4.0000
5.0000
6.0000
7.0000
8.0000
9.0000
10.000
TIME (SECONDS)
THU, JAN 29 2009 15:52
230KV BUS VOLTS

2013 WINTER PEAK STORA MIN
NS-NB=0; NB-NE=500; CBX=732; ONI=961 ONS=851
3 PHASE FAULT ON L6042 AT 113H-DARTEAST
CLEARED IN 6 CYCLES - RECLOSE ATTEMPT IN 5 SEC FROM 91H
FILE: a122-l6042_113H_3ph_recl-2013WP-NS-0.out
CHNL# 217: [L6533MW]
CHNL# 215: [L6503MW]
CHNL# 197: [L8003MW]
CHNL# 195: [L8004MW]
CHNL# 193: [L8001MW]
CHNL# 221: [L3001MW]
250.00
-250.0
500.00
0.0
1000.0
-1000.
0.0
1.0000
2.0000
3.0000
4.0000
5.0000
6.0000
7.0000
8.0000
9.0000
10.000
TIME (SECONDS)
THU, JAN 29 2009 15:52
LINE FLOW MW

2013 WINTER PEAK STORA MIN
NS-NB=0; NB-NE=500; CBX=732; ONI=961 ONS=851
3 PHASE FAULT ON L6042 AT 113H-DARTEAST
CLEARED IN 6 CYCLES - RECLOSE ATTEMPT IN 5 SEC FROM 91H
FILE: a122-l6042_113H_3ph_recl-2013WP-NS-0.out
CHNL# 154: [IR141-DIGBYH69.0 VOLTS]
CHNL# 153: [IR137-STATIG25.0 VOLTS]
CHNL# 152: [IR114-GLENDH138.0 VOLTS]
CHNL# 151: [IR84-DALHOHV230.0 VOLTS]
CHNL# 150: [IR82_NUTBHV69.0 VOLTS]
CHNL# 149: [IR45_AMHERTP138.0 VOLTS]
1.2000
0.70000
0.0
1.0000
2.0000
3.0000
4.0000
5.0000
6.0000
7.0000
8.0000
9.0000
10.000
TIME (SECONDS)
THU, JAN 29 2009 15:52
WIND BUS VOLTS

2013 WINTER PEAK STORA MIN
NS-NB=0; NB-NE=500; CBX=732; ONI=961 ONS=851
3 PHASE FAULT ON L6042 AT 113H-DARTEAST PRIMARY FAILS
CLEARED IN 6 CYCLES - RECLOSE ATTEMPT IN 5 SEC FROM 91H
FILE: a122F-l6042_113H_3ph_recl-2013WP-NS-0.out
CHNL#S 20,4: [ANGL199169 [TUFTCV3 14.400] [3]] [ANGL156661 [DARL G1 22.000] [1]
CHNL#S 17,4: [ANGL199086 [TRENTON613.800] [6]] [ANGL156661 [DARL G1 22.000] [1]
CHNL#S 16,4: [ANGL199085 [TRENTN5 13.800] [5]] [ANGL156661 [DARL G1 22.000] [1]
CHNL#S 15,4: [ANGL199061 [TMP1 STO13.800] [1]] [ANGL156661 [DARL G1 22.000] [1]
CHNL#S 13,4: [ANGL199043 [ACONIG1 20.000] [1]] [ANGL156661 [DARL G1 22.000] [1]
CHNL#S 11,4: [ANGL199001 [LINGAN1 14.400] [1]] [ANGL156661 [DARL G1 22.000] [1]
100.00
-100.0
0.0
1.0000
2.0000
3.0000
4.0000
5.0000
6.0000
7.0000
8.0000
9.0000
10.000
TIME (SECONDS)
THU, JAN 29 2009 15:52
NS ANGLE

2013 WINTER PEAK STORA MIN
NS-NB=0; NB-NE=500; CBX=732; ONI=961 ONS=851
3 PHASE FAULT ON L6042 AT 113H-DARTEAST PRIMARY FAILS
CLEARED IN 6 CYCLES - RECLOSE ATTEMPT IN 5 SEC FROM 91H
FILE: a122F-l6042_113H_3ph_recl-2013WP-NS-0.out
CHNL#S 10,4: [ANGL190472 [BLLDNG2 19.000] [1]] [ANGL156661 [DARL G1 22.000] [1]
CHNL#S 6,4: [ANGL190456 [LEPRG1 26.000] [1]] [ANGL156661 [DARL G1 22.000] [1]
CHNL#S 5,4: [ANGL190450 [MACTG1 13.800] [1]] [ANGL156661 [DARL G1 22.000] [1]
CHNL#S 3,4: [ANGL126652 [RAV 3 22.000] [1]] [ANGL156661 [DARL G1 22.000] [1]
CHNL#S 2,4: [ANGL101063 [MYST G7 22.000] [1]] [ANGL156661 [DARL G1 22.000] [1]
CHNL#S 7,4: [ANGL190457 [C.CVG1 19.000] [1]] [ANGL156661 [DARL G1 22.000] [1]
100.00
-100.0
0.0
1.0000
2.0000
3.0000
4.0000
5.0000
6.0000
7.0000
8.0000
9.0000
10.000
TIME (SECONDS)
THU, JAN 29 2009 15:52
"NE,NY,NB ANGLE"

2013 WINTER PEAK STORA MIN
NS-NB=0; NB-NE=500; CBX=732; ONI=961 ONS=851
3 PHASE FAULT ON L6042 AT 113H-DARTEAST PRIMARY FAILS
CLEARED IN 6 CYCLES - RECLOSE ATTEMPT IN 5 SEC FROM 91H
FILE: a122F-l6042_113H_3ph_recl-2013WP-NS-0.out
CHNL# 59: [POWER199169 [TUFTCV3 14.400] [3]]
CHNL# 56: [POWER199086 [TRENTON613.800] [6]]
CHNL# 55: [POWER199085 [TRENTN5 13.800] [5]]
CHNL# 54: [POWER199061 [TMP1 STO13.800] [1]]
CHNL# 52: [POWER199043 [ACONIG1 20.000] [1]]
CHNL# 50: [POWER199001 [LINGAN1 14.400] [1]]
2.5000
-1.500
0.0
1.0000
2.0000
3.0000
4.0000
5.0000
6.0000
7.0000
8.0000
9.0000
10.000
TIME (SECONDS)
THU, JAN 29 2009 15:52
NS MW

2013 WINTER PEAK STORA MIN
NS-NB=0; NB-NE=500; CBX=732; ONI=961 ONS=851
3 PHASE FAULT ON L6042 AT 113H-DARTEAST PRIMARY FAILS
CLEARED IN 6 CYCLES - RECLOSE ATTEMPT IN 5 SEC FROM 91H
FILE: a122F-l6042_113H_3ph_recl-2013WP-NS-0.out
CHNL# 49: [POWER190472 [BLLDNG2 19.000] [1]]
CHNL# 45: [POWER190456 [LEPRG1 26.000] [1]]
CHNL# 44: [POWER190450 [MACTG1 13.800] [1]]
CHNL# 42: [POWER126652 [RAV 3 22.000] [1]]
CHNL# 41: [POWER101063 [MYST G7 22.000] [1]]
CHNL# 46: [POWER190457 [C.CVG1 19.000] [1]]
7.0000
4.0000
0.0
2.0000
1.0000
5.0000
6.0000
7.0000
8.0000
9.0000
10.000
TIME (SECONDS)
THU, JAN 29 2009 15:52
"NE,NY,NB POWER"

2013 WINTER PEAK STORA MIN
NS-NB=0; NB-NE=500; CBX=732; ONI=961 ONS=851
3 PHASE FAULT ON L6042 AT 113H-DARTEAST PRIMARY FAILS
CLEARED IN 6 CYCLES - RECLOSE ATTEMPT IN 5 SEC FROM 91H
FILE: a122F-l6042_113H_3ph_recl-2013WP-NS-0.out
CHNL# 119: [VARS IR141-DIGBY]
CHNL# 118: [VARS IR137-STATIA]
CHNL# 117: [VARS IR114-GLENDHU]
CHNL# 116: [VARS IR84-DALHOUSIE]
CHNL# 115: [VARS IR82_NUTTBY]
CHNL# 114: [VARS IR45_AMHERST]
0.50000
-0.5000
0.0
1.0000
2.0000
3.0000
4.0000
5.0000
6.0000
7.0000
8.0000
9.0000
10.000
TIME (SECONDS)
THU, JAN 29 2009 15:52
NS WIND MV

2013 WINTER PEAK STORA MIN
NS-NB=0; NB-NE=500; CBX=732; ONI=961 ONS=851
3 PHASE FAULT ON L6042 AT 113H-DARTEAST PRIMARY FAILS
CLEARED IN 6 CYCLES - RECLOSE ATTEMPT IN 5 SEC FROM 91H
FILE: a122F-l6042_113H_3ph_recl-2013WP-NS-0.out
CHNL# 79: [POWER IR141-DIGBY]
CHNL# 78: [POWER IR137-STATIA]
CHNL# 77: [POWER IR114-GLENDHU]
CHNL# 76: [POWER IR84-DALHOUSIE]
CHNL# 75: [POWER IR82_NUTTBY]
CHNL# 74: [POWER IR45_AMHERST]
1.0000
0.0
0.0
1.0000
2.0000
3.0000
4.0000
5.0000
6.0000
7.0000
8.0000
9.0000
10.000
TIME (SECONDS)
THU, JAN 29 2009 15:52
NS WIND MW

2013 WINTER PEAK STORA MIN
NS-NB=0; NB-NE=500; CBX=732; ONI=961 ONS=851
3 PHASE FAULT ON L6042 AT 113H-DARTEAST PRIMARY FAILS
CLEARED IN 6 CYCLES - RECLOSE ATTEMPT IN 5 SEC FROM 91H
FILE: a122F-l6042_113H_3ph_recl-2013WP-NS-0.out
CHNL# 133: [VOLT199125 [ONSLOW 345.00]]
CHNL# 132: [VOLT199120 [HOPEWELL 345.00]]
CHNL# 131: [VOLT199045 [WOODBINE345.00]]
CHNL# 130: [VOLT190320 [SALBRY 345.00]]
CHNL# 128: [VOLT190004 [KESWICK 345.00]]
CHNL# 127: [VOLT 70002 [ORRINGTN345.00]]
1.1000
0.90000
0.0
1.0000
2.0000
3.0000
4.0000
5.0000
6.0000
7.0000
8.0000
9.0000
10.000
TIME (SECONDS)
THU, JAN 29 2009 15:52
"345KV VOLTAGE"

2013 WINTER PEAK STORA MIN
NS-NB=0; NB-NE=500; CBX=732; ONI=961 ONS=851
3 PHASE FAULT ON L6042 AT 113H-DARTEAST PRIMARY FAILS
CLEARED IN 6 CYCLES - RECLOSE ATTEMPT IN 5 SEC FROM 91H
FILE: a122F-l6042_113H_3ph_recl-2013WP-NS-0.out
CHNL# 125: 60*(1+[FREQ199125 [ONSLOW 345.00]])
CHNL# 124: 60*(1+[FREQ199120 [HOPEWELL 345.00]])
CHNL# 123: 60*(1+[FREQ199045 [WOODBINE345.00]])
CHNL# 122: 60*(1+[FREQ190320 [SALBRY 345.00]])
CHNL# 121: 60*(1+[FREQ190197 [C.COVE 345.00]])
CHNL# 120: 60*(1+[FREQ 70002 [ORRINGTN345.00]])
60.500
59.500
0.0
1.0000
2.0000
3.0000
4.0000
5.0000
6.0000
7.0000
8.0000
9.0000
10.000
TIME (SECONDS)
THU, JAN 29 2009 15:52
FREQUENCY HZ

2013 WINTER PEAK STORA MIN
NS-NB=0; NB-NE=500; CBX=732; ONI=961 ONS=851
3 PHASE FAULT ON L6042 AT 113H-DARTEAST PRIMARY FAILS
CLEARED IN 6 CYCLES - RECLOSE ATTEMPT IN 5 SEC FROM 91H
FILE: a122F-l6042_113H_3ph_recl-2013WP-NS-0.out
CHNL# 146: [VOLT199280 [TUSKET A138.00]]
CHNL# 145: [VOLT199193 [1H-WAS 138.00]]
CHNL# 144: [VOLT199165 [TUFTCOVE138.00]]
CHNL# 143: [VOLT199135 [SPRNGHILL138.00]]
CHNL# 142: [VOLT199090 [50N-TREN138.00]]
CHNL# 141: [VOLT199051 [HASTINGS138.00]]
1.2000
0.70000
0.0
1.0000
2.0000
3.0000
4.0000
5.0000
6.0000
7.0000
8.0000
9.0000
10.000
TIME (SECONDS)
THU, JAN 29 2009 15:52
138KV BUS VOLTS

2013 WINTER PEAK STORA MIN
NS-NB=0; NB-NE=500; CBX=732; ONI=961 ONS=851
3 PHASE FAULT ON L6042 AT 113H-DARTEAST PRIMARY FAILS
CLEARED IN 6 CYCLES - RECLOSE ATTEMPT IN 5 SEC FROM 91H
FILE: a122F-l6042_113H_3ph_recl-2013WP-NS-0.out
CHNL# 140: [VOLT199240 [BWATER A230.00]]
CHNL# 139: [VOLT199200 [BRUSHY 230.00]]
CHNL# 138: [VOLT199130 [ONSLOW 230.00]]
CHNL# 137: [VOLT199050 [HASTINGS230.00]]
CHNL# 136: [VOLT199044 [PT.ACONI230.00]]
CHNL# 135: [VOLT199000 [LINGAN 230.00]]
1.2000
0.70000
0.0
1.0000
2.0000
3.0000
4.0000
5.0000
6.0000
7.0000
8.0000
9.0000
10.000
TIME (SECONDS)
THU, JAN 29 2009 15:52
230KV BUS VOLTS

2013 WINTER PEAK STORA MIN
NS-NB=0; NB-NE=500; CBX=732; ONI=961 ONS=851
3 PHASE FAULT ON L6042 AT 113H-DARTEAST PRIMARY FAILS
CLEARED IN 6 CYCLES - RECLOSE ATTEMPT IN 5 SEC FROM 91H
FILE: a122F-l6042_113H_3ph_recl-2013WP-NS-0.out
CHNL# 217: [L6513MW]
CHNL# 215: [L6503MW]
CHNL# 197: [L8003MW]
CHNL# 195: [L8004MW]
CHNL# 193: [L8001MW]
CHNL# 221: [L3001MW]
250.00
-250.0
500.00
0.0
1000.0
-1000.
0.0
1.0000
2.0000
3.0000
4.0000
5.0000
6.0000
7.0000
8.0000
9.0000
10.000
TIME (SECONDS)
THU, JAN 29 2009 15:52
LINE FLOW MW

2013 WINTER PEAK STORA MIN
NS-NB=0; NB-NE=500; CBX=732; ONI=961 ONS=851
3 PHASE FAULT ON L6042 AT 113H-DARTEAST PRIMARY FAILS
CLEARED IN 6 CYCLES - RECLOSE ATTEMPT IN 5 SEC FROM 91H
FILE: a122F-l6042_113H_3ph_recl-2013WP-NS-0.out
CHNL# 154: [IR141-DIGBYH69.0 VOLTS]
CHNL# 153: [IR137-STATIG25.0 VOLTS]
CHNL# 152: [IR114-GLENDH138.0 VOLTS]
CHNL# 151: [IR84-DALHOHV230.0 VOLTS]
CHNL# 150: [IR82_NUTBHV69.0 VOLTS]
CHNL# 149: [IR45_AMHERTP138.0 VOLTS]
1.2000
0.70000
0.0
1.0000
2.0000
3.0000
4.0000
5.0000
6.0000
7.0000
8.0000
9.0000
10.000
TIME (SECONDS)
THU, JAN 29 2009 15:52
WIND BUS VOLTS

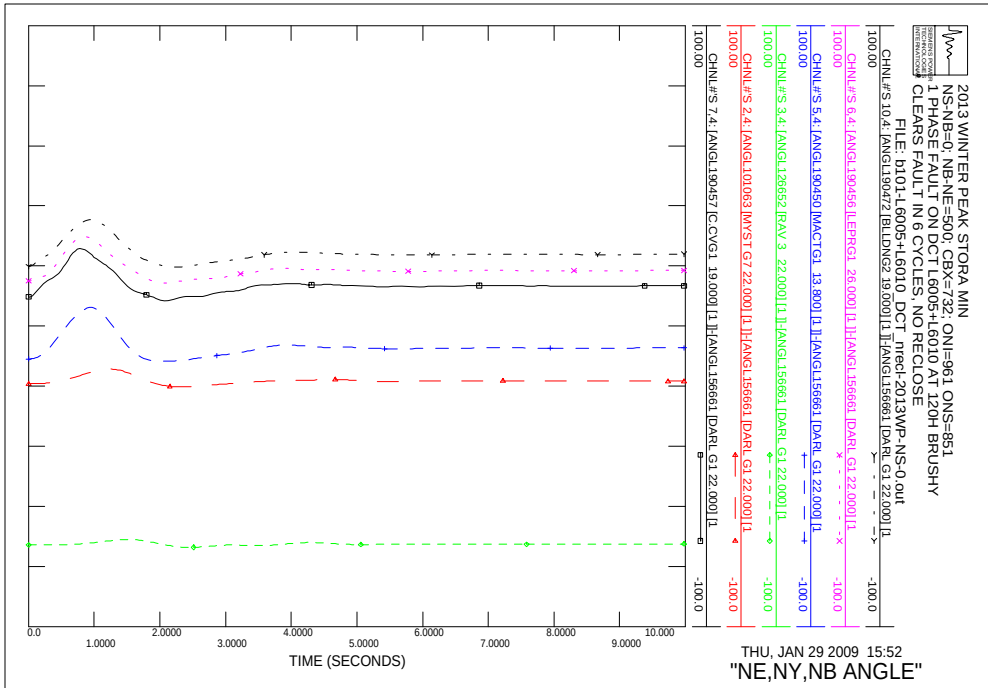
2013 WINTER PEAK STORA MIN
NS-NB=0; NB-NE=500; CBX=732; ONI=961 ONS=851
1 PHASE FAULT ON DCT L6005+L6010 AT 120H BRUSHY
CLEARS FAULT IN 6 CYCLES, NO RECLOSE
FILE: b101-L6005+L6010_DCT_nrecl-2013WP-NS-0.out
CHNL#S 10,4: [ANGL190472 [BLLDNG2 19.000] [1]]-[ANGL156661 [DARL G1 22.000] [1
CHNL#S 6,4: [ANGL190456 [LEPRG1 26.000] [1]]-[ANGL156661 [DARL G1 22.000] [1
CHNL#S 5,4: [ANGL190450 [MACTG1 13.800] [1]]-[ANGL156661 [DARL G1 22.000] [1
CHNL#S 3,4: [ANGL126652 [RAV 3 22.000] [1]]-[ANGL156661 [DARL G1 22.000] [1
CHNL#S 2,4: [ANGL101063 [MYST G7 22.000] [1]]-[ANGL156661 [DARL G1 22.000] [1
CHNL#S 7,4: [ANGL190457 [C.CVG1 19.000] [1]]-[ANGL156661 [DARL G1 22.000] [1
100.00
-100.0
TIME (SECONDS)
THU, JAN 29 2009 15:52
"NE,NY,NB ANGLE"

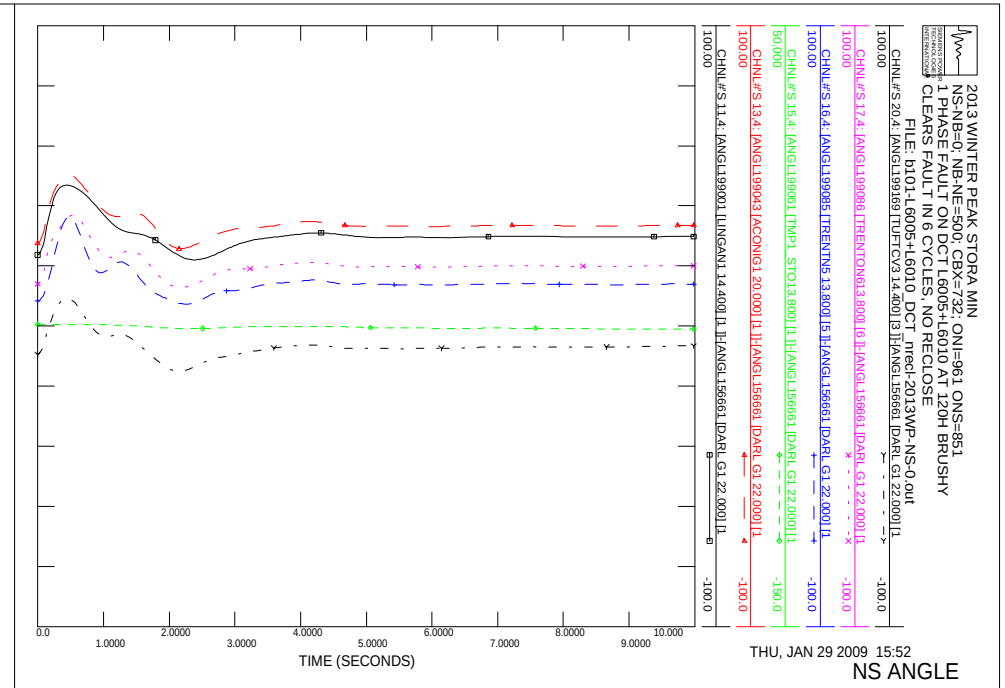
2013 WINTER PEAK STORA MIN
NS-NB=0; NB-NE=500; CBX=732; ONI=961 ONS=851
1 PHASE FAULT ON DCT L6005+L6010 AT 120H BRUSHY
CLEARS FAULT IN 6 CYCLES, NO RECLOSE
FILE: b101-L6005+L6010_DCT_nrecl-2013WP-NS-0.out
CHNL#S 20,4: [ANGL199169 [TUFTCV3 14.400] [3]]-[ANGL156661 [DARL G1 22.000] [1
CHNL#S 17,4: [ANGL199086 [TRENTON613.800] [6]]-[ANGL156661 [DARL G1 22.000] [1
CHNL#S 16,4: [ANGL199085 [TRENTN5 13.800] [5]]-[ANGL156661 [DARL G1 22.000] [1
CHNL#S 15,4: [ANGL199061 [TMP1 STO13.800] [1]]-[ANGL156661 [DARL G1 22.000] [1
CHNL#S 13,4: [ANGL199043 [ACONIG1 20.000] [1]]-[ANGL156661 [DARL G1 22.000] [1
CHNL#S 11,4: [ANGL199001 [LINGAN1 14.400] [1]]-[ANGL156661 [DARL G1 22.000] [1
100.00
-100.0
TIME (SECONDS)
THU, JAN 29 2009 15:52
NS ANGLE

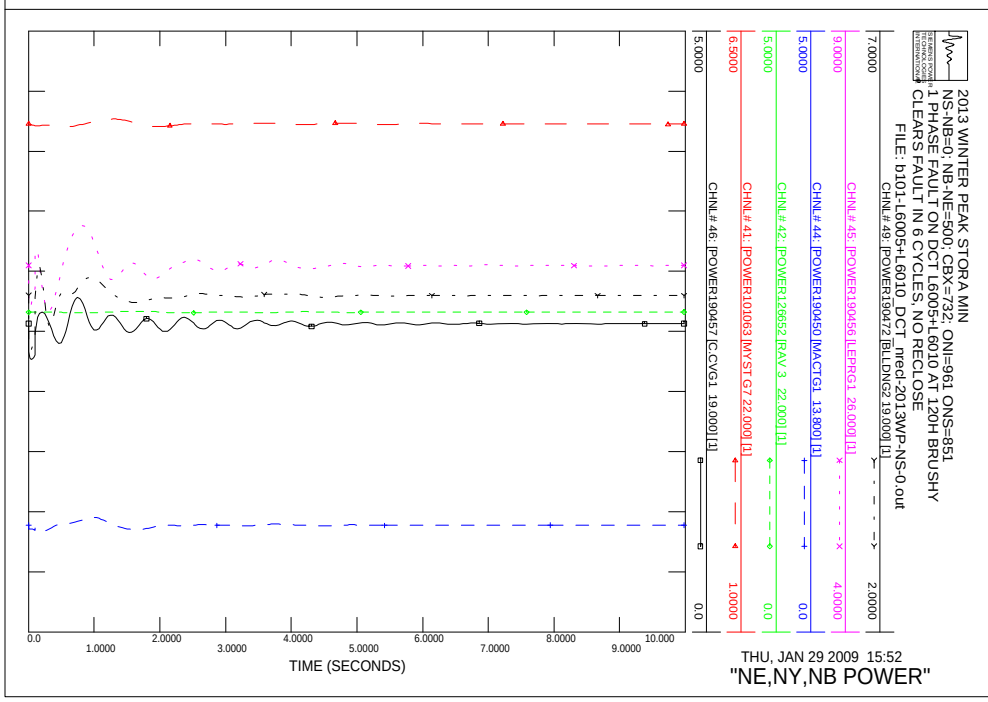
2013 WINTER PEAK STORA MIN
NS-NB=0; NB-NE=500; CBX=732; ONI=961 ONS=851
1 PHASE FAULT ON DCT L6005+L6010 AT 120H BRUSHY
CLEARS FAULT IN 6 CYCLES, NO RECLOSE
FILE: b101-L6005+L6010_DCT_nrecl-2013WP-NS-0.out
CHNL# 49: [POWER190472 [BLLDNG2 19.000] [1]]
CHNL# 45: [POWER190456 [LEPRG1 26.000] [1]]
CHNL# 44: [POWER190450 [MACTG1 13.800] [1]]
CHNL# 42: [POWER126652 [RAV 3 22.000] [1]]
CHNL# 41: [POWER101063 [MYST G7 22.000] [1]]
CHNL# 46: [POWER190457 [C.CVG1 19.000] [1]]
7.0000
2.0000
9.0000
4.0000
5.0000
0.0
6.5000
1.0000
5.0000
0.0
TIME (SECONDS)
THU, JAN 29 2009 15:52
"NE,NY,NB POWER"

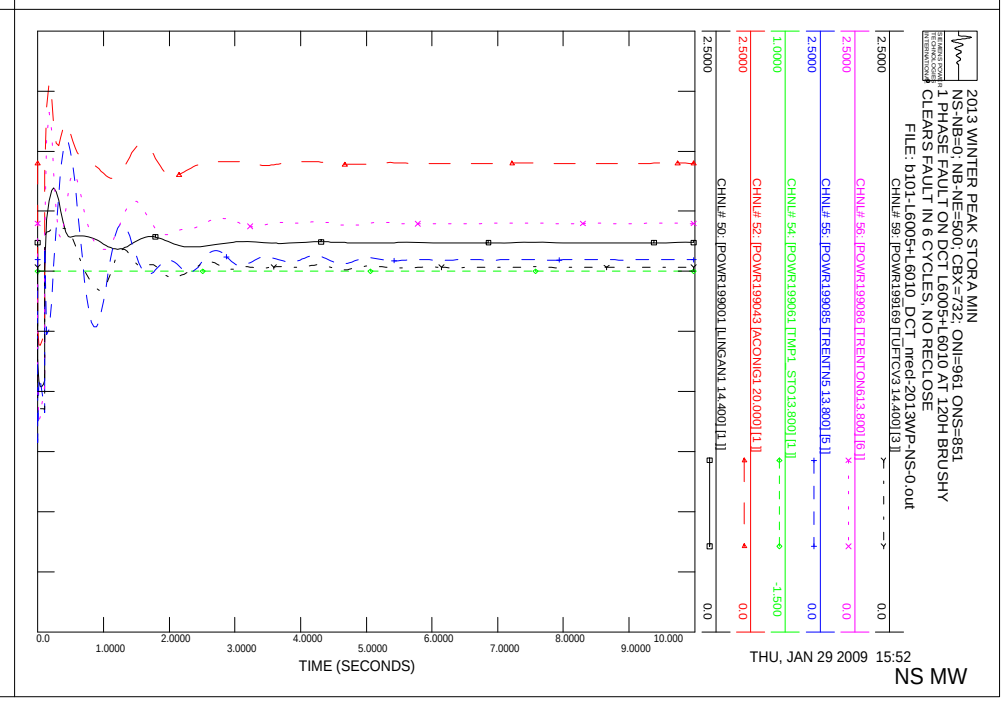
2013 WINTER PEAK STORA MIN
NS-NB=0; NB-NE=500; CBX=732; ONI=961 ONS=851
1 PHASE FAULT ON DCT L6005+L6010 AT 120H BRUSHY
CLEARS FAULT IN 6 CYCLES, NO RECLOSE
FILE: b101-L6005+L6010_DCT_nrecl-2013WP-NS-0.out
CHNL# 59: [POWER199169 [TUFTCV3 14.400] [3]]
CHNL# 56: [POWER199086 [TRENTON613.800] [6]]
CHNL# 55: [POWER199085 [TRENTN5 13.800] [5]]
CHNL# 54: [POWER199061 [TMP1 STO13.800] [1]]
CHNL# 52: [POWER199043 [ACONIG1 20.000] [1]]
CHNL# 50: [POWER199001 [LINGAN1 14.400] [1]]
2.5000
0.0
2.5000
0.0
2.5000
0.0
1.0000
-1.500
2.5000
0.0
2.5000
0.0
TIME (SECONDS)
THU, JAN 29 2009 15:52
NS MW

2013 WINTER PEAK STORA MIN
NS-NB=0; NB-NE=500; CBX=732; ONI=961 ONS=851
1 PHASE FAULT ON DCT L6005+L6010 AT 120H BRUSHY
CLEARS FAULT IN 6 CYCLES, NO RECLOSE
FILE: b101-L6005+L6010_DCT_mecl-2013WP-NS-0.out
CHNL# 119: [VARS IR141-DIGBY]
CHNL# 118: [VARS IR137-STATIA]
CHNL# 117: [VARS IR114-GLENDHU]
CHNL# 116: [VARS IR84-DALHOUSIE]
CHNL# 115: [VARS IR82_NUTTBY]
CHNL# 114: [VARS IR45_AMHERST]
TIME (SECONDS)
THU, JAN 29 2009 15:52
NS WIND MV

2013 WINTER PEAK STORA MIN
NS-NB=0; NB-NE=500; CBX=732; ONI=961 ONS=851
1 PHASE FAULT ON DCT L6005+L6010 AT 120H BRUSHY
CLEARS FAULT IN 6 CYCLES, NO RECLOSE
FILE: b101-L6005+L6010_DCT_mecl-2013WP-NS-0.out
CHNL# 79: [POWER IR141-DIGBY]
CHNL# 78: [POWER IR137-STATIA]
CHNL# 77: [POWER IR114-GLENDHU]
CHNL# 76: [POWER IR84-DALHOUSIE]
CHNL# 75: [POWER IR82_NUTTBY]
CHNL# 74: [POWER IR45_AMHERST]
TIME (SECONDS)
THU, JAN 29 2009 15:52
NS WIND MW

2013 WINTER PEAK STORA MIN
NS-NB=0; NB-NE=500; CBX=732; ONI=961 ONS=851
1 PHASE FAULT ON DCT L6005+L6010 AT 120H BRUSHY
CLEARS FAULT IN 6 CYCLES, NO RECLOSE
FILE: b101-L6005+L6010_DCT_mecl-2013WP-NS-0.out
CHNL# 133: [VOLT199125 [ONSLOW 345.00]]
CHNL# 132: [VOLT199120 [HOPEWELL 345.00]]
CHNL# 131: [VOLT199045 [WOODBINE345.00]]
CHNL# 130: [VOLT190320 [SALBRY 345.00]]
CHNL# 128: [VOLT190004 [KESWICK 345.00]]
CHNL# 127: [VOLT 70002 [ORRINGTN345.00]]
TIME (SECONDS)
THU, JAN 29 2009 15:52
"345KV VOLTAGE"

2013 WINTER PEAK STORA MIN
NS-NB=0; NB-NE=500; CBX=732; ONI=961 ONS=851
1 PHASE FAULT ON DCT L6005+L6010 AT 120H BRUSHY
CLEARS FAULT IN 6 CYCLES, NO RECLOSE
FILE: b101-L6005+L6010_DCT_mecl-2013WP-NS-0.out
CHNL# 125: 60*(1+[FREQ199125 [ONSLOW 345.00]])
CHNL# 124: 60*(1+[FREQ199120 [HOPEWELL 345.00]])
CHNL# 123: 60*(1+[FREQ199045 [WOODBINE345.00]])
CHNL# 122: 60*(1+[FREQ190320 [SALBRY 345.00]])
CHNL# 121: 60*(1+[FREQ190197 [C.COVE 345.00]])
CHNL# 120: 60*(1+[FREQ 70002 [ORRINGTN345.00]])
TIME (SECONDS)
THU, JAN 29 2009 15:52
FREQUENCY HZ

2013 WINTER PEAK STORA MIN
NS-NB=0; NB-NE=500; CBX=732; ONI=961 ONS=851
1 PHASE FAULT ON DCT L6005+L6010 AT 120H BRUSHY
CLEARS FAULT IN 6 CYCLES, NO RECLOSE
FILE: b101-L6005+L6010_DCT_mecl-2013WP-NS-0.out
CHNL# 146: [VOLT199280 [TUSKET A138.00]]
CHNL# 145: [VOLT199193 [HHWAS 138.00]]
CHNL# 144: [VOLT199165 [TUFTCOVE138.00]]
CHNL# 143: [VOLT199138 [SPRNGHILL138.00]]
CHNL# 142: [VOLT199090 [SON-TREN138.00]]
CHNL# 141: [VOLT199051 [HASTINGS138.00]]
1.2000
0.70000
0.0
1.0000
2.0000
3.0000
4.0000
5.0000
6.0000
7.0000
8.0000
9.0000
10.000
TIME (SECONDS)
THU, JAN 29 2009 15:52
138KV BUS VOLTS

2013 WINTER PEAK STORA MIN
NS-NB=0; NB-NE=500; CBX=732; ONI=961 ONS=851
1 PHASE FAULT ON DCT L6005+L6010 AT 120H BRUSHY
CLEARS FAULT IN 6 CYCLES, NO RECLOSE
FILE: b101-L6005+L6010_DCT_mecl-2013WP-NS-0.out
CHNL# 140: [VOLT199240 [BWATER A230.00]]
CHNL# 139: [VOLT199200 [BRUSHY 230.00]]
CHNL# 138: [VOLT199130 [ONSLOW 230.00]]
CHNL# 137: [VOLT199050 [HASTINGS230.00]]
CHNL# 136: [VOLT199044 [PT.ACONI230.00]]
CHNL# 135: [VOLT199000 [LINGAN 230.00]]
1.2000
0.70000
0.0
1.0000
2.0000
3.0000
4.0000
5.0000
6.0000
7.0000
8.0000
9.0000
10.000
TIME (SECONDS)
THU, JAN 29 2009 15:52
230KV BUS VOLTS

2013 WINTER PEAK STORA MIN
NS-NB=0; NB-NE=500; CBX=732; ONI=961 ONS=851
1 PHASE FAULT ON DCT L6005+L6010 AT 120H BRUSHY
CLEARS FAULT IN 6 CYCLES, NO RECLOSE
FILE: b101-L6005+L6010_DCT_mecl-2013WP-NS-0.out
CHNL# 217: [L6533MW]
CHNL# 215: [L6503MW]
CHNL# 197: [L8003MW]
CHNL# 195: [L8004MW]
CHNL# 193: [L8001MW]
CHNL# 221: [L3001MW]
250.00
500.00
1000.0
0.0
-250.0
-1000.
TIME (SECONDS)
THU, JAN 29 2009 15:52
LINE FLOW MW

2013 WINTER PEAK STORA MIN
NS-NB=0; NB-NE=500; CBX=732; ONI=961 ONS=851
1 PHASE FAULT ON DCT L6005+L6010 AT 120H BRUSHY
CLEARS FAULT IN 6 CYCLES, NO RECLOSE
FILE: b101-L6005+L6010_DCT_mecl-2013WP-NS-0.out
CHNL# 154: [IR141-DIGBYH69.0 VOLTS]
CHNL# 153: [IR137-STATIG25.0 VOLTS]
CHNL# 152: [IR114-GLENDH138.0 VOLTS]
CHNL# 151: [IR84-DALHOHV230.0 VOLTS]
CHNL# 150: [IR82_NUTBHV69.0 VOLTS]
CHNL# 149: [IR45_AMHERTP138.0 VOLTS]
1.2000
0.70000
0.0
1.0000
2.0000
3.0000
4.0000
5.0000
6.0000
7.0000
8.0000
9.0000
10.000
TIME (SECONDS)
THU, JAN 29 2009 15:52
WIND BUS VOLTS

2013 WINTER PEAK STORA MIN
NS-NB=0; NB-NE=500; CBX=732; ONI=961 ONS=851
1 PHASE FAULT ON DCT L6011 + L6010 AT BRUSHY 138
CLEARS FAULT IN 6 CYCLES, NO RECLOSE
FILE: b102-L6011+L6010_DCT_mecl-2013WP-NS-0.out
CHNL#S 20,4: [ANGL199169 [TUFTCV3 14.400] [3]] [ANGL156661 [DARL G1 22.000] [1
CHNL#S 17,4: [ANGL199086 [TRENTON613.800] [6]] [ANGL156661 [DARL G1 22.000] [1
CHNL#S 16,4: [ANGL199085 [TRENTN5 13.800] [5]] [ANGL156661 [DARL G1 22.000] [1
CHNL#S 15,4: [ANGL199061 [TMP1 STO13.800] [1]] [ANGL156661 [DARL G1 22.000] [1
CHNL#S 13,4: [ANGL199043 [ACONIG1 20.000] [1]] [ANGL156661 [DARL G1 22.000] [1
CHNL#S 11,4: [ANGL199001 [LINGAN1 14.400] [1]] [ANGL156661 [DARL G1 22.000] [1
TIME (SECONDS)
THU, JAN 29 2009 15:52
NS ANGLE

2013 WINTER PEAK STORA MIN
NS-NB=0; NB-NE=500; CBX=732; ONI=961 ONS=851
1 PHASE FAULT ON DCT L6011 + L6010 AT BRUSHY 138
CLEARS FAULT IN 6 CYCLES, NO RECLOSE
FILE: b102-L6011+L6010_DCT_mecl-2013WP-NS-0.out
CHNL#S 10,4: [ANGL190472 [BLLDNG2 19.000] [1]] [ANGL156661 [DARL G1 22.000] [1
CHNL#S 6,4: [ANGL190456 [LEPRG1 26.000] [1]] [ANGL156661 [DARL G1 22.000] [1
CHNL#S 5,4: [ANGL190450 [MACTG1 13.800] [1]] [ANGL156661 [DARL G1 22.000] [1
CHNL#S 3,4: [ANGL126652 [RAV 3 22.000] [1]] [ANGL156661 [DARL G1 22.000] [1
CHNL#S 2,4: [ANGL101063 [MYST G7 22.000] [1]] [ANGL156661 [DARL G1 22.000] [1
CHNL#S 7,4: [ANGL190457 [C.CVG1 19.000] [1]] [ANGL156661 [DARL G1 22.000] [1
TIME (SECONDS)
THU, JAN 29 2009 15:52
"NE,NY,NB ANGLE"

2013 WINTER PEAK STORA MIN
NS-NB=0; NB-NE=500; CBX=732; ONI=961 ONS=851
1 PHASE FAULT ON DCT L6011 + L6010 AT BRUSHY 138
CLEARS FAULT IN 6 CYCLES, NO RECLOSE
FILE: b102-L6011+L6010_DCT_mecl-2013WP-NS-0.out
CHNL# 59: [POWER199169 [TUFTCV3 14.400] [3]]
CHNL# 56: [POWER199086 [TRENTON613.800] [6]]
CHNL# 55: [POWER199085 [TRENTN5 13.800] [5]]
CHNL# 54: [POWER199061 [TMP1 STO13.800] [1]]
CHNL# 52: [POWER199043 [ACONIG1 20.000] [1]]
CHNL# 50: [POWER199001 [LINGAN1 14.400] [1]]
TIME (SECONDS)
THU, JAN 29 2009 15:52
NS MW

2013 WINTER PEAK STORA MIN
NS-NB=0; NB-NE=500; CBX=732; ONI=961 ONS=851
1 PHASE FAULT ON DCT L6011 + L6010 AT BRUSHY 138
CLEARS FAULT IN 6 CYCLES, NO RECLOSE
FILE: b102-L6011+L6010_DCT_mecl-2013WP-NS-0.out
CHNL# 49: [POWER190472 [BLLDNG2 19.000] [1]]
CHNL# 45: [POWER190456 [LEPRG1 26.000] [1]]
CHNL# 44: [POWER190450 [MACTG1 13.800] [1]]
CHNL# 42: [POWER126652 [RAV 3 22.000] [1]]
CHNL# 41: [POWER101063 [MYST G7 22.000] [1]]
CHNL# 46: [POWER190457 [C.CVG1 19.000] [1]]
TIME (SECONDS)
THU, JAN 29 2009 15:52
"NE,NY,NB POWER"

NS WIND MV

NS WIND MW

"345KV VOLTAGE"

FREQUENCY HZ

2013 WINTER PEAK STORA MIN
NS-NB=0; NB-NE=500; CBX=732; ONI=961 ONS=851
1 PHASE FAULT ON DCT L6011 + L6010 AT BRUSHY 138
CLEARS FAULT IN 6 CYCLES, NO RECLOSE
FILE: b102-L6011+L6010_DCT_mecl-2013WP-NS-0.out
CHNL# 146: [VOLT199280 [TUSKET A138.00]]
CHNL# 145: [VOLT199193 [HHWAS 138.00]]
CHNL# 144: [VOLT199165 [TUFTCOVE138.00]]
CHNL# 143: [VOLT199138 [SPRNGHLL138.00]]
CHNL# 142: [VOLT199090 [SON-TREN138.00]]
CHNL# 141: [VOLT199051 [HASTINGS138.00]]
TIME (SECONDS)
THU, JAN 29 2009 15:52
138KV BUS VOLTS

2013 WINTER PEAK STORA MIN
NS-NB=0; NB-NE=500; CBX=732; ONI=961 ONS=851
1 PHASE FAULT ON DCT L6011 + L6010 AT BRUSHY 138
CLEARS FAULT IN 6 CYCLES, NO RECLOSE
FILE: b102-L6011+L6010_DCT_mecl-2013WP-NS-0.out
CHNL# 140: [VOLT199240 [BWATER A230.00]]
CHNL# 139: [VOLT199200 [BRUSHY 230.00]]
CHNL# 138: [VOLT199130 [ONSLOW 230.00]]
CHNL# 137: [VOLT199050 [HASTINGS230.00]]
CHNL# 136: [VOLT199044 [PT.ACONI230.00]]
CHNL# 135: [VOLT199000 [LINGAN 230.00]]
TIME (SECONDS)
THU, JAN 29 2009 15:52
230KV BUS VOLTS

2013 WINTER PEAK STORA MIN
NS-NB=0; NB-NE=500; CBX=732; ONI=961 ONS=851
1 PHASE FAULT ON DCT L6011 + L6010 AT BRUSHY 138
CLEARS FAULT IN 6 CYCLES, NO RECLOSE
FILE: b102-L6011+L6010_DCT_mecl-2013WP-NS-0.out
CHNL# 217: [L6533MWV]
CHNL# 215: [L6503MWV]
CHNL# 197: [L8003MWV]
CHNL# 195: [L8004MWV]
CHNL# 193: [L8001MWV]
CHNL# 221: [L3001MWV]
TIME (SECONDS)
THU, JAN 29 2009 15:52
LINE FLOW MW

2013 WINTER PEAK STORA MIN
NS-NB=0; NB-NE=500; CBX=732; ONI=961 ONS=851
1 PHASE FAULT ON DCT L6011 + L6010 AT BRUSHY 138
CLEARS FAULT IN 6 CYCLES, NO RECLOSE
FILE: b102-L6011+L6010_DCT_mecl-2013WP-NS-0.out
CHNL# 154: [IR141-DIGBYH69.0 VOLTS]
CHNL# 153: [IR137-STATIG25.0 VOLTS]
CHNL# 152: [IR114-GLENDH138.0 VOLTS]
CHNL# 151: [IR84-DALHOHV230.0 VOLTS]
CHNL# 150: [IR82_NUTBHV69.0 VOLTS]
CHNL# 149: [IR45_AMHERTP138.0 VOLTS]
TIME (SECONDS)
THU, JAN 29 2009 15:52
WIND BUS VOLTS

2013 WINTER PEAK STORA MIN
NS-NB=0; NB-NE=500; CBX=732; ONI=961 ONS=851
1 PHASE FAULT L6005/L6016 AT 120H, CLEARED IN
6 CYCLES, NO RECLOSING
FILE: b103-L6005+L6016_DCT_nrecl-2013WP-NS-0.out
CHNL#S 20,4: [ANGL199169 [TUFTCV3 14.400] [3]] [ANGL156661 [DARL G1 22.000] [1
CHNL#S 17,4: [ANGL199086 [TRENTON613.800] [6]] [ANGL156661 [DARL G1 22.000] [1
CHNL#S 16,4: [ANGL199085 [TRENTN5 13.800] [5]] [ANGL156661 [DARL G1 22.000] [1
CHNL#S 15,4: [ANGL199061 [TMP1 STO13.800] [1]] [ANGL156661 [DARL G1 22.000] [1
CHNL#S 13,4: [ANGL199043 [ACONIG1 20.000] [1]] [ANGL156661 [DARL G1 22.000] [1
CHNL#S 11,4: [ANGL199001 [LINGAN1 14.400] [1]] [ANGL156661 [DARL G1 22.000] [1
TIME (SECONDS)
THU, JAN 29 2009 15:52
NS ANGLE

2013 WINTER PEAK STORA MIN
NS-NB=0; NB-NE=500; CBX=732; ONI=961 ONS=851
1 PHASE FAULT L6005/L6016 AT 120H, CLEARED IN
6 CYCLES, NO RECLOSING
FILE: b103-L6005+L6016_DCT_nrecl-2013WP-NS-0.out
CHNL#S 10,4: [ANGL190472 [BLLDNG2 19.000] [1]] [ANGL156661 [DARL G1 22.000] [1
CHNL#S 6,4: [ANGL190456 [LEPRG1 26.000] [1]] [ANGL156661 [DARL G1 22.000] [1
CHNL#S 5,4: [ANGL190450 [MACTG1 13.800] [1]] [ANGL156661 [DARL G1 22.000] [1
CHNL#S 3,4: [ANGL126652 [RAV 3 22.000] [1]] [ANGL156661 [DARL G1 22.000] [1
CHNL#S 2,4: [ANGL101063 [MYST G7 22.000] [1]] [ANGL156661 [DARL G1 22.000] [1
CHNL#S 7,4: [ANGL190457 [C.CVG1 19.000] [1]] [ANGL156661 [DARL G1 22.000] [1
TIME (SECONDS)
THU, JAN 29 2009 15:52
"NE,NY,NB ANGLE"

2013 WINTER PEAK STORA MIN
NS-NB=0; NB-NE=500; CBX=732; ONI=961 ONS=851
1 PHASE FAULT L6005/L6016 AT 120H, CLEARED IN
6 CYCLES, NO RECLOSING
FILE: b103-L6005+L6016_DCT_nrecl-2013WP-NS-0.out
CHNL# 59: [POWER199169 [TUFTCV3 14.400] [3]]
CHNL# 56: [POWER199086 [TRENTON613.800] [6]]
CHNL# 55: [POWER199085 [TRENTN5 13.800] [5]]
CHNL# 54: [POWER199061 [TMP1 STO13.800] [1]]
CHNL# 52: [POWER199043 [ACONIG1 20.000] [1]]
CHNL# 50: [POWER199001 [LINGAN1 14.400] [1]]
TIME (SECONDS)
THU, JAN 29 2009 15:52
NS MW

2013 WINTER PEAK STORA MIN
NS-NB=0; NB-NE=500; CBX=732; ONI=961 ONS=851
1 PHASE FAULT L6005/L6016 AT 120H, CLEARED IN
6 CYCLES, NO RECLOSING
FILE: b103-L6005+L6016_DCT_nrecl-2013WP-NS-0.out
CHNL# 49: [POWER190472 [BLLDNG2 19.000] [1]]
CHNL# 45: [POWER190456 [LEPRG1 26.000] [1]]
CHNL# 44: [POWER190450 [MACTG1 13.800] [1]]
CHNL# 42: [POWER126652 [RAV 3 22.000] [1]]
CHNL# 41: [POWER101063 [MYST G7 22.000] [1]]
CHNL# 46: [POWER190457 [C.CVG1 19.000] [1]]
TIME (SECONDS)
THU, JAN 29 2009 15:52
"NE,NY,NB POWER"

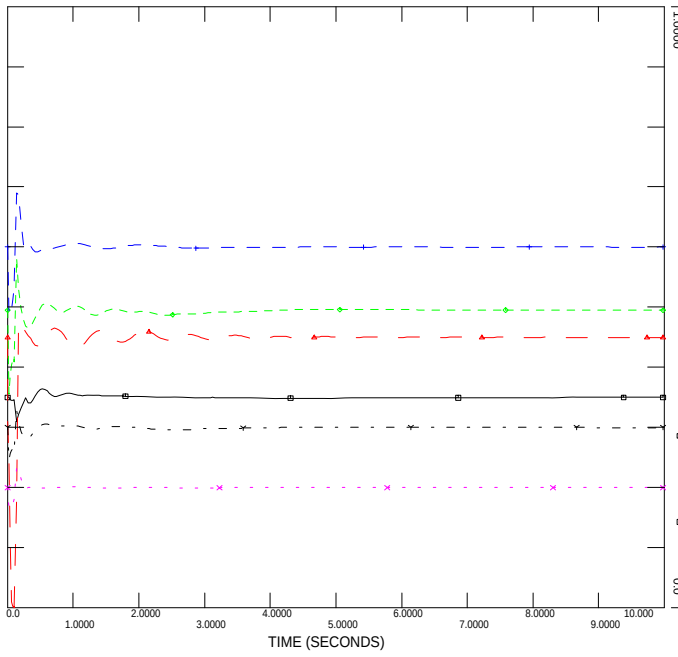

NS WIND MV

NS WIND MW

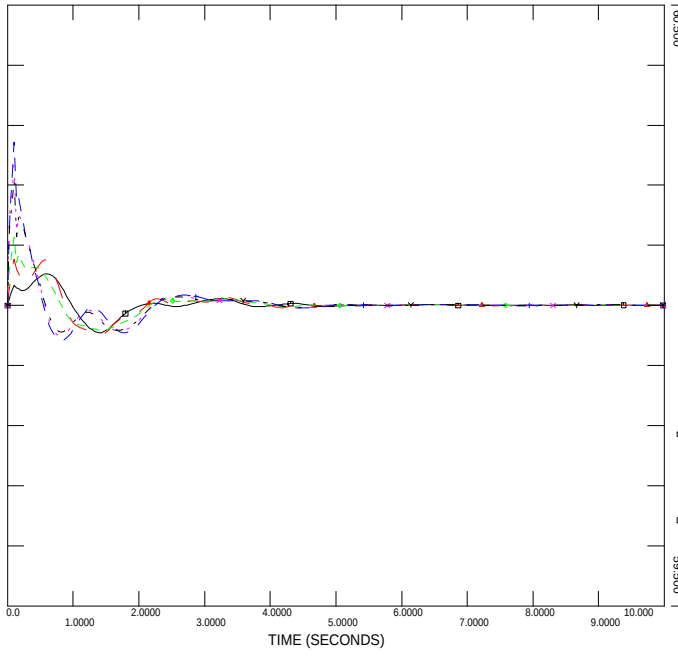

"345KV VOLTAGE"

FREQUENCY HZ

2013 WINTER PEAK STORA MIN
NS-NB=0; NB-NE=500; CBX=732; ONI=961 ONS=851
1 PHASE FAULT L6005/L6016 AT 120H, CLEARED IN
6 CYCLES, NO RECLOSING
FILE: b103-L6005+L6016_DCT_nrecl-2013WP-NS-0.out
CHNL# 145: [VOLT199193 [HWAS_138.00]]
CHNL# 144: [VOLT199165 [TUFTCOVE138.00]]
CHNL# 143: [VOLT199138 [SPRNGHLL138.00]]
CHNL# 142: [VOLT199090 [SON-TREN138.00]]
CHNL# 141: [VOLT199051 [HASTINGS138.00]]
CHNL# 146: [VOLT199280 [TUSKET_A138.00]]
1.2000
0.70000
0.0
1.0000
2.0000
3.0000
4.0000
5.0000
6.0000
7.0000
8.0000
9.0000
10.000
TIME (SECONDS)
THU, JAN 29 2009 15:52
138KV BUS VOLTS

2013 WINTER PEAK STORA MIN
NS-NB=0; NB-NE=500; CBX=732; ONI=961 ONS=851
1 PHASE FAULT L6005/L6016 AT 120H, CLEARED IN
6 CYCLES, NO RECLOSING
FILE: b103-L6005+L6016_DCT_nrecl-2013WP-NS-0.out
CHNL# 139: [VOLT199200 [BRUSHY_230.00]]
CHNL# 138: [VOLT199130 [ONSLOW_230.00]]
CHNL# 137: [VOLT199050 [HASTINGS230.00]]
CHNL# 136: [VOLT199044 [PT.ACONI230.00]]
CHNL# 135: [VOLT199000 [LINGAN_230.00]]
CHNL# 140: [VOLT199240 [BWATER_A230.00]]
1.2000
0.70000
0.0
1.0000
2.0000
3.0000
4.0000
5.0000
6.0000
7.0000
8.0000
9.0000
10.000
TIME (SECONDS)
THU, JAN 29 2009 15:52
230KV BUS VOLTS

2013 WINTER PEAK STORA MIN
NS-NB=0; NB-NE=500; CBX=732; ONI=961 ONS=851
1 PHASE FAULT L6005/L6016 AT 120H, CLEARED IN
6 CYCLES, NO RECLOSING
FILE: b103-L6005+L6016_DCT_nrecl-2013WP-NS-0.out
CHNL# 197: [L8003MW1]
CHNL# 195: [L8004MW1]
CHNL# 193: [L8001MW1]
CHNL# 221: [L3001MW1]
CHNL# 215: [L6503MW1]
CHNL# 217: [L6533MW1]
250.00
500.00
1000.0
-250.0
0.0
-1000.
0.0
1.0000
2.0000
3.0000
4.0000
5.0000
6.0000
7.0000
8.0000
9.0000
10.000
TIME (SECONDS)
THU, JAN 29 2009 15:52
LINE FLOW MW

2013 WINTER PEAK STORA MIN
NS-NB=0; NB-NE=500; CBX=732; ONI=961 ONS=851
1 PHASE FAULT L6005/L6016 AT 120H, CLEARED IN
6 CYCLES, NO RECLOSING
FILE: b103-L6005+L6016_DCT_nrecl-2013WP-NS-0.out
CHNL# 153: [IR137-STATIG25.0 VOLTS]
CHNL# 152: [IR114-GLENDH138.0 VOLTS]
CHNL# 151: [IR84-DALHOHV230.0 VOLTS]
CHNL# 150: [IR82_NUTBHV69.0 VOLTS]
CHNL# 149: [IR45_AMHERTP138.0 VOLTS]
CHNL# 154: [IR141-DIGBYH69.0 VOLTS]
1.2000
0.70000
0.0
1.0000
2.0000
3.0000
4.0000
5.0000
6.0000
7.0000
8.0000
9.0000
10.000
TIME (SECONDS)
THU, JAN 29 2009 15:52
WIND BUS VOLTS

2013 WINTER PEAK STORA MIN
NS-NB=0; NB-NE=500; CBX=732; ONI=961 ONS=851
1 PHASE FAULT L6003/L6009 AT 90H, CLEARED IN
6 CYCLES, NO RECLOSING
FILE: b104-L6003+L6009_DCT_nrecl-2013WP-NS-0.out
CHNL#S 20:4 [ANGL199189 [TUFTCV3 14.400] [3]] [ANGL156661 [DARL G1 22.000] [1
CHNL#S 17:4 [ANGL199086 [TRENTON613.800] [6]] [ANGL156661 [DARL G1 22.000] [1
CHNL#S 16:4 [ANGL199085 [TRENTN5 13.800] [5]] [ANGL156661 [DARL G1 22.000] [1
CHNL#S 15:4 [ANGL199061 [TMP1 STO13.800] [1]] [ANGL156661 [DARL G1 22.000] [1
CHNL#S 13:4 [ANGL199043 [ACONIG1 20.000] [1]] [ANGL156661 [DARL G1 22.000] [1
CHNL#S 11:4 [ANGL199001 [LINGAN1 14.400] [1]] [ANGL156661 [DARL G1 22.000] [1
TIME (SECONDS)
THU, JAN 29 2009 15:52
NS ANGLE

2013 WINTER PEAK STORA MIN
NS-NB=0; NB-NE=500; CBX=732; ONI=961 ONS=851
1 PHASE FAULT L6003/L6009 AT 90H, CLEARED IN
6 CYCLES, NO RECLOSING
FILE: b104-L6003+L6009_DCT_nrecl-2013WP-NS-0.out
CHNL#S 10:4 [ANGL190472 [BLLDNG2 19.000] [1]] [ANGL156661 [DARL G1 22.000] [1
CHNL#S 6:4 [ANGL190456 [LEPRG1 26.000] [1]] [ANGL156661 [DARL G1 22.000] [1
CHNL#S 5:4 [ANGL190450 [MACTG1 13.800] [1]] [ANGL156661 [DARL G1 22.000] [1
CHNL#S 3:4 [ANGL126652 [RAV 3 22.000] [1]] [ANGL156661 [DARL G1 22.000] [1
CHNL#S 2:4 [ANGL101063 [MYST G7 22.000] [1]] [ANGL156661 [DARL G1 22.000] [1
CHNL#S 7:4 [ANGL190457 [C.CVG1 19.000] [1]] [ANGL156661 [DARL G1 22.000] [1
TIME (SECONDS)
THU, JAN 29 2009 15:52
"NE,NY,NB ANGLE"

2013 WINTER PEAK STORA MIN
NS-NB=0; NB-NE=500; CBX=732; ONI=961 ONS=851
1 PHASE FAULT L6003/L6009 AT 90H, CLEARED IN
6 CYCLES, NO RECLOSING
FILE: b104-L6003+L6009_DCT_nrecl-2013WP-NS-0.out
CHNL# 59: [POWR199189 [TUFTCV3 14.400] [3]]
CHNL# 56: [POWR199086 [TRENTON613.800] [6]]
CHNL# 55: [POWR199085 [TRENTN5 13.800] [5]]
CHNL# 54: [POWR199061 [TMP1 STO13.800] [1]]
CHNL# 52: [POWR199043 [ACONIG1 20.000] [1]]
CHNL# 50: [POWR199001 [LINGAN1 14.400] [1]]
TIME (SECONDS)
THU, JAN 29 2009 15:52
NS MW

2013 WINTER PEAK STORA MIN
NS-NB=0; NB-NE=500; CBX=732; ONI=961 ONS=851
1 PHASE FAULT L6003/L6009 AT 90H, CLEARED IN
6 CYCLES, NO RECLOSING
FILE: b104-L6003+L6009_DCT_nrecl-2013WP-NS-0.out
CHNL# 49: [POWER190472 [BLLDNG2 19.000] [1]]
CHNL# 45: [POWER190456 [LEPRG1 26.000] [1]]
CHNL# 44: [POWER190450 [MACTG1 13.800] [1]]
CHNL# 42: [POWER126652 [RAV 3 22.000] [1]]
CHNL# 41: [POWER101063 [MYST G7 22.000] [1]]
CHNL# 46: [POWER190457 [C.CVG1 19.000] [1]]
TIME (SECONDS)
THU, JAN 29 2009 15:52
"NE,NY,NB POWER"

2013 WINTER PEAK STORA MIN
NS-NB=0; NB-NE=500; CBX=732; ONI=961 ONS=851
1 PHASE FAULT L6003/L6009 AT 90H, CLEARED IN
6 CYCLES, NO RECLOSING
FILE: b104-L6003+L6009_DCT_nrecl-2013WP-NS-0.out
CHNL# 119: [VARS IR141-DIGBY]
CHNL# 118: [VARS IR137-STATIA]
CHNL# 117: [VARS IR114-GLENDHU]
CHNL# 116: [VARS IR84-DALHOUSIE]
CHNL# 115: [VARS IR82_NUTTBY]
CHNL# 114: [VARS IR45_AMHERST]
TIME (SECONDS)
THU, JAN 29 2009 15:52
NS WIND MV

2013 WINTER PEAK STORA MIN
NS-NB=0; NB-NE=500; CBX=732; ONI=961 ONS=851
1 PHASE FAULT L6003/L6009 AT 90H, CLEARED IN
6 CYCLES, NO RECLOSING
FILE: b104-L6003+L6009_DCT_nrecl-2013WP-NS-0.out
CHNL# 79: [POWER IR141-DIGBY]
CHNL# 78: [POWER IR137-STATIA]
CHNL# 77: [POWER IR114-GLENDHU]
CHNL# 76: [POWER IR84-DALHOUSIE]
CHNL# 75: [POWER IR82_NUTTBY]
CHNL# 74: [POWER IR45_AMHERST]
TIME (SECONDS)
THU, JAN 29 2009 15:52
NS WIND MW

2013 WINTER PEAK STORA MIN
NS-NB=0; NB-NE=500; CBX=732; ONI=961 ONS=851
1 PHASE FAULT L6003/L6009 AT 90H, CLEARED IN
6 CYCLES, NO RECLOSING
FILE: b104-L6003+L6009_DCT_nrecl-2013WP-NS-0.out
CHNL# 133: [VOLT199125 [ONSLOW 345.00]]
CHNL# 132: [VOLT199120 [HOPEWELL345.00]]
CHNL# 131: [VOLT199045 [WOODBINE345.00]]
CHNL# 130: [VOLT190320 [SALBRY 345.00]]
CHNL# 128: [VOLT190004 [KESWICK 345.00]]
CHNL# 127: [VOLT 70002 [ORRINGTN345.00]]
TIME (SECONDS)
THU, JAN 29 2009 15:52
"345KV VOLTAGE"

2013 WINTER PEAK STORA MIN
NS-NB=0; NB-NE=500; CBX=732; ONI=961 ONS=851
1 PHASE FAULT L6003/L6009 AT 90H, CLEARED IN
6 CYCLES, NO RECLOSING
FILE: b104-L6003+L6009_DCT_nrecl-2013WP-NS-0.out
CHNL# 125: 60*(1+[FREQ199125 [ONSLOW 345.00]])
CHNL# 124: 60*(1+[FREQ199120 [HOPEWELL345.00]])
CHNL# 123: 60*(1+[FREQ199045 [WOODBINE345.00]])
CHNL# 122: 60*(1+[FREQ190320 [SALBRY 345.00]])
CHNL# 121: 60*(1+[FREQ190197 [C.COVE 345.00]])
CHNL# 120: 60*(1+[FREQ 70002 [ORRINGTN345.00]])
TIME (SECONDS)
THU, JAN 29 2009 15:52
FREQUENCY HZ

2013 WINTER PEAK STORA MIN
NS-NB=0; NB-NE=500; CBX=732; ONI=961 ONS=851
1 PHASE FAULT L6003/L6009 AT 90H, CLEARED IN
6 CYCLES, NO RECLOSING
FILE: b104-L6003+L6009_DCT_nrecl-2013WP-NS-0.out
CHNL# 146: [VOLT199280 [TUSKET A138.00]]
CHNL# 145: [VOLT199193 [HHWAS 138.00]]
CHNL# 144: [VOLT199165 [TUFTCOVE138.00]]
CHNL# 143: [VOLT199138 [SPRNGHILL138.00]]
CHNL# 142: [VOLT199090 [SON-TREN138.00]]
CHNL# 141: [VOLT199051 [HASTINGS138.00]]
1.2000
0.70000
0.0
1.0000
2.0000
3.0000
4.0000
5.0000
6.0000
7.0000
8.0000
9.0000
10.000
TIME (SECONDS)
THU, JAN 29 2009 15:52
138KV BUS VOLTS

2013 WINTER PEAK STORA MIN
NS-NB=0; NB-NE=500; CBX=732; ONI=961 ONS=851
1 PHASE FAULT L6003/L6009 AT 90H, CLEARED IN
6 CYCLES, NO RECLOSING
FILE: b104-L6003+L6009_DCT_nrecl-2013WP-NS-0.out
CHNL# 140: [VOLT199240 [BWATER A230.00]]
CHNL# 139: [VOLT199200 [BRUSHY 230.00]]
CHNL# 138: [VOLT199130 [ONSLOW 230.00]]
CHNL# 137: [VOLT199050 [HASTINGS230.00]]
CHNL# 136: [VOLT199044 [PT.ACONI230.00]]
CHNL# 135: [VOLT199000 [LINGAN 230.00]]
1.2000
0.70000
0.0
1.0000
2.0000
3.0000
4.0000
5.0000
6.0000
7.0000
8.0000
9.0000
10.000
TIME (SECONDS)
THU, JAN 29 2009 15:52
230KV BUS VOLTS

2013 WINTER PEAK STORA MIN
NS-NB=0; NB-NE=500; CBX=732; ONI=961 ONS=851
1 PHASE FAULT L6003/L6009 AT 90H, CLEARED IN
6 CYCLES, NO RECLOSING
FILE: b104-L6003+L6009_DCT_nrecl-2013WP-NS-0.out
CHNL# 217: [L6533MW]
CHNL# 215: [L6503MW]
CHNL# 197: [L8003MW]
CHNL# 195: [L8004MW]
CHNL# 193: [L8001MW]
CHNL# 221: [L3001MW]
250.00
-250.0
500.00
0.0
1000.0
-1000.
0.0
1.0000
2.0000
3.0000
4.0000
5.0000
6.0000
7.0000
8.0000
9.0000
10.000
TIME (SECONDS)
THU, JAN 29 2009 15:52
LINE FLOW MW

2013 WINTER PEAK STORA MIN
NS-NB=0; NB-NE=500; CBX=732; ONI=961 ONS=851
1 PHASE FAULT L6003/L6009 AT 90H, CLEARED IN
6 CYCLES, NO RECLOSING
FILE: b104-L6003+L6009_DCT_nrecl-2013WP-NS-0.out
CHNL# 154: [IR141-DIGBYH69.0 VOLTS]
CHNL# 153: [IR137-STATIG25.0 VOLTS]
CHNL# 152: [IR114-GLENDH138.0 VOLTS]
CHNL# 151: [IR84-DALHOHV230.0 VOLTS]
CHNL# 150: [IR82_NUTBHV69.0 VOLTS]
CHNL# 149: [IR45_AMHERTP138.0 VOLTS]
1.2000
0.70000
0.0
1.0000
2.0000
3.0000
4.0000
5.0000
6.0000
7.0000
8.0000
9.0000
10.000
TIME (SECONDS)
THU, JAN 29 2009 15:52
WIND BUS VOLTS

2013 WINTER PEAK STORA MIN
NS-NB=0; NB-NE=500; CBX=732; ONI=961 ONS=851
1 PHASE FAULT L6003/L6007 AT 91H, CLEARED IN 6 CY
FAULT IMPEDANCE WITH ALL GENERATION ON
FILE: b105a-L6003+L6007_DCT_nrect-2013WP-NS-0.out
CHNL# 20: [ANGL199169 [TUFTCV3 14.400] [3]] [ANGL156661 [DARL G1 22.000] [1]
CHNL# 17: [ANGL199086 [TRENTON613.800] [6]] [ANGL156661 [DARL G1 22.000] [1]
CHNL# 16: [ANGL199085 [TRENTN5 13.800] [5]] [ANGL156661 [DARL G1 22.000] [1]
CHNL# 15: [ANGL199061 [TMP1 STO13.800] [1]] [ANGL156661 [DARL G1 22.000] [1]
CHNL# 13: [ANGL199043 [ACONIG1 20.000] [1]] [ANGL156661 [DARL G1 22.000] [1]
CHNL# 11: [ANGL199001 [LINGAN1 14.400] [1]] [ANGL156661 [DARL G1 22.000] [1]
100.00
-100.0
50.000
-150.0
0.0
1.0000
2.0000
3.0000
4.0000
5.0000
6.0000
7.0000
8.0000
9.0000
10.000
TIME (SECONDS)
THU, JAN 29 2009 15:52
NS ANGLE

2013 WINTER PEAK STORA MIN
NS-NB=0; NB-NE=500; CBX=732; ONI=961 ONS=851
1 PHASE FAULT L6003/L6007 AT 91H, CLEARED IN 6 CY
FAULT IMPEDANCE WITH ALL GENERATION ON
FILE: b105a-L6003+L6007_DCT_nrect-2013WP-NS-0.out
CHNL# 10: [ANGL190472 [BLLDNG2 19.000] [1]] [ANGL156661 [DARL G1 22.000] [1]
CHNL# 6: [ANGL190456 [LEPRG1 26.000] [1]] [ANGL156661 [DARL G1 22.000] [1]
CHNL# 5: [ANGL190450 [MACTG1 13.800] [1]] [ANGL156661 [DARL G1 22.000] [1]
CHNL# 3: [ANGL126652 [RAV 3 22.000] [1]] [ANGL156661 [DARL G1 22.000] [1]
CHNL# 2: [ANGL101063 [MYST G7 22.000] [1]] [ANGL156661 [DARL G1 22.000] [1]
CHNL# 7: [ANGL190457 [C.CVG1 19.000] [1]] [ANGL156661 [DARL G1 22.000] [1]
100.00
-100.0
0.0
1.0000
2.0000
3.0000
4.0000
5.0000
6.0000
7.0000
8.0000
9.0000
10.000
TIME (SECONDS)
THU, JAN 29 2009 15:52
"NE,NY,NB ANGLE"

2013 WINTER PEAK STORA MIN
NS-NB=0; NB-NE=500; CBX=732; ONI=961 ONS=851
1 PHASE FAULT L6003/L6007 AT 91H, CLEARED IN 6 CY
FAULT IMPEDANCE WITH ALL GENERATION ON
FILE: b105a-L6003+L6007_DCT_nrect-2013WP-NS-0.out
CHNL# 59: [POWR199169 [TUFTCV3 14.400] [3]]
CHNL# 56: [POWR199086 [TRENTON613.800] [6]]
CHNL# 55: [POWR199085 [TRENTN5 13.800] [5]]
CHNL# 54: [POWR199061 [TMP1 STO13.800] [1]]
CHNL# 52: [POWR199043 [ACONIG1 20.000] [1]]
CHNL# 50: [POWR199001 [LINGAN1 14.400] [1]]
2.5000
0.0
1.0000
-1.500
2.0000
3.0000
4.0000
5.0000
6.0000
7.0000
8.0000
9.0000
10.000
TIME (SECONDS)
THU, JAN 29 2009 15:52
NS MW

2013 WINTER PEAK STORA MIN
NS-NB=0; NB-NE=500; CBX=732; ONI=961 ONS=851
1 PHASE FAULT L6003/L6007 AT 91H, CLEARED IN 6 CY
FAULT IMPEDANCE WITH ALL GENERATION ON
FILE: b105a-L6003+L6007_DCT_nrect-2013WP-NS-0.out
CHNL# 49: [POWER190472 [BLLDNG2 19.000] [1]]
CHNL# 45: [POWER190456 [LEPRG1 26.000] [1]]
CHNL# 44: [POWER190450 [MACTG1 13.800] [1]]
CHNL# 42: [POWER126652 [RAV 3 22.000] [1]]
CHNL# 41: [POWER101063 [MYST G7 22.000] [1]]
CHNL# 46: [POWER190457 [C.CVG1 19.000] [1]]
7.0000
2.0000
9.0000
4.0000
5.0000
0.0
6.5000
1.0000
5.0000
0.0
1.0000
2.0000
3.0000
4.0000
5.0000
6.0000
7.0000
8.0000
9.0000
10.000
TIME (SECONDS)
THU, JAN 29 2009 15:52
"NE,NY,NB POWER"

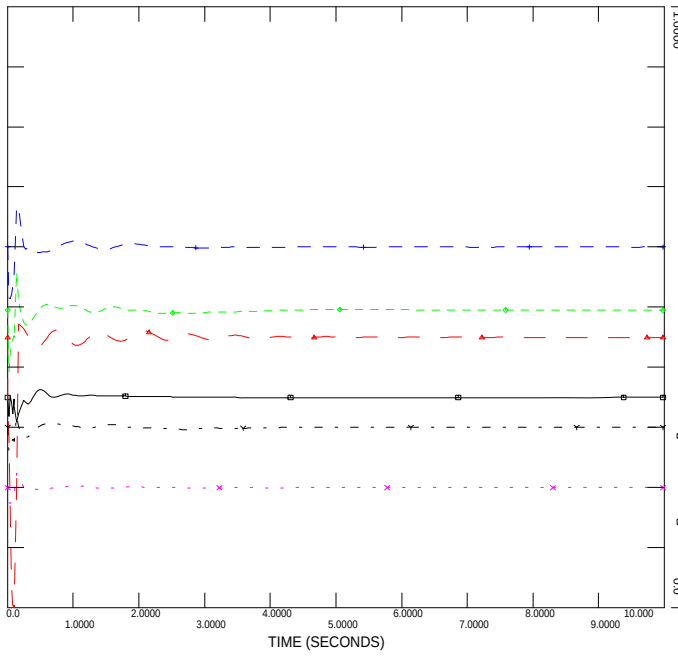

NS WIND MV

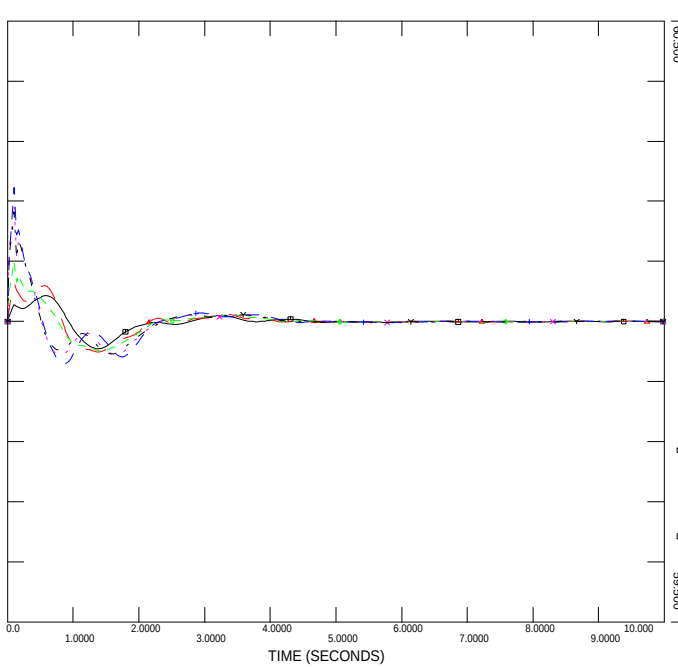

NS WIND MW

"345KV VOLTAGE"

FREQUENCY HZ

2013 WINTER PEAK STORA MIN
NS-NB=0; NB-NE=500; CBX=732; ONI=961 ONS=851
1 PHASE FAULT L6003/L6007 AT 91H, CLEARED IN 6 CY
FAULT IMPEDANCE WITH ALL GENERATION ON
FILE: b105a-L6003+L6007_DCT_nrect-2013WP-NS-0.out
CHNL# 146: [VOLT199280 [TUSKET A138.00]]
CHNL# 145: [VOLT199193 [HHWAS 138.00]]
CHNL# 144: [VOLT199165 [TUFTCOVE138.00]]
CHNL# 143: [VOLT199138 [SPRNGHLL138.00]]
CHNL# 142: [VOLT199090 [SON-TREN138.00]]
CHNL# 141: [VOLT199051 [HASTINGS138.00]]
1.2000
0.70000
0.0
1.0000
2.0000
3.0000
4.0000
5.0000
6.0000
7.0000
8.0000
9.0000
10.000
TIME (SECONDS)
THU, JAN 29 2009 15:52
138KV BUS VOLTS

2013 WINTER PEAK STORA MIN
NS-NB=0; NB-NE=500; CBX=732; ONI=961 ONS=851
1 PHASE FAULT L6003/L6007 AT 91H, CLEARED IN 6 CY
FAULT IMPEDANCE WITH ALL GENERATION ON
FILE: b105a-L6003+L6007_DCT_nrect-2013WP-NS-0.out
CHNL# 140: [VOLT199240 [BWATER A230.00]]
CHNL# 139: [VOLT199200 [BRUSHY 230.00]]
CHNL# 138: [VOLT199130 [ONSLOW 230.00]]
CHNL# 137: [VOLT199050 [HASTINGS230.00]]
CHNL# 136: [VOLT199044 [PT.ACONI230.00]]
CHNL# 135: [VOLT199000 [LINGAN 230.00]]
1.2000
0.70000
0.0
1.0000
2.0000
3.0000
4.0000
5.0000
6.0000
7.0000
8.0000
9.0000
10.000
TIME (SECONDS)
THU, JAN 29 2009 15:52
230KV BUS VOLTS

2013 WINTER PEAK STORA MIN
NS-NB=0; NB-NE=500; CBX=732; ONI=961 ONS=851
1 PHASE FAULT L6003/L6007 AT 91H, CLEARED IN 6 CY
FAULT IMPEDANCE WITH ALL GENERATION ON
FILE: b105a-L6003+L6007_DCT_nrect-2013WP-NS-0.out
CHNL# 217: [L6533MW]
CHNL# 215: [L6503MW]
CHNL# 197: [L8003MW]
CHNL# 195: [L8004MW]
CHNL# 193: [L8001MW]
CHNL# 221: [L3001MW]
250.00
500.00
1000.0
0.0
-250.0
-1000.
0.0
1.0000
2.0000
3.0000
4.0000
5.0000
6.0000
7.0000
8.0000
9.0000
10.000
TIME (SECONDS)
THU, JAN 29 2009 15:52
LINE FLOW MW

2013 WINTER PEAK STORA MIN
NS-NB=0; NB-NE=500; CBX=732; ONI=961 ONS=851
1 PHASE FAULT L6003/L6007 AT 91H, CLEARED IN 6 CY
FAULT IMPEDANCE WITH ALL GENERATION ON
FILE: b105a-L6003+L6007_DCT_nrect-2013WP-NS-0.out
CHNL# 154: [IR141-DIGBYH69.0 VOLTS]
CHNL# 153: [IR137-STATIG25.0 VOLTS]
CHNL# 152: [IR114-GLENDH138.0 VOLTS]
CHNL# 151: [IR84-DALHOHV230.0 VOLTS]
CHNL# 150: [IR82_NUTBHV69.0 VOLTS]
CHNL# 149: [IR45_AMHERTP138.0 VOLTS]
1.2000
0.70000
0.0
1.0000
2.0000
3.0000
4.0000
5.0000
6.0000
7.0000
8.0000
9.0000
10.000
TIME (SECONDS)
THU, JAN 29 2009 15:52
WIND BUS VOLTS

2013 WINTER PEAK STORA MIN
NS-NB=0; NB-NE=500; CBX=732; ONI=961 ONS=851
1 PHASE FAULT L6003/L6007 AT 91H, CLEARED IN 6 CY
FAULT IMPEDANCE WITH BURNSIDE GENERATION OFF
FILE: b105b-L6003+L6007_DCT_nrect-2013WP-NS-0.out
CHNL# 20: [ANGL199169 [TUFTCV3 14.400] [3]] [ANGL156661 [DARL G1 22.000] [1]
CHNL# 17: [ANGL199086 [TRENTON613.800] [6]] [ANGL156661 [DARL G1 22.000] [1]
CHNL# 16: [ANGL199085 [TRENTN5 13.800] [5]] [ANGL156661 [DARL G1 22.000] [1]
CHNL# 15: [ANGL199061 [TMP1 STO13.800] [1]] [ANGL156661 [DARL G1 22.000] [1]
CHNL# 13: [ANGL199043 [ACONIG1 20.000] [1]] [ANGL156661 [DARL G1 22.000] [1]
CHNL# 11: [ANGL199001 [LINGAN1 14.400] [1]] [ANGL156661 [DARL G1 22.000] [1]
100.00
-100.0
50.000
-150.0
0.0
1.0000
2.0000
3.0000
4.0000
5.0000
6.0000
7.0000
8.0000
9.0000
10.000
TIME (SECONDS)
THU, JAN 29 2009 15:52
NS ANGLE

2013 WINTER PEAK STORA MIN
NS-NB=0; NB-NE=500; CBX=732; ONI=961 ONS=851
1 PHASE FAULT L6003/L6007 AT 91H, CLEARED IN 6 CY
FAULT IMPEDANCE WITH BURNSIDE GENERATION OFF
FILE: b105b-L6003+L6007_DCT_nrect-2013WP-NS-0.out
CHNL# 10: [ANGL190472 [BLLDNG2 19.000] [1]] [ANGL156661 [DARL G1 22.000] [1]
CHNL# 6: [ANGL190456 [LEPRG1 26.000] [1]] [ANGL156661 [DARL G1 22.000] [1]
CHNL# 5: [ANGL190450 [MACTG1 13.800] [1]] [ANGL156661 [DARL G1 22.000] [1]
CHNL# 3: [ANGL126652 [RAV 3 22.000] [1]] [ANGL156661 [DARL G1 22.000] [1]
CHNL# 2: [ANGL101063 [MYST G7 22.000] [1]] [ANGL156661 [DARL G1 22.000] [1]
CHNL# 7: [ANGL190457 [C.CVG1 19.000] [1]] [ANGL156661 [DARL G1 22.000] [1]
100.00
-100.0
0.0
1.0000
2.0000
3.0000
4.0000
5.0000
6.0000
7.0000
8.0000
9.0000
10.000
TIME (SECONDS)
THU, JAN 29 2009 15:52
"NE,NY,NB ANGLE"

2013 WINTER PEAK STORA MIN
NS-NB=0; NB-NE=500; CBX=732; ONI=961 ONS=851
1 PHASE FAULT L6003/L6007 AT 91H, CLEARED IN 6 CY
FAULT IMPEDANCE WITH BURNSIDE GENERATION OFF
FILE: b105b-L6003+L6007_DCT_nrect-2013WP-NS-0.out
CHNL# 59: [POWER199169 [TUFTCV3 14.400] [3]]
CHNL# 56: [POWER199086 [TRENTON613.800] [6]]
CHNL# 55: [POWER199085 [TRENTN5 13.800] [5]]
CHNL# 54: [POWER199061 [TMP1 STO13.800] [1]]
CHNL# 52: [POWER199043 [ACONIG1 20.000] [1]]
CHNL# 50: [POWER199001 [LINGAN1 14.400] [1]]
2.5000
0.0
1.0000
-1.500
2.0000
3.0000
4.0000
5.0000
6.0000
7.0000
8.0000
9.0000
10.000
TIME (SECONDS)
THU, JAN 29 2009 15:52
NS MW

2013 WINTER PEAK STORA MIN
NS-NB=0; NB-NE=500; CBX=732; ONI=961 ONS=851
1 PHASE FAULT L6003/L6007 AT 91H, CLEARED IN 6 CY
FAULT IMPEDANCE WITH BURNSIDE GENERATION OFF
FILE: b105b-L6003+L6007_DCT_nrect-2013WP-NS-0.out
CHNL# 49: [POWER190472 [BLLDNG2 19.000] [1]]
CHNL# 45: [POWER190456 [LEPRG1 26.000] [1]]
CHNL# 44: [POWER190450 [MACTG1 13.800] [1]]
CHNL# 42: [POWER126652 [RAV 3 22.000] [1]]
CHNL# 41: [POWER101063 [MYST G7 22.000] [1]]
CHNL# 46: [POWER190457 [C.CVG1 19.000] [1]]
7.0000
2.0000
9.0000
4.0000
5.0000
0.0
6.5000
1.0000
5.0000
0.0
1.0000
2.0000
3.0000
4.0000
5.0000
6.0000
7.0000
8.0000
9.0000
10.000
TIME (SECONDS)
THU, JAN 29 2009 15:52
"NE,NY,NB POWER"

NS WIND MV

NS WIND MW

"345KV VOLTAGE"

FREQUENCY HZ

2013 WINTER PEAK STORA MIN
NS-NB=0; NB-NE=500; CBX=732; ONI=961 ONS=851
1 PHASE FAULT L6003/L6007 AT 91H, CLEARED IN 6 CY
FAULT IMPEDANCE WITH BURNSIDE GENERATION OFF
FILE: b105b-L6003+L6007_DCT_nrect-2013WP-NS-0.out
CHNL# 146: [VOLT199280 [TUSKET A138.00]]
CHNL# 145: [VOLT199193 [HHWAS 138.00]]
CHNL# 144: [VOLT199165 [TUFTCOVE138.00]]
CHNL# 143: [VOLT199135 [SPRNGHLL138.00]]
CHNL# 142: [VOLT199090 [SON-TREN138.00]]
CHNL# 141: [VOLT199051 [HASTINGS138.00]]
1.2000
0.70000
0.0
1.0000
2.0000
3.0000
4.0000
5.0000
6.0000
7.0000
8.0000
9.0000
10.000
TIME (SECONDS)
THU, JAN 29 2009 15:52
138KV BUS VOLTS

2013 WINTER PEAK STORA MIN
NS-NB=0; NB-NE=500; CBX=732; ONI=961 ONS=851
1 PHASE FAULT L6003/L6007 AT 91H, CLEARED IN 6 CY
FAULT IMPEDANCE WITH BURNSIDE GENERATION OFF
FILE: b105b-L6003+L6007_DCT_nrect-2013WP-NS-0.out
CHNL# 140: [VOLT199240 [BWATER A230.00]]
CHNL# 139: [VOLT199200 [BRUSHY 230.00]]
CHNL# 138: [VOLT199130 [ONSLOW 230.00]]
CHNL# 137: [VOLT199050 [HASTINGS230.00]]
CHNL# 136: [VOLT199044 [PT.ACONI230.00]]
CHNL# 135: [VOLT199000 [LINGAN 230.00]]
1.2000
0.70000
0.0
1.0000
2.0000
3.0000
4.0000
5.0000
6.0000
7.0000
8.0000
9.0000
10.000
TIME (SECONDS)
THU, JAN 29 2009 15:52
230KV BUS VOLTS

2013 WINTER PEAK STORA MIN
NS-NB=0; NB-NE=500; CBX=732; ONI=961 ONS=851
1 PHASE FAULT L6003/L6007 AT 91H, CLEARED IN 6 CY
FAULT IMPEDANCE WITH BURNSIDE GENERATION OFF
FILE: b105b-L6003+L6007_DCT_nrect-2013WP-NS-0.out
CHNL# 217: [L6533MW]
CHNL# 215: [L6503MW]
CHNL# 197: [L8003MW]
CHNL# 195: [L8004MW]
CHNL# 193: [L8001MW]
CHNL# 221: [L3001MW]
250.00
500.00
1000.0
-250.0
0.0
-500.
-1000.
0.0
1.0000
2.0000
3.0000
4.0000
5.0000
6.0000
7.0000
8.0000
9.0000
10.000
TIME (SECONDS)
THU, JAN 29 2009 15:52
LINE FLOW MW

2013 WINTER PEAK STORA MIN
NS-NB=0; NB-NE=500; CBX=732; ONI=961 ONS=851
1 PHASE FAULT L6003/L6007 AT 91H, CLEARED IN 6 CY
FAULT IMPEDANCE WITH BURNSIDE GENERATION OFF
FILE: b105b-L6003+L6007_DCT_nrect-2013WP-NS-0.out
CHNL# 154: [IR141-DIGBYH69.0 VOLTS]
CHNL# 153: [IR137-STATIG25.0 VOLTS]
CHNL# 152: [IR114-GLENDH138.0 VOLTS]
CHNL# 151: [IR84-DALHOHV230.0 VOLTS]
CHNL# 150: [IR82_NUTBHV69.0 VOLTS]
CHNL# 149: [IR45_AMHERTP138.0 VOLTS]
1.2000
0.70000
0.0
1.0000
2.0000
3.0000
4.0000
5.0000
6.0000
7.0000
8.0000
9.0000
10.000
TIME (SECONDS)
THU, JAN 29 2009 15:52
WIND BUS VOLTS

2013 WINTER PEAK STORA MIN
NS-NB=0; NB-NE=500; CBX=732; ONI=961 ONS=851
1 PHASE FAULT L6003/L6007 AT 91H, CLEARED IN 6 CY
FAULT IMPEDANCE WITH BURNSIDE AND TC 1+2 OFF
FILE: b105c-L6003+L6007_DCT_nrect-2013WP-NS-0.out
CHNL# 20: [ANGL199169 [TUFTCV3 14.400] [3]] [ANGL156661 [DARL G1 22.000] [1
CHNL# 17: [ANGL199086 [TRENTON613.800] [6]] [ANGL156661 [DARL G1 22.000] [1
CHNL# 16: [ANGL199085 [TRENTN5 13.800] [5]] [ANGL156661 [DARL G1 22.000] [1
CHNL# 15: [ANGL199061 [TMP1 STO13.800] [1]] [ANGL156661 [DARL G1 22.000] [1
CHNL# 13: [ANGL199043 [ACONIG1 20.000] [1]] [ANGL156661 [DARL G1 22.000] [1
CHNL# 11: [ANGL199001 [LINGAN1 14.400] [1]] [ANGL156661 [DARL G1 22.000] [1
100.00
-100.0
50.000
-150.0
0.0
1.0000
2.0000
3.0000
4.0000
5.0000
6.0000
7.0000
8.0000
9.0000
10.000
TIME (SECONDS)
THU, JAN 29 2009 15:52
NS ANGLE

2013 WINTER PEAK STORA MIN
NS-NB=0; NB-NE=500; CBX=732; ONI=961 ONS=851
1 PHASE FAULT L6003/L6007 AT 91H, CLEARED IN 6 CY
FAULT IMPEDANCE WITH BURNSIDE AND TC 1+2 OFF
FILE: b105c-L6003+L6007_DCT_nrect-2013WP-NS-0.out
CHNL# 10: [ANGL190472 [BLLDNG2 19.000] [1]] [ANGL156661 [DARL G1 22.000] [1
CHNL# 6: [ANGL190456 [LEPRG1 26.000] [1]] [ANGL156661 [DARL G1 22.000] [1
CHNL# 5: [ANGL190450 [MACTG1 13.800] [1]] [ANGL156661 [DARL G1 22.000] [1
CHNL# 3: [ANGL126652 [RAV 3 22.000] [1]] [ANGL156661 [DARL G1 22.000] [1
CHNL# 2: [ANGL101063 [MYST G7 22.000] [1]] [ANGL156661 [DARL G1 22.000] [1
CHNL# 7: [ANGL190457 [C.CVG1 19.000] [1]] [ANGL156661 [DARL G1 22.000] [1
100.00
-100.0
0.0
1.0000
2.0000
3.0000
4.0000
5.0000
6.0000
7.0000
8.0000
9.0000
10.000
TIME (SECONDS)
THU, JAN 29 2009 15:52
"NE,NY,NB ANGLE"

2013 WINTER PEAK STORA MIN
NS-NB=0; NB-NE=500; CBX=732; ONI=961 ONS=851
1 PHASE FAULT L6003/L6007 AT 91H, CLEARED IN 6 CY
FAULT IMPEDANCE WITH BURNSIDE AND TC 1+2 OFF
FILE: b105c-L6003+L6007_DCT_nrect-2013WP-NS-0.out
CHNL# 59: [POWER199169 [TUFTCV3 14.400] [3]]
CHNL# 56: [POWER199086 [TRENTON613.800] [6]]
CHNL# 55: [POWER199085 [TRENTN5 13.800] [5]]
CHNL# 54: [POWER199061 [TMP1 STO13.800] [1]]
CHNL# 52: [POWER199043 [ACONIG1 20.000] [1]]
CHNL# 50: [POWER199001 [LINGAN1 14.400] [1]]
2.5000
0.0
1.0000
-1.500
2.0000
3.0000
4.0000
5.0000
6.0000
7.0000
8.0000
9.0000
10.000
TIME (SECONDS)
THU, JAN 29 2009 15:52
NS MW

2013 WINTER PEAK STORA MIN
NS-NB=0; NB-NE=500; CBX=732; ONI=961 ONS=851
1 PHASE FAULT L6003/L6007 AT 91H, CLEARED IN 6 CY
FAULT IMPEDANCE WITH BURNSIDE AND TC 1+2 OFF
FILE: b105c-L6003+L6007_DCT_nrect-2013WP-NS-0.out
CHNL# 49: [POWER190472 [BLLDNG2 19.000] [1]]
CHNL# 45: [POWER190456 [LEPRG1 26.000] [1]]
CHNL# 44: [POWER190450 [MACTG1 13.800] [1]]
CHNL# 42: [POWER126652 [RAV 3 22.000] [1]]
CHNL# 41: [POWER101063 [MYST G7 22.000] [1]]
CHNL# 46: [POWER190457 [C.CVG1 19.000] [1]]
7.0000
2.0000
9.0000
4.0000
5.0000
0.0
6.5000
1.0000
5.0000
0.0
1.0000
2.0000
3.0000
4.0000
5.0000
6.0000
7.0000
8.0000
9.0000
10.000
TIME (SECONDS)
THU, JAN 29 2009 15:52
"NE,NY,NB POWER"

2013 WINTER PEAK STORA MIN
NS-NB=0; NB-NE=500; CBX=732; ONI=961 ONS=851
1 PHASE FAULT L6003/L6007 AT 91H, CLEARED IN 6 CY
FAULT IMPEDANCE WITH BURNSIDE AND TC 1+2 OFF
FILE: b105c-L6003+L6007_DCT_nrect-2013WP-NS-0.out
CHNL# 119: [VARS IR141-DIGBY]
CHNL# 118: [VARS IR137-STATIA]
CHNL# 117: [VARS IR114-GLENDHU]
CHNL# 116: [VARS IR84-DALHOUSIE]
CHNL# 115: [VARS IR82_NUTTBY]
CHNL# 114: [VARS IR45_AMHERST]
TIME (SECONDS)
THU, JAN 29 2009 15:52
NS WIND MV

2013 WINTER PEAK STORA MIN
NS-NB=0; NB-NE=500; CBX=732; ONI=961 ONS=851
1 PHASE FAULT L6003/L6007 AT 91H, CLEARED IN 6 CY
FAULT IMPEDANCE WITH BURNSIDE AND TC 1+2 OFF
FILE: b105c-L6003+L6007_DCT_nrect-2013WP-NS-0.out
CHNL# 79: [POWER IR141-DIGBY]
CHNL# 78: [POWER IR137-STATIA]
CHNL# 77: [POWER IR114-GLENDHU]
CHNL# 76: [POWER IR84-DALHOUSIE]
CHNL# 75: [POWER IR82_NUTTBY]
CHNL# 74: [POWER IR45_AMHERST]
TIME (SECONDS)
THU, JAN 29 2009 15:52
NS WIND MW

2013 WINTER PEAK STORA MIN
NS-NB=0; NB-NE=500; CBX=732; ONI=961 ONS=851
1 PHASE FAULT L6003/L6007 AT 91H, CLEARED IN 6 CY
FAULT IMPEDANCE WITH BURNSIDE AND TC 1+2 OFF
FILE: b105c-L6003+L6007_DCT_nrect-2013WP-NS-0.out
CHNL# 133: [VOLT199125 [ONSLOW 345.00]]
CHNL# 132: [VOLT199120 [HOPEWELL 345.00]]
CHNL# 131: [VOLT199045 [WOODBINE345.00]]
CHNL# 130: [VOLT190320 [SALBRY 345.00]]
CHNL# 128: [VOLT190004 [KESWICK 345.00]]
CHNL# 127: [VOLT 70002 [ORRINGTN345.00]]
TIME (SECONDS)
THU, JAN 29 2009 15:52
"345KV VOLTAGE"

2013 WINTER PEAK STORA MIN
NS-NB=0; NB-NE=500; CBX=732; ONI=961 ONS=851
1 PHASE FAULT L6003/L6007 AT 91H, CLEARED IN 6 CY
FAULT IMPEDANCE WITH BURNSIDE AND TC 1+2 OFF
FILE: b105c-L6003+L6007_DCT_nrect-2013WP-NS-0.out
CHNL# 125: 60*(1+[FREQ199125 [ONSLOW 345.00]])
CHNL# 124: 60*(1+[FREQ199120 [HOPEWELL 345.00]])
CHNL# 123: 60*(1+[FREQ199045 [WOODBINE345.00]])
CHNL# 122: 60*(1+[FREQ190320 [SALBRY 345.00]])
CHNL# 121: 60*(1+[FREQ190197 [C.COVE 345.00]])
CHNL# 120: 60*(1+[FREQ 70002 [ORRINGTN345.00]])
TIME (SECONDS)
THU, JAN 29 2009 15:52
FREQUENCY HZ

2013 WINTER PEAK STORA MIN
NS-NB=0; NB-NE=500; CBX=732; ONI=961 ONS=851
1 PHASE FAULT L6003/L6007 AT 91H, CLEARED IN 6 CY
FAULT IMPEDANCE WITH BURNSIDE AND TC 1+2 OFF
FILE: b105c-L6003+L6007_DCT_nrect-2013WP-NS-0.out
CHNL# 146: [VOLT199280 [TUSKET A138.00]]
CHNL# 145: [VOLT199193 [HHWAS 138.00]]
CHNL# 144: [VOLT199165 [TUFTCOVE138.00]]
CHNL# 143: [VOLT199138 [SPRNGHIL138.00]]
CHNL# 142: [VOLT199090 [SON-TREN138.00]]
CHNL# 141: [VOLT199051 [HASTINGS138.00]]
1.2000
0.70000
0.0
1.0000
2.0000
3.0000
4.0000
5.0000
6.0000
7.0000
8.0000
9.0000
10.000
TIME (SECONDS)
THU, JAN 29 2009 15:52
138KV BUS VOLTS

2013 WINTER PEAK STORA MIN
NS-NB=0; NB-NE=500; CBX=732; ONI=961 ONS=851
1 PHASE FAULT L6003/L6007 AT 91H, CLEARED IN 6 CY
FAULT IMPEDANCE WITH BURNSIDE AND TC 1+2 OFF
FILE: b105c-L6003+L6007_DCT_nrect-2013WP-NS-0.out
CHNL# 140: [VOLT199240 [BWATER A230.00]]
CHNL# 139: [VOLT199200 [BRUSHY 230.00]]
CHNL# 138: [VOLT199130 [ONSLOW 230.00]]
CHNL# 137: [VOLT199050 [HASTINGS230.00]]
CHNL# 136: [VOLT199044 [PT.ACONI230.00]]
CHNL# 135: [VOLT199000 [LINGAN 230.00]]
1.2000
0.70000
0.0
1.0000
2.0000
3.0000
4.0000
5.0000
6.0000
7.0000
8.0000
9.0000
10.000
TIME (SECONDS)
THU, JAN 29 2009 15:52
230KV BUS VOLTS

2013 WINTER PEAK STORA MIN
NS-NB=0; NB-NE=500; CBX=732; ONI=961 ONS=851
1 PHASE FAULT L6003/L6007 AT 91H, CLEARED IN 6 CY
FAULT IMPEDANCE WITH BURNSIDE AND TC 1+2 OFF
FILE: b105c-L6003+L6007_DCT_nrect-2013WP-NS-0.out
CHNL# 217: [L6533MW]
CHNL# 215: [L6503MW]
CHNL# 197: [L8003MW]
CHNL# 195: [L8004MW]
CHNL# 193: [L8001MW]
CHNL# 221: [L3001MW]
250.00
500.00
1000.0
0.0
-250.0
-1000.
0.70000
0.0
1.0000
2.0000
3.0000
4.0000
5.0000
6.0000
7.0000
8.0000
9.0000
10.000
TIME (SECONDS)
THU, JAN 29 2009 15:52
LINE FLOW MW

2013 WINTER PEAK STORA MIN
NS-NB=0; NB-NE=500; CBX=732; ONI=961 ONS=851
1 PHASE FAULT L6003/L6007 AT 91H, CLEARED IN 6 CY
FAULT IMPEDANCE WITH BURNSIDE AND TC 1+2 OFF
FILE: b105c-L6003+L6007_DCT_nrect-2013WP-NS-0.out
CHNL# 154: [IR141-DIGBYH69.0 VOLTS]
CHNL# 153: [IR137-STATIG25.0 VOLTS]
CHNL# 152: [IR114-GLENDH138.0 VOLTS]
CHNL# 151: [IR84-DALHOHV230.0 VOLTS]
CHNL# 150: [IR82_NUTBHV69.0 VOLTS]
CHNL# 149: [IR45_AMHERTP138.0 VOLTS]
1.2000
0.70000
0.0
1.0000
2.0000
3.0000
4.0000
5.0000
6.0000
7.0000
8.0000
9.0000
10.000
TIME (SECONDS)
THU, JAN 29 2009 15:52
WIND BUS VOLTS

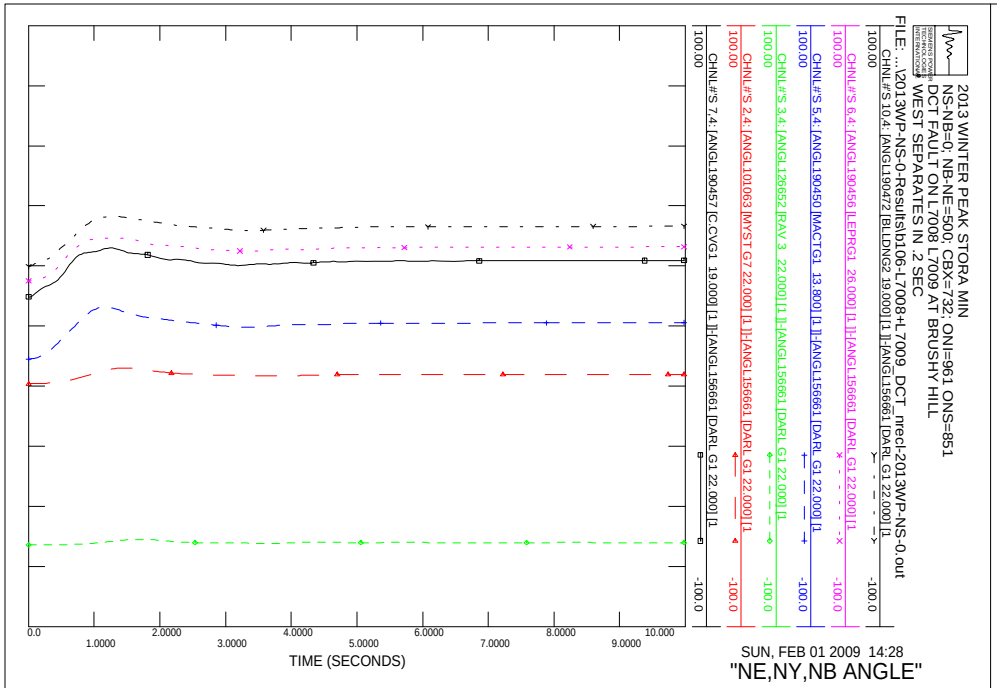
2013 WINTER PEAK STORA MIN
NS-NB=0; NB-NE=500; CBX=732; ONI=961 ONS=851
DCT FAULT ON L7008 L7009 AT BRUSHY HILL
WEST SEPARATES IN .2 SEC
FILE: ...\2013WP-NS-0-Results\b106-L7008+L7009_DCT_nrecl-2013WP-NS-0.out
CHNL#S 10,4: [ANGL190472 [BLLDNG2 19.000] [1]]-[ANGL156661 [DARL G1 22.000] [1
CHNL#S 6,4: [ANGL190456 [LEPRG1 26.000] [1]]-[ANGL156661 [DARL G1 22.000] [1
CHNL#S 5,4: [ANGL190450 [MACTG1 13.800] [1]]-[ANGL156661 [DARL G1 22.000] [1
CHNL#S 3,4: [ANGL126652 [RAV 3 22.000] [1]]-[ANGL156661 [DARL G1 22.000] [1
CHNL#S 2,4: [ANGL101063 [MYST G7 22.000] [1]]-[ANGL156661 [DARL G1 22.000] [1
CHNL#S 7,4: [ANGL190457 [C.CVG1 19.000] [1]]-[ANGL156661 [DARL G1 22.000] [1
TIME (SECONDS)
SUN, FEB 01 2009 14:28
"NE,NY,NB ANGLE"

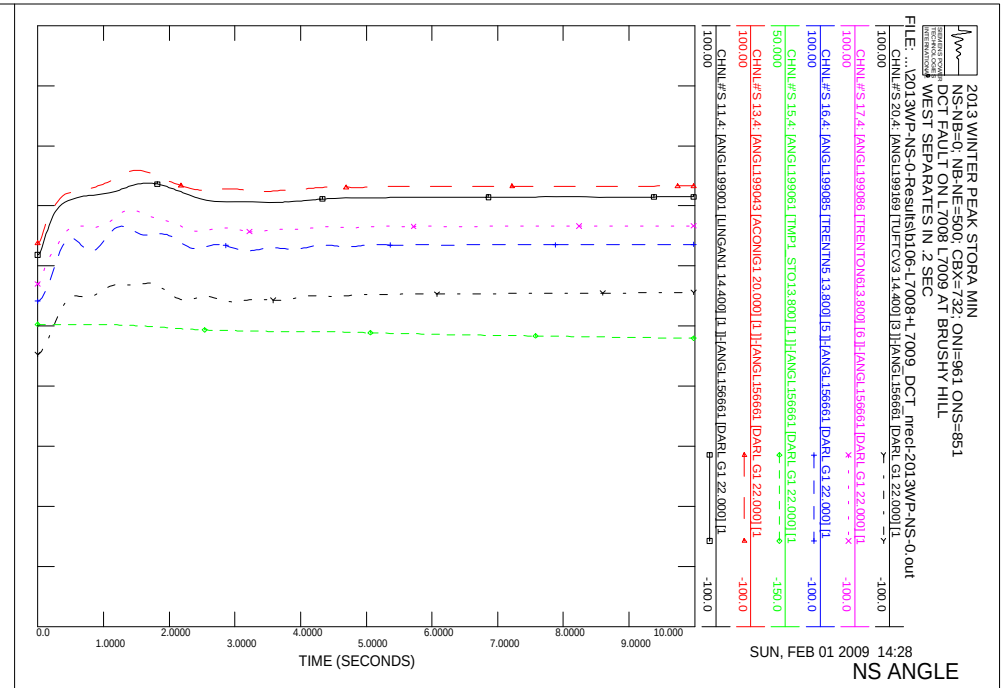
2013 WINTER PEAK STORA MIN
NS-NB=0; NB-NE=500; CBX=732; ONI=961 ONS=851
DCT FAULT ON L7008 L7009 AT BRUSHY HILL
WEST SEPARATES IN .2 SEC
FILE: ...\2013WP-NS-0-Results\b106-L7008+L7009_DCT_nrecl-2013WP-NS-0.out
CHNL#S 20,4: [ANGL199169 [TUFTCV3 14.400] [3]]-[ANGL156661 [DARL G1 22.000] [1
CHNL#S 17,4: [ANGL199086 [TRENTON613.800] [6]]-[ANGL156661 [DARL G1 22.000] [1
CHNL#S 16,4: [ANGL199085 [TRENTN5 13.800] [5]]-[ANGL156661 [DARL G1 22.000] [1
CHNL#S 15,4: [ANGL199061 [TMP1 STO13.800] [1]]-[ANGL156661 [DARL G1 22.000] [1
CHNL#S 13,4: [ANGL199043 [ACONIG1 20.000] [1]]-[ANGL156661 [DARL G1 22.000] [1
CHNL#S 11,4: [ANGL199001 [LINGAN1 14.400] [1]]-[ANGL156661 [DARL G1 22.000] [1
TIME (SECONDS)
SUN, FEB 01 2009 14:28
NS ANGLE

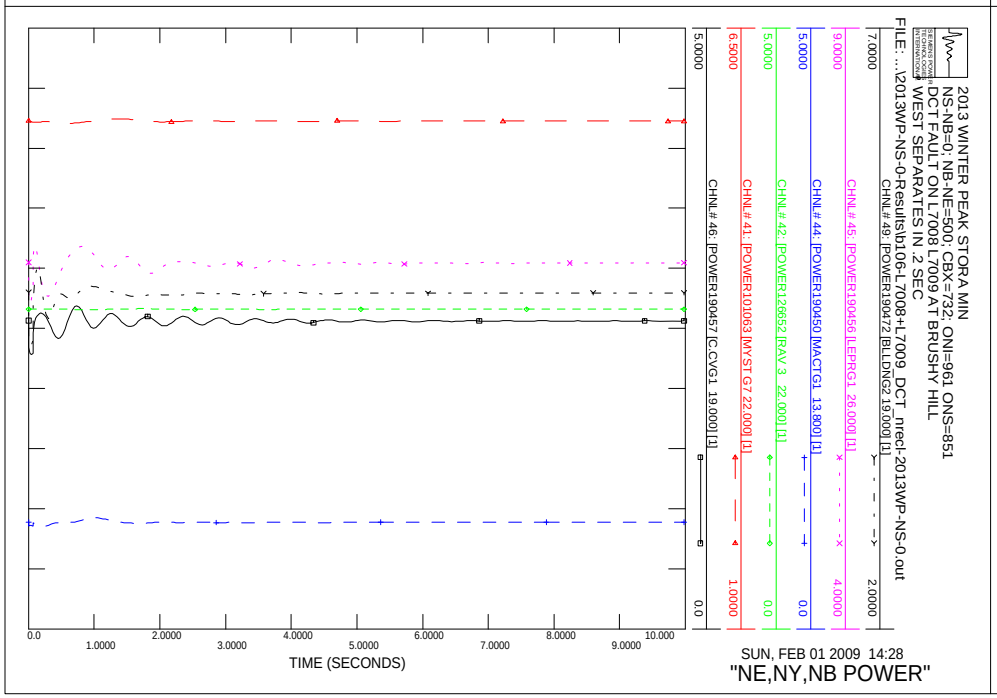
2013 WINTER PEAK STORA MIN
NS-NB=0; NB-NE=500; CBX=732; ONI=961 ONS=851
DCT FAULT ON L7008 L7009 AT BRUSHY HILL
WEST SEPARATES IN .2 SEC
FILE: ...\2013WP-NS-0-Results\b106-L7008+L7009_DCT_nrecl-2013WP-NS-0.out
CHNL# 49: [POWER190472 [BLLDNG2 19.000] [1]]
CHNL# 45: [POWER190456 [LEPRG1 26.000] [1]]
CHNL# 44: [POWER190450 [MACTG1 13.800] [1]]
CHNL# 42: [POWER126652 [RAV 3 22.000] [1]]
CHNL# 41: [POWER101063 [MYST G7 22.000] [1]]
CHNL# 46: [POWER190457 [C.CVG1 19.000] [1]]
TIME (SECONDS)
SUN, FEB 01 2009 14:28
"NE,NY,NB POWER"

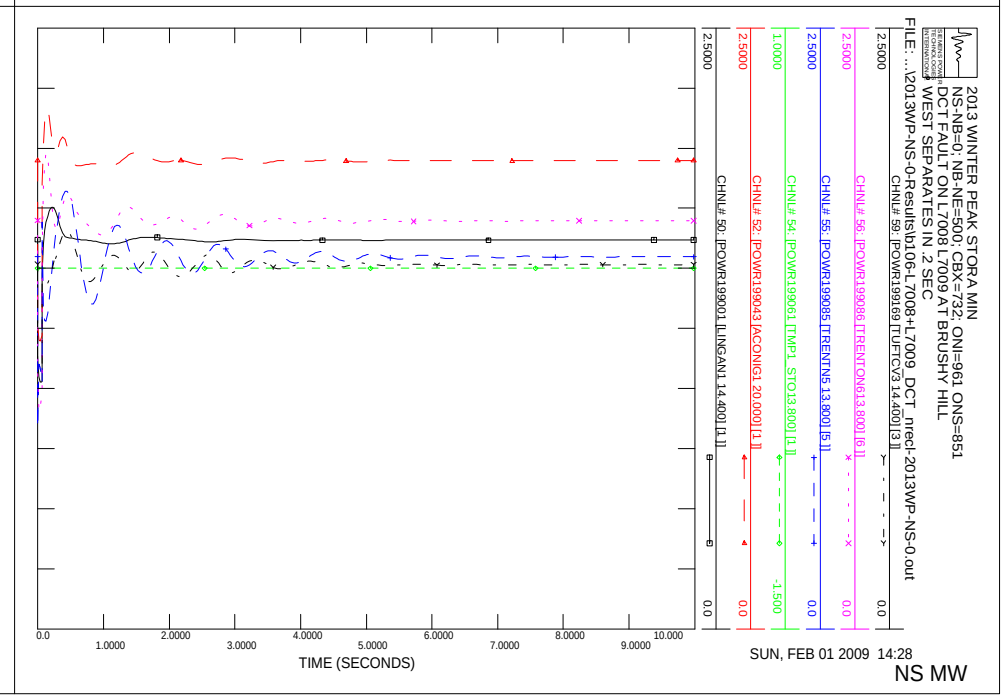
2013 WINTER PEAK STORA MIN
NS-NB=0; NB-NE=500; CBX=732; ONI=961 ONS=851
DCT FAULT ON L7008 L7009 AT BRUSHY HILL
WEST SEPARATES IN .2 SEC
FILE: ...\2013WP-NS-0-Results\b106-L7008+L7009_DCT_nrecl-2013WP-NS-0.out
CHNL# 59: [POWR199169 [TUFTCV3 14.400] [3]]
CHNL# 56: [POWR199086 [TRENTON613.800] [6]]
CHNL# 55: [POWR199085 [TRENTN5 13.800] [5]]
CHNL# 54: [POWR199061 [TMP1 STO13.800] [1]]
CHNL# 52: [POWR199043 [ACONIG1 20.000] [1]]
CHNL# 50: [POWR199001 [LINGAN1 14.400] [1]]
TIME (SECONDS)
SUN, FEB 01 2009 14:28
NS MW

NS WIND MV

NS WIND MW

"345KV VOLTAGE"

FREQUENCY HZ

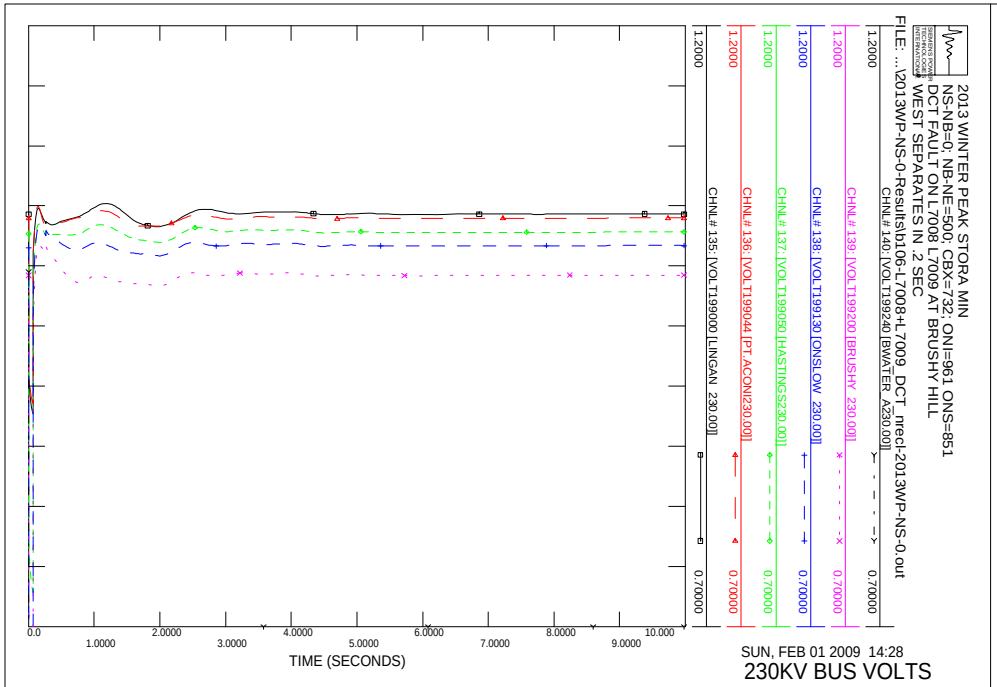
2013 WINTER PEAK STORA MIN
NS-NB=0; NB-NE=500; CBX=732; ONI=961 ONS=851
DCT FAULT ON L7008 L7009 AT BRUSHY HILL
WEST SEPARATES IN .2 SEC
FILE: ...\2013WP-NS-0-Results\b106-L7008+L7009_DCT_nrecl-2013WP-NS-0.out
CHNL# 140: [VOLT199240 [BWATER_A230.00]]
CHNL# 139: [VOLT199200 [BRUSHY_230.00]]
CHNL# 138: [VOLT199130 [ONSLOW_230.00]]
CHNL# 137: [VOLT199050 [HASTINGS230.00]]
CHNL# 136: [VOLT199044 [PT.ACONI230.00]]
CHNL# 135: [VOLT199000 [LINGAN_230.00]]
1.2000
0.70000
TIME (SECONDS)
SUN, FEB 01 2009 14:28
230KV BUS VOLTS

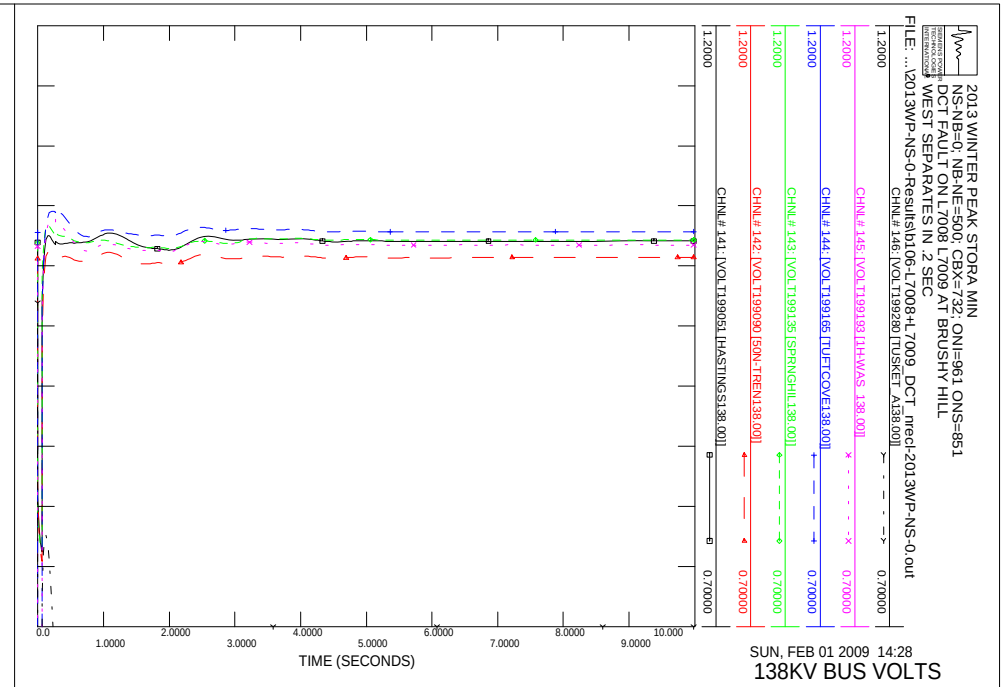
2013 WINTER PEAK STORA MIN
NS-NB=0; NB-NE=500; CBX=732; ONI=961 ONS=851
DCT FAULT ON L7008 L7009 AT BRUSHY HILL
WEST SEPARATES IN .2 SEC
FILE: ...\2013WP-NS-0-Results\b106-L7008+L7009_DCT_nrecl-2013WP-NS-0.out
CHNL# 146: [VOLT199280 [TUSKET_A138.00]]
CHNL# 145: [VOLT199193 [1H-WAS_138.00]]
CHNL# 144: [VOLT199165 [TUFTCOVE138.00]]
CHNL# 143: [VOLT199135 [SPRNGHIL138.00]]
CHNL# 142: [VOLT199090 [50N-TREN138.00]]
CHNL# 141: [VOLT199051 [HASTINGS138.00]]
1.2000
0.70000
TIME (SECONDS)
SUN, FEB 01 2009 14:28
138KV BUS VOLTS

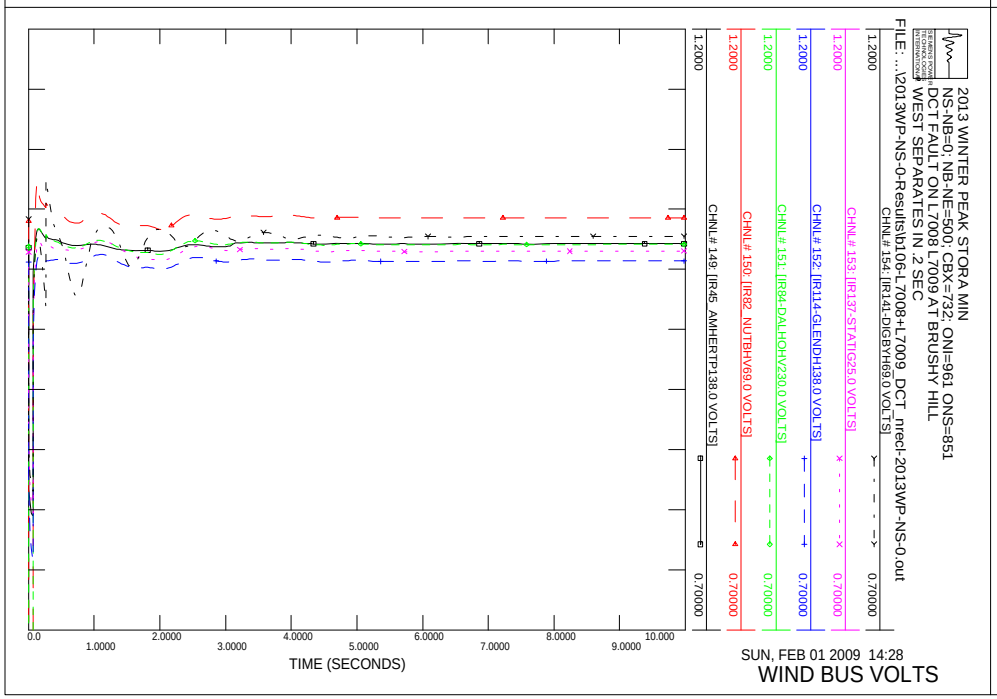
2013 WINTER PEAK STORA MIN
NS-NB=0; NB-NE=500; CBX=732; ONI=961 ONS=851
DCT FAULT ON L7008 L7009 AT BRUSHY HILL
WEST SEPARATES IN .2 SEC
FILE: ...\2013WP-NS-0-Results\b106-L7008+L7009_DCT_nrecl-2013WP-NS-0.out
CHNL# 154: [IR141-DIGBYH69.0 VOLTS]
CHNL# 153: [IR137-STATIG25.0 VOLTS]
CHNL# 152: [IR114-GLENDH138.0 VOLTS]
CHNL# 151: [IR84-DALHOHV230.0 VOLTS]
CHNL# 150: [IR82_NUTBHV69.0 VOLTS]
CHNL# 149: [IR45_AMHERTP138.0 VOLTS]
1.2000
0.70000
TIME (SECONDS)
SUN, FEB 01 2009 14:28
WIND BUS VOLTS

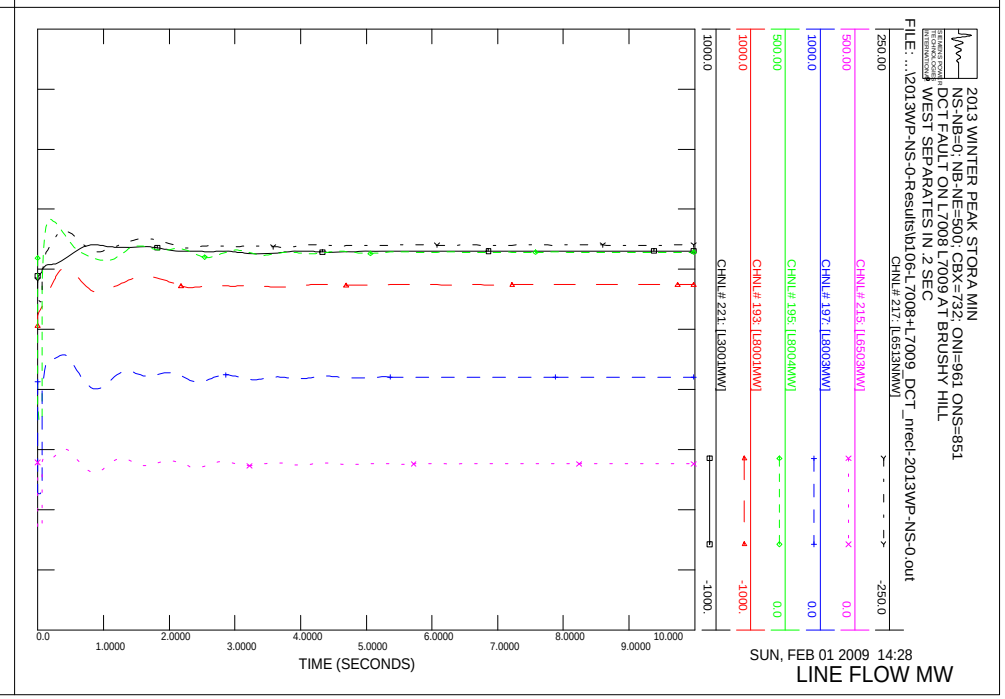
2013 WINTER PEAK STORA MIN
NS-NB=0; NB-NE=500; CBX=732; ONI=961 ONS=851
DCT FAULT ON L7008 L7009 AT BRUSHY HILL
WEST SEPARATES IN .2 SEC
FILE: ...\2013WP-NS-0-Results\b106-L7008+L7009_DCT_nrecl-2013WP-NS-0.out
CHNL# 217: [L6513NMW]
CHNL# 215: [L6503MW]
CHNL# 197: [L8003MW]
CHNL# 195: [L8004MW]
CHNL# 193: [L8001MW]
CHNL# 221: [L3001MW]
250.00
-250.0
1000.0
0.0
500.00
-1000.
TIME (SECONDS)
SUN, FEB 01 2009 14:28
LINE FLOW MW

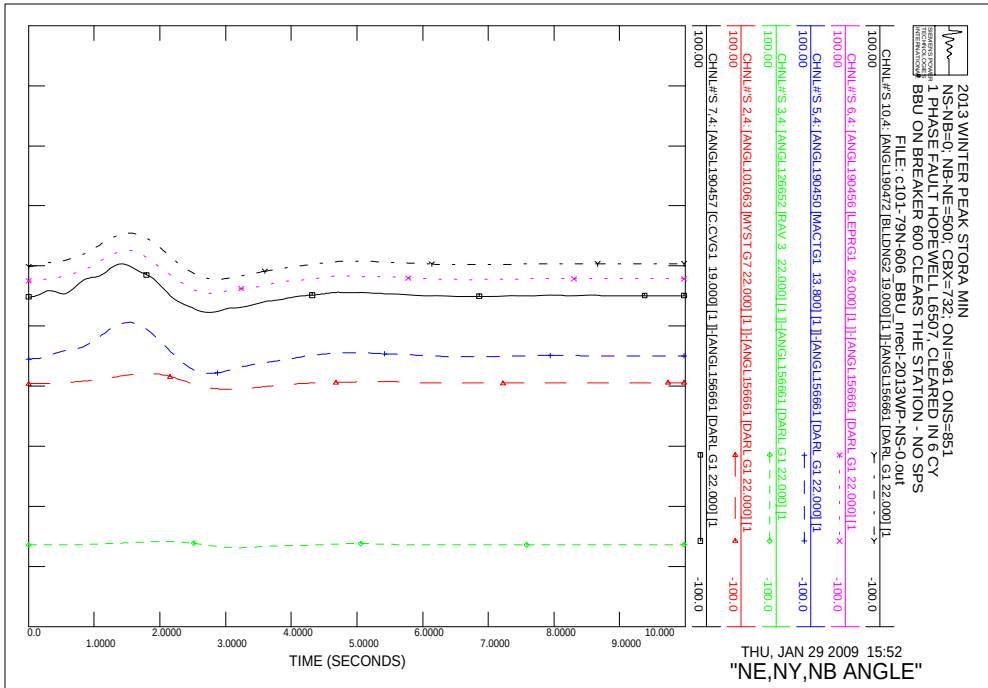
2013 WINTER PEAK STORA MIN
NS-NB=0; NB-NE=500; CBX=732; ONI=961 ONS=851
1 PHASE FAULT HOPEWELL L6507, CLEARED IN 6 CY
BBU ON BREAKER 600 CLEARS THE STATION - NO SPS
FILE: c101-79N-606_BBU_nrecl-2013WP-NS-0.out
CHNL#'S 10,4: [ANGL190472 [BLLDNG2 19.000] [1]]-[ANGL156661 [DARL G1 22.000] [1
CHNL#'S 6,4: [ANGL190456 [LEPRG1 26.000] [1]]-[ANGL156661 [DARL G1 22.000] [1
CHNL#'S 5,4: [ANGL190450 [MACTG1 13.800] [1]]-[ANGL156661 [DARL G1 22.000] [1
CHNL#'S 3,4: [ANGL126652 [RAV 3 22.000] [1]]-[ANGL156661 [DARL G1 22.000] [1
CHNL#'S 2,4: [ANGL101063 [MYST G7 22.000] [1]]-[ANGL156661 [DARL G1 22.000] [1
CHNL#'S 7,4: [ANGL190457 [C.CVG1 19.000] [1]]-[ANGL156661 [DARL G1 22.000] [1
TIME (SECONDS)
THU, JAN 29 2009 15:52
"NE,NY,NB ANGLE"

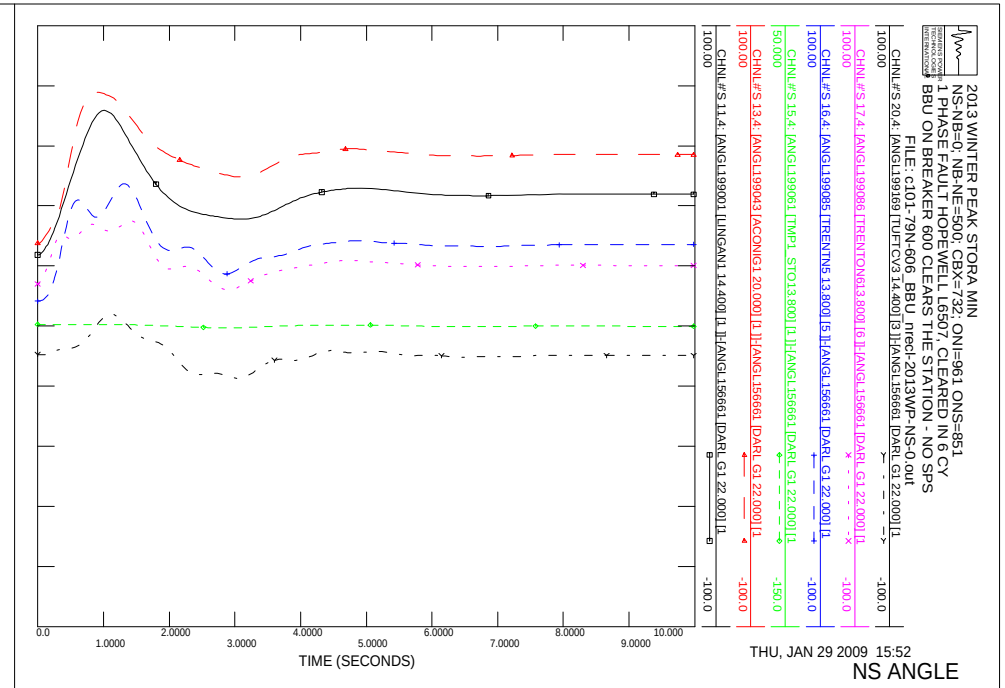
2013 WINTER PEAK STORA MIN
NS-NB=0; NB-NE=500; CBX=732; ONI=961 ONS=851
1 PHASE FAULT HOPEWELL L6507, CLEARED IN 6 CY
BBU ON BREAKER 600 CLEARS THE STATION - NO SPS
FILE: c101-79N-606_BBU_nrecl-2013WP-NS-0.out
CHNL#'S 20,4: [ANGL199169 [TUFTCV3 14.400] [3]]-[ANGL156661 [DARL G1 22.000] [1
CHNL#'S 17,4: [ANGL199086 [TRENTON613.800] [6]]-[ANGL156661 [DARL G1 22.000] [1
CHNL#'S 16,4: [ANGL199085 [TRENTN5 13.800] [5]]-[ANGL156661 [DARL G1 22.000] [1
CHNL#'S 15,4: [ANGL199061 [TMP1 STO13.800] [1]]-[ANGL156661 [DARL G1 22.000] [1
CHNL#'S 13,4: [ANGL199043 [ACONIG1 20.000] [1]]-[ANGL156661 [DARL G1 22.000] [1
CHNL#'S 11,4: [ANGL199001 [LINGAN1 14.400] [1]]-[ANGL156661 [DARL G1 22.000] [1
TIME (SECONDS)
THU, JAN 29 2009 15:52
NS ANGLE

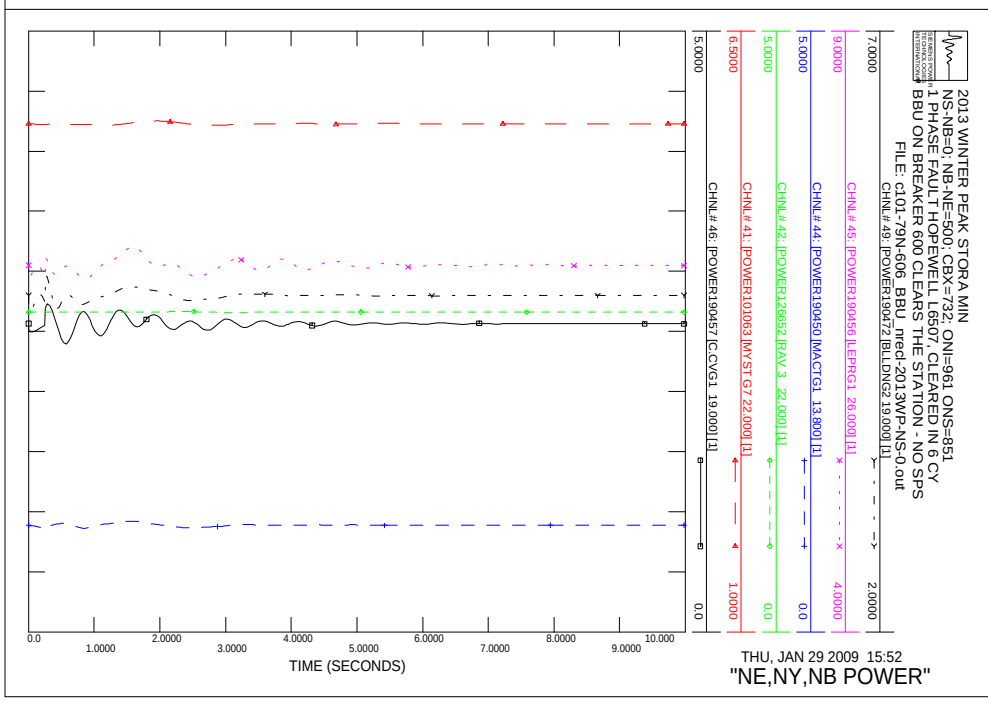
2013 WINTER PEAK STORA MIN
NS-NB=0; NB-NE=500; CBX=732; ONI=961 ONS=851
1 PHASE FAULT HOPEWELL L6507, CLEARED IN 6 CY
BBU ON BREAKER 600 CLEARS THE STATION - NO SPS
FILE: c101-79N-606_BBU_nrecl-2013WP-NS-0.out
CHNL# 49: [POWER190472 [BLLDNG2 19.000] [1]
CHNL# 45: [POWER190456 [LEPRG1 26.000] [1]
CHNL# 44: [POWER190450 [MACTG1 13.800] [1]
CHNL# 42: [POWER126652 [RAV 3 22.000] [1]
CHNL# 41: [POWER101063 [MYST G7 22.000] [1]
CHNL# 46: [POWER190457 [C.CVG1 19.000] [1]
TIME (SECONDS)
THU, JAN 29 2009 15:52
"NE,NY,NB POWER"

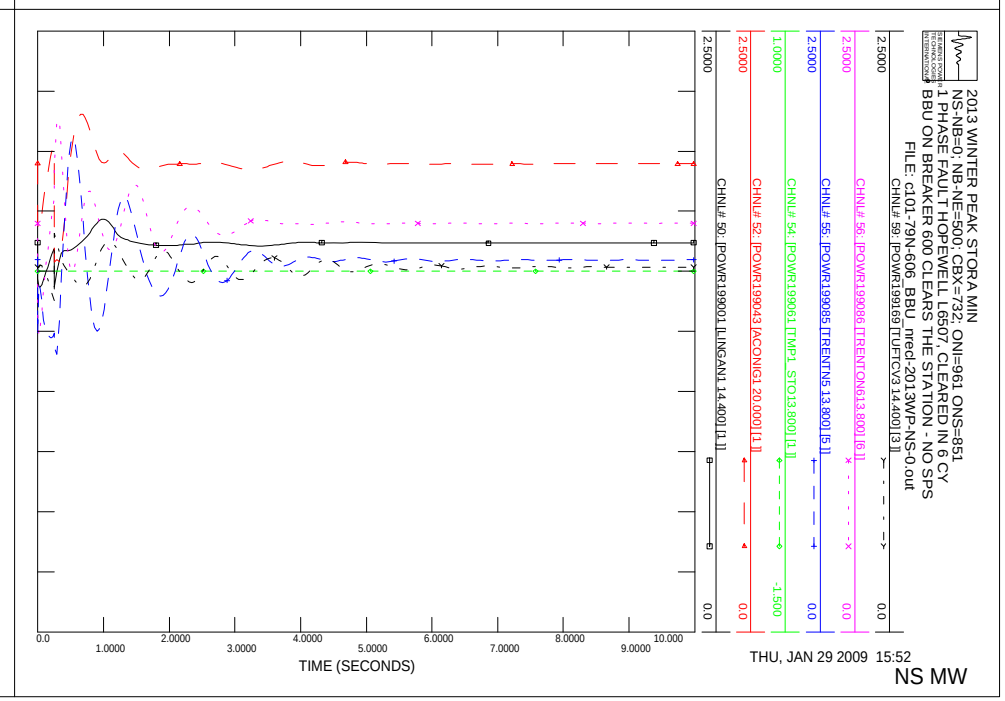
2013 WINTER PEAK STORA MIN
NS-NB=0; NB-NE=500; CBX=732; ONI=961 ONS=851
1 PHASE FAULT HOPEWELL L6507, CLEARED IN 6 CY
BBU ON BREAKER 600 CLEARS THE STATION - NO SPS
FILE: c101-79N-606_BBU_nrecl-2013WP-NS-0.out
CHNL# 59: [POWR199169 [TUFTCV3 14.400] [3]]
CHNL# 56: [POWR199086 [TRENTON613.800] [6]]
CHNL# 55: [POWR199085 [TRENTN5 13.800] [5]]
CHNL# 54: [POWR199061 [TMP1 STO13.800] [1]]
CHNL# 52: [POWR199043 [ACONIG1 20.000] [1]]
CHNL# 50: [POWR199001 [LINGAN1 14.400] [1]]
TIME (SECONDS)
THU, JAN 29 2009 15:52
NS MW

2013 WINTER PEAK STORA MIN
NS-NB=0; NB-NE=500; CBX=732; ONI=961 ONS=851
1 PHASE FAULT HOPEWELL L6507, CLEARED IN 6 CY
BBU ON BREAKER 600 CLEARS THE STATION - NO SPS
FILE: c101-79N-606_BBU_nrecl-2013WP-NS-0.out
CHNL# 119: [VARS IR141-DIGBY]
CHNL# 118: [VARS IR137-STATIA]
CHNL# 117: [VARS IR114-GLENDHU]
CHNL# 116: [VARS IR84-DALHOUSIE]
CHNL# 115: [VARS IR82_NUTTBY]
CHNL# 114: [VARS IR45_AMHERST]
0.50000
-0.5000
0.0
1.0000
2.0000
3.0000
4.0000
5.0000
6.0000
7.0000
8.0000
9.0000
10.000
TIME (SECONDS)
THU, JAN 29 2009 15:52
NS WIND MV

2013 WINTER PEAK STORA MIN
NS-NB=0; NB-NE=500; CBX=732; ONI=961 ONS=851
1 PHASE FAULT HOPEWELL L6507, CLEARED IN 6 CY
BBU ON BREAKER 600 CLEARS THE STATION - NO SPS
FILE: c101-79N-606_BBU_nrecl-2013WP-NS-0.out
CHNL# 79: [POWER IR141-DIGBY]
CHNL# 78: [POWER IR137-STATIA]
CHNL# 77: [POWER IR114-GLENDHU]
CHNL# 76: [POWER IR84-DALHOUSIE]
CHNL# 75: [POWER IR82_NUTTBY]
CHNL# 74: [POWER IR45_AMHERST]
1.0000
0.0
0.0
1.0000
2.0000
3.0000
4.0000
5.0000
6.0000
7.0000
8.0000
9.0000
10.000
TIME (SECONDS)
THU, JAN 29 2009 15:52
NS WIND MW

2013 WINTER PEAK STORA MIN
NS-NB=0; NB-NE=500; CBX=732; ONI=961 ONS=851
1 PHASE FAULT HOPEWELL L6507, CLEARED IN 6 CY
BBU ON BREAKER 600 CLEARS THE STATION - NO SPS
FILE: c101-79N-606_BBU_nrecl-2013WP-NS-0.out
CHNL# 133: [VOLT199125 [ONSLOW 345.00]]
CHNL# 132: [VOLT199120 [HOPEWELL 345.00]]
CHNL# 131: [VOLT199045 [WOODBINE345.00]]
CHNL# 130: [VOLT190320 [SALBRY 345.00]]
CHNL# 128: [VOLT190004 [KESWICK 345.00]]
CHNL# 127: [VOLT 70002 [ORRINGTN345.00]]
1.1000
0.90000
0.0
1.0000
2.0000
3.0000
4.0000
5.0000
6.0000
7.0000
8.0000
9.0000
10.000
TIME (SECONDS)
THU, JAN 29 2009 15:52
"345KV VOLTAGE"

2013 WINTER PEAK STORA MIN
NS-NB=0; NB-NE=500; CBX=732; ONI=961 ONS=851
1 PHASE FAULT HOPEWELL L6507, CLEARED IN 6 CY
BBU ON BREAKER 600 CLEARS THE STATION - NO SPS
FILE: c101-79N-606_BBU_nrecl-2013WP-NS-0.out
CHNL# 125: 60*(1+[FREQ199125 [ONSLOW 345.00]])
CHNL# 124: 60*(1+[FREQ199120 [HOPEWELL 345.00]])
CHNL# 123: 60*(1+[FREQ199045 [WOODBINE345.00]])
CHNL# 122: 60*(1+[FREQ190320 [SALBRY 345.00]])
CHNL# 121: 60*(1+[FREQ190197 [C.COVE 345.00]])
CHNL# 120: 60*(1+[FREQ 70002 [ORRINGTN345.00]])
60.500
59.500
0.0
1.0000
2.0000
3.0000
4.0000
5.0000
6.0000
7.0000
8.0000
9.0000
10.000
TIME (SECONDS)
THU, JAN 29 2009 15:52
FREQUENCY HZ

2013 WINTER PEAK STORA MIN
NS-NB=0; NB-NE=500; CBX=732; ONI=961 ONS=851
1 PHASE FAULT HOPEWELL L6507, CLEARED IN 6 CY
BBU ON BREAKER 600 CLEARS THE STATION - NO SPS
FILE: c101-79N-606_BBU_nrecl-2013WP-NS-0.out
CHNL# 146: [VOLT199280 [TUSKET A138.00]]
CHNL# 145: [VOLT199193 [HHWAS 138.00]]
CHNL# 144: [VOLT199165 [TUFTCOVE138.00]]
CHNL# 143: [VOLT199135 [SPRNGHIL138.00]]
CHNL# 142: [VOLT199090 [50N-TREN138.00]]
CHNL# 141: [VOLT199051 [HASTINGS138.00]]
1.2000
0.70000
0.0
1.0000
2.0000
3.0000
4.0000
5.0000
6.0000
7.0000
8.0000
9.0000
10.000
TIME (SECONDS)
THU, JAN 29 2009 15:52
138KV BUS VOLTS

2013 WINTER PEAK STORA MIN
NS-NB=0; NB-NE=500; CBX=732; ONI=961 ONS=851
1 PHASE FAULT HOPEWELL L6507, CLEARED IN 6 CY
BBU ON BREAKER 600 CLEARS THE STATION - NO SPS
FILE: c101-79N-606_BBU_nrecl-2013WP-NS-0.out
CHNL# 140: [VOLT199240 [BWATER A230.00]]
CHNL# 139: [VOLT199200 [BRUSHY 230.00]]
CHNL# 138: [VOLT199130 [ONSLOW 230.00]]
CHNL# 137: [VOLT199050 [HASTINGS230.00]]
CHNL# 136: [VOLT199044 [PT.ACONI230.00]]
CHNL# 135: [VOLT199000 [LINGAN 230.00]]
1.2000
0.70000
0.0
1.0000
2.0000
3.0000
4.0000
5.0000
6.0000
7.0000
8.0000
9.0000
10.000
TIME (SECONDS)
THU, JAN 29 2009 15:52
230KV BUS VOLTS

2013 WINTER PEAK STORA MIN
NS-NB=0; NB-NE=500; CBX=732; ONI=961 ONS=851
1 PHASE FAULT HOPEWELL L6507, CLEARED IN 6 CY
BBU ON BREAKER 600 CLEARS THE STATION - NO SPS
FILE: c101-79N-606_BBU_nrecl-2013WP-NS-0.out
CHNL# 217: [L6533MW]
CHNL# 215: [L6503MW]
CHNL# 197: [L8003MW]
CHNL# 195: [L8004MW]
CHNL# 193: [L8001MW]
CHNL# 221: [L3001MW]
250.00
500.00
1000.0
0.0
-250.0
-1000.
0.0
1.0000
2.0000
3.0000
4.0000
5.0000
6.0000
7.0000
8.0000
9.0000
10.000
TIME (SECONDS)
THU, JAN 29 2009 15:52
LINE FLOW MW

2013 WINTER PEAK STORA MIN
NS-NB=0; NB-NE=500; CBX=732; ONI=961 ONS=851
1 PHASE FAULT HOPEWELL L6507, CLEARED IN 6 CY
BBU ON BREAKER 600 CLEARS THE STATION - NO SPS
FILE: c101-79N-606_BBU_nrecl-2013WP-NS-0.out
CHNL# 154: [IR141-DIGBYH69.0 VOLTS]
CHNL# 153: [IR137-STATIG25.0 VOLTS]
CHNL# 152: [IR114-GLENDH138.0 VOLTS]
CHNL# 151: [IR84-DALHOHV230.0 VOLTS]
CHNL# 150: [IR82 NUTBHV69.0 VOLTS]
CHNL# 149: [IR45 AMHERTP138.0 VOLTS]
1.2000
0.70000
0.0
1.0000
2.0000
3.0000
4.0000
5.0000
6.0000
7.0000
8.0000
9.0000
10.000
TIME (SECONDS)
THU, JAN 29 2009 15:52
WIND BUS VOLTS

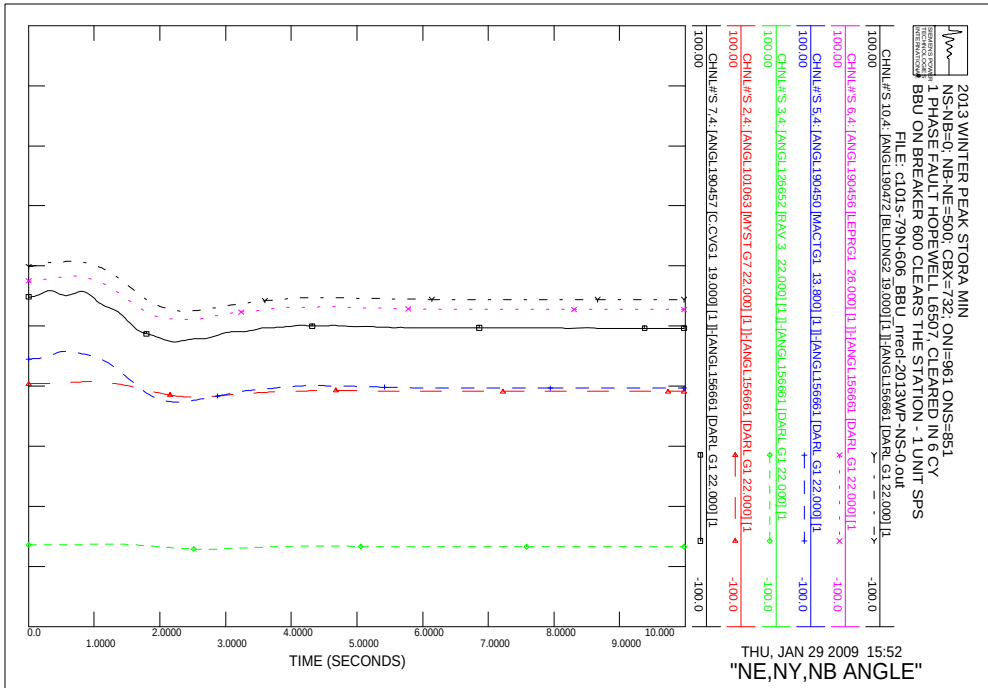
2013 WINTER PEAK STORA MIN
NS-NB=0; NB-NE=500; CBX=732; ONI=961 ONS=851
1 PHASE FAULT HOPEWELL L6507, CLEARED IN 6 CY
BBU ON BREAKER 600 CLEARS THE STATION - 1 UNIT SPS
FILE: c101s-79N-606_BBU_nrecl-2013WP-NS-0.out
CHNL#'S 10,4: [ANGL190472 [BLLDNG2 19.000] [1]]-[ANGL156661 [DARL G1 22.000] [1
CHNL#'S 6,4: [ANGL190456 [LEPRG1 26.000] [1]]-[ANGL156661 [DARL G1 22.000] [1
CHNL#'S 5,4: [ANGL190450 [MACTG1 13.800] [1]]-[ANGL156661 [DARL G1 22.000] [1
CHNL#'S 3,4: [ANGL126652 [RAV 3 22.000] [1]]-[ANGL156661 [DARL G1 22.000] [1
CHNL#'S 2,4: [ANGL101063 [MYST G7 22.000] [1]]-[ANGL156661 [DARL G1 22.000] [1
CHNL#'S 7,4: [ANGL190457 [C.CVG1 19.000] [1]]-[ANGL156661 [DARL G1 22.000] [1
100.00
-100.0
TIME (SECONDS)
THU, JAN 29 2009 15:52
"NE,NY,NB ANGLE"

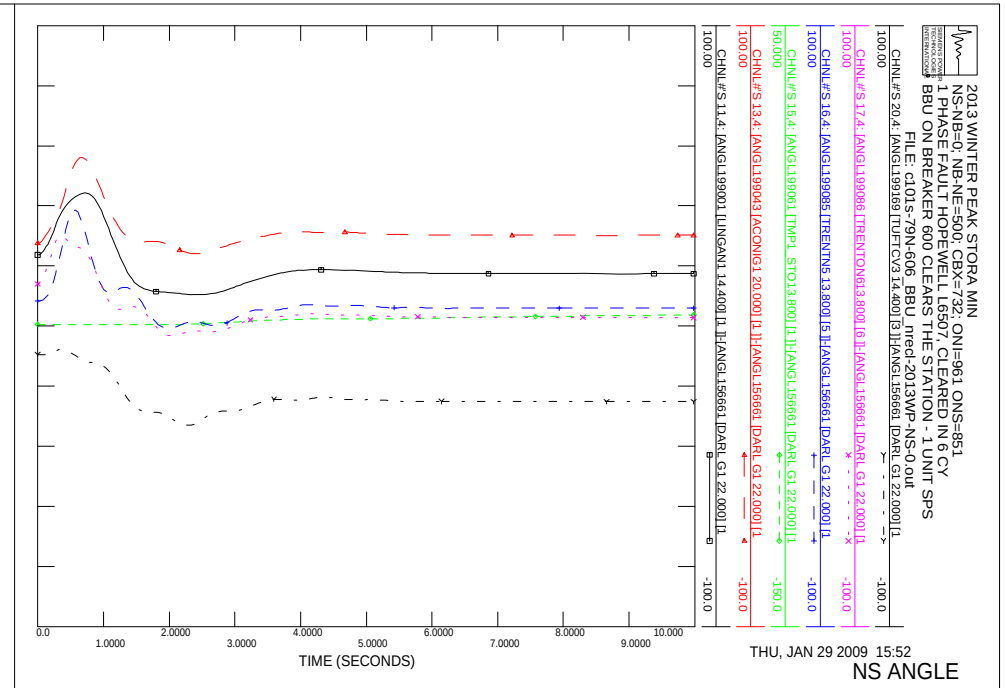
2013 WINTER PEAK STORA MIN
NS-NB=0; NB-NE=500; CBX=732; ONI=961 ONS=851
1 PHASE FAULT HOPEWELL L6507, CLEARED IN 6 CY
BBU ON BREAKER 600 CLEARS THE STATION - 1 UNIT SPS
FILE: c101s-79N-606_BBU_nrecl-2013WP-NS-0.out
CHNL#'S 20,4: [ANGL199169 [TUFTCV3 14.400] [3]]-[ANGL156661 [DARL G1 22.000] [1
CHNL#'S 17,4: [ANGL199086 [TRENTON613.800] [6]]-[ANGL156661 [DARL G1 22.000] [1
CHNL#'S 16,4: [ANGL199085 [TRENTN5 13.800] [5]]-[ANGL156661 [DARL G1 22.000] [1
CHNL#'S 15,4: [ANGL199061 [TMP1 STO13.800] [1]]-[ANGL156661 [DARL G1 22.000] [1
CHNL#'S 13,4: [ANGL199043 [ACONIG1 20.000] [1]]-[ANGL156661 [DARL G1 22.000] [1
CHNL#'S 11,4: [ANGL199001 [LINGAN1 14.400] [1]]-[ANGL156661 [DARL G1 22.000] [1
100.00
-100.0
TIME (SECONDS)
THU, JAN 29 2009 15:52
NS ANGLE

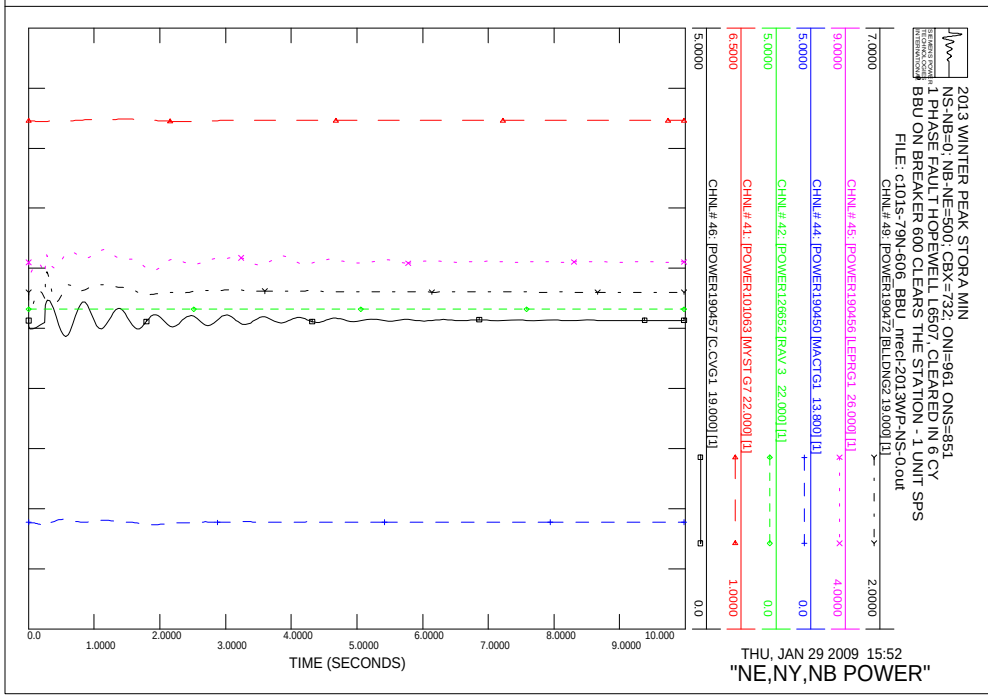
2013 WINTER PEAK STORA MIN
NS-NB=0; NB-NE=500; CBX=732; ONI=961 ONS=851
1 PHASE FAULT HOPEWELL L6507, CLEARED IN 6 CY
BBU ON BREAKER 600 CLEARS THE STATION - 1 UNIT SPS
FILE: c101s-79N-606_BBU_nrecl-2013WP-NS-0.out
CHNL# 49: [POWER190472 [BLLDNG2 19.000] [1]
CHNL# 45: [POWER190456 [LEPRG1 26.000] [1]
CHNL# 44: [POWER190450 [MACTG1 13.800] [1]
CHNL# 42: [POWER126652 [RAV 3 22.000] [1]
CHNL# 41: [POWER101063 [MYST G7 22.000] [1]
CHNL# 46: [POWER190457 [C.CVG1 19.000] [1]
7.0000
2.0000
9.0000
4.0000
5.0000
0.0
6.5000
1.0000
5.0000
0.0
TIME (SECONDS)
THU, JAN 29 2009 15:52
"NE,NY,NB POWER"

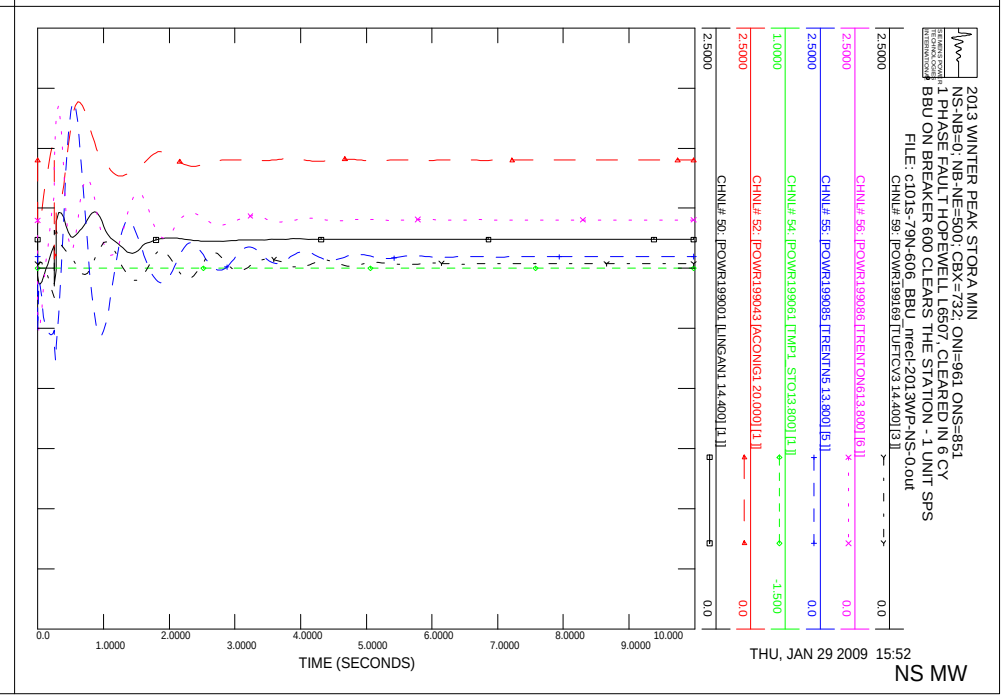
2013 WINTER PEAK STORA MIN
NS-NB=0; NB-NE=500; CBX=732; ONI=961 ONS=851
1 PHASE FAULT HOPEWELL L6507, CLEARED IN 6 CY
BBU ON BREAKER 600 CLEARS THE STATION - 1 UNIT SPS
FILE: c101s-79N-606_BBU_nrecl-2013WP-NS-0.out
CHNL# 59: [POWR199169 [TUFTCV3 14.400] [3]]
CHNL# 56: [POWR199086 [TRENTON613.800] [6]]
CHNL# 55: [POWR199085 [TRENTN5 13.800] [5]]
CHNL# 54: [POWR199061 [TMP1 STO13.800] [1]]
CHNL# 52: [POWR199043 [ACONIG1 20.000] [1]]
CHNL# 50: [POWR199001 [LINGAN1 14.400] [1]]
2.5000
0.0
1.0000
-1.500
TIME (SECONDS)
THU, JAN 29 2009 15:52
NS MW

2013 WINTER PEAK STORA MIN
NS-NB=0; NB-NE=500; CBX=732; ONI=961 ONS=851
1 PHASE FAULT HOPEWELL L6507, CLEARED IN 6 CY
BBU ON BREAKER 600 CLEARS THE STATION - 1 UNIT SPS
FILE: c101s-79N-606_BBU_mecl-2013WP-NS-0.out
CHNL# 119: [VARS IR141-DIGBY]
CHNL# 118: [VARS IR137-STATIA]
CHNL# 117: [VARS IR114-GLENDHU]
CHNL# 116: [VARS IR84-DALHOUSIE]
CHNL# 115: [VARS IR82_NUTTBY]
CHNL# 114: [VARS IR45_AMHERST]
0.50000
-0.5000
TIME (SECONDS)
THU, JAN 29 2009 15:52
NS WIND MV

2013 WINTER PEAK STORA MIN
NS-NB=0; NB-NE=500; CBX=732; ONI=961 ONS=851
1 PHASE FAULT HOPEWELL L6507, CLEARED IN 6 CY
BBU ON BREAKER 600 CLEARS THE STATION - 1 UNIT SPS
FILE: c101s-79N-606_BBU_mecl-2013WP-NS-0.out
CHNL# 79: [POWER IR141-DIGBY]
CHNL# 78: [POWER IR137-STATIA]
CHNL# 77: [POWER IR114-GLENDHU]
CHNL# 76: [POWER IR84-DALHOUSIE]
CHNL# 75: [POWER IR82_NUTTBY]
CHNL# 74: [POWER IR45_AMHERST]
1.0000
0.0
TIME (SECONDS)
THU, JAN 29 2009 15:52
NS WIND MW

2013 WINTER PEAK STORA MIN
NS-NB=0; NB-NE=500; CBX=732; ONI=961 ONS=851
1 PHASE FAULT HOPEWELL L6507, CLEARED IN 6 CY
BBU ON BREAKER 600 CLEARS THE STATION - 1 UNIT SPS
FILE: c101s-79N-606_BBU_mecl-2013WP-NS-0.out
CHNL# 133: [VOLT199125 IONSLOW 345.00]
CHNL# 132: [VOLT199120 IHOPEWELL345.00]
CHNL# 131: [VOLT199045 IWOODBINE345.00]
CHNL# 130: [VOLT190320 ISALBRY 345.00]
CHNL# 128: [VOLT190004 IKESWICK 345.00]
CHNL# 127: [VOLT 70002 IORRINGTN345.00]
1.1000
0.90000
TIME (SECONDS)
THU, JAN 29 2009 15:52
"345KV VOLTAGE"

2013 WINTER PEAK STORA MIN
NS-NB=0; NB-NE=500; CBX=732; ONI=961 ONS=851
1 PHASE FAULT HOPEWELL L6507, CLEARED IN 6 CY
BBU ON BREAKER 600 CLEARS THE STATION - 1 UNIT SPS
FILE: c101s-79N-606_BBU_mecl-2013WP-NS-0.out
CHNL# 125: [60*(1+[FREQ199125 IONSLOW 345.00])]
CHNL# 124: [60*(1+[FREQ199120 IHOPEWELL345.00])]
CHNL# 123: [60*(1+[FREQ199045 IWOODBINE345.00])]
CHNL# 122: [60*(1+[FREQ190320 ISALBRY 345.00])]
CHNL# 121: [60*(1+[FREQ190197 IC.COVE 345.00])]
CHNL# 120: [60*(1+[FREQ 70002 IORRINGTN345.00])]
60.500
59.500
TIME (SECONDS)
THU, JAN 29 2009 15:52
FREQUENCY HZ

2013 WINTER PEAK STORA MIN
NS-NB=0; NB-NE=500; CBX=732; ONI=961 ONS=851
1 PHASE FAULT HOPEWELL L6507, CLEARED IN 6 CY
BBU ON BREAKER 600 CLEARS THE STATION - 1 UNIT SPS
FILE: c101s-79N-606_BBU_nrecl-2013WP-NS-0.out
CHNL# 146: [VOLT199280 [TUSKET A138.00]]
CHNL# 145: [VOLT199193 [HHWAS 138.00]]
CHNL# 144: [VOLT199165 [TUFTCOVE138.00]]
CHNL# 143: [VOLT199138 [SPRNGHLL138.00]]
CHNL# 142: [VOLT199090 [SON-TREN138.00]]
CHNL# 141: [VOLT199051 [HASTINGS138.00]]
1.2000
0.70000
0.0
1.0000
2.0000
3.0000
4.0000
5.0000
6.0000
7.0000
8.0000
9.0000
10.000
TIME (SECONDS)
THU, JAN 29 2009 15:52
138KV BUS VOLTS

2013 WINTER PEAK STORA MIN
NS-NB=0; NB-NE=500; CBX=732; ONI=961 ONS=851
1 PHASE FAULT HOPEWELL L6507, CLEARED IN 6 CY
BBU ON BREAKER 600 CLEARS THE STATION - 1 UNIT SPS
FILE: c101s-79N-606_BBU_nrecl-2013WP-NS-0.out
CHNL# 140: [VOLT199240 [BWATER A230.00]]
CHNL# 139: [VOLT199200 [BRUSHY 230.00]]
CHNL# 138: [VOLT199130 [ONSLOW 230.00]]
CHNL# 137: [VOLT199050 [HASTINGS230.00]]
CHNL# 136: [VOLT199044 [PT.ACONI230.00]]
CHNL# 135: [VOLT199000 [LINGAN 230.00]]
1.2000
0.70000
0.0
1.0000
2.0000
3.0000
4.0000
5.0000
6.0000
7.0000
8.0000
9.0000
10.000
TIME (SECONDS)
THU, JAN 29 2009 15:52
230KV BUS VOLTS

2013 WINTER PEAK STORA MIN
NS-NB=0; NB-NE=500; CBX=732; ONI=961 ONS=851
1 PHASE FAULT HOPEWELL L6507, CLEARED IN 6 CY
BBU ON BREAKER 600 CLEARS THE STATION - 1 UNIT SPS
FILE: c101s-79N-606_BBU_nrecl-2013WP-NS-0.out
CHNL# 217: [L6533MW]
CHNL# 215: [L6503MW]
CHNL# 197: [L8003MW]
CHNL# 195: [L8004MW]
CHNL# 193: [L8001MW]
CHNL# 221: [L3001MW]
250.00
500.00
1000.0
0.0
-250.0
-1000.
0.0
1.0000
2.0000
3.0000
4.0000
5.0000
6.0000
7.0000
8.0000
9.0000
10.000
TIME (SECONDS)
THU, JAN 29 2009 15:52
LINE FLOW MW

2013 WINTER PEAK STORA MIN
NS-NB=0; NB-NE=500; CBX=732; ONI=961 ONS=851
1 PHASE FAULT HOPEWELL L6507, CLEARED IN 6 CY
BBU ON BREAKER 600 CLEARS THE STATION - 1 UNIT SPS
FILE: c101s-79N-606_BBU_nrecl-2013WP-NS-0.out
CHNL# 154: [IR141-DIGBYH69.0 VOLTS]
CHNL# 153: [IR137-STATIG25.0 VOLTS]
CHNL# 152: [IR114-GLENDH138.0 VOLTS]
CHNL# 151: [IR84-DALHOHV230.0 VOLTS]
CHNL# 150: [IR82_NUTBHV69.0 VOLTS]
CHNL# 149: [IR45_AMHERTP138.0 VOLTS]
1.2000
0.70000
0.0
1.0000
2.0000
3.0000
4.0000
5.0000
6.0000
7.0000
8.0000
9.0000
10.000
TIME (SECONDS)
THU, JAN 29 2009 15:52
WIND BUS VOLTS

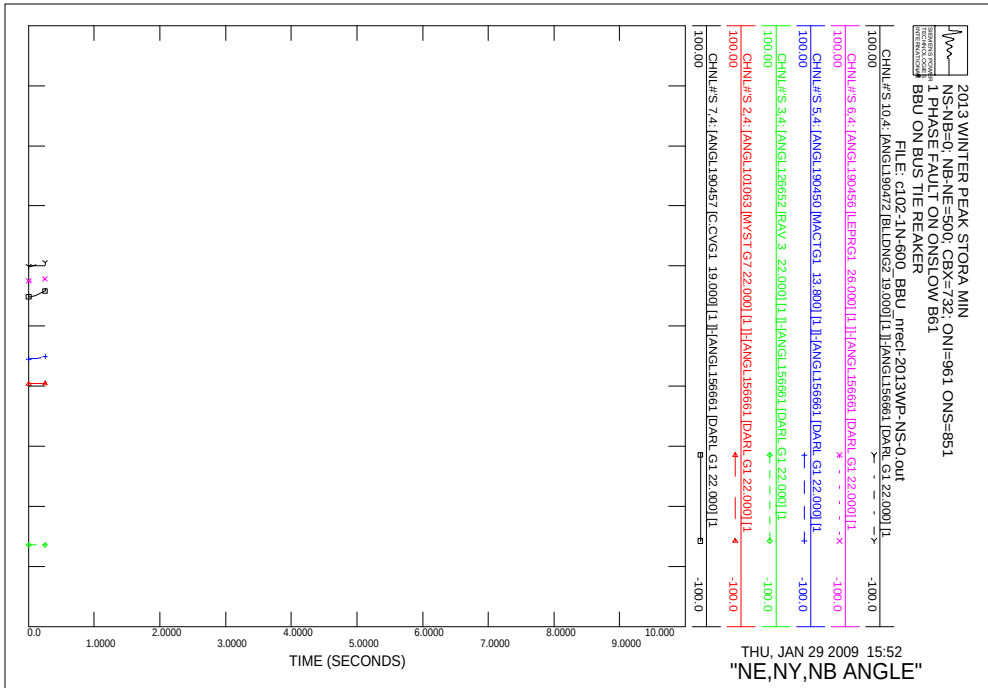
2013 WINTER PEAK STORA MIN
NS-NB=0; NB-NE=500; CBX=732; ONI=961 ONS=851
1 PHASE FAULT ON ONSLOW B61
BBU ON BUS TIE REAKER
FILE: c102-1N-600_BBU_nrecl-2013WP-NS-0.out
CHNL#S 10,4: [ANGL190472 [BLLDNG2 19.000] [1]]-[ANGL156661 [DARL G1 22.000] [1
CHNL#S 6,4: [ANGL190456 [LEPRG1 26.000] [1]]-[ANGL156661 [DARL G1 22.000] [1
CHNL#S 5,4: [ANGL190450 [MACTG1 13.800] [1]]-[ANGL156661 [DARL G1 22.000] [1
CHNL#S 3,4: [ANGL126652 [RAV 3 22.000] [1]]-[ANGL156661 [DARL G1 22.000] [1
CHNL#S 2,4: [ANGL101063 [MYST G7 22.000] [1]]-[ANGL156661 [DARL G1 22.000] [1
CHNL#S 7,4: [ANGL190457 [C.CVG1 19.000] [1]]-[ANGL156661 [DARL G1 22.000] [1
100.00
-100.0
0.0
1.0000
2.0000
3.0000
4.0000
5.0000
6.0000
7.0000
8.0000
9.0000
10.000
TIME (SECONDS)
THU, JAN 29 2009 15:52
"NE,NY,NB ANGLE"

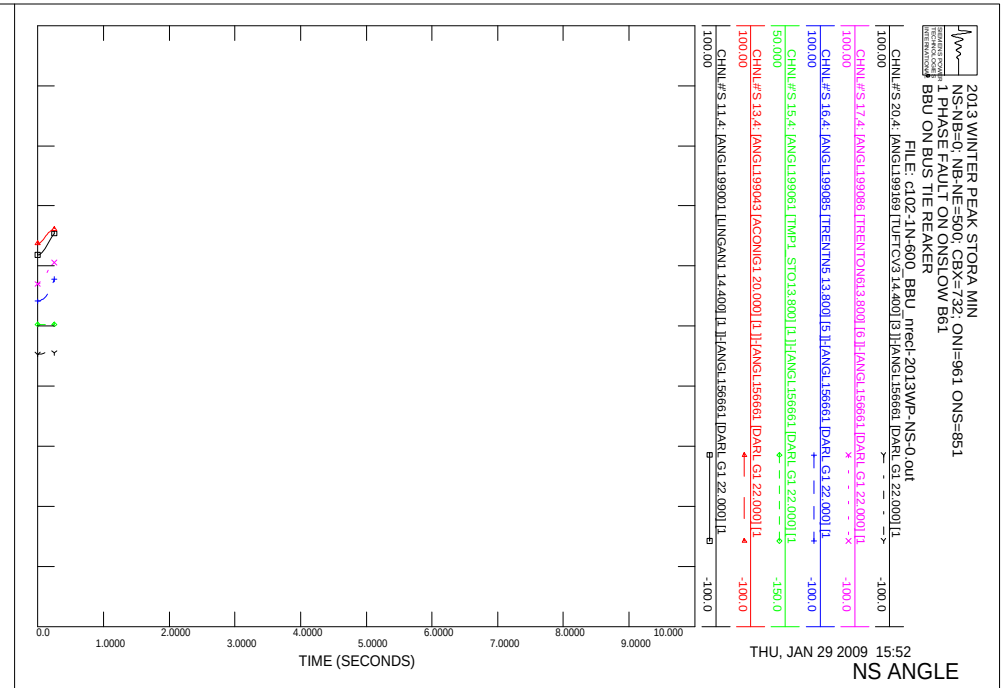
2013 WINTER PEAK STORA MIN
NS-NB=0; NB-NE=500; CBX=732; ONI=961 ONS=851
1 PHASE FAULT ON ONSLOW B61
BBU ON BUS TIE REAKER
FILE: c102-1N-600_BBU_nrecl-2013WP-NS-0.out
CHNL#S 20,4: [ANGL199169 [TUFTCV3 14.400] [3]]-[ANGL156661 [DARL G1 22.000] [1
CHNL#S 17,4: [ANGL199086 [TRENTON613.800] [6]]-[ANGL156661 [DARL G1 22.000] [1
CHNL#S 16,4: [ANGL199085 [TRENTN5 13.800] [5]]-[ANGL156661 [DARL G1 22.000] [1
CHNL#S 15,4: [ANGL199061 [TMP1 STO13.800] [1]]-[ANGL156661 [DARL G1 22.000] [1
CHNL#S 13,4: [ANGL199043 [ACONIG1 20.000] [1]]-[ANGL156661 [DARL G1 22.000] [1
CHNL#S 11,4: [ANGL199001 [LINGAN1 14.400] [1]]-[ANGL156661 [DARL G1 22.000] [1
100.00
-100.0
50.000
-150.0
0.0
1.0000
2.0000
3.0000
4.0000
5.0000
6.0000
7.0000
8.0000
9.0000
10.000
TIME (SECONDS)
THU, JAN 29 2009 15:52
NS ANGLE

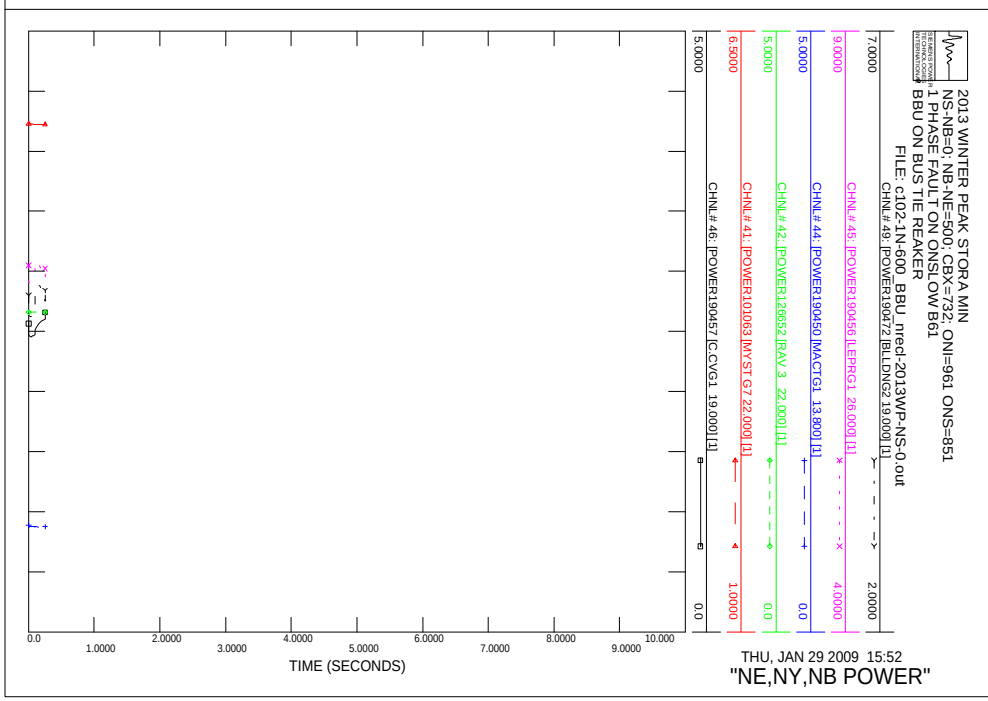
2013 WINTER PEAK STORA MIN
NS-NB=0; NB-NE=500; CBX=732; ONI=961 ONS=851
1 PHASE FAULT ON ONSLOW B61
BBU ON BUS TIE REAKER
FILE: c102-1N-600_BBU_nrecl-2013WP-NS-0.out
CHNL# 49: [POWER190472 [BLLDNG2 19.000] [1]
CHNL# 45: [POWER190456 [LEPRG1 26.000] [1]
CHNL# 44: [POWER190450 [MACTG1 13.800] [1]
CHNL# 42: [POWER126652 [RAV 3 22.000] [1]
CHNL# 41: [POWER101063 [MYST G7 22.000] [1]
CHNL# 46: [POWER190457 [C.CVG1 19.000] [1]
7.0000
2.0000
9.0000
4.0000
5.0000
0.0
6.5000
1.0000
5.0000
0.0
0.0
1.0000
2.0000
3.0000
4.0000
5.0000
6.0000
7.0000
8.0000
9.0000
10.000
TIME (SECONDS)
THU, JAN 29 2009 15:52
"NE,NY,NB POWER"

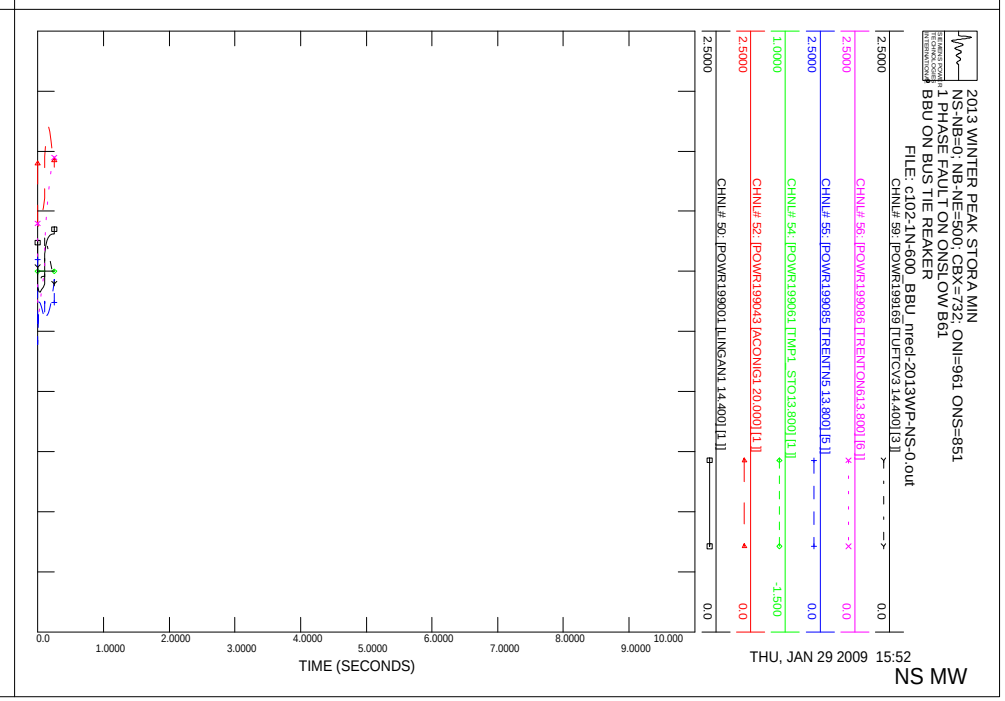
2013 WINTER PEAK STORA MIN
NS-NB=0; NB-NE=500; CBX=732; ONI=961 ONS=851
1 PHASE FAULT ON ONSLOW B61
BBU ON BUS TIE REAKER
FILE: c102-1N-600_BBU_nrecl-2013WP-NS-0.out
CHNL# 59: [POWR199169 [TUFTCV3 14.400] [3]]
CHNL# 56: [POWR199086 [TRENTON613.800] [6]]
CHNL# 55: [POWR199085 [TRENTN5 13.800] [5]]
CHNL# 54: [POWR199061 [TMP1 STO13.800] [1]]
CHNL# 52: [POWR199043 [ACONIG1 20.000] [1]]
CHNL# 50: [POWR199001 [LINGAN1 14.400] [1]]
2.5000
0.0
2.5000
0.0
2.5000
0.0
1.0000
-1.500
2.5000
0.0
2.5000
0.0
0.0
1.0000
2.0000
3.0000
4.0000
5.0000
6.0000
7.0000
8.0000
9.0000
10.000
TIME (SECONDS)
THU, JAN 29 2009 15:52
NS MW

2013 WINTER PEAK STORA MIN
NS-NB=0; NB-NE=500; CBX=732; ONI=961 ONS=851
1 PHASE FAULT ON ONSLOW B61
BBU ON BUS TIE REAKER
FILE: c102-1N-600_BBU_nrect-2013WP-NS-0.out
CHNL# 119: [VARS IR141-DIGBY]
0.50000
-0.5000
CHNL# 118: [VARS IR137-STATIA]
CHNL# 117: [VARS IR114-GLENDHU]
CHNL# 116: [VARS IR84-DALHOUSIE]
CHNL# 115: [VARS IR82_NUTTBY]
CHNL# 114: [VARS IR45_AMHERST]
0.0
1.0000
2.0000
3.0000
4.0000
5.0000
6.0000
7.0000
8.0000
9.0000
10.000
TIME (SECONDS)
THU, JAN 29 2009 15:52
NS WIND MV

2013 WINTER PEAK STORA MIN
NS-NB=0; NB-NE=500; CBX=732; ONI=961 ONS=851
1 PHASE FAULT ON ONSLOW B61
BBU ON BUS TIE REAKER
FILE: c102-1N-600_BBU_nrect-2013WP-NS-0.out
CHNL# 79: [POWER IR141-DIGBY]
1.0000
0.0
CHNL# 78: [POWER IR137-STATIA]
CHNL# 77: [POWER IR114-GLENDHU]
CHNL# 76: [POWER IR84-DALHOUSIE]
CHNL# 75: [POWER IR82_NUTTBY]
CHNL# 74: [POWER IR45_AMHERST]
1.0000
0.0
1.0000
2.0000
3.0000
4.0000
5.0000
6.0000
7.0000
8.0000
9.0000
10.000
TIME (SECONDS)
THU, JAN 29 2009 15:52
NS WIND MW

2013 WINTER PEAK STORA MIN
NS-NB=0; NB-NE=500; CBX=732; ONI=961 ONS=851
1 PHASE FAULT ON ONSLOW B61
BBU ON BUS TIE REAKER
FILE: c102-1N-600_BBU_nrect-2013WP-NS-0.out
CHNL# 133: [VOLT199125 [ONSLOW 345.00]]
1.1000
0.90000
CHNL# 132: [VOLT199120 [HOPEWELL345.00]]
CHNL# 131: [VOLT199045 [WOODBINE345.00]]
CHNL# 130: [VOLT190320 [SALBRY 345.00]]
CHNL# 128: [VOLT190004 [KESWICK 345.00]]
CHNL# 127: [VOLT 70002 [ORRINGTN345.00]]
0.0
1.0000
2.0000
3.0000
4.0000
5.0000
6.0000
7.0000
8.0000
9.0000
10.000
TIME (SECONDS)
THU, JAN 29 2009 15:52
"345KV VOLTAGE"

2013 WINTER PEAK STORA MIN
NS-NB=0; NB-NE=500; CBX=732; ONI=961 ONS=851
1 PHASE FAULT ON ONSLOW B61
BBU ON BUS TIE REAKER
FILE: c102-1N-600_BBU_nrect-2013WP-NS-0.out
CHNL# 125: [60*(1+[FREQ199125 [ONSLOW 345.00]])]
60.500
59.500
CHNL# 124: [60*(1+[FREQ199120 [HOPEWELL345.00]])]
CHNL# 123: [60*(1+[FREQ199045 [WOODBINE345.00]])]
CHNL# 122: [60*(1+[FREQ190320 [SALBRY 345.00]])]
CHNL# 121: [60*(1+[FREQ190197 [C.COVE 345.00]])]
CHNL# 120: [60*(1+[FREQ 70002 [ORRINGTN345.00]])]
0.0
1.0000
2.0000
3.0000
4.0000
5.0000
6.0000
7.0000
8.0000
9.0000
10.000
TIME (SECONDS)
THU, JAN 29 2009 15:52
FREQUENCY HZ

2013 WINTER PEAK STORA MIN
NS-NB=0; NB-NE=500; CBX=732; ONI=961 ONS=851
1 PHASE FAULT ON ONSLOW B61
BBU ON BUS TIE REAKER
FILE: c102-1N-600_BBU_nrect-2013WP-NS-0.out
CHNL# 146: [VOLT199280 [TUSKET A138.00]]
CHNL# 145: [VOLT199193 [HHWAS 138.00]]
CHNL# 144: [VOLT199165 [TUFTCOVE138.00]]
CHNL# 143: [VOLT199138 [SPRNGHIL138.00]]
CHNL# 142: [VOLT199090 [SON-TREN138.00]]
CHNL# 141: [VOLT199051 [HASTINGS138.00]]
1.2000
0.70000
0.0
1.0000
2.0000
3.0000
4.0000
5.0000
6.0000
7.0000
8.0000
9.0000
10.000
TIME (SECONDS)
THU, JAN 29 2009 15:52
138KV BUS VOLTS

2013 WINTER PEAK STORA MIN
NS-NB=0; NB-NE=500; CBX=732; ONI=961 ONS=851
1 PHASE FAULT ON ONSLOW B61
BBU ON BUS TIE REAKER
FILE: c102-1N-600_BBU_nrect-2013WP-NS-0.out
CHNL# 140: [VOLT199240 [BWATER A230.00]]
CHNL# 139: [VOLT199200 [BRUSHY 230.00]]
CHNL# 138: [VOLT199130 [ONSLOW 230.00]]
CHNL# 137: [VOLT199050 [HASTINGS230.00]]
CHNL# 136: [VOLT199044 [PT.ACONI230.00]]
CHNL# 135: [VOLT199000 [LINGAN 230.00]]
1.2000
0.70000
0.0
1.0000
2.0000
3.0000
4.0000
5.0000
6.0000
7.0000
8.0000
9.0000
10.000
TIME (SECONDS)
THU, JAN 29 2009 15:52
230KV BUS VOLTS

2013 WINTER PEAK STORA MIN
NS-NB=0; NB-NE=500; CBX=732; ONI=961 ONS=851
1 PHASE FAULT ON ONSLOW B61
BBU ON BUS TIE REAKER
FILE: c102-1N-600_BBU_nrect-2013WP-NS-0.out
CHNL# 217: [L6513NMW]
CHNL# 215: [L6503MW]
CHNL# 197: [L8003MW]
CHNL# 195: [L8004MW]
CHNL# 193: [L8001MW]
CHNL# 221: [L3001MW]
250.00
500.00
1000.0
0.0
-250.0
-1000.
0.0
1.0000
2.0000
3.0000
4.0000
5.0000
6.0000
7.0000
8.0000
9.0000
10.000
TIME (SECONDS)
THU, JAN 29 2009 15:52
LINE FLOW MW

2013 WINTER PEAK STORA MIN
NS-NB=0; NB-NE=500; CBX=732; ONI=961 ONS=851
1 PHASE FAULT ON ONSLOW B61
BBU ON BUS TIE REAKER
FILE: c102-1N-600_BBU_nrect-2013WP-NS-0.out
CHNL# 154: [IR141-DIGBYH69.0 VOLTS]
CHNL# 153: [IR137-STATIG25.0 VOLTS]
CHNL# 152: [IR114-GLENDH138.0 VOLTS]
CHNL# 151: [IR84-DALHOHV230.0 VOLTS]
CHNL# 150: [IR82-NUTBHV69.0 VOLTS]
CHNL# 149: [IR45-AMHERTP138.0 VOLTS]
1.2000
0.70000
0.0
1.0000
2.0000
3.0000
4.0000
5.0000
6.0000
7.0000
8.0000
9.0000
10.000
TIME (SECONDS)
THU, JAN 29 2009 15:52
WIND BUS VOLTS

2013 WINTER PEAK STORA MIN
NS-NB=0; NB-NE=500; CBX=732; ONI=961 ONS=851
1 PHASE FAULT L6016 AT 120H, BBU ON 120H-622
TRIPS L6016 L6005 IN 14 CYCLES
FILE: c103-120H-622_BBU_nrecl-2013WP-NS-0.out
CHNL#S 20.4: [ANGL199169 [TUFTCV3 14.400] [3]] [ANGL156661 [DARL G1 22.000] [1
CHNL#S 17.4: [ANGL199086 [TRENTON613.800] [6]] [ANGL156661 [DARL G1 22.000] [1
CHNL#S 16.4: [ANGL199085 [TRENTN5 13.800] [5]] [ANGL156661 [DARL G1 22.000] [1
CHNL#S 15.4: [ANGL199061 [TMP1 STO13.800] [1]] [ANGL156661 [DARL G1 22.000] [1
CHNL#S 13.4: [ANGL199043 [ACONIG1 20.000] [1]] [ANGL156661 [DARL G1 22.000] [1
CHNL#S 11.4: [ANGL199001 [LINGAN1 14.400] [1]] [ANGL156661 [DARL G1 22.000] [1
TIME (SECONDS)
THU, JAN 29 2009 15:52
NS ANGLE

2013 WINTER PEAK STORA MIN
NS-NB=0; NB-NE=500; CBX=732; ONI=961 ONS=851
1 PHASE FAULT L6016 AT 120H, BBU ON 120H-622
TRIPS L6016 L6005 IN 14 CYCLES
FILE: c103-120H-622_BBU_nrecl-2013WP-NS-0.out
CHNL#S 10.4: [ANGL190472 [BLLDNG2 19.000] [1]] [ANGL156661 [DARL G1 22.000] [1
CHNL#S 6.4: [ANGL190456 [LEPRG1 26.000] [1]] [ANGL156661 [DARL G1 22.000] [1
CHNL#S 5.4: [ANGL190450 [MACTG1 13.800] [1]] [ANGL156661 [DARL G1 22.000] [1
CHNL#S 3.4: [ANGL126652 [RAV 3 22.000] [1]] [ANGL156661 [DARL G1 22.000] [1
CHNL#S 2.4: [ANGL101063 [MYST G7 22.000] [1]] [ANGL156661 [DARL G1 22.000] [1
CHNL#S 7.4: [ANGL190457 [C.CVG1 19.000] [1]] [ANGL156661 [DARL G1 22.000] [1
TIME (SECONDS)
THU, JAN 29 2009 15:52
"NE,NY,NB ANGLE"

2013 WINTER PEAK STORA MIN
NS-NB=0; NB-NE=500; CBX=732; ONI=961 ONS=851
1 PHASE FAULT L6016 AT 120H, BBU ON 120H-622
TRIPS L6016 L6005 IN 14 CYCLES
FILE: c103-120H-622_BBU_nrecl-2013WP-NS-0.out
CHNL# 59: [POWER199169 [TUFTCV3 14.400] [3]]
CHNL# 56: [POWER199086 [TRENTON613.800] [6]]
CHNL# 55: [POWER199085 [TRENTN5 13.800] [5]]
CHNL# 54: [POWER199061 [TMP1 STO13.800] [1]]
CHNL# 52: [POWER199043 [ACONIG1 20.000] [1]]
CHNL# 50: [POWER199001 [LINGAN1 14.400] [1]]
TIME (SECONDS)
THU, JAN 29 2009 15:52
NS MW

2013 WINTER PEAK STORA MIN
NS-NB=0; NB-NE=500; CBX=732; ONI=961 ONS=851
1 PHASE FAULT L6016 AT 120H, BBU ON 120H-622
TRIPS L6016 L6005 IN 14 CYCLES
FILE: c103-120H-622_BBU_nrecl-2013WP-NS-0.out
CHNL# 49: [POWER190472 [BLLDNG2 19.000] [1]]
CHNL# 45: [POWER190456 [LEPRG1 26.000] [1]]
CHNL# 44: [POWER190450 [MACTG1 13.800] [1]]
CHNL# 42: [POWER126652 [RAV 3 22.000] [1]]
CHNL# 41: [POWER101063 [MYST G7 22.000] [1]]
CHNL# 46: [POWER190457 [C.CVG1 19.000] [1]]
TIME (SECONDS)
THU, JAN 29 2009 15:52
"NE,NY,NB POWER"

2013 WINTER PEAK STORA MIN
NS-NB=0; NB-NE=500; CBX=732; ONI=961 ONS=851
1 PHASE FAULT L6016 AT 120H, BBU ON 120H-622
TRIPS L6016 L6005 IN 14 CYCLES
FILE: c103-120H-622_BBU_nrecl-2013WP-NS-0.out
CHNL# 119: [VARS IR141-DIGBY]
CHNL# 118: [VARS IR137-STATIA]
CHNL# 117: [VARS IR114-GLENDHU]
CHNL# 116: [VARS IR84-DALHOUSIE]
CHNL# 115: [VARS IR82_NUTTBY]
CHNL# 114: [VARS IR45_AMHERST]
0.50000
-0.5000
TIME (SECONDS)
THU, JAN 29 2009 15:52
NS WIND MV

2013 WINTER PEAK STORA MIN
NS-NB=0; NB-NE=500; CBX=732; ONI=961 ONS=851
1 PHASE FAULT L6016 AT 120H, BBU ON 120H-622
TRIPS L6016 L6005 IN 14 CYCLES
FILE: c103-120H-622_BBU_nrecl-2013WP-NS-0.out
CHNL# 79: [POWER IR141-DIGBY]
CHNL# 78: [POWER IR137-STATIA]
CHNL# 77: [POWER IR114-GLENDHU]
CHNL# 76: [POWER IR84-DALHOUSIE]
CHNL# 75: [POWER IR82_NUTTBY]
CHNL# 74: [POWER IR45_AMHERST]
1.0000
0.0
TIME (SECONDS)
THU, JAN 29 2009 15:52
NS WIND MW

2013 WINTER PEAK STORA MIN
NS-NB=0; NB-NE=500; CBX=732; ONI=961 ONS=851
1 PHASE FAULT L6016 AT 120H, BBU ON 120H-622
TRIPS L6016 L6005 IN 14 CYCLES
FILE: c103-120H-622_BBU_nrecl-2013WP-NS-0.out
CHNL# 133: [VOLT199125 IONSLOW 345.00]
CHNL# 132: [VOLT199120 IHOPEWELL345.00]
CHNL# 131: [VOLT199045 IWOODBINE345.00]
CHNL# 130: [VOLT190320 ISALBRY 345.00]
CHNL# 128: [VOLT190004 IKESWICK 345.00]
CHNL# 127: [VOLT 70002 IORRINGTN345.00]
1.1000
0.90000
TIME (SECONDS)
THU, JAN 29 2009 15:52
"345KV VOLTAGE"

2013 WINTER PEAK STORA MIN
NS-NB=0; NB-NE=500; CBX=732; ONI=961 ONS=851
1 PHASE FAULT L6016 AT 120H, BBU ON 120H-622
TRIPS L6016 L6005 IN 14 CYCLES
FILE: c103-120H-622_BBU_nrecl-2013WP-NS-0.out
CHNL# 125: 60*(1+[FREQ199125 IONSLOW 345.00])
CHNL# 124: 60*(1+[FREQ199120 IHOPEWELL345.00])
CHNL# 123: 60*(1+[FREQ199045 IWOODBINE345.00])
CHNL# 122: 60*(1+[FREQ190320 ISALBRY 345.00])
CHNL# 121: 60*(1+[FREQ190197 IC.COVE 345.00])
CHNL# 120: 60*(1+[FREQ 70002 IORRINGTN345.00])
60.500
59.500
TIME (SECONDS)
THU, JAN 29 2009 15:52
FREQUENCY HZ

2013 WINTER PEAK STORA MIN
NS-NB=0; NB-NE=500; CBX=732; ONI=961 ONS=851
1 PHASE FAULT L6016 AT 120H, BBU ON 120H-622
TRIPS L6016 L6005 IN 14 CYCLES
FILE: c103-120H-622_BBU_nrecl-2013WP-NS-0.out
CHNL# 146: [VOLT199280 [TUSKET A138.00]]
CHNL# 145: [VOLT199193 [1H-WAS 138.00]]
CHNL# 144: [VOLT199165 [TUFTCOVE138.00]]
CHNL# 143: [VOLT199135 [SPRNGHIL138.00]]
CHNL# 142: [VOLT199090 [50N-TREN138.00]]
CHNL# 141: [VOLT199051 [HASTINGS138.00]]
1.2000
0.70000
0.0
1.0000
2.0000
3.0000
4.0000
5.0000
6.0000
7.0000
8.0000
9.0000
10.000
TIME (SECONDS)
THU, JAN 29 2009 15:52
138KV BUS VOLTS

2013 WINTER PEAK STORA MIN
NS-NB=0; NB-NE=500; CBX=732; ONI=961 ONS=851
1 PHASE FAULT L6016 AT 120H, BBU ON 120H-622
TRIPS L6016 L6005 IN 14 CYCLES
FILE: c103-120H-622_BBU_nrecl-2013WP-NS-0.out
CHNL# 140: [VOLT199240 [BWATER A230.00]]
CHNL# 139: [VOLT199200 [BRUSHY 230.00]]
CHNL# 138: [VOLT199130 [ONSLOW 230.00]]
CHNL# 137: [VOLT199050 [HASTINGS230.00]]
CHNL# 136: [VOLT199044 [PT.ACONI230.00]]
CHNL# 135: [VOLT199000 [LINGAN 230.00]]
1.2000
0.70000
0.0
1.0000
2.0000
3.0000
4.0000
5.0000
6.0000
7.0000
8.0000
9.0000
10.000
TIME (SECONDS)
THU, JAN 29 2009 15:52
230KV BUS VOLTS

2013 WINTER PEAK STORA MIN
NS-NB=0; NB-NE=500; CBX=732; ONI=961 ONS=851
1 PHASE FAULT L6016 AT 120H, BBU ON 120H-622
TRIPS L6016 L6005 IN 14 CYCLES
FILE: c103-120H-622_BBU_nrecl-2013WP-NS-0.out
CHNL# 217: [L6533MW]
CHNL# 215: [L6503MW]
CHNL# 197: [L8003MW]
CHNL# 195: [L8004MW]
CHNL# 193: [L8001MW]
CHNL# 221: [L3001MW]
250.00
500.00
1000.0
0.0
-250.0
-1000.
0.0
1.0000
2.0000
3.0000
4.0000
5.0000
6.0000
7.0000
8.0000
9.0000
10.000
TIME (SECONDS)
THU, JAN 29 2009 15:52
LINE FLOW MW

2013 WINTER PEAK STORA MIN
NS-NB=0; NB-NE=500; CBX=732; ONI=961 ONS=851
1 PHASE FAULT L6016 AT 120H, BBU ON 120H-622
TRIPS L6016 L6005 IN 14 CYCLES
FILE: c103-120H-622_BBU_nrecl-2013WP-NS-0.out
CHNL# 154: [IR141-DIGBYH69.0 VOLTS]
CHNL# 153: [IR137-STATIG25.0 VOLTS]
CHNL# 152: [IR114-GLENDH138.0 VOLTS]
CHNL# 151: [IR84-DALHOHV230.0 VOLTS]
CHNL# 150: [IR82 NUTBHV69.0 VOLTS]
CHNL# 149: [IR45 AMHERTP138.0 VOLTS]
1.2000
0.70000
0.0
1.0000
2.0000
3.0000
4.0000
5.0000
6.0000
7.0000
8.0000
9.0000
10.000
TIME (SECONDS)
THU, JAN 29 2009 15:52
WIND BUS VOLTS

2013 WINTER PEAK STORA MIN
NS-NB=0; NB-NE=500; CBX=732; ONI=961 ONS=851
1 PHASE FAULT L6033 AT 103H, CLEARED 1H IN 6 CY
103H-632 FAILS, BUS B61 CLEARS
FILE: c104-103H-632_BBU_mecl-2013WP-NS-0.out
CHNL#S 20.4: [ANGL199169 [TUFTCV3 14.400] [3]] [ANGL156661 [DARL G1 22.000] [1
CHNL#S 17.4: [ANGL199086 [TRENTON613.800] [6]] [ANGL156661 [DARL G1 22.000] [1
CHNL#S 16.4: [ANGL199085 [TRENTN5 13.800] [5]] [ANGL156661 [DARL G1 22.000] [1
CHNL#S 15.4: [ANGL199061 [TMP1 STO13.800] [1]] [ANGL156661 [DARL G1 22.000] [1
CHNL#S 13.4: [ANGL199043 [ACONIG1 20.000] [1]] [ANGL156661 [DARL G1 22.000] [1
CHNL#S 11.4: [ANGL199001 [LINGAN1 14.400] [1]] [ANGL156661 [DARL G1 22.000] [1
TIME (SECONDS)
THU, JAN 29 2009 15:52
NS ANGLE

2013 WINTER PEAK STORA MIN
NS-NB=0; NB-NE=500; CBX=732; ONI=961 ONS=851
1 PHASE FAULT L6033 AT 103H, CLEARED 1H IN 6 CY
103H-632 FAILS, BUS B61 CLEARS
FILE: c104-103H-632_BBU_mecl-2013WP-NS-0.out
CHNL#S 10.4: [ANGL190472 [BLLDNG2 19.000] [1]] [ANGL156661 [DARL G1 22.000] [1
CHNL#S 6.4: [ANGL190456 [LEPRG1 26.000] [1]] [ANGL156661 [DARL G1 22.000] [1
CHNL#S 5.4: [ANGL190450 [MACTG1 13.800] [1]] [ANGL156661 [DARL G1 22.000] [1
CHNL#S 3.4: [ANGL126652 [RAV 3 22.000] [1]] [ANGL156661 [DARL G1 22.000] [1
CHNL#S 2.4: [ANGL101063 [MYST G7 22.000] [1]] [ANGL156661 [DARL G1 22.000] [1
CHNL#S 7.4: [ANGL190457 [C.CVG1 19.000] [1]] [ANGL156661 [DARL G1 22.000] [1
TIME (SECONDS)
THU, JAN 29 2009 15:52
"NE,NY,NB ANGLE"

2013 WINTER PEAK STORA MIN
NS-NB=0; NB-NE=500; CBX=732; ONI=961 ONS=851
1 PHASE FAULT L6033 AT 103H, CLEARED 1H IN 6 CY
103H-632 FAILS, BUS B61 CLEARS
FILE: c104-103H-632_BBU_mecl-2013WP-NS-0.out
CHNL# 59: [POWER199169 [TUFTCV3 14.400] [3]]
CHNL# 56: [POWER199086 [TRENTON613.800] [6]]
CHNL# 55: [POWER199085 [TRENTN5 13.800] [5]]
CHNL# 54: [POWER199061 [TMP1 STO13.800] [1]]
CHNL# 52: [POWER199043 [ACONIG1 20.000] [1]]
CHNL# 50: [POWER199001 [LINGAN1 14.400] [1]]
TIME (SECONDS)
THU, JAN 29 2009 15:52
NS MW

2013 WINTER PEAK STORA MIN
NS-NB=0; NB-NE=500; CBX=732; ONI=961 ONS=851
1 PHASE FAULT L6033 AT 103H, CLEARED 1H IN 6 CY
103H-632 FAILS, BUS B61 CLEARS
FILE: c104-103H-632_BBU_mecl-2013WP-NS-0.out
CHNL# 49: [POWER190472 [BLLDNG2 19.000] [1]]
CHNL# 45: [POWER190456 [LEPRG1 26.000] [1]]
CHNL# 44: [POWER190450 [MACTG1 13.800] [1]]
CHNL# 42: [POWER126652 [RAV 3 22.000] [1]]
CHNL# 41: [POWER101063 [MYST G7 22.000] [1]]
CHNL# 46: [POWER190457 [C.CVG1 19.000] [1]]
TIME (SECONDS)
THU, JAN 29 2009 15:52
"NE,NY,NB POWER"

2013 WINTER PEAK STORA MIN
NS-NB=0; NB-NE=500; CBX=732; ONI=961 ONS=851
1 PHASE FAULT L6033 AT 103H, CLEARED 1H IN 6 CY
103H-632 FAILS, BUS B61 CLEARS
FILE: c104-103H-632_BBU_mecl-2013WP-NS-0.out
CHNL# 119: [VARS IR141-DIGBY] 0.50000 -0.5000
CHNL# 118: [VARS IR137-STATIA] 0.50000 -0.5000
CHNL# 117: [VARS IR114-GLENDHU] 0.50000 -0.5000
CHNL# 116: [VARS IR84-DALHOUSIE] 0.50000 -0.5000
CHNL# 115: [VARS IR82_NUTTBY] 0.50000 -0.5000
CHNL# 114: [VARS IR45_AMHERST] 0.50000 -0.5000
TIME (SECONDS)
THU, JAN 29 2009 15:52
NS WIND MV

2013 WINTER PEAK STORA MIN
NS-NB=0; NB-NE=500; CBX=732; ONI=961 ONS=851
1 PHASE FAULT L6033 AT 103H, CLEARED 1H IN 6 CY
103H-632 FAILS, BUS B61 CLEARS
FILE: c104-103H-632_BBU_mecl-2013WP-NS-0.out
CHNL# 79: [POWER IR141-DIGBY] 1.0000 0.0
CHNL# 78: [POWER IR137-STATIA] 1.0000 0.0
CHNL# 77: [POWER IR114-GLENDHU] 1.0000 0.0
CHNL# 76: [POWER IR84-DALHOUSIE] 1.0000 0.0
CHNL# 75: [POWER IR82_NUTTBY] 1.0000 0.0
CHNL# 74: [POWER IR45_AMHERST] 1.0000 0.0
TIME (SECONDS)
THU, JAN 29 2009 15:52
NS WIND MW

2013 WINTER PEAK STORA MIN
NS-NB=0; NB-NE=500; CBX=732; ONI=961 ONS=851
1 PHASE FAULT L6033 AT 103H, CLEARED 1H IN 6 CY
103H-632 FAILS, BUS B61 CLEARS
FILE: c104-103H-632_BBU_mecl-2013WP-NS-0.out
CHNL# 133: [VOLT199125 IONSLOW 345.00] 1.1000 0.90000
CHNL# 132: [VOLT199120 IHOPEWELL345.00] 1.1000 0.90000
CHNL# 131: [VOLT199045 IWOODBINE345.00] 1.1000 0.90000
CHNL# 130: [VOLT190320 ISALBRY 345.00] 1.1000 0.90000
CHNL# 128: [VOLT190004 IKESWICK 345.00] 1.1000 0.90000
CHNL# 127: [VOLT 70002 IORRINGTN345.00] 1.1000 0.90000
TIME (SECONDS)
THU, JAN 29 2009 15:52
"345KV VOLTAGE"

2013 WINTER PEAK STORA MIN
NS-NB=0; NB-NE=500; CBX=732; ONI=961 ONS=851
1 PHASE FAULT L6033 AT 103H, CLEARED 1H IN 6 CY
103H-632 FAILS, BUS B61 CLEARS
FILE: c104-103H-632_BBU_mecl-2013WP-NS-0.out
CHNL# 125: 60*(1+[FREQ199125 IONSLOW 345.00]) 60.500 59.500
CHNL# 124: 60*(1+[FREQ199120 IHOPEWELL345.00]) 60.500 59.500
CHNL# 123: 60*(1+[FREQ199045 IWOODBINE345.00]) 60.500 59.500
CHNL# 122: 60*(1+[FREQ190320 ISALBRY 345.00]) 60.500 59.500
CHNL# 121: 60*(1+[FREQ190197 IC.COVE 345.00]) 60.500 59.500
CHNL# 120: 60*(1+[FREQ 70002 IORRINGTN345.00]) 60.500 59.500
TIME (SECONDS)
THU, JAN 29 2009 15:52
FREQUENCY HZ

2013 WINTER PEAK STORA MIN
NS-NB=0; NB-NE=500; CBX=732; ONI=961 ONS=851
1 PHASE FAULT L6033 AT 103H, CLEARED 1H IN 6 CY
103H-632 FAILS, BUS B61 CLEARS
FILE: c104-103H-632_BBU_nrecl-2013WP-NS-0.out
CHNL# 146: [VOLT199280 [TUSKET A138.00]]
CHNL# 145: [VOLT199193 [1H-WAS 138.00]]
CHNL# 144: [VOLT199165 [TUFTCOVE138.00]]
CHNL# 143: [VOLT199135 [SPRNGHILL138.00]]
CHNL# 142: [VOLT199090 [50N-TREN138.00]]
CHNL# 141: [VOLT199051 [HASTINGS138.00]]
1.2000
0.70000
0.0
1.0000
2.0000
3.0000
4.0000
5.0000
6.0000
7.0000
8.0000
9.0000
10.000
TIME (SECONDS)
THU, JAN 29 2009 15:52
138KV BUS VOLTS

2013 WINTER PEAK STORA MIN
NS-NB=0; NB-NE=500; CBX=732; ONI=961 ONS=851
1 PHASE FAULT L6033 AT 103H, CLEARED 1H IN 6 CY
103H-632 FAILS, BUS B61 CLEARS
FILE: c104-103H-632_BBU_nrecl-2013WP-NS-0.out
CHNL# 140: [VOLT199240 [BWATER A230.00]]
CHNL# 139: [VOLT199200 [BRUSHY 230.00]]
CHNL# 138: [VOLT199130 [ONSLOW 230.00]]
CHNL# 137: [VOLT199050 [HASTINGS230.00]]
CHNL# 136: [VOLT199044 [PT.ACONI230.00]]
CHNL# 135: [VOLT199000 [LINGAN 230.00]]
1.2000
0.70000
0.0
1.0000
2.0000
3.0000
4.0000
5.0000
6.0000
7.0000
8.0000
9.0000
10.000
TIME (SECONDS)
THU, JAN 29 2009 15:52
230KV BUS VOLTS

2013 WINTER PEAK STORA MIN
NS-NB=0; NB-NE=500; CBX=732; ONI=961 ONS=851
1 PHASE FAULT L6033 AT 103H, CLEARED 1H IN 6 CY
103H-632 FAILS, BUS B61 CLEARS
FILE: c104-103H-632_BBU_nrecl-2013WP-NS-0.out
CHNL# 217: [L6533MW]
CHNL# 215: [L6503MW]
CHNL# 197: [L8003MW]
CHNL# 195: [L8004MW]
CHNL# 193: [L8001MW]
CHNL# 221: [L3001MW]
250.00
500.00
1000.0
0.0
-250.0
-1000.
0.0
1.0000
2.0000
3.0000
4.0000
5.0000
6.0000
7.0000
8.0000
9.0000
10.000
TIME (SECONDS)
THU, JAN 29 2009 15:52
LINE FLOW MW

2013 WINTER PEAK STORA MIN
NS-NB=0; NB-NE=500; CBX=732; ONI=961 ONS=851
1 PHASE FAULT L6033 AT 103H, CLEARED 1H IN 6 CY
103H-632 FAILS, BUS B61 CLEARS
FILE: c104-103H-632_BBU_nrecl-2013WP-NS-0.out
CHNL# 154: [IR141-DIGBYH69.0 VOLTS]
CHNL# 153: [IR137-STATIG25.0 VOLTS]
CHNL# 152: [IR114-GLENDH138.0 VOLTS]
CHNL# 151: [IR84-DALHOHV230.0 VOLTS]
CHNL# 150: [IR82_NUTBHV69.0 VOLTS]
CHNL# 149: [IR45_AMHERTP138.0 VOLTS]
1.2000
0.70000
0.0
1.0000
2.0000
3.0000
4.0000
5.0000
6.0000
7.0000
8.0000
9.0000
10.000
TIME (SECONDS)
THU, JAN 29 2009 15:52
WIND BUS VOLTS

2013 WINTER PEAK STORA MIN
NS-NB=0; NB-NE=500; CBX=732; ONI=961 ONS=851
1 PHASE FAULT L6010 AT 90H, 120H END CLEARED IN 6 CY
BBU ON 90H-608 TRIPS L6005 IN 14 CYCLES
FILE: c105-90H-608_BBU_nrecl-2013WP-NS-0.out
CHNL# 20.4: [ANGL199169 [TUFTCV3 14.400] [3]] [ANGL156661 [DARL G1 22.000] [1
CHNL# 17.4: [ANGL199086 [TRENTON613.800] [6]] [ANGL156661 [DARL G1 22.000] [1
CHNL# 16.4: [ANGL199085 [TRENTN5 13.800] [5]] [ANGL156661 [DARL G1 22.000] [1
CHNL# 15.4: [ANGL199061 [TMP1 STO13.800] [1]] [ANGL156661 [DARL G1 22.000] [1
CHNL# 13.4: [ANGL199043 [ACONIG1 20.000] [1]] [ANGL156661 [DARL G1 22.000] [1
CHNL# 11.4: [ANGL199001 [LINGAN1 14.400] [1]] [ANGL156661 [DARL G1 22.000] [1
100.00
-100.0
0.0
1.0000
2.0000
3.0000
4.0000
5.0000
6.0000
7.0000
8.0000
9.0000
10.000
TIME (SECONDS)
THU, JAN 29 2009 15:52
NS ANGLE

2013 WINTER PEAK STORA MIN
NS-NB=0; NB-NE=500; CBX=732; ONI=961 ONS=851
1 PHASE FAULT L6010 AT 90H, 120H END CLEARED IN 6 CY
BBU ON 90H-608 TRIPS L6005 IN 14 CYCLES
FILE: c105-90H-608_BBU_nrecl-2013WP-NS-0.out
CHNL# 10.4: [ANGL190472 [BLLDNG2 19.000] [1]] [ANGL156661 [DARL G1 22.000] [1
CHNL# 6.4: [ANGL190456 [LEPRG1 26.000] [1]] [ANGL156661 [DARL G1 22.000] [1
CHNL# 5.4: [ANGL190450 [MACTG1 13.800] [1]] [ANGL156661 [DARL G1 22.000] [1
CHNL# 3.4: [ANGL126652 [RAV 3 22.000] [1]] [ANGL156661 [DARL G1 22.000] [1
CHNL# 2.4: [ANGL101063 [MYST G7 22.000] [1]] [ANGL156661 [DARL G1 22.000] [1
CHNL# 7.4: [ANGL190457 [C.CVG1 19.000] [1]] [ANGL156661 [DARL G1 22.000] [1
100.00
-100.0
0.0
1.0000
2.0000
3.0000
4.0000
5.0000
6.0000
7.0000
8.0000
9.0000
10.000
TIME (SECONDS)
THU, JAN 29 2009 15:52
"NE,NY,NB ANGLE"

2013 WINTER PEAK STORA MIN
NS-NB=0; NB-NE=500; CBX=732; ONI=961 ONS=851
1 PHASE FAULT L6010 AT 90H, 120H END CLEARED IN 6 CY
BBU ON 90H-608 TRIPS L6005 IN 14 CYCLES
FILE: c105-90H-608_BBU_nrecl-2013WP-NS-0.out
CHNL# 59: [POWR199169 [TUFTCV3 14.400] [3]]
CHNL# 56: [POWR199086 [TRENTON613.800] [6]]
CHNL# 55: [POWR199085 [TRENTN5 13.800] [5]]
CHNL# 54: [POWR199061 [TMP1 STO13.800] [1]]
CHNL# 52: [POWR199043 [ACONIG1 20.000] [1]]
CHNL# 50: [POWR199001 [LINGAN1 14.400] [1]]
2.5000
0.0
-1.500
1.0000
2.0000
3.0000
4.0000
5.0000
6.0000
7.0000
8.0000
9.0000
10.000
TIME (SECONDS)
THU, JAN 29 2009 15:52
NS MW

2013 WINTER PEAK STORA MIN
NS-NB=0; NB-NE=500; CBX=732; ONI=961 ONS=851
1 PHASE FAULT L6010 AT 90H, 120H END CLEARED IN 6 CY
BBU ON 90H-608 TRIPS L6005 IN 14 CYCLES
FILE: c105-90H-608_BBU_nrecl-2013WP-NS-0.out
CHNL# 49: [POWER190472 [BLLDNG2 19.000] [1]]
CHNL# 45: [POWER190456 [LEPRG1 26.000] [1]]
CHNL# 44: [POWER190450 [MACTG1 13.800] [1]]
CHNL# 42: [POWER126652 [RAV 3 22.000] [1]]
CHNL# 41: [POWER101063 [MYST G7 22.000] [1]]
CHNL# 46: [POWER190457 [C.CVG1 19.000] [1]]
7.0000
2.0000
4.0000
0.0
1.0000
5.0000
6.0000
7.0000
8.0000
9.0000
10.000
TIME (SECONDS)
THU, JAN 29 2009 15:52
"NE,NY,NB POWER"

2013 WINTER PEAK STORA MIN
NS-NB=0; NB-NE=500; CBX=732; ONI=961 ONS=851
1 PHASE FAULT L6010 AT 90H_120H END CLEARED IN 6 CY
BBU ON 90H-608 TRIPS L6005 IN 14 CYCLES
FILE: c105-90H-608_BBU_nrecl-2013WP-NS-0.out
CHNL# 119: [VARS IR141-DIGBY]
CHNL# 118: [VARS IR137-STATIA]
CHNL# 117: [VARS IR114-GLENDHU]
CHNL# 116: [VARS IR84-DALHOUSIE]
CHNL# 115: [VARS IR82_NUTTBY]
CHNL# 114: [VARS IR45_AMHERST]
TIME (SECONDS)
THU, JAN 29 2009 15:52
NS WIND MV

2013 WINTER PEAK STORA MIN
NS-NB=0; NB-NE=500; CBX=732; ONI=961 ONS=851
1 PHASE FAULT L6010 AT 90H_120H END CLEARED IN 6 CY
BBU ON 90H-608 TRIPS L6005 IN 14 CYCLES
FILE: c105-90H-608_BBU_nrecl-2013WP-NS-0.out
CHNL# 79: [POWER IR141-DIGBY]
CHNL# 78: [POWER IR137-STATIA]
CHNL# 77: [POWER IR114-GLENDHU]
CHNL# 76: [POWER IR84-DALHOUSIE]
CHNL# 75: [POWER IR82_NUTTBY]
CHNL# 74: [POWER IR45_AMHERST]
TIME (SECONDS)
THU, JAN 29 2009 15:52
NS WIND MW

2013 WINTER PEAK STORA MIN
NS-NB=0; NB-NE=500; CBX=732; ONI=961 ONS=851
1 PHASE FAULT L6010 AT 90H_120H END CLEARED IN 6 CY
BBU ON 90H-608 TRIPS L6005 IN 14 CYCLES
FILE: c105-90H-608_BBU_nrecl-2013WP-NS-0.out
CHNL# 133: [VOLT199125 [ONSLOW 345.00]]
CHNL# 132: [VOLT199120 [HOPEWELL 345.00]]
CHNL# 131: [VOLT199045 [WOODBINE345.00]]
CHNL# 130: [VOLT190320 [SALBRY 345.00]]
CHNL# 128: [VOLT190004 [KESWICK 345.00]]
CHNL# 127: [VOLT 70002 [ORRINGTN345.00]]
TIME (SECONDS)
THU, JAN 29 2009 15:52
"345KV VOLTAGE"

2013 WINTER PEAK STORA MIN
NS-NB=0; NB-NE=500; CBX=732; ONI=961 ONS=851
1 PHASE FAULT L6010 AT 90H_120H END CLEARED IN 6 CY
BBU ON 90H-608 TRIPS L6005 IN 14 CYCLES
FILE: c105-90H-608_BBU_nrecl-2013WP-NS-0.out
CHNL# 125: 60*(1+[FREQ199125 [ONSLOW 345.00]])
CHNL# 124: 60*(1+[FREQ199120 [HOPEWELL 345.00]])
CHNL# 123: 60*(1+[FREQ199045 [WOODBINE345.00]])
CHNL# 122: 60*(1+[FREQ190320 [SALBRY 345.00]])
CHNL# 121: 60*(1+[FREQ190197 [C.COVE 345.00]])
CHNL# 120: 60*(1+[FREQ 70002 [ORRINGTN345.00]])
TIME (SECONDS)
THU, JAN 29 2009 15:52
FREQUENCY HZ

2013 WINTER PEAK STORA MIN
NS-NB=0; NB-NE=500; CBX=732; ONI=961 ONS=851
1 PHASE FAULT L6010 AT 90H, 120H END CLEARED IN 6 CY
BBU ON 90H-608 TRIPS L6005 IN 14 CYCLES
FILE: c105-90H-608_BBU_nrecl-2013WP-NS-0.out
CHNL# 146: [VOLT199280 [TUSKET A138.00]]
CHNL# 145: [VOLT199193 [1H-WAS 138.00]]
CHNL# 144: [VOLT199165 [TUFTCOVE138.00]]
CHNL# 143: [VOLT199138 [SPRNGHLL138.00]]
CHNL# 142: [VOLT199090 [50N-TREN138.00]]
CHNL# 141: [VOLT199051 [HASTINGS138.00]]
1.2000
0.70000
0.0
1.0000
2.0000
3.0000
4.0000
5.0000
6.0000
7.0000
8.0000
9.0000
10.000
TIME (SECONDS)
THU, JAN 29 2009 15:52
138KV BUS VOLTS

2013 WINTER PEAK STORA MIN
NS-NB=0; NB-NE=500; CBX=732; ONI=961 ONS=851
1 PHASE FAULT L6010 AT 90H, 120H END CLEARED IN 6 CY
BBU ON 90H-608 TRIPS L6005 IN 14 CYCLES
FILE: c105-90H-608_BBU_nrecl-2013WP-NS-0.out
CHNL# 140: [VOLT199240 [BWATER A230.00]]
CHNL# 139: [VOLT199200 [BRUSHY 230.00]]
CHNL# 138: [VOLT199130 [ONSLOW 230.00]]
CHNL# 137: [VOLT199050 [HASTINGS230.00]]
CHNL# 136: [VOLT199044 [PT.ACONI230.00]]
CHNL# 135: [VOLT199000 [LINGAN 230.00]]
1.2000
0.70000
0.0
1.0000
2.0000
3.0000
4.0000
5.0000
6.0000
7.0000
8.0000
9.0000
10.000
TIME (SECONDS)
THU, JAN 29 2009 15:52
230KV BUS VOLTS

2013 WINTER PEAK STORA MIN
NS-NB=0; NB-NE=500; CBX=732; ONI=961 ONS=851
1 PHASE FAULT L6010 AT 90H, 120H END CLEARED IN 6 CY
BBU ON 90H-608 TRIPS L6005 IN 14 CYCLES
FILE: c105-90H-608_BBU_nrecl-2013WP-NS-0.out
CHNL# 217: [L6533MW]
CHNL# 215: [L6503MW]
CHNL# 197: [L8003MW]
CHNL# 195: [L8004MW]
CHNL# 193: [L8001MW]
CHNL# 221: [L3001MW]
250.00
500.00
1000.0
0.0
-250.0
-1000.
0.0
1.0000
2.0000
3.0000
4.0000
5.0000
6.0000
7.0000
8.0000
9.0000
10.000
TIME (SECONDS)
THU, JAN 29 2009 15:52
LINE FLOW MW

2013 WINTER PEAK STORA MIN
NS-NB=0; NB-NE=500; CBX=732; ONI=961 ONS=851
1 PHASE FAULT L6010 AT 90H, 120H END CLEARED IN 6 CY
BBU ON 90H-608 TRIPS L6005 IN 14 CYCLES
FILE: c105-90H-608_BBU_nrecl-2013WP-NS-0.out
CHNL# 154: [IR141-DIGBYH69.0 VOLTS]
CHNL# 153: [IR137-STATIG25.0 VOLTS]
CHNL# 152: [IR114-GLENDH138.0 VOLTS]
CHNL# 151: [IR84-DALHOHV230.0 VOLTS]
CHNL# 150: [IR82_NUTBHV69.0 VOLTS]
CHNL# 149: [IR45_AMHERTP138.0 VOLTS]
1.2000
0.70000
0.0
1.0000
2.0000
3.0000
4.0000
5.0000
6.0000
7.0000
8.0000
9.0000
10.000
TIME (SECONDS)
THU, JAN 29 2009 15:52
WIND BUS VOLTS

2013 WINTER PEAK STORA MIN
NS-NB=0; NB-NE=500; CBX=732; ONI=961 ONS=851
1 PHASE FAULT L6008 AT 90H_103H END CLEARED IN 6 CY
BBU ON 90H-611 TRIPS L6009 IN 14 CYCLES
FILE: c106-90H-611_BBU_nrecl-2013WP-NS-0.out
CHNL#S 20.4: [ANGL199169 [TUFTCV3 14.400] [3]] [ANGL156661 [DARL G1 22.000] [1
CHNL#S 17.4: [ANGL199086 [TRENTON613.800] [6]] [ANGL156661 [DARL G1 22.000] [1
CHNL#S 16.4: [ANGL199085 [TRENTN5 13.800] [5]] [ANGL156661 [DARL G1 22.000] [1
CHNL#S 15.4: [ANGL199061 [TMP1 STO13.800] [1]] [ANGL156661 [DARL G1 22.000] [1
CHNL#S 13.4: [ANGL199043 [ACONIG1 20.000] [1]] [ANGL156661 [DARL G1 22.000] [1
CHNL#S 11.4: [ANGL199001 [LINGAN1 14.400] [1]] [ANGL156661 [DARL G1 22.000] [1
TIME (SECONDS)
THU, JAN 29 2009 15:52
NS ANGLE

2013 WINTER PEAK STORA MIN
NS-NB=0; NB-NE=500; CBX=732; ONI=961 ONS=851
1 PHASE FAULT L6008 AT 90H_103H END CLEARED IN 6 CY
BBU ON 90H-611 TRIPS L6009 IN 14 CYCLES
FILE: c106-90H-611_BBU_nrecl-2013WP-NS-0.out
CHNL#S 10.4: [ANGL190472 [BLLDNG2 19.000] [1]] [ANGL156661 [DARL G1 22.000] [1
CHNL#S 6.4: [ANGL190456 [LEPRG1 26.000] [1]] [ANGL156661 [DARL G1 22.000] [1
CHNL#S 5.4: [ANGL190450 [MACTG1 13.800] [1]] [ANGL156661 [DARL G1 22.000] [1
CHNL#S 3.4: [ANGL126652 [RAV 3 22.000] [1]] [ANGL156661 [DARL G1 22.000] [1
CHNL#S 2.4: [ANGL101063 [MYST G7 22.000] [1]] [ANGL156661 [DARL G1 22.000] [1
CHNL#S 7.4: [ANGL190457 [C.CVG1 19.000] [1]] [ANGL156661 [DARL G1 22.000] [1
TIME (SECONDS)
THU, JAN 29 2009 15:52
"NE,NY,NB ANGLE"

2013 WINTER PEAK STORA MIN
NS-NB=0; NB-NE=500; CBX=732; ONI=961 ONS=851
1 PHASE FAULT L6008 AT 90H_103H END CLEARED IN 6 CY
BBU ON 90H-611 TRIPS L6009 IN 14 CYCLES
FILE: c106-90H-611_BBU_nrecl-2013WP-NS-0.out
CHNL# 59: [POWR199169 [TUFTCV3 14.400] [3]]
CHNL# 56: [POWR199086 [TRENTON613.800] [6]]
CHNL# 55: [POWR199085 [TRENTN5 13.800] [5]]
CHNL# 54: [POWR199061 [TMP1 STO13.800] [1]]
CHNL# 52: [POWR199043 [ACONIG1 20.000] [1]]
CHNL# 50: [POWR199001 [LINGAN1 14.400] [1]]
TIME (SECONDS)
THU, JAN 29 2009 15:52
NS MW

2013 WINTER PEAK STORA MIN
NS-NB=0; NB-NE=500; CBX=732; ONI=961 ONS=851
1 PHASE FAULT L6008 AT 90H_103H END CLEARED IN 6 CY
BBU ON 90H-611 TRIPS L6009 IN 14 CYCLES
FILE: c106-90H-611_BBU_nrecl-2013WP-NS-0.out
CHNL# 49: [POWER190472 [BLLDNG2 19.000] [1]]
CHNL# 45: [POWER190456 [LEPRG1 26.000] [1]]
CHNL# 44: [POWER190450 [MACTG1 13.800] [1]]
CHNL# 42: [POWER126652 [RAV 3 22.000] [1]]
CHNL# 41: [POWER101063 [MYST G7 22.000] [1]]
CHNL# 46: [POWER190457 [C.CVG1 19.000] [1]]
TIME (SECONDS)
THU, JAN 29 2009 15:52
"NE,NY,NB POWER"

2013 WINTER PEAK STORA MIN
NS-NB=0; NB-NE=500; CBX=732; ONI=961 ONS=851
1 PHASE FAULT L6008 AT 90H_103H END CLEARED IN 6 CY
BBU ON 90H-611 TRIPS L6009 IN 14 CYCLES
FILE: c106-90H-611_BBU_nrecl-2013WP-NS-0.out
CHNL# 119: [VARS IR141-DIGBY]
CHNL# 118: [VARS IR137-STATIA]
CHNL# 117: [VARS IR114-GLENDHU]
CHNL# 116: [VARS IR84-DALHOUSIE]
CHNL# 115: [VARS IR82_NUTTBY]
CHNL# 114: [VARS IR45_AMHERST]
0.50000
-0.5000
0.0
1.0000
2.0000
3.0000
4.0000
5.0000
6.0000
7.0000
8.0000
9.0000
10.000
TIME (SECONDS)
THU, JAN 29 2009 15:52
NS WIND MV

2013 WINTER PEAK STORA MIN
NS-NB=0; NB-NE=500; CBX=732; ONI=961 ONS=851
1 PHASE FAULT L6008 AT 90H_103H END CLEARED IN 6 CY
BBU ON 90H-611 TRIPS L6009 IN 14 CYCLES
FILE: c106-90H-611_BBU_nrecl-2013WP-NS-0.out
CHNL# 79: [POWER IR141-DIGBY]
CHNL# 78: [POWER IR137-STATIA]
CHNL# 77: [POWER IR114-GLENDHU]
CHNL# 76: [POWER IR84-DALHOUSIE]
CHNL# 75: [POWER IR82_NUTTBY]
CHNL# 74: [POWER IR45_AMHERST]
1.0000
0.0
1.0000
2.0000
3.0000
4.0000
5.0000
6.0000
7.0000
8.0000
9.0000
10.000
TIME (SECONDS)
THU, JAN 29 2009 15:52
NS WIND MW

2013 WINTER PEAK STORA MIN
NS-NB=0; NB-NE=500; CBX=732; ONI=961 ONS=851
1 PHASE FAULT L6008 AT 90H_103H END CLEARED IN 6 CY
BBU ON 90H-611 TRIPS L6009 IN 14 CYCLES
FILE: c106-90H-611_BBU_nrecl-2013WP-NS-0.out
CHNL# 133: [VOLT199125 [ONSLOW 345.00]]
CHNL# 132: [VOLT199120 [HOPEWELL 345.00]]
CHNL# 131: [VOLT199045 [WOODBINE345.00]]
CHNL# 130: [VOLT190320 [SALBRY 345.00]]
CHNL# 128: [VOLT190004 [KESWICK 345.00]]
CHNL# 127: [VOLT 70002 [ORRINGTN345.00]]
1.1000
0.90000
0.0
1.0000
2.0000
3.0000
4.0000
5.0000
6.0000
7.0000
8.0000
9.0000
10.000
TIME (SECONDS)
THU, JAN 29 2009 15:52
"345KV VOLTAGE"

2013 WINTER PEAK STORA MIN
NS-NB=0; NB-NE=500; CBX=732; ONI=961 ONS=851
1 PHASE FAULT L6008 AT 90H_103H END CLEARED IN 6 CY
BBU ON 90H-611 TRIPS L6009 IN 14 CYCLES
FILE: c106-90H-611_BBU_nrecl-2013WP-NS-0.out
CHNL# 125: 60*(1+[FREQ199125 [ONSLOW 345.00]])
CHNL# 124: 60*(1+[FREQ199120 [HOPEWELL 345.00]])
CHNL# 123: 60*(1+[FREQ199045 [WOODBINE345.00]])
CHNL# 122: 60*(1+[FREQ190320 [SALBRY 345.00]])
CHNL# 121: 60*(1+[FREQ190197 [C.COVE 345.00]])
CHNL# 120: 60*(1+[FREQ 70002 [ORRINGTN345.00]])
60.500
59.500
0.0
1.0000
2.0000
3.0000
4.0000
5.0000
6.0000
7.0000
8.0000
9.0000
10.000
TIME (SECONDS)
THU, JAN 29 2009 15:52
FREQUENCY HZ

2013 WINTER PEAK STORA MIN
NS-NB=0; NB-NE=500; CBX=732; ONI=961 ONS=851
1 PHASE FAULT L6008 AT 90H_103H END CLEARED IN 6 CY
BBU ON 90H-611 TRIPS L6009 IN 14 CYCLES
FILE: c106-90H-611_BBU_nrecl-2013WP-NS-0.out
CHNL# 146: [VOLT199280 [TUSKET A138.00]]
CHNL# 145: [VOLT199193 [1H-WAS 138.00]]
CHNL# 144: [VOLT199165 [TUFTCOVE138.00]]
CHNL# 143: [VOLT199138 [SPRNGHIL138.00]]
CHNL# 142: [VOLT199090 [50N-TREN138.00]]
CHNL# 141: [VOLT199051 [HASTINGS138.00]]
1.2000
0.70000
0.0
1.0000
2.0000
3.0000
4.0000
5.0000
6.0000
7.0000
8.0000
9.0000
10.000
TIME (SECONDS)
THU, JAN 29 2009 15:52
138KV BUS VOLTS

2013 WINTER PEAK STORA MIN
NS-NB=0; NB-NE=500; CBX=732; ONI=961 ONS=851
1 PHASE FAULT L6008 AT 90H_103H END CLEARED IN 6 CY
BBU ON 90H-611 TRIPS L6009 IN 14 CYCLES
FILE: c106-90H-611_BBU_nrecl-2013WP-NS-0.out
CHNL# 140: [VOLT199240 [BWATER A230.00]]
CHNL# 139: [VOLT199200 [BRUSHY 230.00]]
CHNL# 138: [VOLT199130 [ONSLOW 230.00]]
CHNL# 137: [VOLT199050 [HASTINGS230.00]]
CHNL# 136: [VOLT199044 [PT.ACONI230.00]]
CHNL# 135: [VOLT199000 [LINGAN 230.00]]
1.2000
0.70000
0.0
1.0000
2.0000
3.0000
4.0000
5.0000
6.0000
7.0000
8.0000
9.0000
10.000
TIME (SECONDS)
THU, JAN 29 2009 15:52
230KV BUS VOLTS

2013 WINTER PEAK STORA MIN
NS-NB=0; NB-NE=500; CBX=732; ONI=961 ONS=851
1 PHASE FAULT L6008 AT 90H_103H END CLEARED IN 6 CY
BBU ON 90H-611 TRIPS L6009 IN 14 CYCLES
FILE: c106-90H-611_BBU_nrecl-2013WP-NS-0.out
CHNL# 217: [L6533MWV]
CHNL# 215: [L6503MWV]
CHNL# 197: [L8003MWV]
CHNL# 195: [L8004MWV]
CHNL# 193: [L8001MWV]
CHNL# 221: [L3001MWV]
250.00
500.00
1000.0
0.0
-250.0
-1000.
0.0
1.0000
2.0000
3.0000
4.0000
5.0000
6.0000
7.0000
8.0000
9.0000
10.000
TIME (SECONDS)
THU, JAN 29 2009 15:52
LINE FLOW MW

2013 WINTER PEAK STORA MIN
NS-NB=0; NB-NE=500; CBX=732; ONI=961 ONS=851
1 PHASE FAULT L6008 AT 90H_103H END CLEARED IN 6 CY
BBU ON 90H-611 TRIPS L6009 IN 14 CYCLES
FILE: c106-90H-611_BBU_nrecl-2013WP-NS-0.out
CHNL# 154: [IR141-DIGBYH69.0 VOLTS]
CHNL# 153: [IR137-STATIG25.0 VOLTS]
CHNL# 152: [IR114-GLENDH138.0 VOLTS]
CHNL# 151: [IR84-DALHOHV230.0 VOLTS]
CHNL# 150: [IR82 NUTBHV69.0 VOLTS]
CHNL# 149: [IR45 AMHERTP138.0 VOLTS]
1.2000
0.70000
0.0
1.0000
2.0000
3.0000
4.0000
5.0000
6.0000
7.0000
8.0000
9.0000
10.000
TIME (SECONDS)
THU, JAN 29 2009 15:52
WIND BUS VOLTS

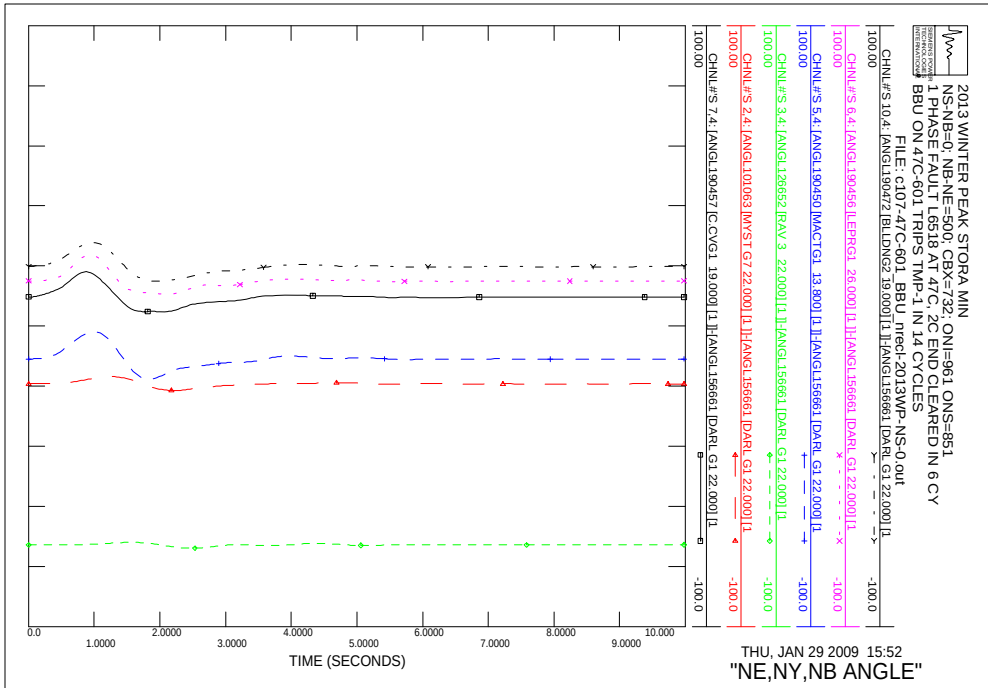
2013 WINTER PEAK STORA MIN
NS-NB=0; NB-NE=500; CBX=732; ONI=961 ONS=851
1 PHASE FAULT L6518 AT 47C, 2C END CLEARED IN 6 CY
BBU ON 47C-601 TRIPS TMP-1 IN 14 CYCLES
FILE: c107-47C-601_BBU_nrecl-2013WP-NS-0.out
CHNL#'S 10,4: [ANGL190472 [BLLDNG2 19.000] [1]]-[ANGL156661 [DARL G1 22.000] [1
CHNL#'S 6,4: [ANGL190456 [LEPRG1 26.000] [1]]-[ANGL156661 [DARL G1 22.000] [1
CHNL#'S 5,4: [ANGL190450 [MACTG1 13.800] [1]]-[ANGL156661 [DARL G1 22.000] [1
CHNL#'S 3,4: [ANGL126652 [RAV 3 22.000] [1]]-[ANGL156661 [DARL G1 22.000] [1
CHNL#'S 2,4: [ANGL101063 [MYST G7 22.000] [1]]-[ANGL156661 [DARL G1 22.000] [1
CHNL#'S 7,4: [ANGL190457 [C.CVG1 19.000] [1]]-[ANGL156661 [DARL G1 22.000] [1
TIME (SECONDS)
THU, JAN 29 2009 15:52
"NE,NY,NB ANGLE"

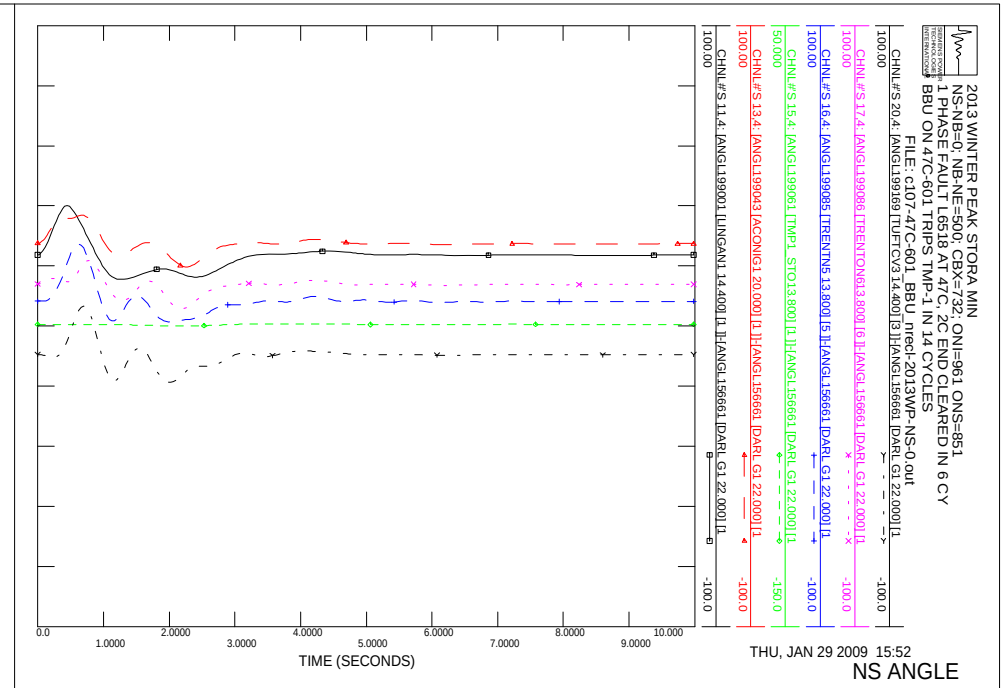
2013 WINTER PEAK STORA MIN
NS-NB=0; NB-NE=500; CBX=732; ONI=961 ONS=851
1 PHASE FAULT L6518 AT 47C, 2C END CLEARED IN 6 CY
BBU ON 47C-601 TRIPS TMP-1 IN 14 CYCLES
FILE: c107-47C-601_BBU_nrecl-2013WP-NS-0.out
CHNL#'S 20,4: [ANGL199169 [TUFTCV3 14.400] [3]]-[ANGL156661 [DARL G1 22.000] [1
CHNL#'S 17,4: [ANGL199086 [TRENTON613.800] [6]]-[ANGL156661 [DARL G1 22.000] [1
CHNL#'S 16,4: [ANGL199085 [TRENTN5 13.800] [5]]-[ANGL156661 [DARL G1 22.000] [1
CHNL#'S 15,4: [ANGL199061 [TMP1 STO13.800] [1]]-[ANGL156661 [DARL G1 22.000] [1
CHNL#'S 13,4: [ANGL199043 [ACONIG1 20.000] [1]]-[ANGL156661 [DARL G1 22.000] [1
CHNL#'S 11,4: [ANGL199001 [LINGAN1 14.400] [1]]-[ANGL156661 [DARL G1 22.000] [1
TIME (SECONDS)
THU, JAN 29 2009 15:52
NS ANGLE

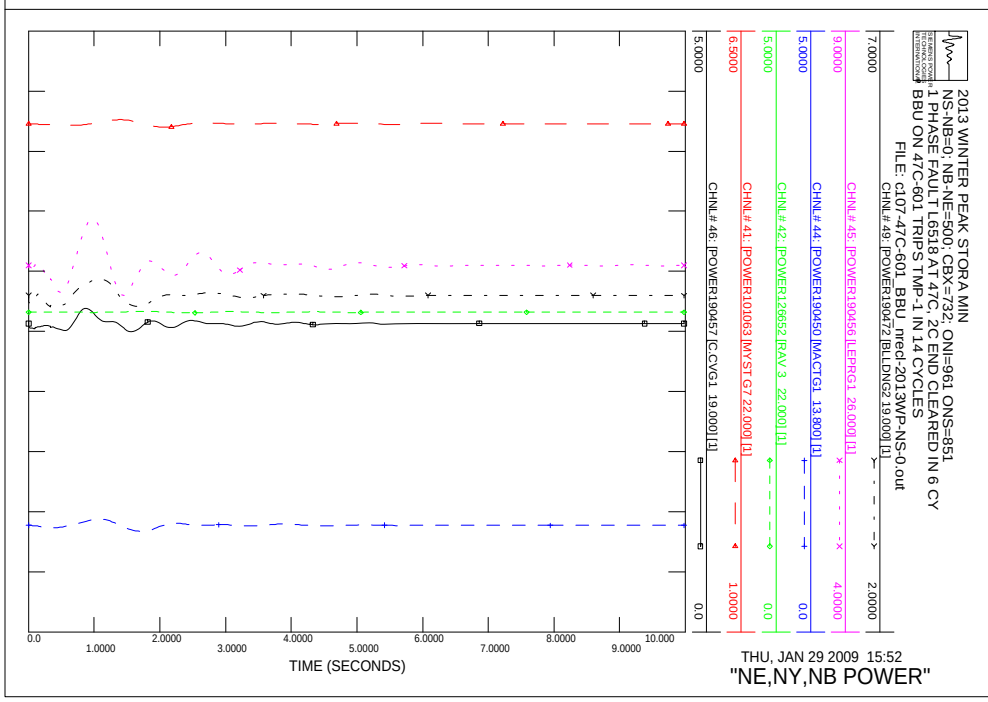
2013 WINTER PEAK STORA MIN
NS-NB=0; NB-NE=500; CBX=732; ONI=961 ONS=851
1 PHASE FAULT L6518 AT 47C, 2C END CLEARED IN 6 CY
BBU ON 47C-601 TRIPS TMP-1 IN 14 CYCLES
FILE: c107-47C-601_BBU_nrecl-2013WP-NS-0.out
CHNL# 49: [POWER190472 [BLLDNG2 19.000] [1]]
CHNL# 45: [POWER190456 [LEPRG1 26.000] [1]]
CHNL# 44: [POWER190450 [MACTG1 13.800] [1]]
CHNL# 42: [POWER126652 [RAV 3 22.000] [1]]
CHNL# 41: [POWER101063 [MYST G7 22.000] [1]]
CHNL# 46: [POWER190457 [C.CVG1 19.000] [1]]
TIME (SECONDS)
THU, JAN 29 2009 15:52
"NE,NY,NB POWER"

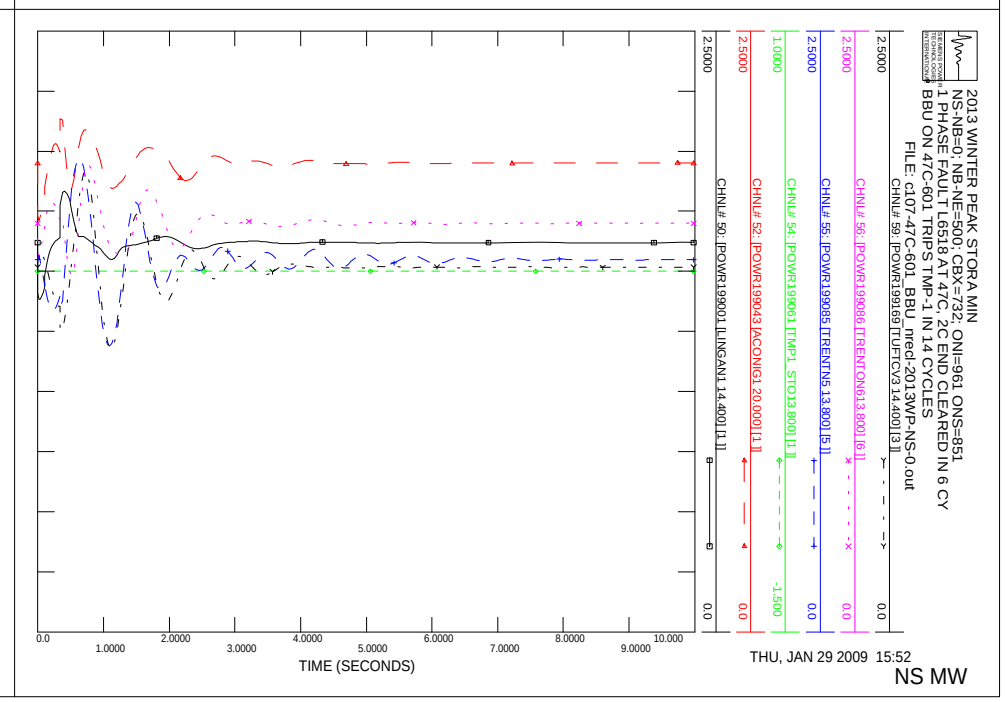
2013 WINTER PEAK STORA MIN
NS-NB=0; NB-NE=500; CBX=732; ONI=961 ONS=851
1 PHASE FAULT L6518 AT 47C, 2C END CLEARED IN 6 CY
BBU ON 47C-601 TRIPS TMP-1 IN 14 CYCLES
FILE: c107-47C-601_BBU_nrecl-2013WP-NS-0.out
CHNL# 59: [POWR199169 [TUFTCV3 14.400] [3]]
CHNL# 56: [POWR199086 [TRENTON613.800] [6]]
CHNL# 55: [POWR199085 [TRENTN5 13.800] [5]]
CHNL# 54: [POWR199061 [TMP1 STO13.800] [1]]
CHNL# 52: [POWR199043 [ACONIG1 20.000] [1]]
CHNL# 50: [POWR199001 [LINGAN1 14.400] [1]]
TIME (SECONDS)
THU, JAN 29 2009 15:52
NS MW

NS WIND MV

NS WIND MW

"345KV VOLTAGE"

FREQUENCY HZ

2013 WINTER PEAK STORA MIN
NS-NB=0; NB-NE=500; CBX=732; ONI=961 ONS=851
1 PHASE FAULT L6518 AT 47C, 2C END CLEARED IN 6 CY
BBU ON 47C-601 TRIPS TMP-1 IN 14 CYCLES
FILE: c107-47C-601_BBU_nrecl-2013WP-NS-0.out
CHNL# 146: [VOLT199280 [TUSKET A138.00]]
CHNL# 145: [VOLT199193 [LH-WAS 138.00]]
CHNL# 144: [VOLT199165 [TUFTCOVE138.00]]
CHNL# 143: [VOLT199135 [SPRNGHILL138.00]]
CHNL# 142: [VOLT199090 [SON-TREN138.00]]
CHNL# 141: [VOLT199051 [HASTINGS138.00]]
1.2000
0.70000
0.0
1.0000
2.0000
3.0000
4.0000
5.0000
6.0000
7.0000
8.0000
9.0000
10.000
TIME (SECONDS)
THU, JAN 29 2009 15:52
138KV BUS VOLTS

2013 WINTER PEAK STORA MIN
NS-NB=0; NB-NE=500; CBX=732; ONI=961 ONS=851
1 PHASE FAULT L6518 AT 47C, 2C END CLEARED IN 6 CY
BBU ON 47C-601 TRIPS TMP-1 IN 14 CYCLES
FILE: c107-47C-601_BBU_nrecl-2013WP-NS-0.out
CHNL# 140: [VOLT199240 [BWATER A230.00]]
CHNL# 139: [VOLT199200 [BRUSHY 230.00]]
CHNL# 138: [VOLT199130 [ONSLOW 230.00]]
CHNL# 137: [VOLT199050 [HASTINGS230.00]]
CHNL# 136: [VOLT199044 [PT.ACONI230.00]]
CHNL# 135: [VOLT199000 [LINGAN 230.00]]
1.2000
0.70000
0.0
1.0000
2.0000
3.0000
4.0000
5.0000
6.0000
7.0000
8.0000
9.0000
10.000
TIME (SECONDS)
THU, JAN 29 2009 15:52
230KV BUS VOLTS

2013 WINTER PEAK STORA MIN
NS-NB=0; NB-NE=500; CBX=732; ONI=961 ONS=851
1 PHASE FAULT L6518 AT 47C, 2C END CLEARED IN 6 CY
BBU ON 47C-601 TRIPS TMP-1 IN 14 CYCLES
FILE: c107-47C-601_BBU_nrecl-2013WP-NS-0.out
CHNL# 217: [L6533MW]
CHNL# 215: [L6503MW]
CHNL# 197: [L8003MW]
CHNL# 195: [L8004MW]
CHNL# 193: [L8001MW]
CHNL# 221: [L3001MW]
250.00
500.00
1000.0
0.0
-250.0
-1000.
0.0
1.0000
2.0000
3.0000
4.0000
5.0000
6.0000
7.0000
8.0000
9.0000
10.000
TIME (SECONDS)
THU, JAN 29 2009 15:52
LINE FLOW MW

2013 WINTER PEAK STORA MIN
NS-NB=0; NB-NE=500; CBX=732; ONI=961 ONS=851
1 PHASE FAULT L6518 AT 47C, 2C END CLEARED IN 6 CY
BBU ON 47C-601 TRIPS TMP-1 IN 14 CYCLES
FILE: c107-47C-601_BBU_nrecl-2013WP-NS-0.out
CHNL# 154: [IR141-DIGBYH69.0 VOLTS]
CHNL# 153: [IR137-STATIG25.0 VOLTS]
CHNL# 152: [IR114-GLENDH138.0 VOLTS]
CHNL# 151: [IR84-DALHOHV230.0 VOLTS]
CHNL# 150: [IR82 NUTBHV69.0 VOLTS]
CHNL# 149: [IR45 AMHERTP138.0 VOLTS]
1.2000
0.70000
0.0
1.0000
2.0000
3.0000
4.0000
5.0000
6.0000
7.0000
8.0000
9.0000
10.000
TIME (SECONDS)
THU, JAN 29 2009 15:52
WIND BUS VOLTS

2013 WINTER PEAK STORA MIN
NS-NB=0; NB-NE=500; CBX=732; ONI=961 ONS=851
1 PHASE FAULT ON L5041 AT 91H OPENS FROM 99H IN 9 CYCLE
91H-523 BREAKER FAILS NO BBU INSTALLED; ALL GENS ON
FILE: c108a-91H-523_BBU_mecl-2013WP-NS-0.out
CHNL#S 20.4: [ANGL199169 [TUFTCV3 14.400] [3]] [ANGL156661 [DARL G1 22.000] [1]
100.00
CHNL#S 17.4: [ANGL199086 [TRENTON613.800] [6]] [ANGL156661 [DARL G1 22.000] [1]
100.00
CHNL#S 16.4: [ANGL199085 [TRENTN5 13.800] [5]] [ANGL156661 [DARL G1 22.000] [1]
100.00
CHNL#S 15.4: [ANGL199061 [TMP1 STO13.800] [1]] [ANGL156661 [DARL G1 22.000] [1]
50.000
CHNL#S 13.4: [ANGL199043 [ACONIG1 20.000] [1]] [ANGL156661 [DARL G1 22.000] [1]
100.00
CHNL#S 11.4: [ANGL199001 [LINGAN1 14.400] [1]] [ANGL156661 [DARL G1 22.000] [1]
100.00
-100.0
0.0
1.0000
2.0000
3.0000
4.0000
5.0000
6.0000
7.0000
8.0000
9.0000
10.000
TIME (SECONDS)
THU, JAN 29 2009 15:52
NS ANGLE

2013 WINTER PEAK STORA MIN
NS-NB=0; NB-NE=500; CBX=732; ONI=961 ONS=851
1 PHASE FAULT ON L5041 AT 91H OPENS FROM 99H IN 9 CYCLE
91H-523 BREAKER FAILS NO BBU INSTALLED; ALL GENS ON
FILE: c108a-91H-523_BBU_mecl-2013WP-NS-0.out
CHNL#S 10.4: [ANGL190472 [BLLDNG2 19.000] [1]] [ANGL156661 [DARL G1 22.000] [1]
100.00
CHNL#S 6.4: [ANGL190456 [LEPRG1 26.000] [1]] [ANGL156661 [DARL G1 22.000] [1]
100.00
CHNL#S 5.4: [ANGL190450 [MACTG1 13.800] [1]] [ANGL156661 [DARL G1 22.000] [1]
100.00
CHNL#S 3.4: [ANGL126652 [RAV 3 22.000] [1]] [ANGL156661 [DARL G1 22.000] [1]
100.00
CHNL#S 2.4: [ANGL101063 [MYST G7 22.000] [1]] [ANGL156661 [DARL G1 22.000] [1]
100.00
CHNL#S 7.4: [ANGL190457 [C.CVG1 19.000] [1]] [ANGL156661 [DARL G1 22.000] [1]
100.00
-100.0
0.0
1.0000
2.0000
3.0000
4.0000
5.0000
6.0000
7.0000
8.0000
9.0000
10.000
TIME (SECONDS)
THU, JAN 29 2009 15:52
"NE,NY,NB ANGLE"

2013 WINTER PEAK STORA MIN
NS-NB=0; NB-NE=500; CBX=732; ONI=961 ONS=851
1 PHASE FAULT ON L5041 AT 91H OPENS FROM 99H IN 9 CYCLE
91H-523 BREAKER FAILS NO BBU INSTALLED; ALL GENS ON
FILE: c108a-91H-523_BBU_mecl-2013WP-NS-0.out
CHNL# 59: [POWER199169 [TUFTCV3 14.400] [3]]
2.5000
CHNL# 56: [POWER199086 [TRENTON613.800] [6]]
2.5000
CHNL# 55: [POWER199085 [TRENTN5 13.800] [5]]
2.5000
CHNL# 54: [POWER199061 [TMP1 STO13.800] [1]]
1.0000
CHNL# 52: [POWER199043 [ACONIG1 20.000] [1]]
2.5000
CHNL# 50: [POWER199001 [LINGAN1 14.400] [1]]
2.5000
0.0
-1.500
0.0
1.0000
2.0000
3.0000
4.0000
5.0000
6.0000
7.0000
8.0000
9.0000
10.000
TIME (SECONDS)
THU, JAN 29 2009 15:52
NS MW

2013 WINTER PEAK STORA MIN
NS-NB=0; NB-NE=500; CBX=732; ONI=961 ONS=851
1 PHASE FAULT ON L5041 AT 91H OPENS FROM 99H IN 9 CYCLE
91H-523 BREAKER FAILS NO BBU INSTALLED; ALL GENS ON
FILE: c108a-91H-523_BBU_mecl-2013WP-NS-0.out
CHNL# 49: [POWER190472 [BLLDNG2 19.000] [1]]
7.0000
CHNL# 45: [POWER190456 [LEPRG1 26.000] [1]]
9.0000
CHNL# 44: [POWER190450 [MACTG1 13.800] [1]]
5.0000
CHNL# 42: [POWER126652 [RAV 3 22.000] [1]]
5.0000
CHNL# 41: [POWER101063 [MYST G7 22.000] [1]]
6.5000
CHNL# 46: [POWER190457 [C.CVG1 19.000] [1]]
5.0000
2.0000
4.0000
0.0
1.0000
0.0
1.0000
2.0000
3.0000
4.0000
5.0000
6.0000
7.0000
8.0000
9.0000
10.000
TIME (SECONDS)
THU, JAN 29 2009 15:52
"NE,NY,NB POWER"

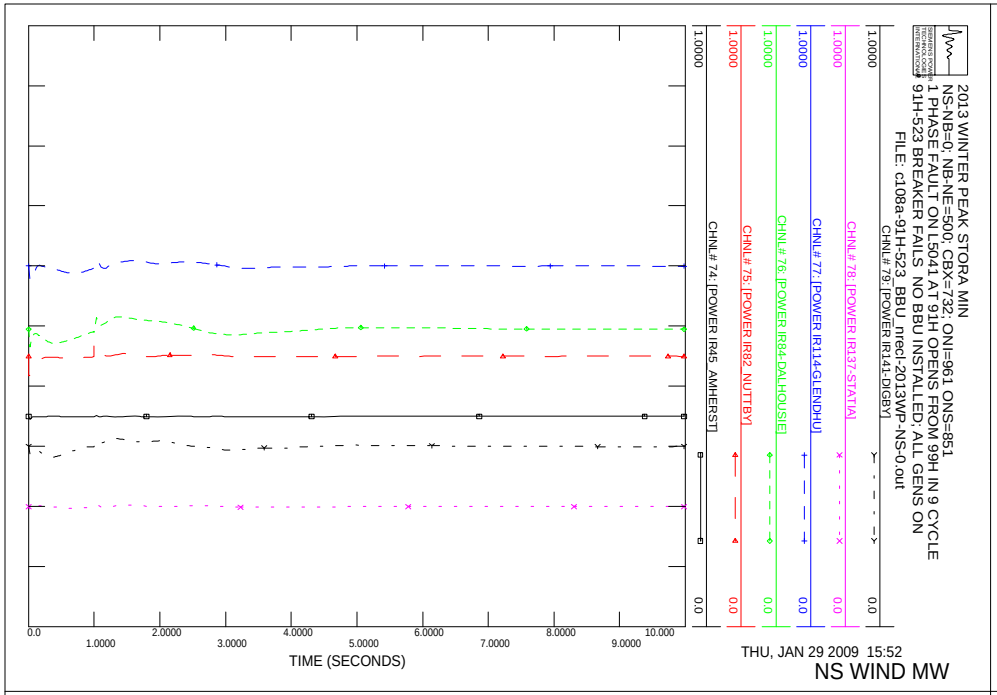
2013 WINTER PEAK STORA MIN
NS-NB=0; NB-NE=500; CBX=732; ONI=961 ONS=851
1 PHASE FAULT ON L5041 AT 91H OPENS FROM 99H IN 9 CYCLE
91H-523 BREAKER FAILS NO BBU INSTALLED; ALL GENS ON
FILE: c108a-91H-523_BBU_nrecl-2013WP-NS-0.out
CHNL# 74: [POWER IR45_AMHERST]
CHNL# 75: [POWER IR82_NUTTBY]
CHNL# 76: [POWER IR84-DALHOUSIE]
CHNL# 77: [POWER IR114-GLENDHU]
CHNL# 78: [POWER IR137-STATIA]
CHNL# 79: [POWER IR141-DIGBY]
TIME (SECONDS)
THU, JAN 29 2009 15:52
NS WIND MW

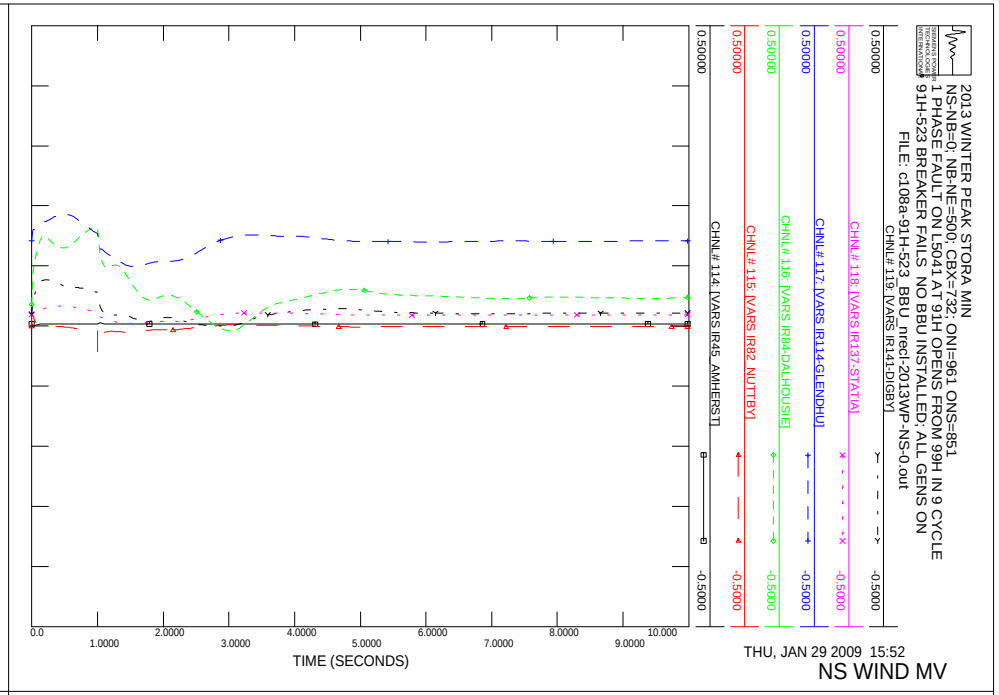
2013 WINTER PEAK STORA MIN
NS-NB=0; NB-NE=500; CBX=732; ONI=961 ONS=851
1 PHASE FAULT ON L5041 AT 91H OPENS FROM 99H IN 9 CYCLE
91H-523 BREAKER FAILS NO BBU INSTALLED; ALL GENS ON
FILE: c108a-91H-523_BBU_nrecl-2013WP-NS-0.out
CHNL# 114: [VARS IR45_AMHERST]
CHNL# 115: [VARS IR82_NUTTBY]
CHNL# 116: [VARS IR84-DALHOUSIE]
CHNL# 117: [VARS IR114-GLENDHU]
CHNL# 118: [VARS IR137-STATIA]
CHNL# 119: [VARS IR141-DIGBY]
TIME (SECONDS)
THU, JAN 29 2009 15:52
NS WIND MV

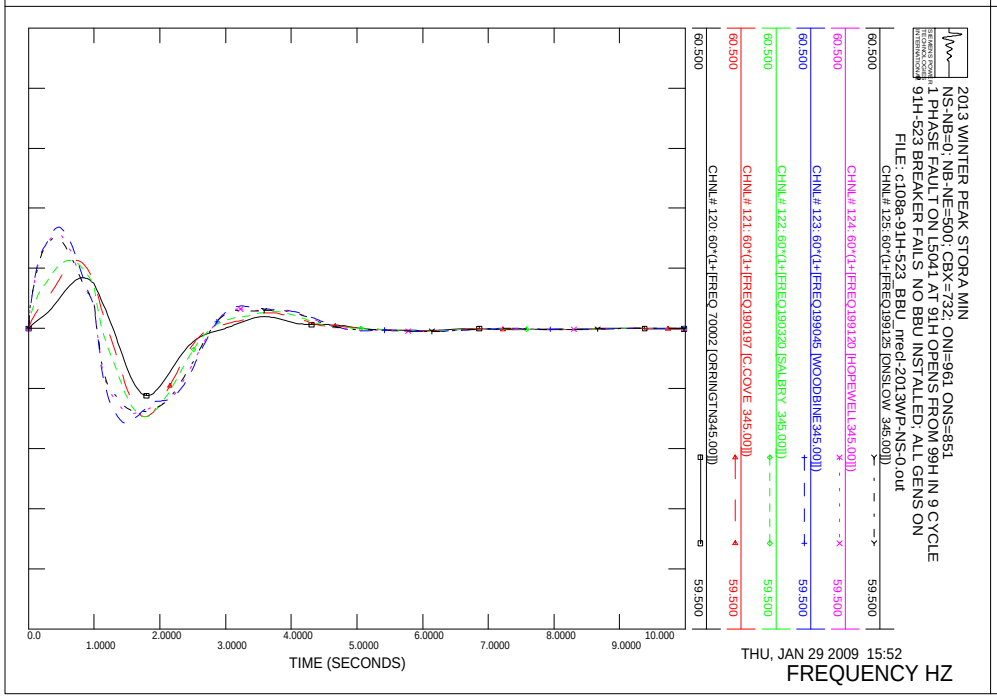
2013 WINTER PEAK STORA MIN
NS-NB=0; NB-NE=500; CBX=732; ONI=961 ONS=851
1 PHASE FAULT ON L5041 AT 91H OPENS FROM 99H IN 9 CYCLE
91H-523 BREAKER FAILS NO BBU INSTALLED; ALL GENS ON
FILE: c108a-91H-523_BBU_nrecl-2013WP-NS-0.out
CHNL# 120: 60*(1+[FREQ 70002 [ORRINGTN345.00]])
CHNL# 121: 60*(1+[FREQ190197 [C.COVE 345.00]])
CHNL# 122: 60*(1+[FREQ190320 [SALBRY 345.00]])
CHNL# 123: 60*(1+[FREQ199045 [WOODBINE345.00]])
CHNL# 124: 60*(1+[FREQ199120 [HOPEWELL345.00]])
CHNL# 125: 60*(1+[FREQ199125 [ONSLOW 345.00]])
TIME (SECONDS)
THU, JAN 29 2009 15:52
FREQUENCY HZ

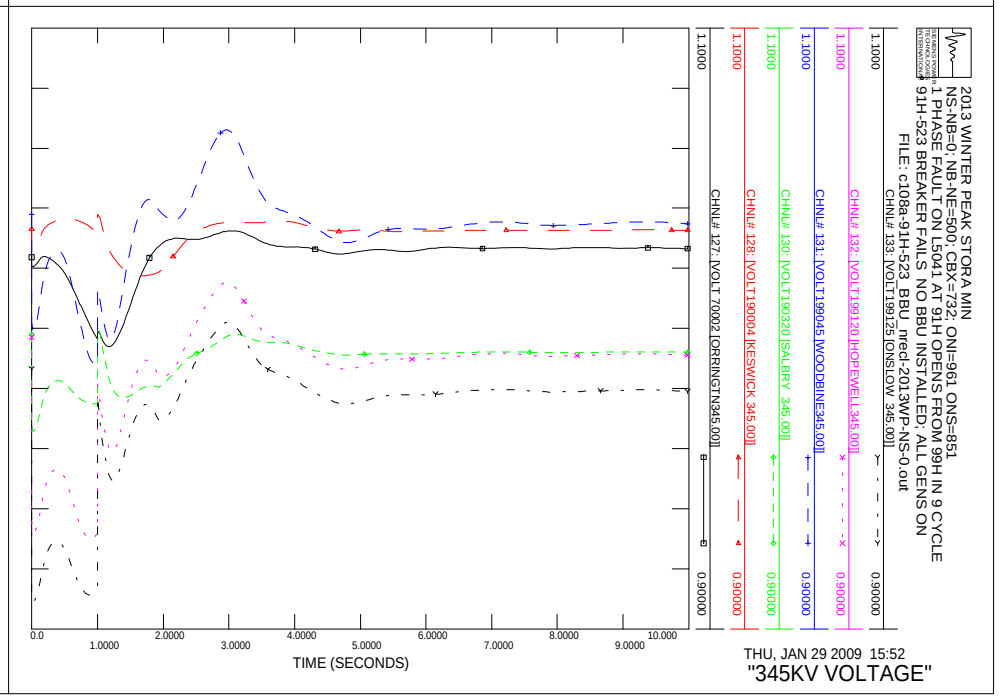
2013 WINTER PEAK STORA MIN
NS-NB=0; NB-NE=500; CBX=732; ONI=961 ONS=851
1 PHASE FAULT ON L5041 AT 91H OPENS FROM 99H IN 9 CYCLE
91H-523 BREAKER FAILS NO BBU INSTALLED; ALL GENS ON
FILE: c108a-91H-523_BBU_nrecl-2013WP-NS-0.out
CHNL# 127: [VOLT 70002 [ORRINGTN345.00]]
CHNL# 128: [VOLT190004 [KESWICK 345.00]]
CHNL# 130: [VOLT190320 [SALBRY 345.00]]
CHNL# 131: [VOLT199045 [WOODBINE345.00]]
CHNL# 132: [VOLT199120 [HOPEWELL345.00]]
CHNL# 133: [VOLT199125 [ONSLOW 345.00]]
TIME (SECONDS)
THU, JAN 29 2009 15:52
"345KV VOLTAGE"

2013 WINTER PEAK STORA MIN
NS-NB=0; NB-NE=500; CBX=732; ONI=961 ONS=851
1 PHASE FAULT ON L5041 AT 91H OPENS FROM 99H IN 9 CYCLE
91H-523 BREAKER FAILS NO BBU INSTALLED; ALL GENS ON
FILE: c108a-91H-523_BBU_mecl-2013WP-NS-0.out
CHNL# 146: [VOLT199280 [TUSKET A138.00]]
CHNL# 145: [VOLT199193 [1H-WAS 138.00]]
CHNL# 144: [VOLT199165 [TUFTCOVE138.00]]
CHNL# 143: [VOLT199138: [SPRNGHILL138.00]]
CHNL# 142: [VOLT199090 [50N-TREN138.00]]
CHNL# 141: [VOLT199051 [HASTINGS138.00]]
1.2000
0.70000
0.0
1.0000
2.0000
3.0000
4.0000
5.0000
6.0000
7.0000
8.0000
9.0000
10.000
TIME (SECONDS)
THU, JAN 29 2009 15:52
138KV BUS VOLTS

2013 WINTER PEAK STORA MIN
NS-NB=0; NB-NE=500; CBX=732; ONI=961 ONS=851
1 PHASE FAULT ON L5041 AT 91H OPENS FROM 99H IN 9 CYCLE
91H-523 BREAKER FAILS NO BBU INSTALLED; ALL GENS ON
FILE: c108a-91H-523_BBU_mecl-2013WP-NS-0.out
CHNL# 140: [VOLT199240 [BWATER A230.00]]
CHNL# 139: [VOLT199200 [BRUSHY 230.00]]
CHNL# 138: [VOLT199130 [ONSLOW 230.00]]
CHNL# 137: [VOLT199050 [HASTINGS230.00]]
CHNL# 136: [VOLT199044 [PT.ACONI230.00]]
CHNL# 135: [VOLT199000 [LINGAN 230.00]]
1.2000
0.70000
0.0
1.0000
2.0000
3.0000
4.0000
5.0000
6.0000
7.0000
8.0000
9.0000
10.000
TIME (SECONDS)
THU, JAN 29 2009 15:52
230KV BUS VOLTS

2013 WINTER PEAK STORA MIN
NS-NB=0; NB-NE=500; CBX=732; ONI=961 ONS=851
1 PHASE FAULT ON L5041 AT 91H OPENS FROM 99H IN 9 CYCLE
91H-523 BREAKER FAILS NO BBU INSTALLED; ALL GENS ON
FILE: c108a-91H-523_BBU_mecl-2013WP-NS-0.out
CHNL# 217: [L6533MW]
CHNL# 215: [L6503MW]
CHNL# 197: [L8003MW]
CHNL# 195: [L8004MW]
CHNL# 193: [L8001MW]
CHNL# 221: [L3001MW]
250.00
500.00
1000.0
0.0
-250.0
-1000.
0.0
1.0000
2.0000
3.0000
4.0000
5.0000
6.0000
7.0000
8.0000
9.0000
10.000
TIME (SECONDS)
THU, JAN 29 2009 15:52
LINE FLOW MW

2013 WINTER PEAK STORA MIN
NS-NB=0; NB-NE=500; CBX=732; ONI=961 ONS=851
1 PHASE FAULT ON L5041 AT 91H OPENS FROM 99H IN 9 CYCLE
91H-523 BREAKER FAILS NO BBU INSTALLED; ALL GENS ON
FILE: c108a-91H-523_BBU_mecl-2013WP-NS-0.out
CHNL# 154: [IR141-DIGBYH69.0 VOLTS]
CHNL# 153: [IR137-STATIG25.0 VOLTS]
CHNL# 152: [IR114-GLENDH138.0 VOLTS]
CHNL# 151: [IR84-DALHOHV230.0 VOLTS]
CHNL# 150: [IR82 NUTBHV69.0 VOLTS]
CHNL# 149: [IR45 AMHERTP138.0 VOLTS]
1.2000
0.70000
0.0
1.0000
2.0000
3.0000
4.0000
5.0000
6.0000
7.0000
8.0000
9.0000
10.000
TIME (SECONDS)
THU, JAN 29 2009 15:52
WIND BUS VOLTS

2013 WINTER PEAK STORA MIN
NS-NB=0; NB-NE=500; CBX=732; ONI=961 ONS=851
1 PHASE FAULT ON L5041 AT 91H OPENS FROM 99H IN 9 CYCLE
91H-523 BREAKER FAILS NO BBU INSTALLED; TC 1 OFF
FILE: c108b-91H-523_BBU_mecl-2013WP-NS-0.out
CHNL#S 20.4: [ANGL199169 [TUFTCV3 14.400] [3]] [ANGL156661 [DARL G1 22.000] [1]
CHNL#S 17.4: [ANGL199086 [TRENTON613.800] [6]] [ANGL156661 [DARL G1 22.000] [1]
CHNL#S 16.4: [ANGL199085 [TRENTN5 13.800] [5]] [ANGL156661 [DARL G1 22.000] [1]
CHNL#S 15.4: [ANGL199061 [TMP1 STO13.800] [1]] [ANGL156661 [DARL G1 22.000] [1]
CHNL#S 13.4: [ANGL199043 [ACONIG1 20.000] [1]] [ANGL156661 [DARL G1 22.000] [1]
CHNL#S 11.4: [ANGL199001 [LINGAN1 14.400] [1]] [ANGL156661 [DARL G1 22.000] [1]
TIME (SECONDS)
THU, JAN 29 2009 15:52
NS ANGLE

2013 WINTER PEAK STORA MIN
NS-NB=0; NB-NE=500; CBX=732; ONI=961 ONS=851
1 PHASE FAULT ON L5041 AT 91H OPENS FROM 99H IN 9 CYCLE
91H-523 BREAKER FAILS NO BBU INSTALLED; TC 1 OFF
FILE: c108b-91H-523_BBU_mecl-2013WP-NS-0.out
CHNL#S 10.4: [ANGL190472 [BLLDNG2 19.000] [1]] [ANGL156661 [DARL G1 22.000] [1]
CHNL#S 6.4: [ANGL190456 [LEPRG1 26.000] [1]] [ANGL156661 [DARL G1 22.000] [1]
CHNL#S 5.4: [ANGL190450 [MACTG1 13.800] [1]] [ANGL156661 [DARL G1 22.000] [1]
CHNL#S 3.4: [ANGL126652 [RAV 3 22.000] [1]] [ANGL156661 [DARL G1 22.000] [1]
CHNL#S 2.4: [ANGL101063 [MYST G7 22.000] [1]] [ANGL156661 [DARL G1 22.000] [1]
CHNL#S 7.4: [ANGL190457 [C.CVG1 19.000] [1]] [ANGL156661 [DARL G1 22.000] [1]
TIME (SECONDS)
THU, JAN 29 2009 15:52
"NE,NY,NB ANGLE"

2013 WINTER PEAK STORA MIN
NS-NB=0; NB-NE=500; CBX=732; ONI=961 ONS=851
1 PHASE FAULT ON L5041 AT 91H OPENS FROM 99H IN 9 CYCLE
91H-523 BREAKER FAILS NO BBU INSTALLED; TC 1 OFF
FILE: c108b-91H-523_BBU_mecl-2013WP-NS-0.out
CHNL# 59: [POWER199169 [TUFTCV3 14.400] [3]]
CHNL# 56: [POWER199086 [TRENTON613.800] [6]]
CHNL# 55: [POWER199085 [TRENTN5 13.800] [5]]
CHNL# 54: [POWER199061 [TMP1 STO13.800] [1]]
CHNL# 52: [POWER199043 [ACONIG1 20.000] [1]]
CHNL# 50: [POWER199001 [LINGAN1 14.400] [1]]
TIME (SECONDS)
THU, JAN 29 2009 15:52
NS MW

2013 WINTER PEAK STORA MIN
NS-NB=0; NB-NE=500; CBX=732; ONI=961 ONS=851
1 PHASE FAULT ON L5041 AT 91H OPENS FROM 99H IN 9 CYCLE
91H-523 BREAKER FAILS NO BBU INSTALLED; TC 1 OFF
FILE: c108b-91H-523_BBU_mecl-2013WP-NS-0.out
CHNL# 49: [POWER190472 [BLLDNG2 19.000] [1]]
CHNL# 45: [POWER190456 [LEPRG1 26.000] [1]]
CHNL# 44: [POWER190450 [MACTG1 13.800] [1]]
CHNL# 42: [POWER126652 [RAV 3 22.000] [1]]
CHNL# 41: [POWER101063 [MYST G7 22.000] [1]]
CHNL# 46: [POWER190457 [C.CVG1 19.000] [1]]
TIME (SECONDS)
THU, JAN 29 2009 15:52
"NE,NY,NB POWER"

2013 WINTER PEAK STORA MIN
NS-NB=0; NB-NE=500; CBX=732; ONI=961 ONS=851
1 PHASE FAULT ON L5041 AT 91H OPENS FROM 99H IN 9 CYCLE
91H-523 BREAKER FAILS NO BBU INSTALLED; TC 1 OFF
FILE: c108b-91H-523_BBU_mecl-2013WP-NS-0.out
CHNL# 119: [VARS IR141-DIGBY] 0.50000 -0.5000
CHNL# 118: [VARS IR137-STATIA] 0.50000 -0.5000
CHNL# 117: [VARS IR114-GLENDHU] 0.50000 -0.5000
CHNL# 116: [VARS IR84-DALHOUSIE] 0.50000 -0.5000
CHNL# 115: [VARS IR82_NUTTBY] 0.50000 -0.5000
CHNL# 114: [VARS IR45_AMHERST] 0.50000 -0.5000
0.0 1.0000 2.0000 3.0000 4.0000 5.0000 6.0000 7.0000 8.0000 9.0000 10.000
TIME (SECONDS)
THU, JAN 29 2009 15:52
NS WIND MV

2013 WINTER PEAK STORA MIN
NS-NB=0; NB-NE=500; CBX=732; ONI=961 ONS=851
1 PHASE FAULT ON L5041 AT 91H OPENS FROM 99H IN 9 CYCLE
91H-523 BREAKER FAILS NO BBU INSTALLED; TC 1 OFF
FILE: c108b-91H-523_BBU_mecl-2013WP-NS-0.out
CHNL# 79: [POWER IR141-DIGBY] 1.0000 0.0
CHNL# 78: [POWER IR137-STATIA] 1.0000 0.0
CHNL# 77: [POWER IR114-GLENDHU] 1.0000 0.0
CHNL# 76: [POWER IR84-DALHOUSIE] 1.0000 0.0
CHNL# 75: [POWER IR82_NUTTBY] 1.0000 0.0
CHNL# 74: [POWER IR45_AMHERST] 1.0000 0.0
0.0 1.0000 2.0000 3.0000 4.0000 5.0000 6.0000 7.0000 8.0000 9.0000 10.000
TIME (SECONDS)
THU, JAN 29 2009 15:52
NS WIND MW

2013 WINTER PEAK STORA MIN
NS-NB=0; NB-NE=500; CBX=732; ONI=961 ONS=851
1 PHASE FAULT ON L5041 AT 91H OPENS FROM 99H IN 9 CYCLE
91H-523 BREAKER FAILS NO BBU INSTALLED; TC 1 OFF
FILE: c108b-91H-523_BBU_mecl-2013WP-NS-0.out
CHNL# 133: [VOLT199125 [ONSLOW 345.00]] 1.1000 0.90000
CHNL# 132: [VOLT199120 [HOPEWELL 345.00]] 1.1000 0.90000
CHNL# 131: [VOLT199045 [WOODBINE345.00]] 1.1000 0.90000
CHNL# 130: [VOLT190320 [SALBRY 345.00]] 1.1000 0.90000
CHNL# 128: [VOLT190004 [KESWICK 345.00]] 1.1000 0.90000
CHNL# 127: [VOLT 70002 [ORRINGTN345.00]] 1.1000 0.90000
0.0 1.0000 2.0000 3.0000 4.0000 5.0000 6.0000 7.0000 8.0000 9.0000 10.000
TIME (SECONDS)
THU, JAN 29 2009 15:52
"345KV VOLTAGE"

2013 WINTER PEAK STORA MIN
NS-NB=0; NB-NE=500; CBX=732; ONI=961 ONS=851
1 PHASE FAULT ON L5041 AT 91H OPENS FROM 99H IN 9 CYCLE
91H-523 BREAKER FAILS NO BBU INSTALLED; TC 1 OFF
FILE: c108b-91H-523_BBU_mecl-2013WP-NS-0.out
CHNL# 125: 60*(1+[FREQ199125 [ONSLOW 345.00]]) 60.500 59.500
CHNL# 124: 60*(1+[FREQ199120 [HOPEWELL 345.00]]) 60.500 59.500
CHNL# 123: 60*(1+[FREQ199045 [WOODBINE345.00]]) 60.500 59.500
CHNL# 122: 60*(1+[FREQ190320 [SALBRY 345.00]]) 60.500 59.500
CHNL# 121: 60*(1+[FREQ190197 [C.COVE 345.00]]) 60.500 59.500
CHNL# 120: 60*(1+[FREQ 70002 [ORRINGTN345.00]]) 60.500 59.500
0.0 1.0000 2.0000 3.0000 4.0000 5.0000 6.0000 7.0000 8.0000 9.0000 10.000
TIME (SECONDS)
THU, JAN 29 2009 15:52
FREQUENCY HZ

2013 WINTER PEAK STORA MIN
NS-NB=0; NB-NE=500; CBX=732; ONI=961 ONS=851
1 PHASE FAULT ON L5041 AT 91H OPENS FROM 99H IN 9 CYCLE
91H-523 BREAKER FAILS NO BBU INSTALLED; TC 1 OFF
FILE: c108b-91H-523_BBU_mecl-2013WP-NS-0.out
CHNL# 146: [VOLT199280 [TUSKET A138.00]]
CHNL# 145: [VOLT199193 [1H-WAS 138.00]]
CHNL# 144: [VOLT199165 [TUFTCOVE138.00]]
CHNL# 143: [VOLT199138 [SPRNGHILL138.00]]
CHNL# 142: [VOLT199090 [50N-TREN138.00]]
CHNL# 141: [VOLT199051 [HASTINGS138.00]]
1.2000
0.70000
0.0
1.0000
2.0000
3.0000
4.0000
5.0000
6.0000
7.0000
8.0000
9.0000
10.000
TIME (SECONDS)
THU, JAN 29 2009 15:52
138KV BUS VOLTS

2013 WINTER PEAK STORA MIN
NS-NB=0; NB-NE=500; CBX=732; ONI=961 ONS=851
1 PHASE FAULT ON L5041 AT 91H OPENS FROM 99H IN 9 CYCLE
91H-523 BREAKER FAILS NO BBU INSTALLED; TC 1 OFF
FILE: c108b-91H-523_BBU_mecl-2013WP-NS-0.out
CHNL# 140: [VOLT199240 [BWATER A230.00]]
CHNL# 139: [VOLT199200 [BRUSHY 230.00]]
CHNL# 138: [VOLT199130 [ONSLOW 230.00]]
CHNL# 137: [VOLT199050 [HASTINGS230.00]]
CHNL# 136: [VOLT199044 [PT.ACONI230.00]]
CHNL# 135: [VOLT199000 [LINGAN 230.00]]
1.2000
0.70000
0.0
1.0000
2.0000
3.0000
4.0000
5.0000
6.0000
7.0000
8.0000
9.0000
10.000
TIME (SECONDS)
THU, JAN 29 2009 15:52
230KV BUS VOLTS

2013 WINTER PEAK STORA MIN
NS-NB=0; NB-NE=500; CBX=732; ONI=961 ONS=851
1 PHASE FAULT ON L5041 AT 91H OPENS FROM 99H IN 9 CYCLE
91H-523 BREAKER FAILS NO BBU INSTALLED; TC 1 OFF
FILE: c108b-91H-523_BBU_mecl-2013WP-NS-0.out
CHNL# 217: [L6533MW]
CHNL# 215: [L6503MW]
CHNL# 197: [L8003MW]
CHNL# 195: [L8004MW]
CHNL# 193: [L8001MW]
CHNL# 221: [L3001MW]
250.00
-250.0
500.00
0.0
1000.0
-1000.
0.0
1.0000
2.0000
3.0000
4.0000
5.0000
6.0000
7.0000
8.0000
9.0000
10.000
TIME (SECONDS)
THU, JAN 29 2009 15:52
LINE FLOW MW

2013 WINTER PEAK STORA MIN
NS-NB=0; NB-NE=500; CBX=732; ONI=961 ONS=851
1 PHASE FAULT ON L5041 AT 91H OPENS FROM 99H IN 9 CYCLE
91H-523 BREAKER FAILS NO BBU INSTALLED; TC 1 OFF
FILE: c108b-91H-523_BBU_mecl-2013WP-NS-0.out
CHNL# 154: [IR141-DIGBYH69.0 VOLTS]
CHNL# 153: [IR137-STATIG25.0 VOLTS]
CHNL# 152: [IR114-GLENDH138.0 VOLTS]
CHNL# 151: [IR84-DALHOHV230.0 VOLTS]
CHNL# 150: [IR82 NUTBHV69.0 VOLTS]
CHNL# 149: [IR45 AMHERTP138.0 VOLTS]
1.2000
0.70000
0.0
1.0000
2.0000
3.0000
4.0000
5.0000
6.0000
7.0000
8.0000
9.0000
10.000
TIME (SECONDS)
THU, JAN 29 2009 15:52
WIND BUS VOLTS

2013 WINTER PEAK STORA MIN
NS-NB=0; NB-NE=500; CBX=732; ONI=961 ONS=851
1 PHASE FAULT ON L5041 AT 91H OPENS FROM 99H IN 9 CYCLE
91H-523 BREAKER FAILS NO BBU INSTALLED; TC1 AND 2 OFF
FILE: c108c-91H-523_BBU_mecl-2013WP-NS-0.out
CHNL#S 20.4: [ANGL199169 [TUFTCV3 14.400] [3]] [ANGL156661 [DARL G1 22.000] [1]] 100.00 -100.0
CHNL#S 17.4: [ANGL199086 [TRENTON613.800] [6]] [ANGL156661 [DARL G1 22.000] [1]] 100.00 -100.0
CHNL#S 16.4: [ANGL199085 [TRENTN5 13.800] [5]] [ANGL156661 [DARL G1 22.000] [1]] 100.00 -100.0
CHNL#S 15.4: [ANGL199061 [TMP1 STO13.800] [1]] [ANGL156661 [DARL G1 22.000] [1]] 50.000 -150.0
CHNL#S 13.4: [ANGL199043 [ACONIG1 20.000] [1]] [ANGL156661 [DARL G1 22.000] [1]] 100.00 -100.0
CHNL#S 11.4: [ANGL199001 [LINGAN1 14.400] [1]] [ANGL156661 [DARL G1 22.000] [1]] 100.00 -100.0
0.0 1.0000 2.0000 3.0000 4.0000 5.0000 6.0000 7.0000 8.0000 9.0000 10.000
TIME (SECONDS)
THU, JAN 29 2009 15:52
NS ANGLE

2013 WINTER PEAK STORA MIN
NS-NB=0; NB-NE=500; CBX=732; ONI=961 ONS=851
1 PHASE FAULT ON L5041 AT 91H OPENS FROM 99H IN 9 CYCLE
91H-523 BREAKER FAILS NO BBU INSTALLED; TC1 AND 2 OFF
FILE: c108c-91H-523_BBU_mecl-2013WP-NS-0.out
CHNL#S 10.4: [ANGL190472 [BLLDNG2 19.000] [1]] [ANGL156661 [DARL G1 22.000] [1]] 100.00 -100.0
CHNL#S 6.4: [ANGL190456 [LEPRG1 26.000] [1]] [ANGL156661 [DARL G1 22.000] [1]] 100.00 -100.0
CHNL#S 5.4: [ANGL190450 [MACTG1 13.800] [1]] [ANGL156661 [DARL G1 22.000] [1]] 100.00 -100.0
CHNL#S 3.4: [ANGL126652 [RAV 3 22.000] [1]] [ANGL156661 [DARL G1 22.000] [1]] 100.00 -100.0
CHNL#S 2.4: [ANGL101063 [MYST G7 22.000] [1]] [ANGL156661 [DARL G1 22.000] [1]] 100.00 -100.0
CHNL#S 7.4: [ANGL190457 [C.CVG1 19.000] [1]] [ANGL156661 [DARL G1 22.000] [1]] 100.00 -100.0
0.0 1.0000 2.0000 3.0000 4.0000 5.0000 6.0000 7.0000 8.0000 9.0000 10.000
TIME (SECONDS)
THU, JAN 29 2009 15:52
"NE,NY,NB ANGLE"

2013 WINTER PEAK STORA MIN
NS-NB=0; NB-NE=500; CBX=732; ONI=961 ONS=851
1 PHASE FAULT ON L5041 AT 91H OPENS FROM 99H IN 9 CYCLE
91H-523 BREAKER FAILS NO BBU INSTALLED; TC1 AND 2 OFF
FILE: c108c-91H-523_BBU_mecl-2013WP-NS-0.out
CHNL# 59: [POWER199169 [TUFTCV3 14.400] [3]] 2.5000 0.0
CHNL# 56: [POWER199086 [TRENTON613.800] [6]] 2.5000 0.0
CHNL# 55: [POWER199085 [TRENTN5 13.800] [5]] 2.5000 0.0
CHNL# 54: [POWER199061 [TMP1 STO13.800] [1]] 1.0000 -1.500
CHNL# 52: [POWER199043 [ACONIG1 20.000] [1]] 2.5000 0.0
CHNL# 50: [POWER199001 [LINGAN1 14.400] [1]] 2.5000 0.0
0.0 1.0000 2.0000 3.0000 4.0000 5.0000 6.0000 7.0000 8.0000 9.0000 10.000
TIME (SECONDS)
THU, JAN 29 2009 15:52
NS MW

2013 WINTER PEAK STORA MIN
NS-NB=0; NB-NE=500; CBX=732; ONI=961 ONS=851
1 PHASE FAULT ON L5041 AT 91H OPENS FROM 99H IN 9 CYCLE
91H-523 BREAKER FAILS NO BBU INSTALLED; TC1 AND 2 OFF
FILE: c108c-91H-523_BBU_mecl-2013WP-NS-0.out
CHNL# 49: [POWER190472 [BLLDNG2 19.000] [1]] 7.0000 2.0000
CHNL# 45: [POWER190456 [LEPRG1 26.000] [1]] 9.0000 4.0000
CHNL# 44: [POWER190450 [MACTG1 13.800] [1]] 5.0000 0.0
CHNL# 42: [POWER126652 [RAV 3 22.000] [1]] 5.0000 0.0
CHNL# 41: [POWER101063 [MYST G7 22.000] [1]] 6.5000 1.0000
CHNL# 46: [POWER190457 [C.CVG1 19.000] [1]] 5.0000 0.0
0.0 1.0000 2.0000 3.0000 4.0000 5.0000 6.0000 7.0000 8.0000 9.0000 10.000
TIME (SECONDS)
THU, JAN 29 2009 15:52
"NE,NY,NB POWER"

2013 WINTER PEAK STORA MIN
NS-NB=0; NB-NE=500; CBX=732; ONI=961 ONS=851
1 PHASE FAULT ON L5041 AT 91H OPENS FROM 99H IN 9 CYCLE
91H-523 BREAKER FAILS NO BBU INSTALLED; TC1 AND 2 OFF
FILE: c108c-91H-523_BBU_mecl-2013WP-NS-0.out
CHNL# 119: [VARS IR141-DIGBY]
CHNL# 118: [VARS IR137-STATIA]
CHNL# 117: [VARS IR114-GLENDHU]
CHNL# 116: [VARS IR84-DALHOUSIE]
CHNL# 115: [VARS IR82_NUTTBY]
CHNL# 114: [VARS IR45_AMHERST]
0.50000
-0.5000
0.0
1.0000
2.0000
3.0000
4.0000
5.0000
6.0000
7.0000
8.0000
9.0000
10.000
TIME (SECONDS)
THU, JAN 29 2009 15:52
NS WIND MV

2013 WINTER PEAK STORA MIN
NS-NB=0; NB-NE=500; CBX=732; ONI=961 ONS=851
1 PHASE FAULT ON L5041 AT 91H OPENS FROM 99H IN 9 CYCLE
91H-523 BREAKER FAILS NO BBU INSTALLED; TC1 AND 2 OFF
FILE: c108c-91H-523_BBU_mecl-2013WP-NS-0.out
CHNL# 79: [POWER IR141-DIGBY]
CHNL# 78: [POWER IR137-STATIA]
CHNL# 77: [POWER IR114-GLENDHU]
CHNL# 76: [POWER IR84-DALHOUSIE]
CHNL# 75: [POWER IR82_NUTTBY]
CHNL# 74: [POWER IR45_AMHERST]
1.0000
0.0
1.0000
2.0000
3.0000
4.0000
5.0000
6.0000
7.0000
8.0000
9.0000
10.000
TIME (SECONDS)
THU, JAN 29 2009 15:52
NS WIND MW

2013 WINTER PEAK STORA MIN
NS-NB=0; NB-NE=500; CBX=732; ONI=961 ONS=851
1 PHASE FAULT ON L5041 AT 91H OPENS FROM 99H IN 9 CYCLE
91H-523 BREAKER FAILS NO BBU INSTALLED; TC1 AND 2 OFF
FILE: c108c-91H-523_BBU_mecl-2013WP-NS-0.out
CHNL# 133: [VOLT199125 IONSLOW 345.00]
CHNL# 132: [VOLT199120 [HOPEWELL 345.00]
CHNL# 131: [VOLT199045 [WOODBINE345.00]
CHNL# 130: [VOLT190320 [SALBRY 345.00]
CHNL# 128: [VOLT190004 [KESWICK 345.00]
CHNL# 127: [VOLT 70002 [ORRINGTN345.00]
1.1000
0.90000
0.0
1.0000
2.0000
3.0000
4.0000
5.0000
6.0000
7.0000
8.0000
9.0000
10.000
TIME (SECONDS)
THU, JAN 29 2009 15:52
"345KV VOLTAGE"

2013 WINTER PEAK STORA MIN
NS-NB=0; NB-NE=500; CBX=732; ONI=961 ONS=851
1 PHASE FAULT ON L5041 AT 91H OPENS FROM 99H IN 9 CYCLE
91H-523 BREAKER FAILS NO BBU INSTALLED; TC1 AND 2 OFF
FILE: c108c-91H-523_BBU_mecl-2013WP-NS-0.out
CHNL# 125: 60*(1+[FREQ199125 [ONSLOW 345.00])
CHNL# 124: 60*(1+[FREQ199120 [HOPEWELL 345.00])
CHNL# 123: 60*(1+[FREQ199045 [WOODBINE345.00])
CHNL# 122: 60*(1+[FREQ190320 [SALBRY 345.00])
CHNL# 121: 60*(1+[FREQ190197 [C.COVE 345.00])
CHNL# 120: 60*(1+[FREQ 70002 [ORRINGTN345.00])
60.500
59.500
0.0
1.0000
2.0000
3.0000
4.0000
5.0000
6.0000
7.0000
8.0000
9.0000
10.000
TIME (SECONDS)
THU, JAN 29 2009 15:52
FREQUENCY HZ

2013 WINTER PEAK STORA MIN
NS-NB=0; NB-NE=500; CBX=732; ONI=961 ONS=851
1 PHASE FAULT ON L5041 AT 91H OPENS FROM 99H IN 9 CYCLE
91H-523 BREAKER FAILS NO BBU INSTALLED; TC1 AND 2 OFF
FILE: c108c-91H-523_BBU_nrecl-2013WP-NS-0.out
CHNL# 146: [VOLT199280 TUSKET A138.00]
CHNL# 145: [VOLT199193 [1H-WAS 138.00]
CHNL# 144: [VOLT199165 [TUFTCOVE138.00]
CHNL# 143: [VOLT199138: [SPRNGHIL138.00]
CHNL# 142: [VOLT199090 [50N-TREN138.00]
CHNL# 141: [VOLT199051 [HASTINGS138.00]
1.2000
0.70000
0.0
1.0000
2.0000
3.0000
4.0000
5.0000
6.0000
7.0000
8.0000
9.0000
10.000
TIME (SECONDS)
THU, JAN 29 2009 15:52
138KV BUS VOLTS

2013 WINTER PEAK STORA MIN
NS-NB=0; NB-NE=500; CBX=732; ONI=961 ONS=851
1 PHASE FAULT ON L5041 AT 91H OPENS FROM 99H IN 9 CYCLE
91H-523 BREAKER FAILS NO BBU INSTALLED; TC1 AND 2 OFF
FILE: c108c-91H-523_BBU_nrecl-2013WP-NS-0.out
CHNL# 140: [VOLT199240 [BWATER A230.00]
CHNL# 139: [VOLT199200 [BRUSHY 230.00]
CHNL# 138: [VOLT199130 [ONSLOW 230.00]
CHNL# 137: [VOLT199050 [HASTINGS230.00]
CHNL# 136: [VOLT199044 [PT.ACONI230.00]
CHNL# 135: [VOLT199000 [LINGAN 230.00]
1.2000
0.70000
0.0
1.0000
2.0000
3.0000
4.0000
5.0000
6.0000
7.0000
8.0000
9.0000
10.000
TIME (SECONDS)
THU, JAN 29 2009 15:52
230KV BUS VOLTS

2013 WINTER PEAK STORA MIN
NS-NB=0; NB-NE=500; CBX=732; ONI=961 ONS=851
1 PHASE FAULT ON L5041 AT 91H OPENS FROM 99H IN 9 CYCLE
91H-523 BREAKER FAILS NO BBU INSTALLED; TC1 AND 2 OFF
FILE: c108c-91H-523_BBU_nrecl-2013WP-NS-0.out
CHNL# 217: [L6533MW]
CHNL# 215: [L6503MW]
CHNL# 197: [L8003MW]
CHNL# 195: [L8004MW]
CHNL# 193: [L8001MW]
CHNL# 221: [L3001MW]
250.00
-250.0
500.00
0.0
1000.0
-1000.
0.0
1.0000
2.0000
3.0000
4.0000
5.0000
6.0000
7.0000
8.0000
9.0000
10.000
TIME (SECONDS)
THU, JAN 29 2009 15:52
LINE FLOW MW

2013 WINTER PEAK STORA MIN
NS-NB=0; NB-NE=500; CBX=732; ONI=961 ONS=851
1 PHASE FAULT ON L5041 AT 91H OPENS FROM 99H IN 9 CYCLE
91H-523 BREAKER FAILS NO BBU INSTALLED; TC1 AND 2 OFF
FILE: c108c-91H-523_BBU_nrecl-2013WP-NS-0.out
CHNL# 154: [IR141-DIGBYH69.0 VOLTS]
CHNL# 153: [IR137-STATIG25.0 VOLTS]
CHNL# 152: [IR114-GLENDH138.0 VOLTS]
CHNL# 151: [IR84-DALHOHV230.0 VOLTS]
CHNL# 150: [IR82 NUTBHV69.0 VOLTS]
CHNL# 149: [IR45 AMHERTP138.0 VOLTS]
1.2000
0.70000
0.0
1.0000
2.0000
3.0000
4.0000
5.0000
6.0000
7.0000
8.0000
9.0000
10.000
TIME (SECONDS)
THU, JAN 29 2009 15:52
WIND BUS VOLTS

2013 WINTER PEAK STORA MIN
NS-NB=0; NB-NE=500; CBX=732; ONI=961 ONS=851
1 PHASE FAULT ON L5041 AT 91H OPENS FROM 99H IN 9 CYCLE
91H-523 BREAKER FAILS NO BBU INSTALLED; ALL TC OFF
FILE: c108d-91H-523_BBU_mecl-2013WP-NS-0.out
CHNL# 20: [ANGL199169 [TUFTCV3 14.400] [3]] [ANGL156661 [DARL G1 22.000] [1]
CHNL# 17: [ANGL199086 [TRENTON613.800] [6]] [ANGL156661 [DARL G1 22.000] [1]
CHNL# 16: [ANGL199085 [TRENTN5 13.800] [5]] [ANGL156661 [DARL G1 22.000] [1]
CHNL# 15: [ANGL199061 [TMP1 STO13.800] [1]] [ANGL156661 [DARL G1 22.000] [1]
CHNL# 13: [ANGL199043 [ACONIG1 20.000] [1]] [ANGL156661 [DARL G1 22.000] [1]
CHNL# 11: [ANGL199001 [LINGAN1 14.400] [1]] [ANGL156661 [DARL G1 22.000] [1]
THU, JAN 29 2009 15:52
TIME (SECONDS)
NS ANGLE

2013 WINTER PEAK STORA MIN
NS-NB=0; NB-NE=500; CBX=732; ONI=961 ONS=851
1 PHASE FAULT ON L5041 AT 91H OPENS FROM 99H IN 9 CYCLE
91H-523 BREAKER FAILS NO BBU INSTALLED; ALL TC OFF
FILE: c108d-91H-523_BBU_mecl-2013WP-NS-0.out
CHNL# 10: [ANGL190472 [BLLDNG2 19.000] [1]] [ANGL156661 [DARL G1 22.000] [1]
CHNL# 6: [ANGL190456 [LEPRG1 26.000] [1]] [ANGL156661 [DARL G1 22.000] [1]
CHNL# 5: [ANGL190450 [MACTG1 13.800] [1]] [ANGL156661 [DARL G1 22.000] [1]
CHNL# 3: [ANGL126652 [RAV 3 22.000] [1]] [ANGL156661 [DARL G1 22.000] [1]
CHNL# 2: [ANGL101063 [MYST G7 22.000] [1]] [ANGL156661 [DARL G1 22.000] [1]
CHNL# 7: [ANGL190457 [C.CVG1 19.000] [1]] [ANGL156661 [DARL G1 22.000] [1]
THU, JAN 29 2009 15:52
TIME (SECONDS)
"NE,NY,NB ANGLE"

2013 WINTER PEAK STORA MIN
NS-NB=0; NB-NE=500; CBX=732; ONI=961 ONS=851
1 PHASE FAULT ON L5041 AT 91H OPENS FROM 99H IN 9 CYCLE
91H-523 BREAKER FAILS NO BBU INSTALLED; ALL TC OFF
FILE: c108d-91H-523_BBU_mecl-2013WP-NS-0.out
CHNL# 59: [POWER199169 [TUFTCV3 14.400] [3]]
CHNL# 56: [POWER199086 [TRENTON613.800] [6]]
CHNL# 55: [POWER199085 [TRENTN5 13.800] [5]]
CHNL# 54: [POWER199061 [TMP1 STO13.800] [1]]
CHNL# 52: [POWER199043 [ACONIG1 20.000] [1]]
CHNL# 50: [POWER199001 [LINGAN1 14.400] [1]]
THU, JAN 29 2009 15:52
TIME (SECONDS)
NS MW

2013 WINTER PEAK STORA MIN
NS-NB=0; NB-NE=500; CBX=732; ONI=961 ONS=851
1 PHASE FAULT ON L5041 AT 91H OPENS FROM 99H IN 9 CYCLE
91H-523 BREAKER FAILS NO BBU INSTALLED; ALL TC OFF
FILE: c108d-91H-523_BBU_mecl-2013WP-NS-0.out
CHNL# 49: [POWER190472 [BLLDNG2 19.000] [1]]
CHNL# 45: [POWER190456 [LEPRG1 26.000] [1]]
CHNL# 44: [POWER190450 [MACTG1 13.800] [1]]
CHNL# 42: [POWER126652 [RAV 3 22.000] [1]]
CHNL# 41: [POWER101063 [MYST G7 22.000] [1]]
CHNL# 46: [POWER190457 [C.CVG1 19.000] [1]]
THU, JAN 29 2009 15:52
TIME (SECONDS)
"NE,NY,NB POWER"

2013 WINTER PEAK STORA MIN
NS-NB=0; NB-NE=500; CBX=732; ONI=961 ONS=851
1 PHASE FAULT ON L5041 AT 91H OPENS FROM 99H IN 9 CYCLE
91H-523 BREAKER FAILS NO BBU INSTALLED; ALL TC OFF
FILE: c108d-91H-523_BBU_mecl-2013WP-NS-0.out
CHNL# 119: [VARS IR141-DIGBY]
CHNL# 118: [VARS IR137-STATIA]
CHNL# 117: [VARS IR114-GLENDHU]
CHNL# 116: [VARS IR84-DALHOUSIE]
CHNL# 115: [VARS IR82_NUTTBY]
CHNL# 114: [VARS IR45_AMHERST]
0.50000
-0.5000
0.0
1.0000
2.0000
3.0000
4.0000
5.0000
6.0000
7.0000
8.0000
9.0000
10.000
TIME (SECONDS)
THU, JAN 29 2009 15:52
NS WIND MV

2013 WINTER PEAK STORA MIN
NS-NB=0; NB-NE=500; CBX=732; ONI=961 ONS=851
1 PHASE FAULT ON L5041 AT 91H OPENS FROM 99H IN 9 CYCLE
91H-523 BREAKER FAILS NO BBU INSTALLED; ALL TC OFF
FILE: c108d-91H-523_BBU_mecl-2013WP-NS-0.out
CHNL# 79: [POWER IR141-DIGBY]
CHNL# 78: [POWER IR137-STATIA]
CHNL# 77: [POWER IR114-GLENDHU]
CHNL# 76: [POWER IR84-DALHOUSIE]
CHNL# 75: [POWER IR82_NUTTBY]
CHNL# 74: [POWER IR45_AMHERST]
1.0000
0.0
1.0000
2.0000
3.0000
4.0000
5.0000
6.0000
7.0000
8.0000
9.0000
10.000
TIME (SECONDS)
THU, JAN 29 2009 15:52
NS WIND MW

2013 WINTER PEAK STORA MIN
NS-NB=0; NB-NE=500; CBX=732; ONI=961 ONS=851
1 PHASE FAULT ON L5041 AT 91H OPENS FROM 99H IN 9 CYCLE
91H-523 BREAKER FAILS NO BBU INSTALLED; ALL TC OFF
FILE: c108d-91H-523_BBU_mecl-2013WP-NS-0.out
CHNL# 133: [VOLT199125 [ONSLOW 345.00]]
CHNL# 132: [VOLT199120 [HOPEWELL 345.00]]
CHNL# 131: [VOLT199045 [WOODBINE345.00]]
CHNL# 130: [VOLT190320 [SALBRY 345.00]]
CHNL# 128: [VOLT190004 [KESWICK 345.00]]
CHNL# 127: [VOLT 70002 [ORRINGTN345.00]]
0.90000
1.1000
0.0
1.0000
2.0000
3.0000
4.0000
5.0000
6.0000
7.0000
8.0000
9.0000
10.000
TIME (SECONDS)
THU, JAN 29 2009 15:52
"345KV VOLTAGE"

2013 WINTER PEAK STORA MIN
NS-NB=0; NB-NE=500; CBX=732; ONI=961 ONS=851
1 PHASE FAULT ON L5041 AT 91H OPENS FROM 99H IN 9 CYCLE
91H-523 BREAKER FAILS NO BBU INSTALLED; ALL TC OFF
FILE: c108d-91H-523_BBU_mecl-2013WP-NS-0.out
CHNL# 125: 60*(1+[FREQ199125 [ONSLOW 345.00]])
CHNL# 124: 60*(1+[FREQ199120 [HOPEWELL 345.00]])
CHNL# 123: 60*(1+[FREQ199045 [WOODBINE345.00]])
CHNL# 122: 60*(1+[FREQ190320 [SALBRY 345.00]])
CHNL# 121: 60*(1+[FREQ190197 [C.COVE 345.00]])
CHNL# 120: 60*(1+[FREQ 70002 [ORRINGTN345.00]])
60.500
59.500
0.0
1.0000
2.0000
3.0000
4.0000
5.0000
6.0000
7.0000
8.0000
9.0000
10.000
TIME (SECONDS)
THU, JAN 29 2009 15:52
FREQUENCY HZ

2013 WINTER PEAK STORA MIN
NS-NB=0; NB-NE=500; CBX=732; ONI=961 ONS=851
1 PHASE FAULT ON L5041 AT 91H OPENS FROM 99H IN 9 CYCLE
91H-523 BREAKER FAILS NO BBU INSTALLED; ALL TC OFF
FILE: c108d-91H-523_BBU_mecl-2013WP-NS-0.out
CHNL# 146: [VOLT199280 [TUSKET A138.00]]
CHNL# 145: [VOLT199193 [1H-WAS 138.00]]
CHNL# 144: [VOLT199165 [TUFTCOVE138.00]]
CHNL# 143: [VOLT199138: [SPRNGHIL138.00]]
CHNL# 142: [VOLT199090 [50N-TREN138.00]]
CHNL# 141: [VOLT199051 [HASTINGS138.00]]
1.2000
0.70000
0.0
1.0000
2.0000
3.0000
4.0000
5.0000
6.0000
7.0000
8.0000
9.0000
10.000
TIME (SECONDS)
THU, JAN 29 2009 15:52
138KV BUS VOLTS

2013 WINTER PEAK STORA MIN
NS-NB=0; NB-NE=500; CBX=732; ONI=961 ONS=851
1 PHASE FAULT ON L5041 AT 91H OPENS FROM 99H IN 9 CYCLE
91H-523 BREAKER FAILS NO BBU INSTALLED; ALL TC OFF
FILE: c108d-91H-523_BBU_mecl-2013WP-NS-0.out
CHNL# 140: [VOLT199240 [BWATER A230.00]]
CHNL# 139: [VOLT199200 [BRUSHY 230.00]]
CHNL# 138: [VOLT199130 [ONSLOW 230.00]]
CHNL# 137: [VOLT199050 [HASTINGS230.00]]
CHNL# 136: [VOLT199044 [PT.ACONI230.00]]
CHNL# 135: [VOLT199000 [LINGAN 230.00]]
1.2000
0.70000
0.0
1.0000
2.0000
3.0000
4.0000
5.0000
6.0000
7.0000
8.0000
9.0000
10.000
TIME (SECONDS)
THU, JAN 29 2009 15:52
230KV BUS VOLTS

2013 WINTER PEAK STORA MIN
NS-NB=0; NB-NE=500; CBX=732; ONI=961 ONS=851
1 PHASE FAULT ON L5041 AT 91H OPENS FROM 99H IN 9 CYCLE
91H-523 BREAKER FAILS NO BBU INSTALLED; ALL TC OFF
FILE: c108d-91H-523_BBU_mecl-2013WP-NS-0.out
CHNL# 217: [L6533MW]
CHNL# 215: [L6503MW]
CHNL# 197: [L8003MW]
CHNL# 195: [L8004MW]
CHNL# 193: [L8001MW]
CHNL# 221: [L3001MW]
250.00
500.00
1000.0
0.0
-250.0
-1000.
0.0
1.0000
2.0000
3.0000
4.0000
5.0000
6.0000
7.0000
8.0000
9.0000
10.000
TIME (SECONDS)
THU, JAN 29 2009 15:52
LINE FLOW MW

2013 WINTER PEAK STORA MIN
NS-NB=0; NB-NE=500; CBX=732; ONI=961 ONS=851
1 PHASE FAULT ON L5041 AT 91H OPENS FROM 99H IN 9 CYCLE
91H-523 BREAKER FAILS NO BBU INSTALLED; ALL TC OFF
FILE: c108d-91H-523_BBU_mecl-2013WP-NS-0.out
CHNL# 154: [IR141-DIGBYH69.0 VOLTS]
CHNL# 153: [IR137-STATIG25.0 VOLTS]
CHNL# 152: [IR114-GLENDH138.0 VOLTS]
CHNL# 151: [IR84-DALHOHV230.0 VOLTS]
CHNL# 150: [IR82 NUTBHV69.0 VOLTS]
CHNL# 149: [IR45 AMHERTP138.0 VOLTS]
1.2000
0.70000
0.0
1.0000
2.0000
3.0000
4.0000
5.0000
6.0000
7.0000
8.0000
9.0000
10.000
TIME (SECONDS)
THU, JAN 29 2009 15:52
WIND BUS VOLTS

2013 WINTER PEAK STORA MIN
NS-NB=0; NB-NE=500; CBX=732; ONI=961 ONS=851
1 PHASE FAULT ON 101H-B62 101H-600 BREAKER FAILS
BBU OPERTES IN 15 CYCLES ENTIRE BUS NO RECLOSING
FILE: c109-101h-600_BBU_nrecl-2013WP-NS-0.out
CHNL#S 20.4: [ANGL199169 [TUFTCV3 14.400] [3]] [ANGL156661 [DARL G1 22.000] [1
CHNL#S 17.4: [ANGL199086 [TRENTON613.800] [6]] [ANGL156661 [DARL G1 22.000] [1
CHNL#S 16.4: [ANGL199085 [TRENTN5 13.800] [5]] [ANGL156661 [DARL G1 22.000] [1
CHNL#S 15.4: [ANGL199061 [TMP1 STO13.800] [1]] [ANGL156661 [DARL G1 22.000] [1
CHNL#S 13.4: [ANGL199043 [ACONIG1 20.000] [1]] [ANGL156661 [DARL G1 22.000] [1
CHNL#S 11.4: [ANGL199001 [LINGAN1 14.400] [1]] [ANGL156661 [DARL G1 22.000] [1
100.00
-100.0
0.0
1.0000
2.0000
3.0000
4.0000
5.0000
6.0000
7.0000
8.0000
9.0000
10.000
TIME (SECONDS)
THU, JAN 29 2009 15:52
NS ANGLE

2013 WINTER PEAK STORA MIN
NS-NB=0; NB-NE=500; CBX=732; ONI=961 ONS=851
1 PHASE FAULT ON 101H-B62 101H-600 BREAKER FAILS
BBU OPERTES IN 15 CYCLES ENTIRE BUS NO RECLOSING
FILE: c109-101h-600_BBU_nrecl-2013WP-NS-0.out
CHNL#S 10.4: [ANGL190472 [BLLDNG2 19.000] [1]] [ANGL156661 [DARL G1 22.000] [1
CHNL#S 6.4: [ANGL190456 [LEPRG1 26.000] [1]] [ANGL156661 [DARL G1 22.000] [1
CHNL#S 5.4: [ANGL190450 [MACTG1 13.800] [1]] [ANGL156661 [DARL G1 22.000] [1
CHNL#S 3.4: [ANGL126652 [RAV 3 22.000] [1]] [ANGL156661 [DARL G1 22.000] [1
CHNL#S 2.4: [ANGL101063 [MYST G7 22.000] [1]] [ANGL156661 [DARL G1 22.000] [1
CHNL#S 7.4: [ANGL190457 [C.CVG1 19.000] [1]] [ANGL156661 [DARL G1 22.000] [1
100.00
-100.0
0.0
1.0000
2.0000
3.0000
4.0000
5.0000
6.0000
7.0000
8.0000
9.0000
10.000
TIME (SECONDS)
THU, JAN 29 2009 15:52
"NE,NY,NB ANGLE"

2013 WINTER PEAK STORA MIN
NS-NB=0; NB-NE=500; CBX=732; ONI=961 ONS=851
1 PHASE FAULT ON 101H-B62 101H-600 BREAKER FAILS
BBU OPERTES IN 15 CYCLES ENTIRE BUS NO RECLOSING
FILE: c109-101h-600_BBU_nrecl-2013WP-NS-0.out
CHNL# 59: [POWR199169 [TUFTCV3 14.400] [3]]
CHNL# 56: [POWR199086 [TRENTON613.800] [6]]
CHNL# 55: [POWR199085 [TRENTN5 13.800] [5]]
CHNL# 54: [POWR199061 [TMP1 STO13.800] [1]]
CHNL# 52: [POWR199043 [ACONIG1 20.000] [1]]
CHNL# 50: [POWR199001 [LINGAN1 14.400] [1]]
2.5000
1.0000
-1.500
0.0
1.0000
2.0000
3.0000
4.0000
5.0000
6.0000
7.0000
8.0000
9.0000
10.000
TIME (SECONDS)
THU, JAN 29 2009 15:52
NS MW

2013 WINTER PEAK STORA MIN
NS-NB=0; NB-NE=500; CBX=732; ONI=961 ONS=851
1 PHASE FAULT ON 101H-B62 101H-600 BREAKER FAILS
BBU OPERTES IN 15 CYCLES ENTIRE BUS NO RECLOSING
FILE: c109-101h-600_BBU_nrecl-2013WP-NS-0.out
CHNL# 49: [POWER190472 [BLLDNG2 19.000] [1]]
CHNL# 45: [POWER190456 [LEPRG1 26.000] [1]]
CHNL# 44: [POWER190450 [MACTG1 13.800] [1]]
CHNL# 42: [POWER126652 [RAV 3 22.000] [1]]
CHNL# 41: [POWER101063 [MYST G7 22.000] [1]]
CHNL# 46: [POWER190457 [C.CVG1 19.000] [1]]
7.0000
9.0000
5.0000
5.0000
6.5000
5.0000
4.0000
0.0
0.0
1.0000
0.0
1.0000
2.0000
3.0000
4.0000
5.0000
6.0000
7.0000
8.0000
9.0000
10.000
TIME (SECONDS)
THU, JAN 29 2009 15:52
"NE,NY,NB POWER"

2013 WINTER PEAK STORA MIN
NS-NB=0; NB-NE=500; CBX=732; ONI=961 ONS=851
1 PHASE FAULT ON 101H-B62 101H-600 BREAKER FAILS
BBU OPERTES IN 15 CYCLES ENTIRE BUS NO RECLOSING
FILE: c109-101h-600_BBU_nrecl-2013WP-NS-0.out
CHNL# 119: [VARS IR141-DIGBY]
CHNL# 118: [VARS IR137-STATIA]
CHNL# 117: [VARS IR114-GLENDHU]
CHNL# 116: [VARS IR84-DALHOUSIE]
CHNL# 115: [VARS IR82_NUTTBY]
CHNL# 114: [VARS IR45_AMHERST]
TIME (SECONDS)
THU, JAN 29 2009 15:52
NS WIND MV

2013 WINTER PEAK STORA MIN
NS-NB=0; NB-NE=500; CBX=732; ONI=961 ONS=851
1 PHASE FAULT ON 101H-B62 101H-600 BREAKER FAILS
BBU OPERTES IN 15 CYCLES ENTIRE BUS NO RECLOSING
FILE: c109-101h-600_BBU_nrecl-2013WP-NS-0.out
CHNL# 79: [POWER IR141-DIGBY]
CHNL# 78: [POWER IR137-STATIA]
CHNL# 77: [POWER IR114-GLENDHU]
CHNL# 76: [POWER IR84-DALHOUSIE]
CHNL# 75: [POWER IR82_NUTTBY]
CHNL# 74: [POWER IR45_AMHERST]
TIME (SECONDS)
THU, JAN 29 2009 15:52
NS WIND MW

2013 WINTER PEAK STORA MIN
NS-NB=0; NB-NE=500; CBX=732; ONI=961 ONS=851
1 PHASE FAULT ON 101H-B62 101H-600 BREAKER FAILS
BBU OPERTES IN 15 CYCLES ENTIRE BUS NO RECLOSING
FILE: c109-101h-600_BBU_nrecl-2013WP-NS-0.out
CHNL# 133: [VOLT199125 [ONSLOW 345.00]]
CHNL# 132: [VOLT199120 [HOPEWELL 345.00]]
CHNL# 131: [VOLT199045 [WOODBINE345.00]]
CHNL# 130: [VOLT190320 [SALBRY 345.00]]
CHNL# 128: [VOLT190004 [KESWICK 345.00]]
CHNL# 127: [VOLT 70002 [ORRINGTN345.00]]
TIME (SECONDS)
THU, JAN 29 2009 15:52
"345KV VOLTAGE"

2013 WINTER PEAK STORA MIN
NS-NB=0; NB-NE=500; CBX=732; ONI=961 ONS=851
1 PHASE FAULT ON 101H-B62 101H-600 BREAKER FAILS
BBU OPERTES IN 15 CYCLES ENTIRE BUS NO RECLOSING
FILE: c109-101h-600_BBU_nrecl-2013WP-NS-0.out
CHNL# 125: 60*(1+[FREQ199125 [ONSLOW 345.00]])
CHNL# 124: 60*(1+[FREQ199120 [HOPEWELL 345.00]])
CHNL# 123: 60*(1+[FREQ199045 [WOODBINE345.00]])
CHNL# 122: 60*(1+[FREQ190320 [SALBRY 345.00]])
CHNL# 121: 60*(1+[FREQ190197 [C.COVE 345.00]])
CHNL# 120: 60*(1+[FREQ 70002 [ORRINGTN345.00]])
TIME (SECONDS)
THU, JAN 29 2009 15:52
FREQUENCY HZ

2013 WINTER PEAK STORA MIN
NS-NB=0; NB-NE=500; CBX=732; ONI=961 ONS=851
1 PHASE FAULT ON 101H-B62 101H-600 BREAKER FAILS
BBU OPERTES IN 15 CYCLES ENTIRE BUS NO RECLOSING
FILE: c109-101h-600_BBU_nrecl-2013WP-NS-0.out
CHNL# 146: [VOLT199280 [TUSKET A138.00]]
CHNL# 145: [VOLT199193 [1H-WAS 138.00]]
CHNL# 144: [VOLT199165 [TUFTCOVE138.00]]
CHNL# 143: [VOLT199138 [SPRNGHIL138.00]]
CHNL# 142: [VOLT199090 [50N-TREN138.00]]
CHNL# 141: [VOLT199051 [HASTINGS138.00]]
1.2000
0.70000
0.0
1.0000
2.0000
3.0000
4.0000
5.0000
6.0000
7.0000
8.0000
9.0000
10.000
TIME (SECONDS)
THU, JAN 29 2009 15:52
138KV BUS VOLTS

2013 WINTER PEAK STORA MIN
NS-NB=0; NB-NE=500; CBX=732; ONI=961 ONS=851
1 PHASE FAULT ON 101H-B62 101H-600 BREAKER FAILS
BBU OPERTES IN 15 CYCLES ENTIRE BUS NO RECLOSING
FILE: c109-101h-600_BBU_nrecl-2013WP-NS-0.out
CHNL# 140: [VOLT199240 [BWATER A230.00]]
CHNL# 139: [VOLT199200 [BRUSHY 230.00]]
CHNL# 138: [VOLT199130 [ONSLOW 230.00]]
CHNL# 137: [VOLT199050 [HASTINGS230.00]]
CHNL# 136: [VOLT199044 [PT.ACONI230.00]]
CHNL# 135: [VOLT199000 [LINGAN 230.00]]
1.2000
0.70000
0.0
1.0000
2.0000
3.0000
4.0000
5.0000
6.0000
7.0000
8.0000
9.0000
10.000
TIME (SECONDS)
THU, JAN 29 2009 15:52
230KV BUS VOLTS

2013 WINTER PEAK STORA MIN
NS-NB=0; NB-NE=500; CBX=732; ONI=961 ONS=851
1 PHASE FAULT ON 101H-B62 101H-600 BREAKER FAILS
BBU OPERTES IN 15 CYCLES ENTIRE BUS NO RECLOSING
FILE: c109-101h-600_BBU_nrecl-2013WP-NS-0.out
CHNL# 217: [L6533MW]
CHNL# 215: [L6503MW]
CHNL# 197: [L8003MW]
CHNL# 195: [L8004MW]
CHNL# 193: [L8001MW]
CHNL# 221: [L3001MW]
250.00
500.00
1000.0
0.0
-250.0
-1000.
0.70000
0.0
1.0000
2.0000
3.0000
4.0000
5.0000
6.0000
7.0000
8.0000
9.0000
10.000
TIME (SECONDS)
THU, JAN 29 2009 15:52
LINE FLOW MW

2013 WINTER PEAK STORA MIN
NS-NB=0; NB-NE=500; CBX=732; ONI=961 ONS=851
1 PHASE FAULT ON 101H-B62 101H-600 BREAKER FAILS
BBU OPERTES IN 15 CYCLES ENTIRE BUS NO RECLOSING
FILE: c109-101h-600_BBU_nrecl-2013WP-NS-0.out
CHNL# 154: [IR141-DIGBYH69.0 VOLTS]
CHNL# 153: [IR137-STATIG25.0 VOLTS]
CHNL# 152: [IR114-GLENDH138.0 VOLTS]
CHNL# 151: [IR84-DALHOHV230.0 VOLTS]
CHNL# 150: [IR82_NUTBHV69.0 VOLTS]
CHNL# 149: [IR45_AMHERTP138.0 VOLTS]
1.2000
0.70000
0.0
1.0000
2.0000
3.0000
4.0000
5.0000
6.0000
7.0000
8.0000
9.0000
10.000
TIME (SECONDS)
THU, JAN 29 2009 15:52
WIND BUS VOLTS

2013 WINTER PEAK STORA MIN
NS-NB=0; NB-NE=500; CBX=732; ONI=961 ONS=851
1 PHASE FAULT ON L6009 AT 108H 108H-609 BREAKER FAILS
BBU OPERTES IN 15 CYCLES B2 NO RECLOSING; ALL BS ON
FILE: c110a-108h-609_BBU_mecl-2013WP-NS-0.out
CHNL#S 20,4: [ANGL199169 [TUFTCV3 14.400] [3]] [ANGL156661 [DARL G1 22.000] [1
CHNL#S 17,4: [ANGL199086 [TRENTON613.800] [6]] [ANGL156661 [DARL G1 22.000] [1
CHNL#S 16,4: [ANGL199085 [TRENTN5 13.800] [5]] [ANGL156661 [DARL G1 22.000] [1
CHNL#S 15,4: [ANGL199061 [TMP1 STO13.800] [1]] [ANGL156661 [DARL G1 22.000] [1
CHNL#S 13,4: [ANGL199043 [ACONIG1 20.000] [1]] [ANGL156661 [DARL G1 22.000] [1
CHNL#S 11,4: [ANGL199001 [LINGAN1 14.400] [1]] [ANGL156661 [DARL G1 22.000] [1
100.00
-100.0
50.000
-150.0
0.0
1.0000
2.0000
3.0000
4.0000
5.0000
6.0000
7.0000
8.0000
9.0000
10.000
TIME (SECONDS)
THU, JAN 29 2009 15:52
NS ANGLE

2013 WINTER PEAK STORA MIN
NS-NB=0; NB-NE=500; CBX=732; ONI=961 ONS=851
1 PHASE FAULT ON L6009 AT 108H 108H-609 BREAKER FAILS
BBU OPERTES IN 15 CYCLES B2 NO RECLOSING; ALL BS ON
FILE: c110a-108h-609_BBU_mecl-2013WP-NS-0.out
CHNL#S 10,4: [ANGL190472 [BLLDNG2 19.000] [1]] [ANGL156661 [DARL G1 22.000] [1
CHNL#S 6,4: [ANGL190456 [LEPRG1 26.000] [1]] [ANGL156661 [DARL G1 22.000] [1
CHNL#S 5,4: [ANGL190450 [MACTG1 13.800] [1]] [ANGL156661 [DARL G1 22.000] [1
CHNL#S 3,4: [ANGL126652 [RAV 3 22.000] [1]] [ANGL156661 [DARL G1 22.000] [1
CHNL#S 2,4: [ANGL101063 [MYST G7 22.000] [1]] [ANGL156661 [DARL G1 22.000] [1
CHNL#S 7,4: [ANGL190457 [C.CVG1 19.000] [1]] [ANGL156661 [DARL G1 22.000] [1
100.00
-100.0
0.0
1.0000
2.0000
3.0000
4.0000
5.0000
6.0000
7.0000
8.0000
9.0000
10.000
TIME (SECONDS)
THU, JAN 29 2009 15:52
"NE,NY,NB ANGLE"

2013 WINTER PEAK STORA MIN
NS-NB=0; NB-NE=500; CBX=732; ONI=961 ONS=851
1 PHASE FAULT ON L6009 AT 108H 108H-609 BREAKER FAILS
BBU OPERTES IN 15 CYCLES B2 NO RECLOSING; ALL BS ON
FILE: c110a-108h-609_BBU_mecl-2013WP-NS-0.out
CHNL# 59: [POWR199169 [TUFTCV3 14.400] [3]]
CHNL# 56: [POWR199086 [TRENTON613.800] [6]]
CHNL# 55: [POWR199085 [TRENTN5 13.800] [5]]
CHNL# 54: [POWR199061 [TMP1 STO13.800] [1]]
CHNL# 52: [POWR199043 [ACONIG1 20.000] [1]]
CHNL# 50: [POWR199001 [LINGAN1 14.400] [1]]
2.5000
1.0000
-1.500
0.0
0.0
1.0000
2.0000
3.0000
4.0000
5.0000
6.0000
7.0000
8.0000
9.0000
10.000
TIME (SECONDS)
THU, JAN 29 2009 15:52
NS MW

2013 WINTER PEAK STORA MIN
NS-NB=0; NB-NE=500; CBX=732; ONI=961 ONS=851
1 PHASE FAULT ON L6009 AT 108H 108H-609 BREAKER FAILS
BBU OPERTES IN 15 CYCLES B2 NO RECLOSING; ALL BS ON
FILE: c110a-108h-609_BBU_mecl-2013WP-NS-0.out
CHNL# 49: [POWER190472 [BLLDNG2 19.000] [1]]
CHNL# 45: [POWER190456 [LEPRG1 26.000] [1]]
CHNL# 44: [POWER190450 [MACTG1 13.800] [1]]
CHNL# 42: [POWER126652 [RAV 3 22.000] [1]]
CHNL# 41: [POWER101063 [MYST G7 22.000] [1]]
CHNL# 46: [POWER190457 [C.CVG1 19.000] [1]]
7.0000
9.0000
5.0000
5.0000
6.5000
5.0000
2.0000
4.0000
0.0
0.0
1.0000
0.0
0.0
1.0000
2.0000
3.0000
4.0000
5.0000
6.0000
7.0000
8.0000
9.0000
10.000
TIME (SECONDS)
THU, JAN 29 2009 15:52
"NE,NY,NB POWER"

2013 WINTER PEAK STORA MIN
NS-NB=0; NB-NE=500; CBX=732; ONI=961 ONS=851
1 PHASE FAULT ON L6009 AT 108H 108H-609 BREAKER FAILS
BBU OPERTES IN 15 CYCLES B2 NO RECLOSING; ALL BS ON
FILE: c110a-108h-609_BBU_mecl-2013WP-NS-0.out
CHNL# 119: [VARS IR141-DIGBY]
CHNL# 118: [VARS IR137-STATIA]
CHNL# 117: [VARS IR114-GLENDHU]
CHNL# 116: [VARS IR84-DALHOUSIE]
CHNL# 115: [VARS IR82_NUTTBY]
CHNL# 114: [VARS IR45_AMHERST]
TIME (SECONDS)
THU, JAN 29 2009 15:52
NS WIND MV

2013 WINTER PEAK STORA MIN
NS-NB=0; NB-NE=500; CBX=732; ONI=961 ONS=851
1 PHASE FAULT ON L6009 AT 108H 108H-609 BREAKER FAILS
BBU OPERTES IN 15 CYCLES B2 NO RECLOSING; ALL BS ON
FILE: c110a-108h-609_BBU_mecl-2013WP-NS-0.out
CHNL# 79: [POWER IR141-DIGBY]
CHNL# 78: [POWER IR137-STATIA]
CHNL# 77: [POWER IR114-GLENDHU]
CHNL# 76: [POWER IR84-DALHOUSIE]
CHNL# 75: [POWER IR82_NUTTBY]
CHNL# 74: [POWER IR45_AMHERST]
TIME (SECONDS)
THU, JAN 29 2009 15:52
NS WIND MW

2013 WINTER PEAK STORA MIN
NS-NB=0; NB-NE=500; CBX=732; ONI=961 ONS=851
1 PHASE FAULT ON L6009 AT 108H 108H-609 BREAKER FAILS
BBU OPERTES IN 15 CYCLES B2 NO RECLOSING; ALL BS ON
FILE: c110a-108h-609_BBU_mecl-2013WP-NS-0.out
CHNL# 133: [VOLT199125 [ONSLOW 345.00]]
CHNL# 132: [VOLT199120 [HOPEWELL345.00]]
CHNL# 131: [VOLT199045 [WOODBINE345.00]]
CHNL# 130: [VOLT190320 [SALBRY 345.00]]
CHNL# 128: [VOLT190004 [KESWICK 345.00]]
CHNL# 127: [VOLT 70002 [ORRINGTN345.00]]
TIME (SECONDS)
THU, JAN 29 2009 15:52
"345KV VOLTAGE"

2013 WINTER PEAK STORA MIN
NS-NB=0; NB-NE=500; CBX=732; ONI=961 ONS=851
1 PHASE FAULT ON L6009 AT 108H 108H-609 BREAKER FAILS
BBU OPERTES IN 15 CYCLES B2 NO RECLOSING; ALL BS ON
FILE: c110a-108h-609_BBU_mecl-2013WP-NS-0.out
CHNL# 125: 60*(1+[FREQ199125 [ONSLOW 345.00]])
CHNL# 124: 60*(1+[FREQ199120 [HOPEWELL345.00]])
CHNL# 123: 60*(1+[FREQ199045 [WOODBINE345.00]])
CHNL# 122: 60*(1+[FREQ190320 [SALBRY 345.00]])
CHNL# 121: 60*(1+[FREQ190197 [C.COVE 345.00]])
CHNL# 120: 60*(1+[FREQ 70002 [ORRINGTN345.00]])
TIME (SECONDS)
THU, JAN 29 2009 15:52
FREQUENCY HZ

2013 WINTER PEAK STORA MIN
NS-NB=0; NB-NE=500; CBX=732; ONI=961 ONS=851
1 PHASE FAULT ON L6009 AT 108H 108H-609 BREAKER FAILS
BBU OPERTES IN 15 CYCLES B2 NO RECLOSING; ALL BS ON
FILE: c110a-108h-609_BBU_nrecl-2013WP-NS-0.out
CHNL# 146: [VOLT199280 [TUSKET A138.00]]
CHNL# 145: [VOLT199193 [HHWAS 138.00]]
CHNL# 144: [VOLT199165 [TUFTCOVE138.00]]
CHNL# 143: [VOLT199138 [SPRNGHIL138.00]]
CHNL# 142: [VOLT199090 [SON-TREN138.00]]
CHNL# 141: [VOLT199051 [HASTINGS138.00]]
TIME (SECONDS)
THU, JAN 29 2009 15:52
138KV BUS VOLTS

2013 WINTER PEAK STORA MIN
NS-NB=0; NB-NE=500; CBX=732; ONI=961 ONS=851
1 PHASE FAULT ON L6009 AT 108H 108H-609 BREAKER FAILS
BBU OPERTES IN 15 CYCLES B2 NO RECLOSING; ALL BS ON
FILE: c110a-108h-609_BBU_nrecl-2013WP-NS-0.out
CHNL# 140: [VOLT199240 [BWATER A230.00]]
CHNL# 139: [VOLT199200 [BRUSHY 230.00]]
CHNL# 138: [VOLT199130 [ONSLOW 230.00]]
CHNL# 137: [VOLT199050 [HASTINGS230.00]]
CHNL# 136: [VOLT199044 [PT.ACON230.00]]
CHNL# 135: [VOLT199000 [LINGAN 230.00]]
TIME (SECONDS)
THU, JAN 29 2009 15:52
230KV BUS VOLTS

2013 WINTER PEAK STORA MIN
NS-NB=0; NB-NE=500; CBX=732; ONI=961 ONS=851
1 PHASE FAULT ON L6009 AT 108H 108H-609 BREAKER FAILS
BBU OPERTES IN 15 CYCLES B2 NO RECLOSING; ALL BS ON
FILE: c110a-108h-609_BBU_nrecl-2013WP-NS-0.out
CHNL# 217: [L6513MW]
CHNL# 215: [L6503MW]
CHNL# 197: [L8003MW]
CHNL# 195: [L8004MW]
CHNL# 193: [L8001MW]
CHNL# 221: [L3001MW]
TIME (SECONDS)
THU, JAN 29 2009 15:52
LINE FLOW MW

2013 WINTER PEAK STORA MIN
NS-NB=0; NB-NE=500; CBX=732; ONI=961 ONS=851
1 PHASE FAULT ON L6009 AT 108H 108H-609 BREAKER FAILS
BBU OPERTES IN 15 CYCLES B2 NO RECLOSING; ALL BS ON
FILE: c110a-108h-609_BBU_nrecl-2013WP-NS-0.out
CHNL# 154: [IR141-DIGBYH69.0 VOLTS]
CHNL# 153: [IR137-STATIG25.0 VOLTS]
CHNL# 152: [IR114-GLENDH138.0 VOLTS]
CHNL# 151: [IR84-DALHOHV230.0 VOLTS]
CHNL# 150: [IR82 NUTBHV69.0 VOLTS]
CHNL# 149: [IR45 AMHERTP138.0 VOLTS]
TIME (SECONDS)
THU, JAN 29 2009 15:52
WIND BUS VOLTS

2013 WINTER PEAK STORA MIN
NS-NB=0; NB-NE=500; CBX=732; ONI=961 ONS=851
1 PHASE FAULT ON L6009 AT 108H 108H-609 BREAKER FAILS
BBU OPERTES IN 15 CYCLES B2 NO RECLOSING NO BS ON
FILE: c110b-108h-609_BBU_mecl-2013WP-NS-0.out
CHNL#S 20.4: [ANGL199169 [TUFTCV3 14.400] [3]] [ANGL156661 [DARL G1 22.000] [1
CHNL#S 17.4: [ANGL199086 [TRENTON613.800] [6]] [ANGL156661 [DARL G1 22.000] [1
CHNL#S 16.4: [ANGL199085 [TRENTN5 13.800] [5]] [ANGL156661 [DARL G1 22.000] [1
CHNL#S 15.4: [ANGL199061 [TMP1 STO13.800] [1]] [ANGL156661 [DARL G1 22.000] [1
CHNL#S 13.4: [ANGL199043 [ACONIG1 20.000] [1]] [ANGL156661 [DARL G1 22.000] [1
CHNL#S 11.4: [ANGL199001 [LINGAN1 14.400] [1]] [ANGL156661 [DARL G1 22.000] [1
100.00
-100.0
0.0
1.0000
2.0000
3.0000
4.0000
5.0000
6.0000
7.0000
8.0000
9.0000
10.000
TIME (SECONDS)
THU, JAN 29 2009 15:52
NS ANGLE

2013 WINTER PEAK STORA MIN
NS-NB=0; NB-NE=500; CBX=732; ONI=961 ONS=851
1 PHASE FAULT ON L6009 AT 108H 108H-609 BREAKER FAILS
BBU OPERTES IN 15 CYCLES B2 NO RECLOSING NO BS ON
FILE: c110b-108h-609_BBU_mecl-2013WP-NS-0.out
CHNL#S 10.4: [ANGL190472 [BLLDNG2 19.000] [1]] [ANGL156661 [DARL G1 22.000] [1
CHNL#S 6.4: [ANGL190456 [LEPRG1 26.000] [1]] [ANGL156661 [DARL G1 22.000] [1
CHNL#S 5.4: [ANGL190450 [MACTG1 13.800] [1]] [ANGL156661 [DARL G1 22.000] [1
CHNL#S 3.4: [ANGL126652 [RAV 3 22.000] [1]] [ANGL156661 [DARL G1 22.000] [1
CHNL#S 2.4: [ANGL101063 [MYST G7 22.000] [1]] [ANGL156661 [DARL G1 22.000] [1
CHNL#S 7.4: [ANGL190457 [C.CVG1 19.000] [1]] [ANGL156661 [DARL G1 22.000] [1
100.00
-100.0
0.0
1.0000
2.0000
3.0000
4.0000
5.0000
6.0000
7.0000
8.0000
9.0000
10.000
TIME (SECONDS)
THU, JAN 29 2009 15:52
"NE,NY,NB ANGLE"

2013 WINTER PEAK STORA MIN
NS-NB=0; NB-NE=500; CBX=732; ONI=961 ONS=851
1 PHASE FAULT ON L6009 AT 108H 108H-609 BREAKER FAILS
BBU OPERTES IN 15 CYCLES B2 NO RECLOSING NO BS ON
FILE: c110b-108h-609_BBU_mecl-2013WP-NS-0.out
CHNL# 59: [POWER199169 [TUFTCV3 14.400] [3]]
CHNL# 56: [POWER199086 [TRENTON613.800] [6]]
CHNL# 55: [POWER199085 [TRENTN5 13.800] [5]]
CHNL# 54: [POWER199061 [TMP1 STO13.800] [1]]
CHNL# 52: [POWER199043 [ACONIG1 20.000] [1]]
CHNL# 50: [POWER199001 [LINGAN1 14.400] [1]]
2.5000
0.0
-1.500
1.0000
0.0
1.0000
2.0000
3.0000
4.0000
5.0000
6.0000
7.0000
8.0000
9.0000
10.000
TIME (SECONDS)
THU, JAN 29 2009 15:52
NS MW

2013 WINTER PEAK STORA MIN
NS-NB=0; NB-NE=500; CBX=732; ONI=961 ONS=851
1 PHASE FAULT ON L6009 AT 108H 108H-609 BREAKER FAILS
BBU OPERTES IN 15 CYCLES B2 NO RECLOSING NO BS ON
FILE: c110b-108h-609_BBU_mecl-2013WP-NS-0.out
CHNL# 49: [POWER190472 [BLLDNG2 19.000] [1]]
CHNL# 45: [POWER190456 [LEPRG1 26.000] [1]]
CHNL# 44: [POWER190450 [MACTG1 13.800] [1]]
CHNL# 42: [POWER126652 [RAV 3 22.000] [1]]
CHNL# 41: [POWER101063 [MYST G7 22.000] [1]]
CHNL# 46: [POWER190457 [C.CVG1 19.000] [1]]
7.0000
2.0000
9.0000
4.0000
5.0000
0.0
5.0000
0.0
6.5000
1.0000
1.0000
2.0000
3.0000
4.0000
5.0000
6.0000
7.0000
8.0000
9.0000
10.000
TIME (SECONDS)
THU, JAN 29 2009 15:52
"NE,NY,NB POWER"

2013 WINTER PEAK STORA MIN
NS-NB=0; NB-NE=500; CBX=732; ONI=961 ONS=851
1 PHASE FAULT ON L6009 AT 108H 108H-609 BREAKER FAILS
BBU OPERTES IN 15 CYCLES B2 NO RECLOSING NO BS ON
FILE: c110b-108h-609_BBU_mecl-2013WP-NS-0.out
CHNL# 119: [VARS IR141-DIGBY]
CHNL# 118: [VARS IR137-STATIA]
CHNL# 117: [VARS IR114-GLENDHU]
CHNL# 116: [VARS IR84-DALHOUSIE]
CHNL# 115: [VARS IR82_NUTTBY]
CHNL# 114: [VARS IR45_AMHERST]
TIME (SECONDS)
THU, JAN 29 2009 15:52
NS WIND MV

2013 WINTER PEAK STORA MIN
NS-NB=0; NB-NE=500; CBX=732; ONI=961 ONS=851
1 PHASE FAULT ON L6009 AT 108H 108H-609 BREAKER FAILS
BBU OPERTES IN 15 CYCLES B2 NO RECLOSING NO BS ON
FILE: c110b-108h-609_BBU_mecl-2013WP-NS-0.out
CHNL# 79: [POWER IR141-DIGBY]
CHNL# 78: [POWER IR137-STATIA]
CHNL# 77: [POWER IR114-GLENDHU]
CHNL# 76: [POWER IR84-DALHOUSIE]
CHNL# 75: [POWER IR82_NUTTBY]
CHNL# 74: [POWER IR45_AMHERST]
TIME (SECONDS)
THU, JAN 29 2009 15:52
NS WIND MW

2013 WINTER PEAK STORA MIN
NS-NB=0; NB-NE=500; CBX=732; ONI=961 ONS=851
1 PHASE FAULT ON L6009 AT 108H 108H-609 BREAKER FAILS
BBU OPERTES IN 15 CYCLES B2 NO RECLOSING NO BS ON
FILE: c110b-108h-609_BBU_mecl-2013WP-NS-0.out
CHNL# 133: [VOLT199125 [ONSLOW 345.00]]
CHNL# 132: [VOLT199120 [HOPEWELL345.00]]
CHNL# 131: [VOLT199045 [WOODBINE345.00]]
CHNL# 130: [VOLT190320 [SALBRY 345.00]]
CHNL# 128: [VOLT190004 [KESWICK 345.00]]
CHNL# 127: [VOLT 70002 [ORRINGTN345.00]]
TIME (SECONDS)
THU, JAN 29 2009 15:52
"345KV VOLTAGE"

2013 WINTER PEAK STORA MIN
NS-NB=0; NB-NE=500; CBX=732; ONI=961 ONS=851
1 PHASE FAULT ON L6009 AT 108H 108H-609 BREAKER FAILS
BBU OPERTES IN 15 CYCLES B2 NO RECLOSING NO BS ON
FILE: c110b-108h-609_BBU_mecl-2013WP-NS-0.out
CHNL# 125: 60*(1+[FREQ199125 [ONSLOW 345.00]])
CHNL# 124: 60*(1+[FREQ199120 [HOPEWELL345.00]])
CHNL# 123: 60*(1+[FREQ199045 [WOODBINE345.00]])
CHNL# 122: 60*(1+[FREQ190320 [SALBRY 345.00]])
CHNL# 121: 60*(1+[FREQ190197 [C.COVE 345.00]])
CHNL# 120: 60*(1+[FREQ 70002 [ORRINGTN345.00]])
TIME (SECONDS)
THU, JAN 29 2009 15:52
FREQUENCY HZ

2013 WINTER PEAK STORA MIN
NS-NB=0; NB-NE=500; CBX=732; ONI=961 ONS=851
1 PHASE FAULT ON L6009 AT 108H 108H-609 BREAKER FAILS
BBU OPERTES IN 15 CYCLES B2 NO RECLOSING NO BS ON
FILE: c110b-108h-609_BBU_mrecl-2013WP-NS-0.out
CHNL# 146: [VOLT199280 [TUSKET A138.00]]
CHNL# 145: [VOLT199193 [HHWAS 138.00]]
CHNL# 144: [VOLT199165 [TUFTCOVE138.00]]
CHNL# 143: [VOLT199138 [SPRNGHIL138.00]]
CHNL# 142: [VOLT199090 [SON-TREN138.00]]
CHNL# 141: [VOLT199051 [HASTINGS138.00]]
TIME (SECONDS)
THU, JAN 29 2009 15:52
138KV BUS VOLTS

2013 WINTER PEAK STORA MIN
NS-NB=0; NB-NE=500; CBX=732; ONI=961 ONS=851
1 PHASE FAULT ON L6009 AT 108H 108H-609 BREAKER FAILS
BBU OPERTES IN 15 CYCLES B2 NO RECLOSING NO BS ON
FILE: c110b-108h-609_BBU_mrecl-2013WP-NS-0.out
CHNL# 140: [VOLT199240 [BWATER A230.00]]
CHNL# 139: [VOLT199200 [BRUSHY 230.00]]
CHNL# 138: [VOLT199130 [ONSLOW 230.00]]
CHNL# 137: [VOLT199050 [HASTINGS230.00]]
CHNL# 136: [VOLT199044 [PT.ACONI230.00]]
CHNL# 135: [VOLT199000 [LINGAN 230.00]]
TIME (SECONDS)
THU, JAN 29 2009 15:52
230KV BUS VOLTS

2013 WINTER PEAK STORA MIN
NS-NB=0; NB-NE=500; CBX=732; ONI=961 ONS=851
1 PHASE FAULT ON L6009 AT 108H 108H-609 BREAKER FAILS
BBU OPERTES IN 15 CYCLES B2 NO RECLOSING NO BS ON
FILE: c110b-108h-609_BBU_mrecl-2013WP-NS-0.out
CHNL# 217: [L6513MW]
CHNL# 215: [L6503MW]
CHNL# 197: [L8003MW]
CHNL# 195: [L8004MW]
CHNL# 193: [L8001MW]
CHNL# 221: [L3001MW]
TIME (SECONDS)
THU, JAN 29 2009 15:52
LINE FLOW MW

2013 WINTER PEAK STORA MIN
NS-NB=0; NB-NE=500; CBX=732; ONI=961 ONS=851
1 PHASE FAULT ON L6009 AT 108H 108H-609 BREAKER FAILS
BBU OPERTES IN 15 CYCLES B2 NO RECLOSING NO BS ON
FILE: c110b-108h-609_BBU_mrecl-2013WP-NS-0.out
CHNL# 154: [IR141-DIGBYH69.0 VOLTS]
CHNL# 153: [IR137-STATIG25.0 VOLTS]
CHNL# 152: [IR114-GLENDH138.0 VOLTS]
CHNL# 151: [IR84-DALHOHV230.0 VOLTS]
CHNL# 150: [IR82_NUTBHV69.0 VOLTS]
CHNL# 149: [IR45_AMHERTP138.0 VOLTS]
TIME (SECONDS)
THU, JAN 29 2009 15:52
WIND BUS VOLTS

2013 WINTER PEAK STORA MIN
NS-NB=0; NB-NE=500; CBX=732; ONI=961 ONS=851
1 PHASE FAULT ON BUS TIE BREAKER 103H-600 AT LAKESIDE
CLEARS 103H 138KV BUS
FILE: e101-103H-600-1p_nrecl-2013WP-NS-0.out
CHNL#S 20.4: [ANGL199169 [TUFTCV3 14.400] [3]] [ANGL156661 [DARL G1 22.000] [1
CHNL#S 17.4: [ANGL199086 [TRENTON613.800] [6]] [ANGL156661 [DARL G1 22.000] [1
CHNL#S 16.4: [ANGL199085 [TRENTN5 13.800] [5]] [ANGL156661 [DARL G1 22.000] [1
CHNL#S 15.4: [ANGL199061 [TMP1 STO13.800] [1]] [ANGL156661 [DARL G1 22.000] [1
CHNL#S 13.4: [ANGL199043 [ACONIG1 20.000] [1]] [ANGL156661 [DARL G1 22.000] [1
CHNL#S 11.4: [ANGL199001 [LINGAN1 14.400] [1]] [ANGL156661 [DARL G1 22.000] [1
100.00
-100.0
50.000
-150.0
0.0
1.0000
2.0000
3.0000
4.0000
5.0000
6.0000
7.0000
8.0000
9.0000
10.000
TIME (SECONDS)
THU, JAN 29 2009 15:52
NS ANGLE

2013 WINTER PEAK STORA MIN
NS-NB=0; NB-NE=500; CBX=732; ONI=961 ONS=851
1 PHASE FAULT ON BUS TIE BREAKER 103H-600 AT LAKESIDE
CLEARS 103H 138KV BUS
FILE: e101-103H-600-1p_nrecl-2013WP-NS-0.out
CHNL#S 10.4: [ANGL190272 [BLLDNG2 19.000] [1]] [ANGL156661 [DARL G1 22.000] [1
CHNL#S 6.4: [ANGL190456 [LEPRG1 26.000] [1]] [ANGL156661 [DARL G1 22.000] [1
CHNL#S 5.4: [ANGL190450 [MACTG1 13.800] [1]] [ANGL156661 [DARL G1 22.000] [1
CHNL#S 3.4: [ANGL126652 [RAV 3 22.000] [1]] [ANGL156661 [DARL G1 22.000] [1
CHNL#S 2.4: [ANGL101063 [MYST G7 22.000] [1]] [ANGL156661 [DARL G1 22.000] [1
CHNL#S 7.4: [ANGL190457 [C.CVG1 19.000] [1]] [ANGL156661 [DARL G1 22.000] [1
100.00
-100.0
0.0
1.0000
2.0000
3.0000
4.0000
5.0000
6.0000
7.0000
8.0000
9.0000
10.000
TIME (SECONDS)
THU, JAN 29 2009 15:52
"NE,NY,NB ANGLE"

2013 WINTER PEAK STORA MIN
NS-NB=0; NB-NE=500; CBX=732; ONI=961 ONS=851
1 PHASE FAULT ON BUS TIE BREAKER 103H-600 AT LAKESIDE
CLEARS 103H 138KV BUS
FILE: e101-103H-600-1p_nrecl-2013WP-NS-0.out
CHNL# 59: [POWR199169 [TUFTCV3 14.400] [3]]
CHNL# 56: [POWR199086 [TRENTON613.800] [6]]
CHNL# 55: [POWR199085 [TRENTN5 13.800] [5]]
CHNL# 54: [POWR199061 [TMP1 STO13.800] [1]]
CHNL# 52: [POWR199043 [ACONIG1 20.000] [1]]
CHNL# 50: [POWR199001 [LINGAN1 14.400] [1]]
2.5000
0.0
-1.500
1.0000
0.0
TIME (SECONDS)
THU, JAN 29 2009 15:52
NS MW

2013 WINTER PEAK STORA MIN
NS-NB=0; NB-NE=500; CBX=732; ONI=961 ONS=851
1 PHASE FAULT ON BUS TIE BREAKER 103H-600 AT LAKESIDE
CLEARS 103H 138KV BUS
FILE: e101-103H-600-1p_nrecl-2013WP-NS-0.out
CHNL# 49: [POWER190272 [BLLDNG2 19.000] [1]]
CHNL# 45: [POWER190456 [LEPRG1 26.000] [1]]
CHNL# 44: [POWER190450 [MACTG1 13.800] [1]]
CHNL# 42: [POWER126652 [RAV 3 22.000] [1]]
CHNL# 41: [POWER101063 [MYST G7 22.000] [1]]
CHNL# 46: [POWER190457 [C.CVG1 19.000] [1]]
7.0000
2.0000
9.0000
4.0000
5.0000
0.0
6.5000
1.0000
5.0000
0.0
TIME (SECONDS)
THU, JAN 29 2009 15:52
"NE,NY,NB POWER"

2013 WINTER PEAK STORA MIN
NS-NB=0; NB-NE=500; CBX=732; ONI=961 ONS=851
1 PHASE FAULT ON BUS TIE BREAKER 103H-600 AT LAKESIDE
CLEARS 103H 138KV BUS
FILE: e101-103H-600-1p_nrecl-2013WP-NS-0.out
CHNL# 119: [VARS IR141-DIGBY]
CHNL# 118: [VARS IR137-STATIA]
CHNL# 117: [VARS IR114-GLENDHU]
CHNL# 116: [VARS IR84-DALHOUSIE]
CHNL# 115: [VARS IR82_NUTTBY]
CHNL# 114: [VARS IR45_AMHERST]
0.50000
-0.5000
TIME (SECONDS)
THU, JAN 29 2009 15:52
NS WIND MV

2013 WINTER PEAK STORA MIN
NS-NB=0; NB-NE=500; CBX=732; ONI=961 ONS=851
1 PHASE FAULT ON BUS TIE BREAKER 103H-600 AT LAKESIDE
CLEARS 103H 138KV BUS
FILE: e101-103H-600-1p_nrecl-2013WP-NS-0.out
CHNL# 79: [POWER IR141-DIGBY]
CHNL# 78: [POWER IR137-STATIA]
CHNL# 77: [POWER IR114-GLENDHU]
CHNL# 76: [POWER IR84-DALHOUSIE]
CHNL# 75: [POWER IR82_NUTTBY]
CHNL# 74: [POWER IR45_AMHERST]
1.0000
0.0
TIME (SECONDS)
THU, JAN 29 2009 15:52
NS WIND MW

2013 WINTER PEAK STORA MIN
NS-NB=0; NB-NE=500; CBX=732; ONI=961 ONS=851
1 PHASE FAULT ON BUS TIE BREAKER 103H-600 AT LAKESIDE
CLEARS 103H 138KV BUS
FILE: e101-103H-600-1p_nrecl-2013WP-NS-0.out
CHNL# 133: [VOLT199125 [ONSLOW 345.00]]
CHNL# 132: [VOLT199120 [HOPEWELL 345.00]]
CHNL# 131: [VOLT199045 [WOODBINE345.00]]
CHNL# 130: [VOLT190320 [SALBRY 345.00]]
CHNL# 128: [VOLT190004 [KESWICK 345.00]]
CHNL# 127: [VOLT 70002 [ORRINGTN345.00]]
1.1000
0.90000
TIME (SECONDS)
THU, JAN 29 2009 15:53
"345KV VOLTAGE"

2013 WINTER PEAK STORA MIN
NS-NB=0; NB-NE=500; CBX=732; ONI=961 ONS=851
1 PHASE FAULT ON BUS TIE BREAKER 103H-600 AT LAKESIDE
CLEARS 103H 138KV BUS
FILE: e101-103H-600-1p_nrecl-2013WP-NS-0.out
CHNL# 125: 60*(1+[FREQ199125 [ONSLOW 345.00]])
CHNL# 124: 60*(1+[FREQ199120 [HOPEWELL 345.00]])
CHNL# 123: 60*(1+[FREQ199045 [WOODBINE345.00]])
CHNL# 122: 60*(1+[FREQ190320 [SALBRY 345.00]])
CHNL# 121: 60*(1+[FREQ190197 [C.COVE 345.00]])
CHNL# 120: 60*(1+[FREQ 70002 [ORRINGTN345.00]])
60.500
59.500
TIME (SECONDS)
THU, JAN 29 2009 15:53
FREQUENCY HZ

2013 WINTER PEAK STORA MIN
NS-NB=0; NB-NE=500; CBX=732; ONI=961 ONS=851
1 PHASE FAULT ON BUS TIE BREAKER 103H-600 AT LAKESIDE
CLEARS 103H 138KV BUS
FILE: e101-103H-600-1p_nrecl-2013WP-NS-0.out
CHNL# 146: [VOLT199280 [TUSKET A138.00]]
CHNL# 145: [VOLT199193 [HHWAS 138.00]]
CHNL# 144: [VOLT199165 [TUFTCOVE138.00]]
CHNL# 143: [VOLT199138: [SPRNGHILL138.00]]
CHNL# 142: [VOLT199090 [SON-TREN138.00]]
CHNL# 141: [VOLT199051 [HASTINGS138.00]]
1.2000
0.70000
0.0
1.0000
2.0000
3.0000
4.0000
5.0000
6.0000
7.0000
8.0000
9.0000
10.000
TIME (SECONDS)
THU, JAN 29 2009 15:53
138KV BUS VOLTS

2013 WINTER PEAK STORA MIN
NS-NB=0; NB-NE=500; CBX=732; ONI=961 ONS=851
1 PHASE FAULT ON BUS TIE BREAKER 103H-600 AT LAKESIDE
CLEARS 103H 138KV BUS
FILE: e101-103H-600-1p_nrecl-2013WP-NS-0.out
CHNL# 140: [VOLT199240 [BWATER A230.00]]
CHNL# 139: [VOLT199200 [BRUSHY 230.00]]
CHNL# 138: [VOLT199130 [ONSLOW 230.00]]
CHNL# 137: [VOLT199050 [HASTINGS230.00]]
CHNL# 136: [VOLT199044 [PT.ACONI230.00]]
CHNL# 135: [VOLT199000 [LINGAN 230.00]]
1.2000
0.70000
0.0
1.0000
2.0000
3.0000
4.0000
5.0000
6.0000
7.0000
8.0000
9.0000
10.000
TIME (SECONDS)
THU, JAN 29 2009 15:53
230KV BUS VOLTS

2013 WINTER PEAK STORA MIN
NS-NB=0; NB-NE=500; CBX=732; ONI=961 ONS=851
1 PHASE FAULT ON BUS TIE BREAKER 103H-600 AT LAKESIDE
CLEARS 103H 138KV BUS
FILE: e101-103H-600-1p_nrecl-2013WP-NS-0.out
CHNL# 217: [L6533MW]
CHNL# 215: [L6503MW]
CHNL# 197: [L8003MW]
CHNL# 195: [L8004MW]
CHNL# 193: [L8001MW]
CHNL# 221: [L3001MW]
250.00
500.00
1000.0
0.0
-250.0
-1000.
0.0
1.0000
2.0000
3.0000
4.0000
5.0000
6.0000
7.0000
8.0000
9.0000
10.000
TIME (SECONDS)
THU, JAN 29 2009 15:53
LINE FLOW MW

2013 WINTER PEAK STORA MIN
NS-NB=0; NB-NE=500; CBX=732; ONI=961 ONS=851
1 PHASE FAULT ON BUS TIE BREAKER 103H-600 AT LAKESIDE
CLEARS 103H 138KV BUS
FILE: e101-103H-600-1p_nrecl-2013WP-NS-0.out
CHNL# 154: [IR141-DIGBYH69.0 VOLTS]
CHNL# 153: [IR137-STATIG25.0 VOLTS]
CHNL# 152: [IR114-GLENDH138.0 VOLTS]
CHNL# 151: [IR84-DALHOHV230.0 VOLTS]
CHNL# 150: [IR82 NUTBHV69.0 VOLTS]
CHNL# 149: [IR45 AMHERTP138.0 VOLTS]
1.2000
0.70000
0.0
1.0000
2.0000
3.0000
4.0000
5.0000
6.0000
7.0000
8.0000
9.0000
10.000
TIME (SECONDS)
THU, JAN 29 2009 15:53
WIND BUS VOLTS

2013 WINTER PEAK STORA MIN
NS-NB=0; NB-NE=500; CBX=732; ONI=961 ONS=851
1 PHASE FAULT ON BREAKER 47C-602 AT STORA
CLEARS 2 TMP
FILE: e102-47C-602-1p_nrecl-2013WP-NS-0.out
CHNL#S 20.4: [ANGL199169 [TUFTCV3 14.400] [3]] [ANGL156661 [DARL G1 22.000] [1]
100.00 -100.0
CHNL#S 17.4: [ANGL199086 [TRENTON613.800] [6]] [ANGL156661 [DARL G1 22.000] [1]
100.00 -100.0
CHNL#S 16.4: [ANGL199085 [TRENTN5 13.800] [5]] [ANGL156661 [DARL G1 22.000] [1]
100.00 -100.0
CHNL#S 15.4: [ANGL199061 [TMP1 STO13.800] [1]] [ANGL156661 [DARL G1 22.000] [1]
50.000 -150.0
CHNL#S 13.4: [ANGL199043 [ACONIG1 20.000] [1]] [ANGL156661 [DARL G1 22.000] [1]
100.00 -100.0
CHNL#S 11.4: [ANGL199001 [LINGAN1 14.400] [1]] [ANGL156661 [DARL G1 22.000] [1]
100.00 -100.0
0.0 1.0000 2.0000 3.0000 4.0000 5.0000 6.0000 7.0000 8.0000 9.0000 10.000
TIME (SECONDS)
THU, JAN 29 2009 15:53
NS ANGLE

2013 WINTER PEAK STORA MIN
NS-NB=0; NB-NE=500; CBX=732; ONI=961 ONS=851
1 PHASE FAULT ON BREAKER 47C-602 AT STORA
CLEARS 2 TMP
FILE: e102-47C-602-1p_nrecl-2013WP-NS-0.out
CHNL#S 10.4: [ANGL199472 [BLLDNG2 19.000] [1]] [ANGL156661 [DARL G1 22.000] [1]
100.00 -100.0
CHNL#S 6.4: [ANGL190456 [LEPRG1 26.000] [1]] [ANGL156661 [DARL G1 22.000] [1]
100.00 -100.0
CHNL#S 5.4: [ANGL190450 [MACTG1 13.800] [1]] [ANGL156661 [DARL G1 22.000] [1]
100.00 -100.0
CHNL#S 3.4: [ANGL126652 [RAV 3 22.000] [1]] [ANGL156661 [DARL G1 22.000] [1]
100.00 -100.0
CHNL#S 2.4: [ANGL101063 [MYST G7 22.000] [1]] [ANGL156661 [DARL G1 22.000] [1]
100.00 -100.0
CHNL#S 7.4: [ANGL190457 [C.CVG1 19.000] [1]] [ANGL156661 [DARL G1 22.000] [1]
100.00 -100.0
0.0 1.0000 2.0000 3.0000 4.0000 5.0000 6.0000 7.0000 8.0000 9.0000 10.000
TIME (SECONDS)
THU, JAN 29 2009 15:53
"NE,NY,NB ANGLE"

2013 WINTER PEAK STORA MIN
NS-NB=0; NB-NE=500; CBX=732; ONI=961 ONS=851
1 PHASE FAULT ON BREAKER 47C-602 AT STORA
CLEARS 2 TMP
FILE: e102-47C-602-1p_nrecl-2013WP-NS-0.out
CHNL# 59: [POWR199169 [TUFTCV3 14.400] [3]]
2.5000 0.0
CHNL# 56: [POWR199086 [TRENTON613.800] [6]]
2.5000 0.0
CHNL# 55: [POWR199085 [TRENTN5 13.800] [5]]
2.5000 0.0
CHNL# 54: [POWR199061 [TMP1 STO13.800] [1]]
1.0000 -1.500
CHNL# 52: [POWR199043 [ACONIG1 20.000] [1]]
2.5000 0.0
CHNL# 50: [POWR199001 [LINGAN1 14.400] [1]]
2.5000 0.0
0.0 1.0000 2.0000 3.0000 4.0000 5.0000 6.0000 7.0000 8.0000 9.0000 10.000
TIME (SECONDS)
THU, JAN 29 2009 15:53
NS MW

2013 WINTER PEAK STORA MIN
NS-NB=0; NB-NE=500; CBX=732; ONI=961 ONS=851
1 PHASE FAULT ON BREAKER 47C-602 AT STORA
CLEARS 2 TMP
FILE: e102-47C-602-1p_nrecl-2013WP-NS-0.out
CHNL# 49: [POWER190472 [BLLDNG2 19.000] [1]]
7.0000 2.0000
CHNL# 45: [POWER190456 [LEPRG1 26.000] [1]]
9.0000 4.0000
CHNL# 44: [POWER190450 [MACTG1 13.800] [1]]
5.0000 0.0
CHNL# 42: [POWER126652 [RAV 3 22.000] [1]]
5.0000 0.0
CHNL# 41: [POWER101063 [MYST G7 22.000] [1]]
6.5000 1.0000
CHNL# 46: [POWER190457 [C.CVG1 19.000] [1]]
5.0000 0.0
0.0 1.0000 2.0000 3.0000 4.0000 5.0000 6.0000 7.0000 8.0000 9.0000 10.000
TIME (SECONDS)
THU, JAN 29 2009 15:53
"NE,NY,NB POWER"

2013 WINTER PEAK STORA MIN
NS-NB=0; NB-NE=500; CBX=732; ONI=961 ONS=851
1 PHASE FAULT ON BREAKER 47C-602 AT STORA
CLEARS 2 TMP
FILE: e102-47C-602-1p_nrecl-2013WP-NS-0.out
CHNL# 119: [VARS IR141-DIGBY]
CHNL# 118: [VARS IR137-STATIA]
CHNL# 117: [VARS IR114-GLENDHU]
CHNL# 116: [VARS IR84-DALHOUSIE]
CHNL# 115: [VARS IR82_NUTTBY]
CHNL# 114: [VARS IR45_AMHERST]
TIME (SECONDS)
THU, JAN 29 2009 15:53
NS WIND MV

2013 WINTER PEAK STORA MIN
NS-NB=0; NB-NE=500; CBX=732; ONI=961 ONS=851
1 PHASE FAULT ON BREAKER 47C-602 AT STORA
CLEARS 2 TMP
FILE: e102-47C-602-1p_nrecl-2013WP-NS-0.out
CHNL# 79: [POWER IR141-DIGBY]
CHNL# 78: [POWER IR137-STATIA]
CHNL# 77: [POWER IR114-GLENDHU]
CHNL# 76: [POWER IR84-DALHOUSIE]
CHNL# 75: [POWER IR82_NUTTBY]
CHNL# 74: [POWER IR45_AMHERST]
TIME (SECONDS)
THU, JAN 29 2009 15:53
NS WIND MW

2013 WINTER PEAK STORA MIN
NS-NB=0; NB-NE=500; CBX=732; ONI=961 ONS=851
1 PHASE FAULT ON BREAKER 47C-602 AT STORA
CLEARS 2 TMP
FILE: e102-47C-602-1p_nrecl-2013WP-NS-0.out
CHNL# 133: [VOLT199125 [ONSLOW 345.00]]
CHNL# 132: [VOLT199120 [HOPEWELL 345.00]]
CHNL# 131: [VOLT199045 [WOODBINE345.00]]
CHNL# 130: [VOLT190320 [SALBRY 345.00]]
CHNL# 128: [VOLT190004 [KESWICK 345.00]]
CHNL# 127: [VOLT 70002 [ORRINGTN345.00]]
TIME (SECONDS)
THU, JAN 29 2009 15:53
"345KV VOLTAGE"

2013 WINTER PEAK STORA MIN
NS-NB=0; NB-NE=500; CBX=732; ONI=961 ONS=851
1 PHASE FAULT ON BREAKER 47C-602 AT STORA
CLEARS 2 TMP
FILE: e102-47C-602-1p_nrecl-2013WP-NS-0.out
CHNL# 125: 60*(1+[FREQ199125 [ONSLOW 345.00]])
CHNL# 124: 60*(1+[FREQ199120 [HOPEWELL 345.00]])
CHNL# 123: 60*(1+[FREQ199045 [WOODBINE345.00]])
CHNL# 122: 60*(1+[FREQ190320 [SALBRY 345.00]])
CHNL# 121: 60*(1+[FREQ190197 [C.COVE 345.00]])
CHNL# 120: 60*(1+[FREQ 70002 [ORRINGTN345.00]])
TIME (SECONDS)
THU, JAN 29 2009 15:53
FREQUENCY HZ

2013 WINTER PEAK STORA MIN
NS-NB=0; NB-NE=500; CBX=732; ONI=961 ONS=851
1 PHASE FAULT ON BREAKER 47C-602 AT STORA
CLEARS 2 TMP
FILE: e102-47C-602-1p_nrecl-2013WP-NS-0.out
CHNL# 146: [VOLT199280 [TUSKET A138.00]]
CHNL# 145: [VOLT199193 [HHWAS 138.00]]
CHNL# 144: [VOLT199165 [TUFTCOVE138.00]]
CHNL# 143: [VOLT199138 [SPRNGHILL138.00]]
CHNL# 142: [VOLT199090 [SON-TREN138.00]]
CHNL# 141: [VOLT199051 [HASTINGS138.00]]
1.2000
0.70000
0.0
1.0000
2.0000
3.0000
4.0000
5.0000
6.0000
7.0000
8.0000
9.0000
10.000
TIME (SECONDS)
THU, JAN 29 2009 15:53
138KV BUS VOLTS

2013 WINTER PEAK STORA MIN
NS-NB=0; NB-NE=500; CBX=732; ONI=961 ONS=851
1 PHASE FAULT ON BREAKER 47C-602 AT STORA
CLEARS 2 TMP
FILE: e102-47C-602-1p_nrecl-2013WP-NS-0.out
CHNL# 140: [VOLT199240 [BWATER A230.00]]
CHNL# 139: [VOLT199200 [BRUSHY 230.00]]
CHNL# 138: [VOLT199130 [ONSLOW 230.00]]
CHNL# 137: [VOLT199050 [HASTINGS230.00]]
CHNL# 136: [VOLT199044 [PT.ACONI230.00]]
CHNL# 135: [VOLT199000 [LINGAN 230.00]]
1.2000
0.70000
0.0
1.0000
2.0000
3.0000
4.0000
5.0000
6.0000
7.0000
8.0000
9.0000
10.000
TIME (SECONDS)
THU, JAN 29 2009 15:53
230KV BUS VOLTS

2013 WINTER PEAK STORA MIN
NS-NB=0; NB-NE=500; CBX=732; ONI=961 ONS=851
1 PHASE FAULT ON BREAKER 47C-602 AT STORA
CLEARS 2 TMP
FILE: e102-47C-602-1p_nrecl-2013WP-NS-0.out
CHNL# 217: [L653NMW]
CHNL# 215: [L6503MW]
CHNL# 197: [L8003MW]
CHNL# 195: [L8004MW]
CHNL# 193: [L8001MW]
CHNL# 221: [L3001MW]
250.00
500.00
1000.0
0.0
-250.0
-1000.
0.0
1.0000
2.0000
3.0000
4.0000
5.0000
6.0000
7.0000
8.0000
9.0000
10.000
TIME (SECONDS)
THU, JAN 29 2009 15:53
LINE FLOW MW

2013 WINTER PEAK STORA MIN
NS-NB=0; NB-NE=500; CBX=732; ONI=961 ONS=851
1 PHASE FAULT ON BREAKER 47C-602 AT STORA
CLEARS 2 TMP
FILE: e102-47C-602-1p_nrecl-2013WP-NS-0.out
CHNL# 154: [IR141-DIGBYH69.0 VOLTS]
CHNL# 153: [IR137-STATIG25.0 VOLTS]
CHNL# 152: [IR114-GLENDH138.0 VOLTS]
CHNL# 151: [IR84-DALHOHV230.0 VOLTS]
CHNL# 150: [IR82_NUTBHV69.0 VOLTS]
CHNL# 149: [IR45_AMHERTP138.0 VOLTS]
1.2000
0.70000
0.0
1.0000
2.0000
3.0000
4.0000
5.0000
6.0000
7.0000
8.0000
9.0000
10.000
TIME (SECONDS)
THU, JAN 29 2009 15:53
WIND BUS VOLTS

2013 WINTER PEAK STORA MIN
NS-NB=0; NB-NE=500; CBX=732; ONI=961 ONS=851
1 PHASE FAULT ON BREAKER 91H-523 AT TUFT'S COVE 69KV
CLEARS 5041 AND T11 ALL TC ON
FILE: e103a-91H-523-1p_mrec-2013WP-NS-0.out
CHNL# 20: [ANGL199169 [TUFTCV3 14.400] [3]] [ANGL156661 [DARL G1 22.000] [1
CHNL# 17: [ANGL199086 [TRENTON613.800] [6]] [ANGL156661 [DARL G1 22.000] [1
CHNL# 16: [ANGL199085 [TRENTN5 13.800] [5]] [ANGL156661 [DARL G1 22.000] [1
CHNL# 15: [ANGL199061 [TMP1 STO13.800] [1]] [ANGL156661 [DARL G1 22.000] [1
CHNL# 13: [ANGL199043 [ACONIG1 20.000] [1]] [ANGL156661 [DARL G1 22.000] [1
CHNL# 11: [ANGL199001 [LINGAN1 14.400] [1]] [ANGL156661 [DARL G1 22.000] [1
100.00
-100.0
50.000
-150.0
0.0
1.0000
2.0000
3.0000
4.0000
5.0000
6.0000
7.0000
8.0000
9.0000
10.000
TIME (SECONDS)
THU, JAN 29 2009 15:53
NS ANGLE

2013 WINTER PEAK STORA MIN
NS-NB=0; NB-NE=500; CBX=732; ONI=961 ONS=851
1 PHASE FAULT ON BREAKER 91H-523 AT TUFT'S COVE 69KV
CLEARS 5041 AND T11 ALL TC ON
FILE: e103a-91H-523-1p_mrec-2013WP-NS-0.out
CHNL# 10: [ANGL190472 [BLLDNG2 19.000] [1]] [ANGL156661 [DARL G1 22.000] [1
CHNL# 6: [ANGL190456 [LEPRG1 26.000] [1]] [ANGL156661 [DARL G1 22.000] [1
CHNL# 5: [ANGL190450 [MACTG1 13.800] [1]] [ANGL156661 [DARL G1 22.000] [1
CHNL# 3: [ANGL126652 [RAV 3 22.000] [1]] [ANGL156661 [DARL G1 22.000] [1
CHNL# 2: [ANGL101063 [MYST G7 22.000] [1]] [ANGL156661 [DARL G1 22.000] [1
CHNL# 7: [ANGL190457 [C.CVG1 19.000] [1]] [ANGL156661 [DARL G1 22.000] [1
100.00
-100.0
0.0
1.0000
2.0000
3.0000
4.0000
5.0000
6.0000
7.0000
8.0000
9.0000
10.000
TIME (SECONDS)
THU, JAN 29 2009 15:53
"NE,NY,NB ANGLE"

2013 WINTER PEAK STORA MIN
NS-NB=0; NB-NE=500; CBX=732; ONI=961 ONS=851
1 PHASE FAULT ON BREAKER 91H-523 AT TUFT'S COVE 69KV
CLEARS 5041 AND T11 ALL TC ON
FILE: e103a-91H-523-1p_mrec-2013WP-NS-0.out
CHNL# 59: [POWER199169 [TUFTCV3 14.400] [3]]
CHNL# 56: [POWER199086 [TRENTON613.800] [6]]
CHNL# 55: [POWER199085 [TRENTN5 13.800] [5]]
CHNL# 54: [POWER199061 [TMP1 STO13.800] [1]]
CHNL# 52: [POWER199043 [ACONIG1 20.000] [1]]
CHNL# 50: [POWER199001 [LINGAN1 14.400] [1]]
2.5000
0.0
1.0000
-1.500
0.0
1.0000
2.0000
3.0000
4.0000
5.0000
6.0000
7.0000
8.0000
9.0000
10.000
TIME (SECONDS)
THU, JAN 29 2009 15:53
NS MW

2013 WINTER PEAK STORA MIN
NS-NB=0; NB-NE=500; CBX=732; ONI=961 ONS=851
1 PHASE FAULT ON BREAKER 91H-523 AT TUFT'S COVE 69KV
CLEARS 5041 AND T11 ALL TC ON
FILE: e103a-91H-523-1p_mrec-2013WP-NS-0.out
CHNL# 49: [POWER190472 [BLLDNG2 19.000] [1]]
CHNL# 45: [POWER190456 [LEPRG1 26.000] [1]]
CHNL# 44: [POWER190450 [MACTG1 13.800] [1]]
CHNL# 42: [POWER126652 [RAV 3 22.000] [1]]
CHNL# 41: [POWER101063 [MYST G7 22.000] [1]]
CHNL# 46: [POWER190457 [C.CVG1 19.000] [1]]
7.0000
2.0000
9.0000
4.0000
5.0000
0.0
5.0000
0.0
6.5000
1.0000
5.0000
0.0
1.0000
2.0000
3.0000
4.0000
5.0000
6.0000
7.0000
8.0000
9.0000
10.000
TIME (SECONDS)
THU, JAN 29 2009 15:53
"NE,NY,NB POWER"

NS WIND MV

NS WIND MW

"345KV VOLTAGE"

FREQUENCY HZ

2013 WINTER PEAK STORA MIN
NS-NB=0; NB-NE=500; CBX=732; ONI=961 ONS=851
1 PHASE FAULT ON BREAKER 91H-523 AT TUFT'S COVE 69KV
CLEARS 5041 AND T11 ALL TC ON
FILE: e103a-91H-523-1p_mrecl-2013WP-NS-0.out
CHNL# 146: [VOLT199280 [TUSKET A138.00]]
CHNL# 145: [VOLT199193 [1H-WAS 138.00]]
CHNL# 144: [VOLT199165 [TUFT COVE138.00]]
CHNL# 143: [VOLT199138: [SPRNGHILL138.00]]
CHNL# 142: [VOLT199090 [50N-TREN138.00]]
CHNL# 141: [VOLT199051 [HASTINGS138.00]]
1.2000
0.70000
0.0
1.0000
2.0000
3.0000
4.0000
5.0000
6.0000
7.0000
8.0000
9.0000
10.000
TIME (SECONDS)
THU, JAN 29 2009 15:53
138KV BUS VOLTS

2013 WINTER PEAK STORA MIN
NS-NB=0; NB-NE=500; CBX=732; ONI=961 ONS=851
1 PHASE FAULT ON BREAKER 91H-523 AT TUFT'S COVE 69KV
CLEARS 5041 AND T11 ALL TC ON
FILE: e103a-91H-523-1p_mrecl-2013WP-NS-0.out
CHNL# 140: [VOLT199240 [BWATER A230.00]]
CHNL# 139: [VOLT199200 [BRUSHY 230.00]]
CHNL# 138: [VOLT199130 [ONSLOW 230.00]]
CHNL# 137: [VOLT199050 [HASTINGS230.00]]
CHNL# 136: [VOLT199044 [PT.ACONI230.00]]
CHNL# 135: [VOLT199000 [LINGAN 230.00]]
1.2000
0.70000
0.0
1.0000
2.0000
3.0000
4.0000
5.0000
6.0000
7.0000
8.0000
9.0000
10.000
TIME (SECONDS)
THU, JAN 29 2009 15:53
230KV BUS VOLTS

2013 WINTER PEAK STORA MIN
NS-NB=0; NB-NE=500; CBX=732; ONI=961 ONS=851
1 PHASE FAULT ON BREAKER 91H-523 AT TUFT'S COVE 69KV
CLEARS 5041 AND T11 ALL TC ON
FILE: e103a-91H-523-1p_mrecl-2013WP-NS-0.out
CHNL# 217: [L6533MW]
CHNL# 215: [L6503MW]
CHNL# 197: [L8003MW]
CHNL# 195: [L8004MW]
CHNL# 193: [L8001MW]
CHNL# 221: [L3001MW]
250.00
500.00
1000.0
0.0
-250.0
-1000.
0.0
1.0000
2.0000
3.0000
4.0000
5.0000
6.0000
7.0000
8.0000
9.0000
10.000
TIME (SECONDS)
THU, JAN 29 2009 15:53
LINE FLOW MW

2013 WINTER PEAK STORA MIN
NS-NB=0; NB-NE=500; CBX=732; ONI=961 ONS=851
1 PHASE FAULT ON BREAKER 91H-523 AT TUFT'S COVE 69KV
CLEARS 5041 AND T11 ALL TC ON
FILE: e103a-91H-523-1p_mrecl-2013WP-NS-0.out
CHNL# 154: [IR141-DIGBYH69.0 VOLTS]
CHNL# 153: [IR137-STATIG25.0 VOLTS]
CHNL# 152: [IR114-GLENDH138.0 VOLTS]
CHNL# 151: [IR84-DALHOHV230.0 VOLTS]
CHNL# 150: [IR82 NUTBHV69.0 VOLTS]
CHNL# 149: [IR45 AMHERTP138.0 VOLTS]
1.2000
0.70000
0.0
1.0000
2.0000
3.0000
4.0000
5.0000
6.0000
7.0000
8.0000
9.0000
10.000
TIME (SECONDS)
THU, JAN 29 2009 15:53
WIND BUS VOLTS

2013 WINTER PEAK STORA MIN
NS-NB=0; NB-NE=500; CBX=732; ONI=961 ONS=851
1 PHASE FAULT ON BREAKER 91H-523 AT TUFT'S COVE 69KV
CLEARS 5041 AND T11 TC1 OFF
FILE: e103b-91H-523-1p_mrecl-2013WP-NS-0.out
CHNL#S 20.4: [ANGL199169 [TUFTCV3 14.400] [3]] [ANGL156661 [DARL G1 22.000] [1
CHNL#S 17.4: [ANGL199086 [TRENTON613.800] [6]] [ANGL156661 [DARL G1 22.000] [1
CHNL#S 16.4: [ANGL199085 [TRENTN5 13.800] [5]] [ANGL156661 [DARL G1 22.000] [1
CHNL#S 15.4: [ANGL199061 [TMP1 STO13.800] [1]] [ANGL156661 [DARL G1 22.000] [1
CHNL#S 13.4: [ANGL199043 [ACONIG1 20.000] [1]] [ANGL156661 [DARL G1 22.000] [1
CHNL#S 11.4: [ANGL199001 [LINGAN1 14.400] [1]] [ANGL156661 [DARL G1 22.000] [1
TIME (SECONDS)
THU, JAN 29 2009 15:53
NS ANGLE

2013 WINTER PEAK STORA MIN
NS-NB=0; NB-NE=500; CBX=732; ONI=961 ONS=851
1 PHASE FAULT ON BREAKER 91H-523 AT TUFT'S COVE 69KV
CLEARS 5041 AND T11 TC1 OFF
FILE: e103b-91H-523-1p_mrecl-2013WP-NS-0.out
CHNL#S 10.4: [ANGL190472 [BLLDNG2 19.000] [1]] [ANGL156661 [DARL G1 22.000] [1
CHNL#S 6.4: [ANGL190456 [LEPRG1 26.000] [1]] [ANGL156661 [DARL G1 22.000] [1
CHNL#S 5.4: [ANGL190450 [MACTG1 13.800] [1]] [ANGL156661 [DARL G1 22.000] [1
CHNL#S 3.4: [ANGL126652 [RAV 3 22.000] [1]] [ANGL156661 [DARL G1 22.000] [1
CHNL#S 2.4: [ANGL101063 [MYST G7 22.000] [1]] [ANGL156661 [DARL G1 22.000] [1
CHNL#S 7.4: [ANGL190457 [C.CVG1 19.000] [1]] [ANGL156661 [DARL G1 22.000] [1
TIME (SECONDS)
THU, JAN 29 2009 15:53
"NE,NY,NB ANGLE"

2013 WINTER PEAK STORA MIN
NS-NB=0; NB-NE=500; CBX=732; ONI=961 ONS=851
1 PHASE FAULT ON BREAKER 91H-523 AT TUFT'S COVE 69KV
CLEARS 5041 AND T11 TC1 OFF
FILE: e103b-91H-523-1p_mrecl-2013WP-NS-0.out
CHNL# 59: [POWR199169 [TUFTCV3 14.400] [3]]
CHNL# 56: [POWR199086 [TRENTON613.800] [6]]
CHNL# 55: [POWR199085 [TRENTN5 13.800] [5]]
CHNL# 54: [POWR199061 [TMP1 STO13.800] [1]]
CHNL# 52: [POWR199043 [ACONIG1 20.000] [1]]
CHNL# 50: [POWR199001 [LINGAN1 14.400] [1]]
TIME (SECONDS)
THU, JAN 29 2009 15:53
NS MW

2013 WINTER PEAK STORA MIN
NS-NB=0; NB-NE=500; CBX=732; ONI=961 ONS=851
1 PHASE FAULT ON BREAKER 91H-523 AT TUFT'S COVE 69KV
CLEARS 5041 AND T11 TC1 OFF
FILE: e103b-91H-523-1p_mrecl-2013WP-NS-0.out
CHNL# 49: [POWER190472 [BLLDNG2 19.000] [1]]
CHNL# 45: [POWER190456 [LEPRG1 26.000] [1]]
CHNL# 44: [POWER190450 [MACTG1 13.800] [1]]
CHNL# 42: [POWER126652 [RAV 3 22.000] [1]]
CHNL# 41: [POWER101063 [MYST G7 22.000] [1]]
CHNL# 46: [POWER190457 [C.CVG1 19.000] [1]]
TIME (SECONDS)
THU, JAN 29 2009 15:53
"NE,NY,NB POWER"

NS WIND MV

NS WIND MW

"345KV VOLTAGE"

FREQUENCY HZ

2013 WINTER PEAK STORA MIN
NS-NB=0; NB-NE=500; CBX=732; ONI=961 ONS=851
1 PHASE FAULT ON BREAKER 91H-523 AT TUFT'S COVE 69KV
CLEARS 5041 AND T11 TC1 OFF
FILE: e103b-91H-523-1p_mrecl-2013WP-NS-0.out
CHNL# 146: [VOLT199280 [TUSKET A138.00]]
CHNL# 145: [VOLT199193 [1H-WAS 138.00]]
CHNL# 144: [VOLT199165 [TUFT COVE138.00]]
CHNL# 143: [VOLT199138 [SPRNGHILL138.00]]
CHNL# 142: [VOLT199090 [50N-TREN138.00]]
CHNL# 141: [VOLT199051 [HASTINGS138.00]]
1.2000
0.70000
0.0
1.0000
2.0000
3.0000
4.0000
5.0000
6.0000
7.0000
8.0000
9.0000
10.000
TIME (SECONDS)
THU, JAN 29 2009 15:53
138KV BUS VOLTS

2013 WINTER PEAK STORA MIN
NS-NB=0; NB-NE=500; CBX=732; ONI=961 ONS=851
1 PHASE FAULT ON BREAKER 91H-523 AT TUFT'S COVE 69KV
CLEARS 5041 AND T11 TC1 OFF
FILE: e103b-91H-523-1p_mrecl-2013WP-NS-0.out
CHNL# 140: [VOLT199240 [BWATER A230.00]]
CHNL# 139: [VOLT199200 [BRUSHY 230.00]]
CHNL# 138: [VOLT199130 [ONSLOW 230.00]]
CHNL# 137: [VOLT199050 [HASTINGS230.00]]
CHNL# 136: [VOLT199044 [PT.ACONI230.00]]
CHNL# 135: [VOLT199000 [LINGAN 230.00]]
1.2000
0.70000
0.0
1.0000
2.0000
3.0000
4.0000
5.0000
6.0000
7.0000
8.0000
9.0000
10.000
TIME (SECONDS)
THU, JAN 29 2009 15:53
230KV BUS VOLTS

2013 WINTER PEAK STORA MIN
NS-NB=0; NB-NE=500; CBX=732; ONI=961 ONS=851
1 PHASE FAULT ON BREAKER 91H-523 AT TUFT'S COVE 69KV
CLEARS 5041 AND T11 TC1 OFF
FILE: e103b-91H-523-1p_mrecl-2013WP-NS-0.out
CHNL# 217: [L6533MW]
CHNL# 215: [L6503MW]
CHNL# 197: [L8003MW]
CHNL# 195: [L8004MW]
CHNL# 193: [L8001MW]
CHNL# 221: [L3001MW]
250.00
500.00
1000.0
0.0
-250.0
-1000.
0.0
1.0000
2.0000
3.0000
4.0000
5.0000
6.0000
7.0000
8.0000
9.0000
10.000
TIME (SECONDS)
THU, JAN 29 2009 15:53
LINE FLOW MW

2013 WINTER PEAK STORA MIN
NS-NB=0; NB-NE=500; CBX=732; ONI=961 ONS=851
1 PHASE FAULT ON BREAKER 91H-523 AT TUFT'S COVE 69KV
CLEARS 5041 AND T11 TC1 OFF
FILE: e103b-91H-523-1p_mrecl-2013WP-NS-0.out
CHNL# 154: [IR141-DIGBYH69.0 VOLTS]
CHNL# 153: [IR137-STATIG25.0 VOLTS]
CHNL# 152: [IR114-GLENDH138.0 VOLTS]
CHNL# 151: [IR84-DALHOHV230.0 VOLTS]
CHNL# 150: [IR82_NUTBHV69.0 VOLTS]
CHNL# 149: [IR45_AMHERTP138.0 VOLTS]
1.2000
0.70000
0.0
1.0000
2.0000
3.0000
4.0000
5.0000
6.0000
7.0000
8.0000
9.0000
10.000
TIME (SECONDS)
THU, JAN 29 2009 15:53
WIND BUS VOLTS

2013 WINTER PEAK STORA MIN
NS-NB=0; NB-NE=500; CBX=732; ONI=961 ONS=851
1 PHASE FAULT ON BREAKER 91H-523 AT TUFT'S COVE 69KV
CLEARS 5041 AND T11 TC1 AND 2 OFF
FILE: e103c-91H-523-1p_mecl-2013WP-NS-0.out
CHNL#S 20.4: [ANGL199169 [TUFTCV3 14.400] [3]] [ANGL156661 [DARL G1 22.000] [1
CHNL#S 17.4: [ANGL199086 [TRENTON613.800] [6]] [ANGL156661 [DARL G1 22.000] [1
CHNL#S 16.4: [ANGL199085 [TRENTN5 13.800] [5]] [ANGL156661 [DARL G1 22.000] [1
CHNL#S 15.4: [ANGL199061 [TMP1 STO13.800] [1]] [ANGL156661 [DARL G1 22.000] [1
CHNL#S 13.4: [ANGL199043 [ACONIG1 20.000] [1]] [ANGL156661 [DARL G1 22.000] [1
CHNL#S 11.4: [ANGL199001 [LINGAN1 14.400] [1]] [ANGL156661 [DARL G1 22.000] [1
TIME (SECONDS)
THU, JAN 29 2009 15:53
NS ANGLE

2013 WINTER PEAK STORA MIN
NS-NB=0; NB-NE=500; CBX=732; ONI=961 ONS=851
1 PHASE FAULT ON BREAKER 91H-523 AT TUFT'S COVE 69KV
CLEARS 5041 AND T11 TC1 AND 2 OFF
FILE: e103c-91H-523-1p_mecl-2013WP-NS-0.out
CHNL#S 10.4: [ANGL190472 [BLLDNG2 19.000] [1]] [ANGL156661 [DARL G1 22.000] [1
CHNL#S 6.4: [ANGL190456 [LEPRG1 26.000] [1]] [ANGL156661 [DARL G1 22.000] [1
CHNL#S 5.4: [ANGL190450 [MACTG1 13.800] [1]] [ANGL156661 [DARL G1 22.000] [1
CHNL#S 3.4: [ANGL126652 [RAV 3 22.000] [1]] [ANGL156661 [DARL G1 22.000] [1
CHNL#S 2.4: [ANGL101063 [MYST G7 22.000] [1]] [ANGL156661 [DARL G1 22.000] [1
CHNL#S 7.4: [ANGL190457 [C.CVG1 19.000] [1]] [ANGL156661 [DARL G1 22.000] [1
TIME (SECONDS)
THU, JAN 29 2009 15:53
"NE,NY,NB ANGLE"

2013 WINTER PEAK STORA MIN
NS-NB=0; NB-NE=500; CBX=732; ONI=961 ONS=851
1 PHASE FAULT ON BREAKER 91H-523 AT TUFT'S COVE 69KV
CLEARS 5041 AND T11 TC1 AND 2 OFF
FILE: e103c-91H-523-1p_mecl-2013WP-NS-0.out
CHNL# 59: [POWR199169 [TUFTCV3 14.400] [3]]
CHNL# 56: [POWR199086 [TRENTON613.800] [6]]
CHNL# 55: [POWR199085 [TRENTN5 13.800] [5]]
CHNL# 54: [POWR199061 [TMP1 STO13.800] [1]]
CHNL# 52: [POWR199043 [ACONIG1 20.000] [1]]
CHNL# 50: [POWR199001 [LINGAN1 14.400] [1]]
TIME (SECONDS)
THU, JAN 29 2009 15:53
NS MW

2013 WINTER PEAK STORA MIN
NS-NB=0; NB-NE=500; CBX=732; ONI=961 ONS=851
1 PHASE FAULT ON BREAKER 91H-523 AT TUFT'S COVE 69KV
CLEARS 5041 AND T11 TC1 AND 2 OFF
FILE: e103c-91H-523-1p_mecl-2013WP-NS-0.out
CHNL# 49: [POWER190472 [BLLDNG2 19.000] [1]]
CHNL# 45: [POWER190456 [LEPRG1 26.000] [1]]
CHNL# 44: [POWER190450 [MACTG1 13.800] [1]]
CHNL# 42: [POWER126652 [RAV 3 22.000] [1]]
CHNL# 41: [POWER101063 [MYST G7 22.000] [1]]
CHNL# 46: [POWER190457 [C.CVG1 19.000] [1]]
TIME (SECONDS)
THU, JAN 29 2009 15:53
"NE,NY,NB POWER"

2013 WINTER PEAK STORA MIN
NS-NB=0; NB-NE=500; CBX=732; ONI=961 ONS=851
1 PHASE FAULT ON BREAKER 91H-523 AT TUFT'S COVE 69KV
CLEARS 5041 AND T11 TC1 AND 2 OFF
FILE: e103c-91H-523-1p_mrcl-2013WP-NS-0.out
CHNL# 119: [VARS IR141-DIGBY]
CHNL# 118: [VARS IR137-STATIA]
CHNL# 117: [VARS IR114-GLENDHU]
CHNL# 116: [VARS IR84-DALHOUSIE]
CHNL# 115: [VARS IR82_NUTTBY]
CHNL# 114: [VARS IR45_AMHERST]
0.50000
-0.5000
0.0
1.0000
2.0000
3.0000
4.0000
5.0000
6.0000
7.0000
8.0000
9.0000
10.000
TIME (SECONDS)
THU, JAN 29 2009 15:53
NS WIND MV

2013 WINTER PEAK STORA MIN
NS-NB=0; NB-NE=500; CBX=732; ONI=961 ONS=851
1 PHASE FAULT ON BREAKER 91H-523 AT TUFT'S COVE 69KV
CLEARS 5041 AND T11 TC1 AND 2 OFF
FILE: e103c-91H-523-1p_mrcl-2013WP-NS-0.out
CHNL# 79: [POWER IR141-DIGBY]
CHNL# 78: [POWER IR137-STATIA]
CHNL# 77: [POWER IR114-GLENDHU]
CHNL# 76: [POWER IR84-DALHOUSIE]
CHNL# 75: [POWER IR82_NUTTBY]
CHNL# 74: [POWER IR45_AMHERST]
1.0000
0.0
0.0
1.0000
2.0000
3.0000
4.0000
5.0000
6.0000
7.0000
8.0000
9.0000
10.000
TIME (SECONDS)
THU, JAN 29 2009 15:53
NS WIND MW

2013 WINTER PEAK STORA MIN
NS-NB=0; NB-NE=500; CBX=732; ONI=961 ONS=851
1 PHASE FAULT ON BREAKER 91H-523 AT TUFT'S COVE 69KV
CLEARS 5041 AND T11 TC1 AND 2 OFF
FILE: e103c-91H-523-1p_mrcl-2013WP-NS-0.out
CHNL# 133: [VOLT199125 [ONSLOW 345.00]]
CHNL# 132: [VOLT199120 [HOPEWELL 345.00]]
CHNL# 131: [VOLT199045 [WOODBINE345.00]]
CHNL# 130: [VOLT190320 [SALBRY 345.00]]
CHNL# 128: [VOLT190004 [KESWICK 345.00]]
CHNL# 127: [VOLT 70002 [ORRINGTN345.00]]
0.90000
1.1000
0.0
1.0000
2.0000
3.0000
4.0000
5.0000
6.0000
7.0000
8.0000
9.0000
10.000
TIME (SECONDS)
THU, JAN 29 2009 15:53
"345KV VOLTAGE"

2013 WINTER PEAK STORA MIN
NS-NB=0; NB-NE=500; CBX=732; ONI=961 ONS=851
1 PHASE FAULT ON BREAKER 91H-523 AT TUFT'S COVE 69KV
CLEARS 5041 AND T11 TC1 AND 2 OFF
FILE: e103c-91H-523-1p_mrcl-2013WP-NS-0.out
CHNL# 125: 60*(1+[FREQ199125 [ONSLOW 345.00]])
CHNL# 124: 60*(1+[FREQ199120 [HOPEWELL 345.00]])
CHNL# 123: 60*(1+[FREQ199045 [WOODBINE345.00]])
CHNL# 122: 60*(1+[FREQ190320 [SALBRY 345.00]])
CHNL# 121: 60*(1+[FREQ190197 [C.COVE 345.00]])
CHNL# 120: 60*(1+[FREQ 70002 [ORRINGTN345.00]])
60.500
59.500
0.0
1.0000
2.0000
3.0000
4.0000
5.0000
6.0000
7.0000
8.0000
9.0000
10.000
TIME (SECONDS)
THU, JAN 29 2009 15:53
FREQUENCY HZ

2013 WINTER PEAK STORA MIN
NS-NB=0; NB-NE=500; CBX=732; ONI=961 ONS=851
1 PHASE FAULT ON BREAKER 91H-523 AT TUFT'S COVE 69KV
CLEARS 5041 AND T11 TC1 AND 2 OFF
FILE: e103c-91H-523-1p_mrecl-2013WP-NS-0.out
CHNL# 146: [VOLT199280 [TUSKET A138.00]]
CHNL# 145: [VOLT199193 [1H-WAS 138.00]]
CHNL# 144: [VOLT199165 [TUFT COVE138.00]]
CHNL# 143: [VOLT199138 [SPRNGHILL138.00]]
CHNL# 142: [VOLT199090 [50N-TREN138.00]]
CHNL# 141: [VOLT199051 [HASTINGS138.00]]
1.2000
0.70000
0.0
1.0000
2.0000
3.0000
4.0000
5.0000
6.0000
7.0000
8.0000
9.0000
10.000
TIME (SECONDS)
THU, JAN 29 2009 15:53
138KV BUS VOLTS

2013 WINTER PEAK STORA MIN
NS-NB=0; NB-NE=500; CBX=732; ONI=961 ONS=851
1 PHASE FAULT ON BREAKER 91H-523 AT TUFT'S COVE 69KV
CLEARS 5041 AND T11 TC1 AND 2 OFF
FILE: e103c-91H-523-1p_mrecl-2013WP-NS-0.out
CHNL# 140: [VOLT199240 [BWATER A230.00]]
CHNL# 139: [VOLT199200 [BRUSHY 230.00]]
CHNL# 138: [VOLT199130 [ONSLOW 230.00]]
CHNL# 137: [VOLT199050 [HASTINGS230.00]]
CHNL# 136: [VOLT199044 [PT.ACONI230.00]]
CHNL# 135: [VOLT199000 [LINGAN 230.00]]
1.2000
0.70000
0.0
1.0000
2.0000
3.0000
4.0000
5.0000
6.0000
7.0000
8.0000
9.0000
10.000
TIME (SECONDS)
THU, JAN 29 2009 15:53
230KV BUS VOLTS

2013 WINTER PEAK STORA MIN
NS-NB=0; NB-NE=500; CBX=732; ONI=961 ONS=851
1 PHASE FAULT ON BREAKER 91H-523 AT TUFT'S COVE 69KV
CLEARS 5041 AND T11 TC1 AND 2 OFF
FILE: e103c-91H-523-1p_mrecl-2013WP-NS-0.out
CHNL# 217: [L6533MW]
CHNL# 215: [L6503MW]
CHNL# 197: [L8003MW]
CHNL# 195: [L8004MW]
CHNL# 193: [L8001MW]
CHNL# 221: [L3001MW]
250.00
500.00
1000.0
0.0
-250.0
-1000.
0.0
1.0000
2.0000
3.0000
4.0000
5.0000
6.0000
7.0000
8.0000
9.0000
10.000
TIME (SECONDS)
THU, JAN 29 2009 15:53
LINE FLOW MW

2013 WINTER PEAK STORA MIN
NS-NB=0; NB-NE=500; CBX=732; ONI=961 ONS=851
1 PHASE FAULT ON BREAKER 91H-523 AT TUFT'S COVE 69KV
CLEARS 5041 AND T11 TC1 AND 2 OFF
FILE: e103c-91H-523-1p_mrecl-2013WP-NS-0.out
CHNL# 154: [IR141-DIGBYH69.0 VOLTS]
CHNL# 153: [IR137-STATIG25.0 VOLTS]
CHNL# 152: [IR114-GLENDH138.0 VOLTS]
CHNL# 151: [IR84-DALHOHV230.0 VOLTS]
CHNL# 150: [IR82_NUTBHV69.0 VOLTS]
CHNL# 149: [IR45_AMHERTP138.0 VOLTS]
1.2000
0.70000
0.0
1.0000
2.0000
3.0000
4.0000
5.0000
6.0000
7.0000
8.0000
9.0000
10.000
TIME (SECONDS)
THU, JAN 29 2009 15:53
WIND BUS VOLTS

2013 WINTER PEAK STORA MIN
NS-NB=0; NB-NE=500; CBX=732; ONI=961 ONS=851
1 PHASE FAULT ON BREAKER 91H-523 AT TUFT'S COVE 69KV
CLEARS 5041 AND T11 ALL TC OFF
FILE: e103d-91H-523-1p_mrec-2013WP-NS-0.out
CHNL# 20: [ANGL199169 [TUFTCV3 14.400] [3]] [ANGL156661 [DARL G1 22.000] [1
CHNL# 17: [ANGL199086 [TRENTON613.800] [6]] [ANGL156661 [DARL G1 22.000] [1
CHNL# 16: [ANGL199085 [TRENTN5 13.800] [5]] [ANGL156661 [DARL G1 22.000] [1
CHNL# 15: [ANGL199061 [TMP1 STO13.800] [1]] [ANGL156661 [DARL G1 22.000] [1
CHNL# 13: [ANGL199043 [ACONIG1 20.000] [1]] [ANGL156661 [DARL G1 22.000] [1
CHNL# 11: [ANGL199001 [LINGAN1 14.400] [1]] [ANGL156661 [DARL G1 22.000] [1
100.00
-100.0
50.000
-150.0
0.0
1.0000
2.0000
3.0000
4.0000
5.0000
6.0000
7.0000
8.0000
9.0000
10.000
TIME (SECONDS)
THU, JAN 29 2009 15:53
NS ANGLE

2013 WINTER PEAK STORA MIN
NS-NB=0; NB-NE=500; CBX=732; ONI=961 ONS=851
1 PHASE FAULT ON BREAKER 91H-523 AT TUFT'S COVE 69KV
CLEARS 5041 AND T11 ALL TC OFF
FILE: e103d-91H-523-1p_mrec-2013WP-NS-0.out
CHNL# 10: [ANGL190472 [BLLDNG2 19.000] [1]] [ANGL156661 [DARL G1 22.000] [1
CHNL# 6: [ANGL190456 [LEPRG1 26.000] [1]] [ANGL156661 [DARL G1 22.000] [1
CHNL# 5: [ANGL190450 [MACTG1 13.800] [1]] [ANGL156661 [DARL G1 22.000] [1
CHNL# 3: [ANGL126652 [RAV 3 22.000] [1]] [ANGL156661 [DARL G1 22.000] [1
CHNL# 2: [ANGL101063 [MYST G7 22.000] [1]] [ANGL156661 [DARL G1 22.000] [1
CHNL# 7: [ANGL190457 [C.CVG1 19.000] [1]] [ANGL156661 [DARL G1 22.000] [1
100.00
-100.0
0.0
1.0000
2.0000
3.0000
4.0000
5.0000
6.0000
7.0000
8.0000
9.0000
10.000
TIME (SECONDS)
THU, JAN 29 2009 15:53
"NE,NY,NB ANGLE"

2013 WINTER PEAK STORA MIN
NS-NB=0; NB-NE=500; CBX=732; ONI=961 ONS=851
1 PHASE FAULT ON BREAKER 91H-523 AT TUFT'S COVE 69KV
CLEARS 5041 AND T11 ALL TC OFF
FILE: e103d-91H-523-1p_mrec-2013WP-NS-0.out
CHNL# 59: [POWR199169 [TUFTCV3 14.400] [3]]
CHNL# 56: [POWR199086 [TRENTON613.800] [6]]
CHNL# 55: [POWR199085 [TRENTN5 13.800] [5]]
CHNL# 54: [POWR199061 [TMP1 STO13.800] [1]]
CHNL# 52: [POWR199043 [ACONIG1 20.000] [1]]
CHNL# 50: [POWR199001 [LINGAN1 14.400] [1]]
2.5000
0.0
1.0000
-1.500
0.0
1.0000
2.0000
3.0000
4.0000
5.0000
6.0000
7.0000
8.0000
9.0000
10.000
TIME (SECONDS)
THU, JAN 29 2009 15:53
NS MW

2013 WINTER PEAK STORA MIN
NS-NB=0; NB-NE=500; CBX=732; ONI=961 ONS=851
1 PHASE FAULT ON BREAKER 91H-523 AT TUFT'S COVE 69KV
CLEARS 5041 AND T11 ALL TC OFF
FILE: e103d-91H-523-1p_mrec-2013WP-NS-0.out
CHNL# 49: [POWER190472 [BLLDNG2 19.000] [1]]
CHNL# 45: [POWER190456 [LEPRG1 26.000] [1]]
CHNL# 44: [POWER190450 [MACTG1 13.800] [1]]
CHNL# 42: [POWER126652 [RAV 3 22.000] [1]]
CHNL# 41: [POWER101063 [MYST G7 22.000] [1]]
CHNL# 46: [POWER190457 [C.CVG1 19.000] [1]]
7.0000
2.0000
9.0000
4.0000
5.0000
0.0
5.0000
0.0
6.5000
1.0000
5.0000
0.0
1.0000
2.0000
3.0000
4.0000
5.0000
6.0000
7.0000
8.0000
9.0000
10.000
TIME (SECONDS)
THU, JAN 29 2009 15:53
"NE,NY,NB POWER"

2013 WINTER PEAK STORA MIN
NS-NB=0; NB-NE=500; CBX=732; ONI=961 ONS=851
1 PHASE FAULT ON BREAKER 91H-523 AT TUFT'S COVE 69KV
CLEARS 5041 AND T11 ALL TC OFF
FILE: e103d-91H-523-1p_mrecl-2013WP-NS-0.out
CHNL# 119: [VARS IR141-DIGBY]
CHNL# 118: [VARS IR137-STATIA]
CHNL# 117: [VARS IR114-GLENDHU]
CHNL# 116: [VARS IR84-DALHOUSIE]
CHNL# 115: [VARS IR82_NUTTBY]
CHNL# 114: [VARS IR45_AMHERST]
0.50000
-0.5000
0.0
1.0000
2.0000
3.0000
4.0000
5.0000
6.0000
7.0000
8.0000
9.0000
10.000
TIME (SECONDS)
THU, JAN 29 2009 15:53
NS WIND MV

2013 WINTER PEAK STORA MIN
NS-NB=0; NB-NE=500; CBX=732; ONI=961 ONS=851
1 PHASE FAULT ON BREAKER 91H-523 AT TUFT'S COVE 69KV
CLEARS 5041 AND T11 ALL TC OFF
FILE: e103d-91H-523-1p_mrecl-2013WP-NS-0.out
CHNL# 79: [POWER IR141-DIGBY]
CHNL# 78: [POWER IR137-STATIA]
CHNL# 77: [POWER IR114-GLENDHU]
CHNL# 76: [POWER IR84-DALHOUSIE]
CHNL# 75: [POWER IR82_NUTTBY]
CHNL# 74: [POWER IR45_AMHERST]
1.0000
0.0
0.0
1.0000
2.0000
3.0000
4.0000
5.0000
6.0000
7.0000
8.0000
9.0000
10.000
TIME (SECONDS)
THU, JAN 29 2009 15:53
NS WIND MW

2013 WINTER PEAK STORA MIN
NS-NB=0; NB-NE=500; CBX=732; ONI=961 ONS=851
1 PHASE FAULT ON BREAKER 91H-523 AT TUFT'S COVE 69KV
CLEARS 5041 AND T11 ALL TC OFF
FILE: e103d-91H-523-1p_mrecl-2013WP-NS-0.out
CHNL# 133: [VOLT199125 [ONSLOW 345.00]]
CHNL# 132: [VOLT199120 [HOPEWELL 345.00]]
CHNL# 131: [VOLT199045 [WOODBINE345.00]]
CHNL# 130: [VOLT190320 [SALBRY 345.00]]
CHNL# 128: [VOLT190004 [KESWICK 345.00]]
CHNL# 127: [VOLT 70002 [ORRINGTN345.00]]
1.1000
0.90000
0.0
1.0000
2.0000
3.0000
4.0000
5.0000
6.0000
7.0000
8.0000
9.0000
10.000
TIME (SECONDS)
THU, JAN 29 2009 15:53
"345KV VOLTAGE"

2013 WINTER PEAK STORA MIN
NS-NB=0; NB-NE=500; CBX=732; ONI=961 ONS=851
1 PHASE FAULT ON BREAKER 91H-523 AT TUFT'S COVE 69KV
CLEARS 5041 AND T11 ALL TC OFF
FILE: e103d-91H-523-1p_mrecl-2013WP-NS-0.out
CHNL# 125: 60*(1+[FREQ199125 [ONSLOW 345.00]])
CHNL# 124: 60*(1+[FREQ199120 [HOPEWELL 345.00]])
CHNL# 123: 60*(1+[FREQ199045 [WOODBINE345.00]])
CHNL# 122: 60*(1+[FREQ190320 [SALBRY 345.00]])
CHNL# 121: 60*(1+[FREQ190197 [C.COVE 345.00]])
CHNL# 120: 60*(1+[FREQ 70002 [ORRINGTN345.00]])
60.500
59.500
0.0
1.0000
2.0000
3.0000
4.0000
5.0000
6.0000
7.0000
8.0000
9.0000
10.000
TIME (SECONDS)
THU, JAN 29 2009 15:53
FREQUENCY HZ

2013 WINTER PEAK STORA MIN
NS-NB=0; NB-NE=500; CBX=732; ONI=961 ONS=851
1 PHASE FAULT ON BREAKER 91H-523 AT TUFT'S COVE 69KV
CLEARS 5041 AND T11 ALL TC OFF
FILE: e103d-91H-523-1p_nrecl-2013WP-NS-0.out
CHNL# 146: [VOLT199280 [TUSKET A138.00]]
CHNL# 145: [VOLT199193 [1H-WAS 138.00]]
CHNL# 144: [VOLT199165 [TUFT COVE138.00]]
CHNL# 143: [VOLT199138: [SPRNGHILL138.00]]
CHNL# 142: [VOLT199090 [50N-TREN138.00]]
CHNL# 141: [VOLT199051 [HASTINGS138.00]]
1.2000
0.70000
0.0
1.0000
2.0000
3.0000
4.0000
5.0000
6.0000
7.0000
8.0000
9.0000
10.000
TIME (SECONDS)
THU, JAN 29 2009 15:53
138KV BUS VOLTS

2013 WINTER PEAK STORA MIN
NS-NB=0; NB-NE=500; CBX=732; ONI=961 ONS=851
1 PHASE FAULT ON BREAKER 91H-523 AT TUFT'S COVE 69KV
CLEARS 5041 AND T11 ALL TC OFF
FILE: e103d-91H-523-1p_nrecl-2013WP-NS-0.out
CHNL# 140: [VOLT199240 [BWATER A230.00]]
CHNL# 139: [VOLT199200 [BRUSHY 230.00]]
CHNL# 138: [VOLT199130 [ONSLOW 230.00]]
CHNL# 137: [VOLT199050 [HASTINGS230.00]]
CHNL# 136: [VOLT199044 [PT.ACONI230.00]]
CHNL# 135: [VOLT199000 [LINGAN 230.00]]
1.2000
0.70000
0.0
1.0000
2.0000
3.0000
4.0000
5.0000
6.0000
7.0000
8.0000
9.0000
10.000
TIME (SECONDS)
THU, JAN 29 2009 15:53
230KV BUS VOLTS

2013 WINTER PEAK STORA MIN
NS-NB=0; NB-NE=500; CBX=732; ONI=961 ONS=851
1 PHASE FAULT ON BREAKER 91H-523 AT TUFT'S COVE 69KV
CLEARS 5041 AND T11 ALL TC OFF
FILE: e103d-91H-523-1p_nrecl-2013WP-NS-0.out
CHNL# 217: [L6533MW]
CHNL# 215: [L6503MW]
CHNL# 197: [L8003MW]
CHNL# 195: [L8004MW]
CHNL# 193: [L8001MW]
CHNL# 221: [L3001MW]
250.00
500.00
1000.0
0.0
-250.0
-1000.
0.70000
0.0
1.0000
2.0000
3.0000
4.0000
5.0000
6.0000
7.0000
8.0000
9.0000
10.000
TIME (SECONDS)
THU, JAN 29 2009 15:53
LINE FLOW MW

2013 WINTER PEAK STORA MIN
NS-NB=0; NB-NE=500; CBX=732; ONI=961 ONS=851
1 PHASE FAULT ON BREAKER 91H-523 AT TUFT'S COVE 69KV
CLEARS 5041 AND T11 ALL TC OFF
FILE: e103d-91H-523-1p_nrecl-2013WP-NS-0.out
CHNL# 154: [IR141-DIGBYH69.0 VOLTS]
CHNL# 153: [IR137-STATIG25.0 VOLTS]
CHNL# 152: [IR114-GLENDH138.0 VOLTS]
CHNL# 151: [IR84-DALHOHV230.0 VOLTS]
CHNL# 150: [IR82_NUTBHV69.0 VOLTS]
CHNL# 149: [IR45_AMHERTP138.0 VOLTS]
1.2000
0.70000
0.0
1.0000
2.0000
3.0000
4.0000
5.0000
6.0000
7.0000
8.0000
9.0000
10.000
TIME (SECONDS)
THU, JAN 29 2009 15:53
WIND BUS VOLTS

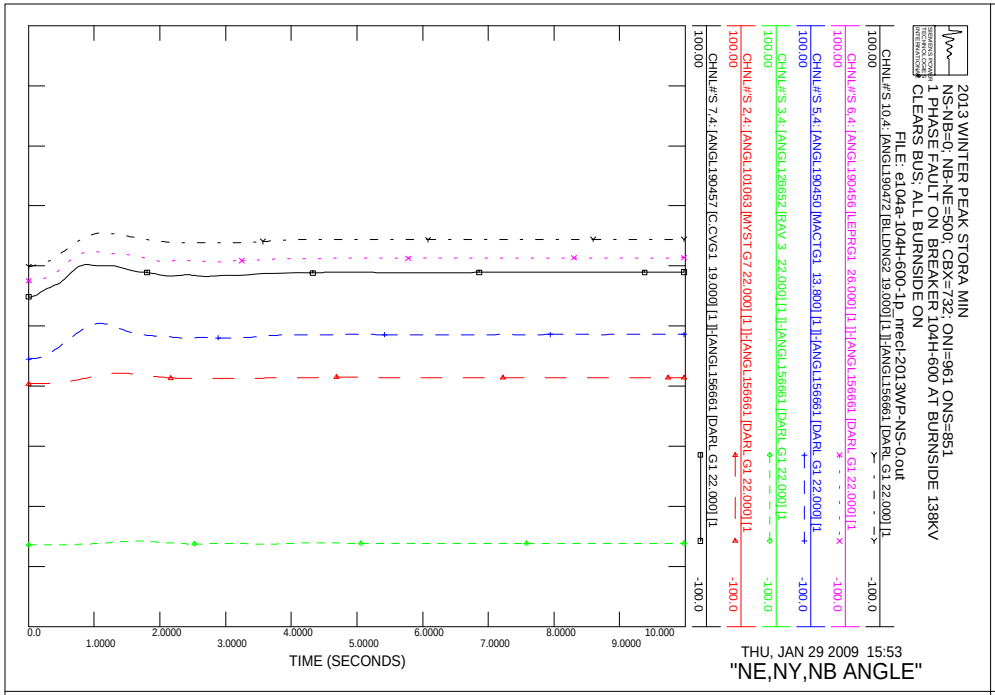
2013 WINTER PEAK STORA MIN
NS-NB=0; NB-NE=500; CBX=732; ONI=961 ONS=851
1 PHASE FAULT ON BREAKER 104H-600 AT BURNSIDE 138KV
CLEARS BUS; ALL BURNSIDE ON
FILE: e104a-104H-600-1p_nrecl-2013WP-NS-0.out
CHNL#'S 10,4: [ANGL190472 [BLLDNG2 19.000] [1]]-[ANGL156661 [DARL G1 22.000] [1
CHNL#'S 6,4: [ANGL190456 [LEPRG1 26.000] [1]]-[ANGL156661 [DARL G1 22.000] [1
CHNL#'S 5,4: [ANGL190450 [MACTG1 13.800] [1]]-[ANGL156661 [DARL G1 22.000] [1
CHNL#'S 3,4: [ANGL126652 [RAV 3 22.000] [1]]-[ANGL156661 [DARL G1 22.000] [1
CHNL#'S 2,4: [ANGL101063 [MYST G7 22.000] [1]]-[ANGL156661 [DARL G1 22.000] [1
CHNL#'S 7,4: [ANGL190457 [C.CVG1 19.000] [1]]-[ANGL156661 [DARL G1 22.000] [1
100.00
-100.0
TIME (SECONDS)
THU, JAN 29 2009 15:53
"NE,NY,NB ANGLE"

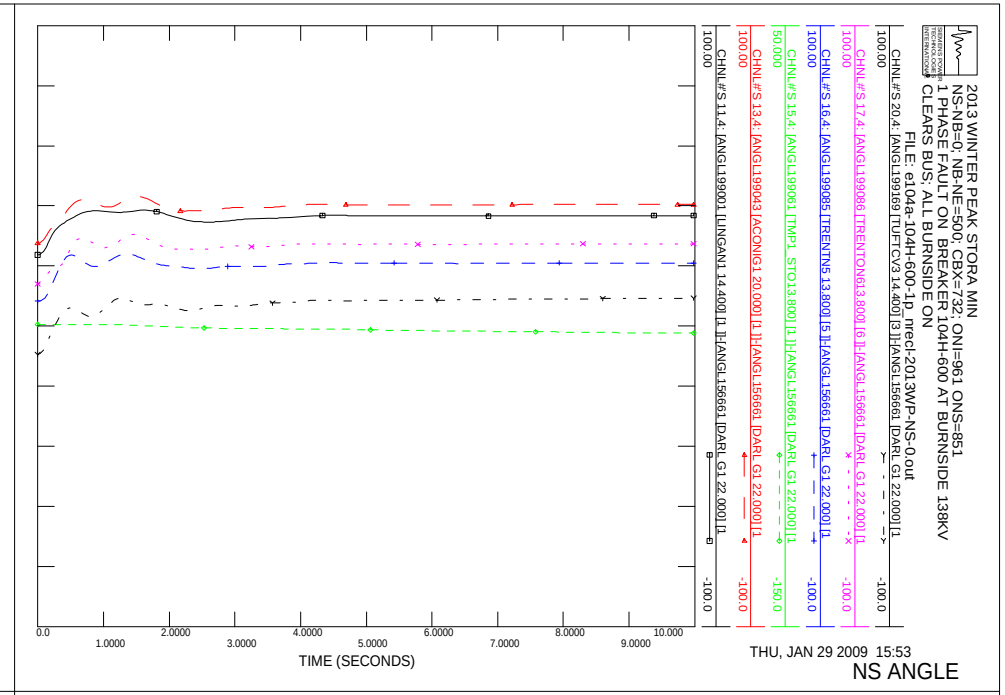
2013 WINTER PEAK STORA MIN
NS-NB=0; NB-NE=500; CBX=732; ONI=961 ONS=851
1 PHASE FAULT ON BREAKER 104H-600 AT BURNSIDE 138KV
CLEARS BUS; ALL BURNSIDE ON
FILE: e104a-104H-600-1p_nrecl-2013WP-NS-0.out
CHNL#'S 20,4: [ANGL199169 [TUFTCV3 14.400] [3]]-[ANGL156661 [DARL G1 22.000] [1
CHNL#'S 17,4: [ANGL199086 [TRENTON613.800] [6]]-[ANGL156661 [DARL G1 22.000] [1
CHNL#'S 16,4: [ANGL199085 [TRENTN5 13.800] [5]]-[ANGL156661 [DARL G1 22.000] [1
CHNL#'S 15,4: [ANGL199061 [TMP1 STO13.800] [1]]-[ANGL156661 [DARL G1 22.000] [1
CHNL#'S 13,4: [ANGL199043 [ACONIG1 20.000] [1]]-[ANGL156661 [DARL G1 22.000] [1
CHNL#'S 11,4: [ANGL199001 [LINGAN1 14.400] [1]]-[ANGL156661 [DARL G1 22.000] [1
100.00
-100.0
TIME (SECONDS)
THU, JAN 29 2009 15:53
NS ANGLE

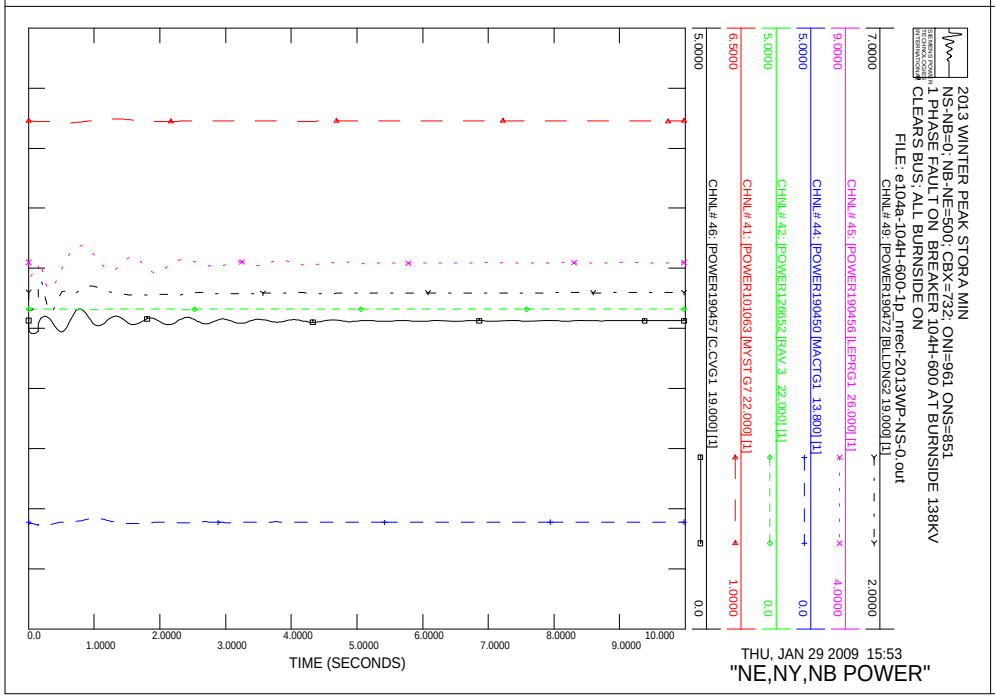
2013 WINTER PEAK STORA MIN
NS-NB=0; NB-NE=500; CBX=732; ONI=961 ONS=851
1 PHASE FAULT ON BREAKER 104H-600 AT BURNSIDE 138KV
CLEARS BUS; ALL BURNSIDE ON
FILE: e104a-104H-600-1p_nrecl-2013WP-NS-0.out
CHNL# 49: [POWER190472 [BLLDNG2 19.000] [1]
CHNL# 45: [POWER190456 [LEPRG1 26.000] [1]
CHNL# 44: [POWER190450 [MACTG1 13.800] [1]
CHNL# 42: [POWER126652 [RAV 3 22.000] [1]
CHNL# 41: [POWER101063 [MYST G7 22.000] [1]
CHNL# 46: [POWER190457 [C.CVG1 19.000] [1]
7.0000
2.0000
9.0000
4.0000
5.0000
0.0
6.5000
1.0000
5.0000
0.0
TIME (SECONDS)
THU, JAN 29 2009 15:53
"NE,NY,NB POWER"

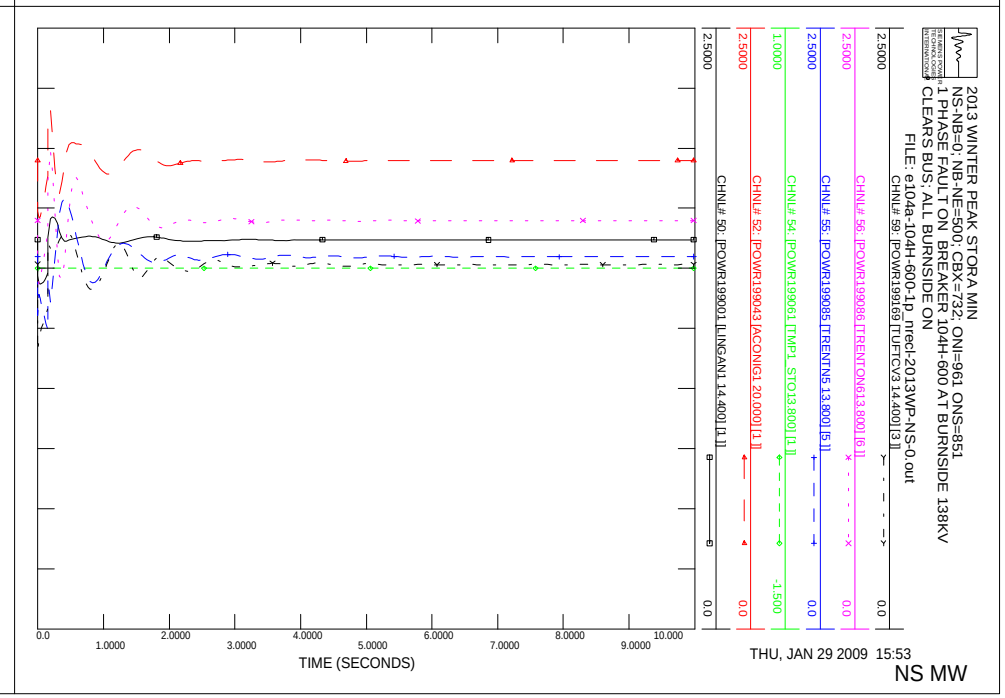
2013 WINTER PEAK STORA MIN
NS-NB=0; NB-NE=500; CBX=732; ONI=961 ONS=851
1 PHASE FAULT ON BREAKER 104H-600 AT BURNSIDE 138KV
CLEARS BUS; ALL BURNSIDE ON
FILE: e104a-104H-600-1p_nrecl-2013WP-NS-0.out
CHNL# 59: [POWR199169 [TUFTCV3 14.400] [3]]
CHNL# 56: [POWR199086 [TRENTON613.800] [6]]
CHNL# 55: [POWR199085 [TRENTN5 13.800] [5]]
CHNL# 54: [POWR199061 [TMP1 STO13.800] [1]]
CHNL# 52: [POWR199043 [ACONIG1 20.000] [1]]
CHNL# 50: [POWR199001 [LINGAN1 14.400] [1]]
2.5000
0.0
1.0000
-1.500
TIME (SECONDS)
THU, JAN 29 2009 15:53
NS MW

2013 WINTER PEAK STORA MIN
NS-NB=0; NB-NE=500; CBX=732; ONI=961 ONS=851
1 PHASE FAULT ON BREAKER 104H-600 AT BURNSIDE 138KV
CLEARS BUS; ALL BURNSIDE ON
FILE: e104a-104H-600-1p_mrecl-2013WP-NS-0.out
CHNL# 119: [VARS IR141-DIGBY]
CHNL# 118: [VARS IR137-STATIA]
CHNL# 117: [VARS IR114-GLENDHU]
CHNL# 116: [VARS IR84-DALHOUSIE]
CHNL# 115: [VARS IR82_NUTTBY]
CHNL# 114: [VARS IR45_AMHERST]
0.50000
-0.5000
0.0
1.0000
2.0000
3.0000
4.0000
5.0000
6.0000
7.0000
8.0000
9.0000
10.000
TIME (SECONDS)
THU, JAN 29 2009 15:53
NS WIND MV

2013 WINTER PEAK STORA MIN
NS-NB=0; NB-NE=500; CBX=732; ONI=961 ONS=851
1 PHASE FAULT ON BREAKER 104H-600 AT BURNSIDE 138KV
CLEARS BUS; ALL BURNSIDE ON
FILE: e104a-104H-600-1p_mrecl-2013WP-NS-0.out
CHNL# 79: [POWER IR141-DIGBY]
CHNL# 78: [POWER IR137-STATIA]
CHNL# 77: [POWER IR114-GLENDHU]
CHNL# 76: [POWER IR84-DALHOUSIE]
CHNL# 75: [POWER IR82_NUTTBY]
CHNL# 74: [POWER IR45_AMHERST]
1.0000
0.0
1.0000
2.0000
3.0000
4.0000
5.0000
6.0000
7.0000
8.0000
9.0000
10.000
TIME (SECONDS)
THU, JAN 29 2009 15:53
NS WIND MW

2013 WINTER PEAK STORA MIN
NS-NB=0; NB-NE=500; CBX=732; ONI=961 ONS=851
1 PHASE FAULT ON BREAKER 104H-600 AT BURNSIDE 138KV
CLEARS BUS; ALL BURNSIDE ON
FILE: e104a-104H-600-1p_mrecl-2013WP-NS-0.out
CHNL# 133: [VOLT199125 [ONSLOW 345.00]]
CHNL# 132: [VOLT199120 [HOPEWELL 345.00]]
CHNL# 131: [VOLT199045 [WOODBINE345.00]]
CHNL# 130: [VOLT190320 [SALBRY 345.00]]
CHNL# 128: [VOLT190004 [KESWICK 345.00]]
CHNL# 127: [VOLT 70002 [ORRINGTN345.00]]
1.1000
0.90000
0.0
1.0000
2.0000
3.0000
4.0000
5.0000
6.0000
7.0000
8.0000
9.0000
10.000
TIME (SECONDS)
THU, JAN 29 2009 15:53
"345KV VOLTAGE"

2013 WINTER PEAK STORA MIN
NS-NB=0; NB-NE=500; CBX=732; ONI=961 ONS=851
1 PHASE FAULT ON BREAKER 104H-600 AT BURNSIDE 138KV
CLEARS BUS; ALL BURNSIDE ON
FILE: e104a-104H-600-1p_mrecl-2013WP-NS-0.out
CHNL# 125: 60*(1+[FREQ199125 [ONSLOW 345.00]])
CHNL# 124: 60*(1+[FREQ199120 [HOPEWELL 345.00]])
CHNL# 123: 60*(1+[FREQ199045 [WOODBINE345.00]])
CHNL# 122: 60*(1+[FREQ190320 [SALBRY 345.00]])
CHNL# 121: 60*(1+[FREQ190197 [C.COVE 345.00]])
CHNL# 120: 60*(1+[FREQ 70002 [ORRINGTN345.00]])
60.500
59.500
0.0
1.0000
2.0000
3.0000
4.0000
5.0000
6.0000
7.0000
8.0000
9.0000
10.000
TIME (SECONDS)
THU, JAN 29 2009 15:53
FREQUENCY HZ

2013 WINTER PEAK STORA MIN
NS-NB=0; NB-NE=500; CBX=732; ONI=961 ONS=851
1 PHASE FAULT ON BREAKER 104H-600 AT BURNSIDE 138KV
CLEARS BUS; ALL BURNSIDE ON
FILE: e104a-104H-600-1p_nrecf-2013WP-NS-0.out
CHNL# 146: [VOLT199280 [TUSKET A138.00]]
CHNL# 145: [VOLT199193 [HHWAS 138.00]]
CHNL# 144: [VOLT199165 [TUFTCOVE138.00]]
CHNL# 143: [VOLT199138 [SPRNGHLL138.00]]
CHNL# 142: [VOLT199090 [SON-TREN138.00]]
CHNL# 141: [VOLT199051 [HASTINGS138.00]]
1.2000
0.70000
0.0
1.0000
2.0000
3.0000
4.0000
5.0000
6.0000
7.0000
8.0000
9.0000
10.000
TIME (SECONDS)
THU, JAN 29 2009 15:53
138KV BUS VOLTS

2013 WINTER PEAK STORA MIN
NS-NB=0; NB-NE=500; CBX=732; ONI=961 ONS=851
1 PHASE FAULT ON BREAKER 104H-600 AT BURNSIDE 138KV
CLEARS BUS; ALL BURNSIDE ON
FILE: e104a-104H-600-1p_nrecf-2013WP-NS-0.out
CHNL# 140: [VOLT199240 [BWATER A230.00]]
CHNL# 139: [VOLT199200 [BRUSHY 230.00]]
CHNL# 138: [VOLT199130 [ONSLOW 230.00]]
CHNL# 137: [VOLT199050 [HASTINGS230.00]]
CHNL# 136: [VOLT199044 [PT.ACONI230.00]]
CHNL# 135: [VOLT199000 [LINGAN 230.00]]
1.2000
0.70000
0.0
1.0000
2.0000
3.0000
4.0000
5.0000
6.0000
7.0000
8.0000
9.0000
10.000
TIME (SECONDS)
THU, JAN 29 2009 15:53
230KV BUS VOLTS

2013 WINTER PEAK STORA MIN
NS-NB=0; NB-NE=500; CBX=732; ONI=961 ONS=851
1 PHASE FAULT ON BREAKER 104H-600 AT BURNSIDE 138KV
CLEARS BUS; ALL BURNSIDE ON
FILE: e104a-104H-600-1p_nrecf-2013WP-NS-0.out
CHNL# 217: [L6533MW]
CHNL# 215: [L6503MW]
CHNL# 197: [L8003MW]
CHNL# 195: [L8004MW]
CHNL# 193: [L8001MW]
CHNL# 221: [L3001MW]
250.00
500.00
1000.0
0.0
-250.0
-1000.
TIME (SECONDS)
THU, JAN 29 2009 15:53
LINE FLOW MW

2013 WINTER PEAK STORA MIN
NS-NB=0; NB-NE=500; CBX=732; ONI=961 ONS=851
1 PHASE FAULT ON BREAKER 104H-600 AT BURNSIDE 138KV
CLEARS BUS; ALL BURNSIDE ON
FILE: e104a-104H-600-1p_nrecf-2013WP-NS-0.out
CHNL# 154: [IR141-DIGBYH69.0 VOLTS]
CHNL# 153: [IR137-STATIG25.0 VOLTS]
CHNL# 152: [IR114-GLENDH138.0 VOLTS]
CHNL# 151: [IR84-DALHOHV230.0 VOLTS]
CHNL# 150: [IR82_NUTBHV69.0 VOLTS]
CHNL# 149: [IR45_AMHERTP138.0 VOLTS]
1.2000
0.70000
0.0
1.0000
2.0000
3.0000
4.0000
5.0000
6.0000
7.0000
8.0000
9.0000
10.000
TIME (SECONDS)
THU, JAN 29 2009 15:53
WIND BUS VOLTS

2013 WINTER PEAK STORA MIN
NS-NB=0; NB-NE=500; CBX=732; ONI=961 ONS=851
1 PHASE FAULT ON BREAKER 104H-600 AT BURNSIDE 138KV
CLEARS BUS; ALL BURNSIDE OFF
FILE: e104b-104H-600-1p_mrec-2013WP-NS-0.out
CHNL# 20: [ANGL199169 [TUFTCV3 14.400] [3]] [ANGL156661 [DARL G1 22.000] [1]
CHNL# 17: [ANGL199086 [TRENTON613.800] [6]] [ANGL156661 [DARL G1 22.000] [1]
CHNL# 16: [ANGL199085 [TRENTN5 13.800] [5]] [ANGL156661 [DARL G1 22.000] [1]
CHNL# 15: [ANGL199061 [TMP1 STO13.800] [1]] [ANGL156661 [DARL G1 22.000] [1]
CHNL# 13: [ANGL199043 [ACONIG1 20.000] [1]] [ANGL156661 [DARL G1 22.000] [1]
CHNL# 11: [ANGL199001 [LINGAN1 14.400] [1]] [ANGL156661 [DARL G1 22.000] [1]
100.00
-100.0
0.0
1.0000
2.0000
3.0000
4.0000
5.0000
6.0000
7.0000
8.0000
9.0000
10.000
TIME (SECONDS)
THU, JAN 29 2009 15:53
NS ANGLE

2013 WINTER PEAK STORA MIN
NS-NB=0; NB-NE=500; CBX=732; ONI=961 ONS=851
1 PHASE FAULT ON BREAKER 104H-600 AT BURNSIDE 138KV
CLEARS BUS; ALL BURNSIDE OFF
FILE: e104b-104H-600-1p_mrec-2013WP-NS-0.out
CHNL# 10: [ANGL190472 [BLLDNG2 19.000] [1]] [ANGL156661 [DARL G1 22.000] [1]
CHNL# 6: [ANGL190456 [LEPRG1 26.000] [1]] [ANGL156661 [DARL G1 22.000] [1]
CHNL# 5: [ANGL190450 [MACTG1 13.800] [1]] [ANGL156661 [DARL G1 22.000] [1]
CHNL# 3: [ANGL126652 [RAV 3 22.000] [1]] [ANGL156661 [DARL G1 22.000] [1]
CHNL# 2: [ANGL101063 [MYST G7 22.000] [1]] [ANGL156661 [DARL G1 22.000] [1]
CHNL# 7: [ANGL190457 [C.CVG1 19.000] [1]] [ANGL156661 [DARL G1 22.000] [1]
100.00
-100.0
0.0
1.0000
2.0000
3.0000
4.0000
5.0000
6.0000
7.0000
8.0000
9.0000
10.000
TIME (SECONDS)
THU, JAN 29 2009 15:53
"NE,NY,NB ANGLE"

2013 WINTER PEAK STORA MIN
NS-NB=0; NB-NE=500; CBX=732; ONI=961 ONS=851
1 PHASE FAULT ON BREAKER 104H-600 AT BURNSIDE 138KV
CLEARS BUS; ALL BURNSIDE OFF
FILE: e104b-104H-600-1p_mrec-2013WP-NS-0.out
CHNL# 59: [POWER199169 [TUFTCV3 14.400] [3]]
CHNL# 56: [POWER199086 [TRENTON613.800] [6]]
CHNL# 55: [POWER199085 [TRENTN5 13.800] [5]]
CHNL# 54: [POWER199061 [TMP1 STO13.800] [1]]
CHNL# 52: [POWER199043 [ACONIG1 20.000] [1]]
CHNL# 50: [POWER199001 [LINGAN1 14.400] [1]]
2.5000
-1.500
0.0
1.0000
2.0000
3.0000
4.0000
5.0000
6.0000
7.0000
8.0000
9.0000
10.000
TIME (SECONDS)
THU, JAN 29 2009 15:53
NS MW

2013 WINTER PEAK STORA MIN
NS-NB=0; NB-NE=500; CBX=732; ONI=961 ONS=851
1 PHASE FAULT ON BREAKER 104H-600 AT BURNSIDE 138KV
CLEARS BUS; ALL BURNSIDE OFF
FILE: e104b-104H-600-1p_mrec-2013WP-NS-0.out
CHNL# 49: [POWER190472 [BLLDNG2 19.000] [1]]
CHNL# 45: [POWER190456 [LEPRG1 26.000] [1]]
CHNL# 44: [POWER190450 [MACTG1 13.800] [1]]
CHNL# 42: [POWER126652 [RAV 3 22.000] [1]]
CHNL# 41: [POWER101063 [MYST G7 22.000] [1]]
CHNL# 46: [POWER190457 [C.CVG1 19.000] [1]]
7.0000
4.0000
0.0
1.0000
2.0000
3.0000
4.0000
5.0000
6.0000
7.0000
8.0000
9.0000
10.000
TIME (SECONDS)
THU, JAN 29 2009 15:53
"NE,NY,NB POWER"

2013 WINTER PEAK STORA MIN
NS-NB=0; NB-NE=500; CBX=732; ONI=961 ONS=851
1 PHASE FAULT ON BREAKER 104H-600 AT BURNSIDE 138KV
CLEARS BUS; ALL BURNSIDE OFF
FILE: e104b-104H-600-1p_mrecl-2013WP-NS-0.out
CHNL# 119: [VARS IR141-DIGBY]
CHNL# 118: [VARS IR137-STATIA]
CHNL# 117: [VARS IR114-GLENDHU]
CHNL# 116: [VARS IR84-DALHOUSIE]
CHNL# 115: [VARS IR82_NUTTBY]
CHNL# 114: [VARS IR45_AMHERST]
TIME (SECONDS)
THU, JAN 29 2009 15:53
NS WIND MV

2013 WINTER PEAK STORA MIN
NS-NB=0; NB-NE=500; CBX=732; ONI=961 ONS=851
1 PHASE FAULT ON BREAKER 104H-600 AT BURNSIDE 138KV
CLEARS BUS; ALL BURNSIDE OFF
FILE: e104b-104H-600-1p_mrecl-2013WP-NS-0.out
CHNL# 79: [POWER IR141-DIGBY]
CHNL# 78: [POWER IR137-STATIA]
CHNL# 77: [POWER IR114-GLENDHU]
CHNL# 76: [POWER IR84-DALHOUSIE]
CHNL# 75: [POWER IR82_NUTTBY]
CHNL# 74: [POWER IR45_AMHERST]
TIME (SECONDS)
THU, JAN 29 2009 15:53
NS WIND MW

2013 WINTER PEAK STORA MIN
NS-NB=0; NB-NE=500; CBX=732; ONI=961 ONS=851
1 PHASE FAULT ON BREAKER 104H-600 AT BURNSIDE 138KV
CLEARS BUS; ALL BURNSIDE OFF
FILE: e104b-104H-600-1p_mrecl-2013WP-NS-0.out
CHNL# 133: [VOLT199125 [ONSLOW 345.00]]
CHNL# 132: [VOLT199120 [HOPEWELL 345.00]]
CHNL# 131: [VOLT199045 [WOODBINE345.00]]
CHNL# 130: [VOLT190320 [SALBRY 345.00]]
CHNL# 128: [VOLT190004 [KESWICK 345.00]]
CHNL# 127: [VOLT 70002 [ORRINGTN345.00]]
TIME (SECONDS)
THU, JAN 29 2009 15:53
"345KV VOLTAGE"

2013 WINTER PEAK STORA MIN
NS-NB=0; NB-NE=500; CBX=732; ONI=961 ONS=851
1 PHASE FAULT ON BREAKER 104H-600 AT BURNSIDE 138KV
CLEARS BUS; ALL BURNSIDE OFF
FILE: e104b-104H-600-1p_mrecl-2013WP-NS-0.out
CHNL# 125: 60*(1+[FREQ199125 [ONSLOW 345.00]])
CHNL# 124: 60*(1+[FREQ199120 [HOPEWELL 345.00]])
CHNL# 123: 60*(1+[FREQ199045 [WOODBINE345.00]])
CHNL# 122: 60*(1+[FREQ190320 [SALBRY 345.00]])
CHNL# 121: 60*(1+[FREQ190197 [C.COVE 345.00]])
CHNL# 120: 60*(1+[FREQ 70002 [ORRINGTN345.00]])
TIME (SECONDS)
THU, JAN 29 2009 15:53
FREQUENCY HZ

2013 WINTER PEAK STORA MIN
NS-NB=0; NB-NE=500; CBX=732; ONI=961 ONS=851
1 PHASE FAULT ON BREAKER 104H-600 AT BURNSIDE 138KV
CLEARS BUS; ALL BURNSIDE OFF
FILE: e104b-104H-600-1p_mrecf-2013WP-NS-0.out
CHNL# 146: [VOLT199280 [TUSKET A138.00]]
CHNL# 145: [VOLT199193 [1H-WAS 138.00]]
CHNL# 144: [VOLT199165 [TUFTCOVE138.00]]
CHNL# 143: [VOLT199138 [SPRNGHILL138.00]]
CHNL# 142: [VOLT199090 [SON-TREN138.00]]
CHNL# 141: [VOLT199051 [HASTINGS138.00]]
1.2000
0.70000
0.0
1.0000
2.0000
3.0000
4.0000
5.0000
6.0000
7.0000
8.0000
9.0000
10.000
TIME (SECONDS)
THU, JAN 29 2009 15:53
138KV BUS VOLTS

2013 WINTER PEAK STORA MIN
NS-NB=0; NB-NE=500; CBX=732; ONI=961 ONS=851
1 PHASE FAULT ON BREAKER 104H-600 AT BURNSIDE 138KV
CLEARS BUS; ALL BURNSIDE OFF
FILE: e104b-104H-600-1p_mrecf-2013WP-NS-0.out
CHNL# 140: [VOLT199240 [BWATER A230.00]]
CHNL# 139: [VOLT199200 [BRUSHY 230.00]]
CHNL# 138: [VOLT199130 [ONSLOW 230.00]]
CHNL# 137: [VOLT199050 [HASTINGS230.00]]
CHNL# 136: [VOLT199044 [PT.ACONI230.00]]
CHNL# 135: [VOLT199000 [LINGAN 230.00]]
1.2000
0.70000
0.0
1.0000
2.0000
3.0000
4.0000
5.0000
6.0000
7.0000
8.0000
9.0000
10.000
TIME (SECONDS)
THU, JAN 29 2009 15:53
230KV BUS VOLTS

2013 WINTER PEAK STORA MIN
NS-NB=0; NB-NE=500; CBX=732; ONI=961 ONS=851
1 PHASE FAULT ON BREAKER 104H-600 AT BURNSIDE 138KV
CLEARS BUS; ALL BURNSIDE OFF
FILE: e104b-104H-600-1p_mrecf-2013WP-NS-0.out
CHNL# 217: [L6533MWV]
CHNL# 215: [L6503MWV]
CHNL# 197: [L8003MWV]
CHNL# 195: [L8004MWV]
CHNL# 193: [L8001MWV]
CHNL# 221: [L3001MWV]
250.00
500.00
1000.0
0.0
-250.0
-1000.
0.0
1.0000
2.0000
3.0000
4.0000
5.0000
6.0000
7.0000
8.0000
9.0000
10.000
TIME (SECONDS)
THU, JAN 29 2009 15:53
LINE FLOW MW

2013 WINTER PEAK STORA MIN
NS-NB=0; NB-NE=500; CBX=732; ONI=961 ONS=851
1 PHASE FAULT ON BREAKER 104H-600 AT BURNSIDE 138KV
CLEARS BUS; ALL BURNSIDE OFF
FILE: e104b-104H-600-1p_mrecf-2013WP-NS-0.out
CHNL# 154: [IR141-DIGBYH69.0 VOLTS]
CHNL# 153: [IR137-STATIG25.0 VOLTS]
CHNL# 152: [IR114-GLENDH138.0 VOLTS]
CHNL# 151: [IR84-DALHOHV230.0 VOLTS]
CHNL# 150: [IR82-NUTBHV69.0 VOLTS]
CHNL# 149: [IR45-AMHERTP138.0 VOLTS]
1.2000
0.70000
0.0
1.0000
2.0000
3.0000
4.0000
5.0000
6.0000
7.0000
8.0000
9.0000
10.000
TIME (SECONDS)
THU, JAN 29 2009 15:53
WIND BUS VOLTS

2013 WINTER PEAK STORA MIN
NS-NB=0; NB-NE=500; CBX=732; ONI=961 ONS=851
1 PHASE FAULT ON BUS B61 AT HOPEWELL
CLEARS BUS AND TRANSFORMER, OPEN ENDS L8003 TRIP L8004
FILE: g101-79N-B61-SPS_delay_nrecl-2013WP-NS-0.out
CHNL# 20: [ANGL199169 [TUFTCV3 14.400] [3]] [ANGL156661 [DARL G1 22.000] [1]
CHNL# 17: [ANGL199086 [TRENTON613.800] [6]] [ANGL156661 [DARL G1 22.000] [1]
CHNL# 16: [ANGL199085 [TRENTN5 13.800] [5]] [ANGL156661 [DARL G1 22.000] [1]
CHNL# 15: [ANGL199061 [TMP1 STO13.800] [1]] [ANGL156661 [DARL G1 22.000] [1]
CHNL# 13: [ANGL199043 [ACONIG1 20.000] [1]] [ANGL156661 [DARL G1 22.000] [1]
CHNL# 11: [ANGL199001 [LINGAN1 14.400] [1]] [ANGL156661 [DARL G1 22.000] [1]
THU, JAN 29 2009 15:53
TIME (SECONDS)
NS ANGLE

2013 WINTER PEAK STORA MIN
NS-NB=0; NB-NE=500; CBX=732; ONI=961 ONS=851
1 PHASE FAULT ON BUS B61 AT HOPEWELL
CLEARS BUS AND TRANSFORMER, OPEN ENDS L8003 TRIP L8004
FILE: g101-79N-B61-SPS_delay_nrecl-2013WP-NS-0.out
CHNL# 10: [ANGL190472 [BLLDNG2 19.000] [1]] [ANGL156661 [DARL G1 22.000] [1]
CHNL# 6: [ANGL190456 [LEPRG1 26.000] [1]] [ANGL156661 [DARL G1 22.000] [1]
CHNL# 5: [ANGL190450 [MACTG1 13.800] [1]] [ANGL156661 [DARL G1 22.000] [1]
CHNL# 3: [ANGL126652 [RAV 3 22.000] [1]] [ANGL156661 [DARL G1 22.000] [1]
CHNL# 2: [ANGL101063 [MYST G7 22.000] [1]] [ANGL156661 [DARL G1 22.000] [1]
CHNL# 7: [ANGL190457 [C.CVG1 19.000] [1]] [ANGL156661 [DARL G1 22.000] [1]
THU, JAN 29 2009 15:53
TIME (SECONDS)
"NE,NY,NB ANGLE"

2013 WINTER PEAK STORA MIN
NS-NB=0; NB-NE=500; CBX=732; ONI=961 ONS=851
1 PHASE FAULT ON BUS B61 AT HOPEWELL
CLEARS BUS AND TRANSFORMER, OPEN ENDS L8003 TRIP L8004
FILE: g101-79N-B61-SPS_delay_nrecl-2013WP-NS-0.out
CHNL# 59: [POWER199169 [TUFTCV3 14.400] [3]]
CHNL# 56: [POWER199086 [TRENTON613.800] [6]]
CHNL# 55: [POWER199085 [TRENTN5 13.800] [5]]
CHNL# 54: [POWER199061 [TMP1 STO13.800] [1]]
CHNL# 52: [POWER199043 [ACONIG1 20.000] [1]]
CHNL# 50: [POWER199001 [LINGAN1 14.400] [1]]
THU, JAN 29 2009 15:53
TIME (SECONDS)
NS MW

2013 WINTER PEAK STORA MIN
NS-NB=0; NB-NE=500; CBX=732; ONI=961 ONS=851
1 PHASE FAULT ON BUS B61 AT HOPEWELL
CLEARS BUS AND TRANSFORMER, OPEN ENDS L8003 TRIP L8004
FILE: g101-79N-B61-SPS_delay_nrecl-2013WP-NS-0.out
CHNL# 49: [POWER190472 [BLLDNG2 19.000] [1]]
CHNL# 45: [POWER190456 [LEPRG1 26.000] [1]]
CHNL# 44: [POWER190450 [MACTG1 13.800] [1]]
CHNL# 42: [POWER126652 [RAV 3 22.000] [1]]
CHNL# 41: [POWER101063 [MYST G7 22.000] [1]]
CHNL# 46: [POWER190457 [C.CVG1 19.000] [1]]
THU, JAN 29 2009 15:53
TIME (SECONDS)
"NE,NY,NB POWER"

2013 WINTER PEAK STORA MIN
NS-NB=0; NB-NE=500; CBX=732; ONI=961 ONS=851
1 PHASE FAULT ON BUS B61 AT HOPEWELL
CLEARS BUS AND TRANSFORMER, OPEN ENDS L8003 TRIP L8004
FILE: g101-79N-B61-SPS_delay_nrecl-2013WP-NS-0.out
CHNL# 119: [VARS IR141-DIGBY] 0.50000 -0.5000
CHNL# 118: [VARS IR137-STATIA] 0.50000 -0.5000
CHNL# 117: [VARS IR114-GLENDHU] 0.50000 -0.5000
CHNL# 116: [VARS IR84-DALHOUSIE] 0.50000 -0.5000
CHNL# 115: [VARS IR82_NUTTBY] 0.50000 -0.5000
CHNL# 114: [VARS IR45_AMHERST] 0.50000 -0.5000
0.0 1.0000 2.0000 3.0000 4.0000 5.0000 6.0000 7.0000 8.0000 9.0000 10.000
TIME (SECONDS)
THU, JAN 29 2009 15:53
NS WIND MV

2013 WINTER PEAK STORA MIN
NS-NB=0; NB-NE=500; CBX=732; ONI=961 ONS=851
1 PHASE FAULT ON BUS B61 AT HOPEWELL
CLEARS BUS AND TRANSFORMER, OPEN ENDS L8003 TRIP L8004
FILE: g101-79N-B61-SPS_delay_nrecl-2013WP-NS-0.out
CHNL# 79: [POWER IR141-DIGBY] 1.0000 0.0
CHNL# 78: [POWER IR137-STATIA] 1.0000 0.0
CHNL# 77: [POWER IR114-GLENDHU] 1.0000 0.0
CHNL# 76: [POWER IR84-DALHOUSIE] 1.0000 0.0
CHNL# 75: [POWER IR82_NUTTBY] 1.0000 0.0
CHNL# 74: [POWER IR45_AMHERST] 1.0000 0.0
0.0 1.0000 2.0000 3.0000 4.0000 5.0000 6.0000 7.0000 8.0000 9.0000 10.000
TIME (SECONDS)
THU, JAN 29 2009 15:53
NS WIND MW

2013 WINTER PEAK STORA MIN
NS-NB=0; NB-NE=500; CBX=732; ONI=961 ONS=851
1 PHASE FAULT ON BUS B61 AT HOPEWELL
CLEARS BUS AND TRANSFORMER, OPEN ENDS L8003 TRIP L8004
FILE: g101-79N-B61-SPS_delay_nrecl-2013WP-NS-0.out
CHNL# 133: [VOLT199125 IONSLOW 345.00] 1.1000 0.90000
CHNL# 132: [VOLT199120 IHOPEWELL345.00] 1.1000 0.90000
CHNL# 131: [VOLT199045 IWOODBINE345.00] 1.1000 0.90000
CHNL# 130: [VOLT190320 ISALBRY 345.00] 1.1000 0.90000
CHNL# 128: [VOLT190004 IKESWICK 345.00] 1.1000 0.90000
CHNL# 127: [VOLT 70002 IORRINGTN345.00] 1.1000 0.90000
0.0 1.0000 2.0000 3.0000 4.0000 5.0000 6.0000 7.0000 8.0000 9.0000 10.000
TIME (SECONDS)
THU, JAN 29 2009 15:53
"345KV VOLTAGE"

2013 WINTER PEAK STORA MIN
NS-NB=0; NB-NE=500; CBX=732; ONI=961 ONS=851
1 PHASE FAULT ON BUS B61 AT HOPEWELL
CLEARS BUS AND TRANSFORMER, OPEN ENDS L8003 TRIP L8004
FILE: g101-79N-B61-SPS_delay_nrecl-2013WP-NS-0.out
CHNL# 125: 60*(1+[FREQ199125 IONSLOW 345.00]) 60.500 59.500
CHNL# 124: 60*(1+[FREQ199120 IHOPEWELL345.00]) 60.500 59.500
CHNL# 123: 60*(1+[FREQ199045 IWOODBINE345.00]) 60.500 59.500
CHNL# 122: 60*(1+[FREQ190320 ISALBRY 345.00]) 60.500 59.500
CHNL# 121: 60*(1+[FREQ190197 IC.COVE 345.00]) 60.500 59.500
CHNL# 120: 60*(1+[FREQ 70002 IORRINGTN345.00]) 60.500 59.500
0.0 1.0000 2.0000 3.0000 4.0000 5.0000 6.0000 7.0000 8.0000 9.0000 10.000
TIME (SECONDS)
THU, JAN 29 2009 15:53
FREQUENCY HZ

2013 WINTER PEAK STORA MIN
NS-NB=0; NB-NE=500; CBX=732; ONI=961 ONS=851
1 PHASE FAULT ON BUS B61 AT HOPEWELL
CLEARS BUS AND TRANSFORMER, OPEN ENDS L8003 TRIP L8004
FILE: g101-79N-B61-SPS_delay_nrecl-2013WP-NS-0.out
CHNL# 146: [VOLT199280 [TUSKET A138.00]]
CHNL# 145: [VOLT199193 [HHWAS 138.00]]
CHNL# 144: [VOLT199165 [TUFTCOVE138.00]]
CHNL# 143: [VOLT199138 [SPRNGHLL138.00]]
CHNL# 142: [VOLT199090 [50N-TREN138.00]]
CHNL# 141: [VOLT199051 [HASTINGS138.00]]
1.2000
0.70000
0.0
1.0000
2.0000
3.0000
4.0000
5.0000
6.0000
7.0000
8.0000
9.0000
10.000
TIME (SECONDS)
THU, JAN 29 2009 15:53
138KV BUS VOLTS

2013 WINTER PEAK STORA MIN
NS-NB=0; NB-NE=500; CBX=732; ONI=961 ONS=851
1 PHASE FAULT ON BUS B61 AT HOPEWELL
CLEARS BUS AND TRANSFORMER, OPEN ENDS L8003 TRIP L8004
FILE: g101-79N-B61-SPS_delay_nrecl-2013WP-NS-0.out
CHNL# 140: [VOLT199240 [BWATER A230.00]]
CHNL# 139: [VOLT199200 [BRUSHY 230.00]]
CHNL# 138: [VOLT199130 [ONSLOW 230.00]]
CHNL# 137: [VOLT199050 [HASTINGS230.00]]
CHNL# 136: [VOLT199044 [PT.ACONI230.00]]
CHNL# 135: [VOLT199000 [LINGAN 230.00]]
1.2000
0.70000
0.0
1.0000
2.0000
3.0000
4.0000
5.0000
6.0000
7.0000
8.0000
9.0000
10.000
TIME (SECONDS)
THU, JAN 29 2009 15:53
230KV BUS VOLTS

2013 WINTER PEAK STORA MIN
NS-NB=0; NB-NE=500; CBX=732; ONI=961 ONS=851
1 PHASE FAULT ON BUS B61 AT HOPEWELL
CLEARS BUS AND TRANSFORMER, OPEN ENDS L8003 TRIP L8004
FILE: g101-79N-B61-SPS_delay_nrecl-2013WP-NS-0.out
CHNL# 217: [L6533MW]
CHNL# 215: [L6503MW]
CHNL# 197: [L8003MW]
CHNL# 195: [L8004MW]
CHNL# 193: [L8001MW]
CHNL# 221: [L3001MW]
250.00
500.00
1000.0
0.0
-250.0
-1000.
0.0
1.0000
2.0000
3.0000
4.0000
5.0000
6.0000
7.0000
8.0000
9.0000
10.000
TIME (SECONDS)
THU, JAN 29 2009 15:53
LINE FLOW MW

2013 WINTER PEAK STORA MIN
NS-NB=0; NB-NE=500; CBX=732; ONI=961 ONS=851
1 PHASE FAULT ON BUS B61 AT HOPEWELL
CLEARS BUS AND TRANSFORMER, OPEN ENDS L8003 TRIP L8004
FILE: g101-79N-B61-SPS_delay_nrecl-2013WP-NS-0.out
CHNL# 154: [IR141-DIGBYH69.0 VOLTS]
CHNL# 153: [IR137-STATIG25.0 VOLTS]
CHNL# 152: [IR114-GLENDH138.0 VOLTS]
CHNL# 151: [IR84-DALHOHV230.0 VOLTS]
CHNL# 150: [IR82 NUTBHV69.0 VOLTS]
CHNL# 149: [IR45 AMHERTP138.0 VOLTS]
1.2000
0.70000
0.0
1.0000
2.0000
3.0000
4.0000
5.0000
6.0000
7.0000
8.0000
9.0000
10.000
TIME (SECONDS)
THU, JAN 29 2009 15:53
WIND BUS VOLTS

2013 WINTER PEAK WITH DSM - DELIVER RESERVE
NS-NB=200; NB-NE=500; CBX=790; ONI=1015 ONS=704
3 PHASE FAULT ON L8003 AT HOPEWELL 345KV
CLEARED IN 4.5 CYCLES: SPS DROPS LINGAN 2
FILE: a07.1s-3p_8003_79n-2013WP-DSM-NS-200.out
CHNL#S 20.4: [ANGL199169 [TUFTCV3 14.400] [3]] [ANGL156661 [DARL G1 22.000] [1]
CHNL#S 17.4: [ANGL199086 [TRENTON613.800] [6]] [ANGL156661 [DARL G1 22.000] [1]
CHNL#S 16.4: [ANGL199085 [TRENTN5 13.800] [5]] [ANGL156661 [DARL G1 22.000] [1]
CHNL#S 15.4: [ANGL199061 [TMP1 STO13.800] [1]] [ANGL156661 [DARL G1 22.000] [1]
CHNL#S 13.4: [ANGL199043 [ACONIG1 20.000] [1]] [ANGL156661 [DARL G1 22.000] [1]
CHNL#S 11.4: [ANGL199001 [LINGAN1 14.400] [1]] [ANGL156661 [DARL G1 22.000] [1]
TIME (SECONDS)
SAT, JAN 31 2009 15:39
NS ANGLE

2013 WINTER PEAK WITH DSM - DELIVER RESERVE
NS-NB=200; NB-NE=500; CBX=790; ONI=1015 ONS=704
3 PHASE FAULT ON L8003 AT HOPEWELL 345KV
CLEARED IN 4.5 CYCLES: SPS DROPS LINGAN 2
FILE: a07.1s-3p_8003_79n-2013WP-DSM-NS-200.out
CHNL#S 10.4: [ANGL190472 [BLLDNG2 19.000] [1]] [ANGL156661 [DARL G1 22.000] [1]
CHNL#S 6.4: [ANGL190456 [LEPRG1 26.000] [1]] [ANGL156661 [DARL G1 22.000] [1]
CHNL#S 5.4: [ANGL190450 [MACTG1 13.800] [1]] [ANGL156661 [DARL G1 22.000] [1]
CHNL#S 3.4: [ANGL126652 [RAV 3 22.000] [1]] [ANGL156661 [DARL G1 22.000] [1]
CHNL#S 2.4: [ANGL101063 [MYST G7 22.000] [1]] [ANGL156661 [DARL G1 22.000] [1]
CHNL#S 1.4: [ANGL100060 [MIS GT1 18.000] [1]] [ANGL156661 [DARL G1 22.000] [1]
TIME (SECONDS)
SAT, JAN 31 2009 15:39
"NE,NY,NB ANGLE"

2013 WINTER PEAK WITH DSM - DELIVER RESERVE
NS-NB=200; NB-NE=500; CBX=790; ONI=1015 ONS=704
3 PHASE FAULT ON L8003 AT HOPEWELL 345KV
CLEARED IN 4.5 CYCLES: SPS DROPS LINGAN 2
FILE: a07.1s-3p_8003_79n-2013WP-DSM-NS-200.out
CHNL# 59: [POWER199169 [TUFTCV3 14.400] [3]]
CHNL# 56: [POWER199086 [TRENTON613.800] [6]]
CHNL# 55: [POWER199085 [TRENTN5 13.800] [5]]
CHNL# 54: [POWER199061 [TMP1 STO13.800] [1]]
CHNL# 52: [POWER199043 [ACONIG1 20.000] [1]]
CHNL# 50: [POWER199001 [LINGAN1 14.400] [1]]
TIME (SECONDS)
SAT, JAN 31 2009 15:39
NS MW

2013 WINTER PEAK WITH DSM - DELIVER RESERVE
NS-NB=200; NB-NE=500; CBX=790; ONI=1015 ONS=704
3 PHASE FAULT ON L8003 AT HOPEWELL 345KV
CLEARED IN 4.5 CYCLES: SPS DROPS LINGAN 2
FILE: a07.1s-3p_8003_79n-2013WP-DSM-NS-200.out
CHNL# 49: [POWER190472 [BLLDNG2 19.000] [1]]
CHNL# 45: [POWER190456 [LEPRG1 26.000] [1]]
CHNL# 44: [POWER190450 [MACTG1 13.800] [1]]
CHNL# 42: [POWER126652 [RAV 3 22.000] [1]]
CHNL# 41: [POWER101063 [MYST G7 22.000] [1]]
CHNL# 40: [POWER100060 [MIS GT1 18.000] [1]]
TIME (SECONDS)
SAT, JAN 31 2009 15:39
"NE,NY,NB POWER"

2013 WINTER PEAK WITH DSM - DELIVER RESERVE
NS-NB=200; NB-NE=500; CBX=790; ONI=1015 ONS=704
3 PHASE FAULT ON L8003 AT HOPEWELL 345KV
CLEARED IN 4.5 CYCLES: SPS DROPS LINGAN 2
FILE: a07.1s-3p_8003_79n-2013WP-DSM-NS-200.out
CHNL# 119: [VARS IR141-DIGBY]
CHNL# 118: [VARS IR137-STATIA]
CHNL# 117: [VARS IR114-GLENDHU]
CHNL# 116: [VARS IR84-DALHOUSIE]
CHNL# 115: [VARS IR82_NUTTBY]
CHNL# 114: [VARS IR45_AMHERST]
0.50000
-0.5000
0.0
1.0000
2.0000
3.0000
4.0000
5.0000
6.0000
7.0000
8.0000
9.0000
10.000
TIME (SECONDS)
SAT, JAN 31 2009 15:40
NS WIND MV

2013 WINTER PEAK WITH DSM - DELIVER RESERVE
NS-NB=200; NB-NE=500; CBX=790; ONI=1015 ONS=704
3 PHASE FAULT ON L8003 AT HOPEWELL 345KV
CLEARED IN 4.5 CYCLES: SPS DROPS LINGAN 2
FILE: a07.1s-3p_8003_79n-2013WP-DSM-NS-200.out
CHNL# 133: [VOLT199125 IONSLOW 345.00]
CHNL# 132: [VOLT199120 IHOPEWELL345.00]
CHNL# 131: [VOLT199045 IWOODBINE345.00]
CHNL# 130: [VOLT190320 ISALBRY 345.00]
CHNL# 128: [VOLT190004 IKESWICK 345.00]
CHNL# 127: [VOLT 70002 IORRINGTN345.00]
1.1000
0.90000
0.0
1.0000
2.0000
3.0000
4.0000
5.0000
6.0000
7.0000
8.0000
9.0000
10.000
TIME (SECONDS)
SAT, JAN 31 2009 15:40
"345KV VOLTAGE"

2013 WINTER PEAK WITH DSM - DELIVER RESERVE
NS-NB=200; NB-NE=500; CBX=790; ONI=1015 ONS=704
3 PHASE FAULT ON L8003 AT HOPEWELL 345KV
CLEARED IN 4.5 CYCLES: SPS DROPS LINGAN 2
FILE: a07.1s-3p_8003_79n-2013WP-DSM-NS-200.out
CHNL# 79: [POWER IR141-DIGBY]
CHNL# 78: [POWER IR137-STATIA]
CHNL# 77: [POWER IR114-GLENDHU]
CHNL# 76: [POWER IR84-DALHOUSIE]
CHNL# 75: [POWER IR82_NUTTBY]
CHNL# 74: [POWER IR45_AMHERST]
1.0000
0.0
0.0
1.0000
2.0000
3.0000
4.0000
5.0000
6.0000
7.0000
8.0000
9.0000
10.000
TIME (SECONDS)
SAT, JAN 31 2009 15:39
NS WIND MW

2013 WINTER PEAK WITH DSM - DELIVER RESERVE
NS-NB=200; NB-NE=500; CBX=790; ONI=1015 ONS=704
3 PHASE FAULT ON L8003 AT HOPEWELL 345KV
CLEARED IN 4.5 CYCLES: SPS DROPS LINGAN 2
FILE: a07.1s-3p_8003_79n-2013WP-DSM-NS-200.out
CHNL# 125: 60*(1+[FREQ199125 IONSLOW 345.00])
CHNL# 124: 60*(1+[FREQ199120 IHOPEWELL345.00])
CHNL# 123: 60*(1+[FREQ199045 IWOODBINE345.00])
CHNL# 122: 60*(1+[FREQ190320 ISALBRY 345.00])
CHNL# 121: 60*(1+[FREQ190197 IC.COVE 345.00])
CHNL# 120: 60*(1+[FREQ 70002 IORRINGTN345.00])
60.500
59.500
0.0
1.0000
2.0000
3.0000
4.0000
5.0000
6.0000
7.0000
8.0000
9.0000
10.000
TIME (SECONDS)
SAT, JAN 31 2009 15:40
FREQUENCY HZ

2013 WINTER PEAK WITH DSM - DELIVER RESERVE
NS-NB=200; NB-NE=500; CBX=790; ONI=1015 ONS=704
3 PHASE FAULT ON L8003 AT HOPEWELL 345KV
CLEARED IN 4.5 CYCLES: SPS DROPS LINGAN 2
FILE: a07.1s-3p_8003_79n-2013WP-DSM-NS-200.out
CHNL# 146: [VOLT199280 [TUSKET A138.00]]
CHNL# 145: [VOLT199193 [HHWAS 138.00]]
CHNL# 144: [VOLT199165 [TUFTCOVE138.00]]
CHNL# 143: [VOLT199138 [SPRNGHIL138.00]]
CHNL# 142: [VOLT199090 [50N-TREN138.00]]
CHNL# 141: [VOLT199051 [HASTINGS138.00]]
1.2000
0.70000
0.0
1.0000
2.0000
3.0000
4.0000
5.0000
6.0000
7.0000
8.0000
9.0000
10.000
TIME (SECONDS)
SAT, JAN 31 2009 15:40
138KV BUS VOLTS

2013 WINTER PEAK WITH DSM - DELIVER RESERVE
NS-NB=200; NB-NE=500; CBX=790; ONI=1015 ONS=704
3 PHASE FAULT ON L8003 AT HOPEWELL 345KV
CLEARED IN 4.5 CYCLES: SPS DROPS LINGAN 2
FILE: a07.1s-3p_8003_79n-2013WP-DSM-NS-200.out
CHNL# 140: [VOLT199240 [BWATER A230.00]]
CHNL# 139: [VOLT199200 [BRUSHY 230.00]]
CHNL# 138: [VOLT199130 [ONSLOW 230.00]]
CHNL# 137: [VOLT199050 [HASTINGS230.00]]
CHNL# 136: [VOLT199044 [PT.ACONI230.00]]
CHNL# 135: [VOLT199000 [LINGAN 230.00]]
1.2000
0.70000
0.0
1.0000
2.0000
3.0000
4.0000
5.0000
6.0000
7.0000
8.0000
9.0000
10.000
TIME (SECONDS)
SAT, JAN 31 2009 15:40
230KV BUS VOLTS

2013 WINTER PEAK WITH DSM - DELIVER RESERVE
NS-NB=200; NB-NE=500; CBX=790; ONI=1015 ONS=704
3 PHASE FAULT ON L8003 AT HOPEWELL 345KV
CLEARED IN 4.5 CYCLES: SPS DROPS LINGAN 2
FILE: a07.1s-3p_8003_79n-2013WP-DSM-NS-200.out
CHNL# 217: [L6513NMW]
CHNL# 215: [L6503MW1]
CHNL# 197: [L8003MW1]
CHNL# 195: [L8004MW1]
CHNL# 193: [L8001MW1]
CHNL# 221: [L3001MW1]
250.00
-250.0
500.00
0.0
1000.0
-1000.
0.0
1.0000
2.0000
3.0000
4.0000
5.0000
6.0000
7.0000
8.0000
9.0000
10.000
TIME (SECONDS)
SAT, JAN 31 2009 15:40
LINE FLOW MW

2013 WINTER PEAK WITH DSM - DELIVER RESERVE
NS-NB=200; NB-NE=500; CBX=790; ONI=1015 ONS=704
3 PHASE FAULT ON L8003 AT HOPEWELL 345KV
CLEARED IN 4.5 CYCLES: SPS DROPS LINGAN 2
FILE: a07.1s-3p_8003_79n-2013WP-DSM-NS-200.out
CHNL# 154: [IR141-DIGBYH69.0 VOLTS]
CHNL# 153: [IR137-STATIG25.0 VOLTS]
CHNL# 152: [IR114-GLENDH138.0 VOLTS]
CHNL# 151: [IR84-DALHOHV230.0 VOLTS]
CHNL# 150: [IR82_NUTBHV69.0 VOLTS]
CHNL# 149: [IR45_AMHERTP138.0 VOLTS]
1.2000
0.70000
0.0
1.0000
2.0000
3.0000
4.0000
5.0000
6.0000
7.0000
8.0000
9.0000
10.000
TIME (SECONDS)
SAT, JAN 31 2009 15:40
WIND BUS VOLTS

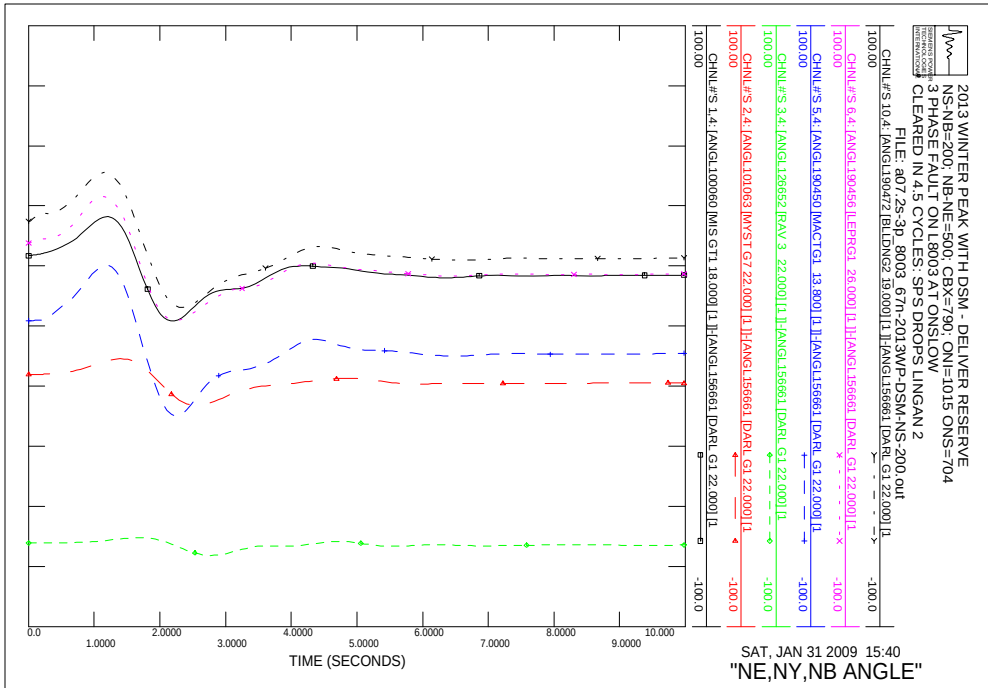
2013 WINTER PEAK WITH DSM - DELIVER RESERVE
NS-NB=200; NB-NE=500; CBX=790; ONI=1015 ONS=704
3 PHASE FAULT ON L8003 AT ONSLOW
CLEARED IN 4.5 CYCLES: SPS DROPS LINGAN 2
FILE: a07.2s-3p_8003_67n-2013WP-DSM-NS-200.out
CHNL#'S 10,4: [ANGL190472 [BLLDNG2 19.000] [1]]-[ANGL156661 [DARL G1 22.000] [1
CHNL#'S 6,4: [ANGL190456 [LEPRG1 26.000] [1]]-[ANGL156661 [DARL G1 22.000] [1
CHNL#'S 5,4: [ANGL190450 [MACTG1 13.800] [1]]-[ANGL156661 [DARL G1 22.000] [1
CHNL#'S 3,4: [ANGL126652 [RAV 3 22.000] [1]]-[ANGL156661 [DARL G1 22.000] [1
CHNL#'S 2,4: [ANGL101063 [MYST G7 22.000] [1]]-[ANGL156661 [DARL G1 22.000] [1
CHNL#'S 1,4: [ANGL100060 [MIS GT1 18.000] [1]]-[ANGL156661 [DARL G1 22.000] [1
TIME (SECONDS)
SAT, JAN 31 2009 15:40
"NE,NY,NB ANGLE"

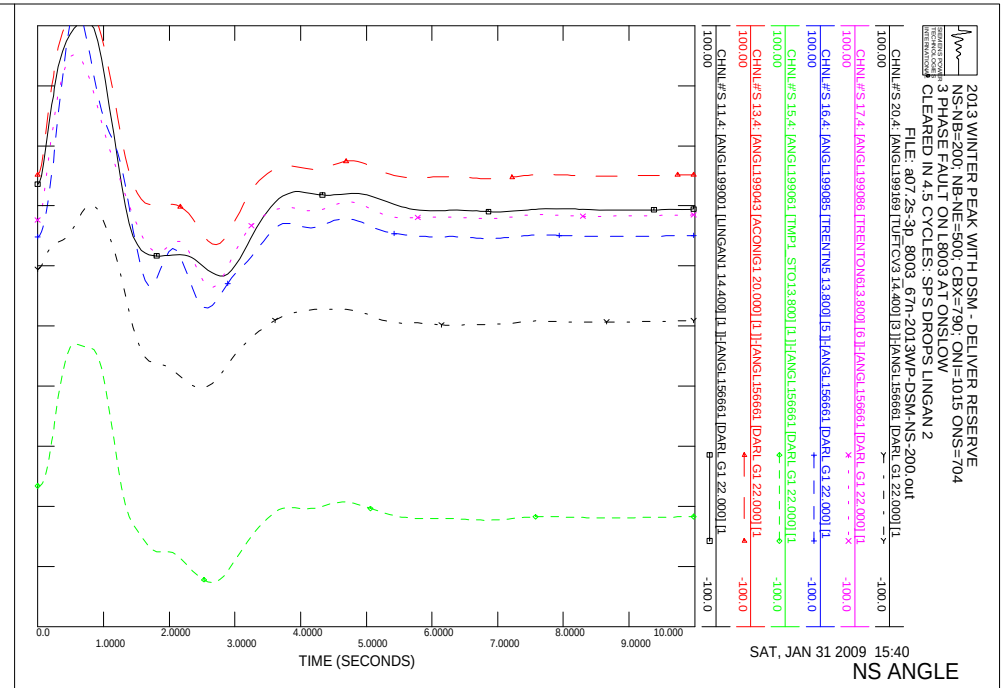
2013 WINTER PEAK WITH DSM - DELIVER RESERVE
NS-NB=200; NB-NE=500; CBX=790; ONI=1015 ONS=704
3 PHASE FAULT ON L8003 AT ONSLOW
CLEARED IN 4.5 CYCLES: SPS DROPS LINGAN 2
FILE: a07.2s-3p_8003_67n-2013WP-DSM-NS-200.out
CHNL#'S 20,4: [ANGL199169 [TUFTCV3 14.400] [3]]-[ANGL156661 [DARL G1 22.000] [1
CHNL#'S 17,4: [ANGL199086 [TRENTON613.800] [6]]-[ANGL156661 [DARL G1 22.000] [1
CHNL#'S 16,4: [ANGL199085 [TRENTN5 13.800] [5]]-[ANGL156661 [DARL G1 22.000] [1
CHNL#'S 15,4: [ANGL199061 [TMP1 STO13.800] [1]]-[ANGL156661 [DARL G1 22.000] [1
CHNL#'S 13,4: [ANGL199043 [ACONIG1 20.000] [1]]-[ANGL156661 [DARL G1 22.000] [1
CHNL#'S 11,4: [ANGL199001 [LINGAN1 14.400] [1]]-[ANGL156661 [DARL G1 22.000] [1
TIME (SECONDS)
SAT, JAN 31 2009 15:40
NS ANGLE

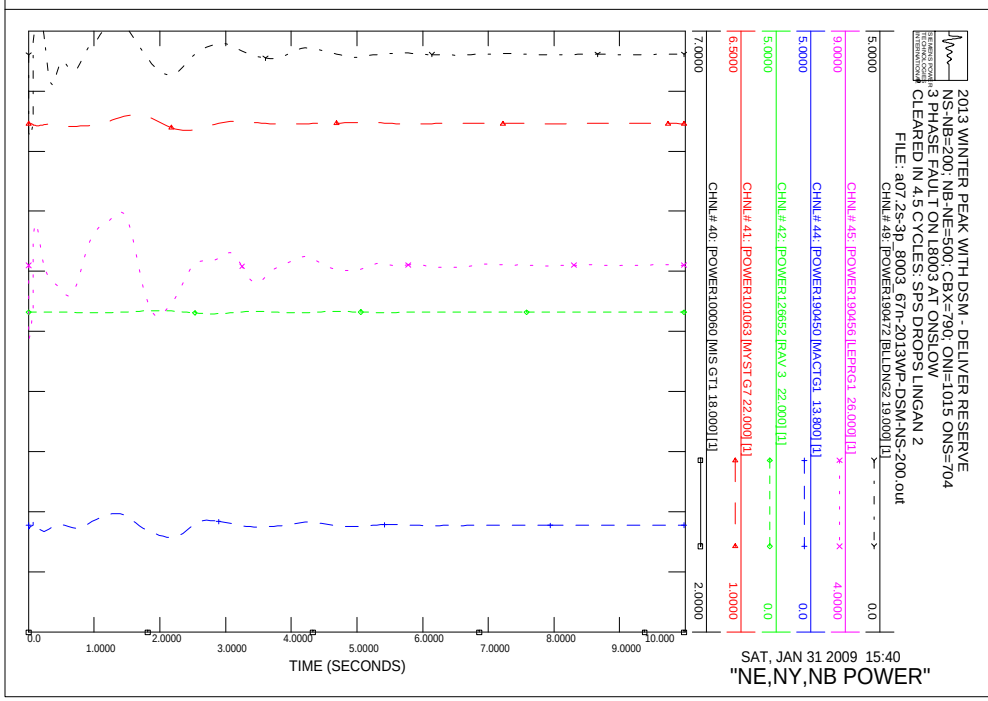
2013 WINTER PEAK WITH DSM - DELIVER RESERVE
NS-NB=200; NB-NE=500; CBX=790; ONI=1015 ONS=704
3 PHASE FAULT ON L8003 AT ONSLOW
CLEARED IN 4.5 CYCLES: SPS DROPS LINGAN 2
FILE: a07.2s-3p_8003_67n-2013WP-DSM-NS-200.out
CHNL# 49: [POWER190472 [BLLDNG2 19.000] [1]
CHNL# 45: [POWER190456 [LEPRG1 26.000] [1]
CHNL# 44: [POWER190450 [MACTG1 13.800] [1]
CHNL# 42: [POWER126652 [RAV 3 22.000] [1]
CHNL# 41: [POWER101063 [MYST G7 22.000] [1]
CHNL# 40: [POWER100060 [MIS GT1 18.000] [1]
TIME (SECONDS)
SAT, JAN 31 2009 15:40
"NE,NY,NB POWER"

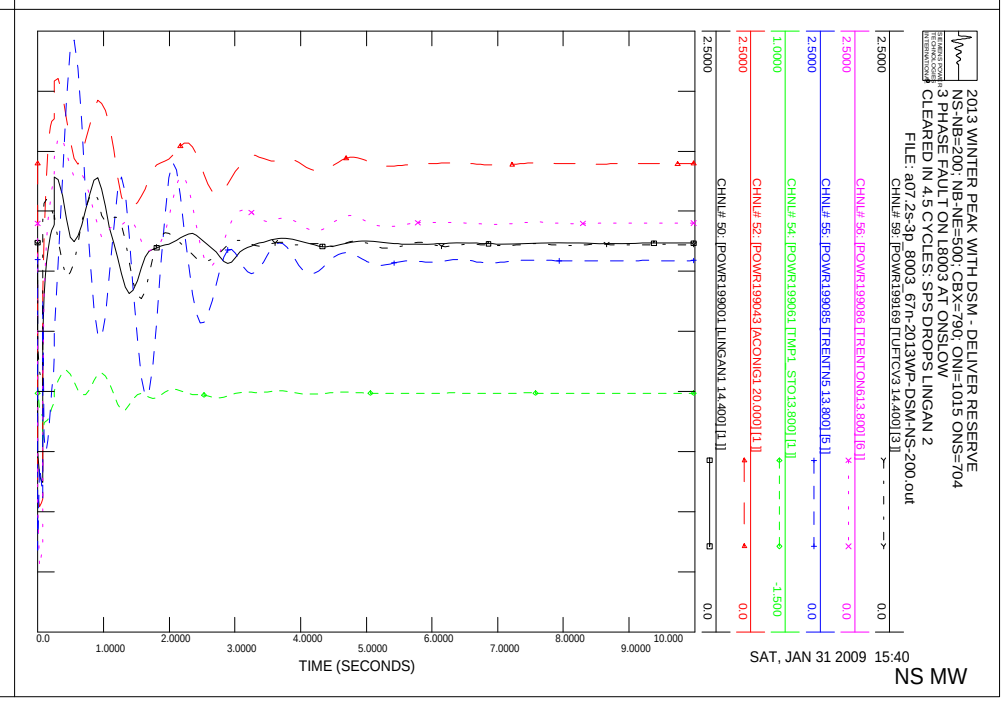
2013 WINTER PEAK WITH DSM - DELIVER RESERVE
NS-NB=200; NB-NE=500; CBX=790; ONI=1015 ONS=704
3 PHASE FAULT ON L8003 AT ONSLOW
CLEARED IN 4.5 CYCLES: SPS DROPS LINGAN 2
FILE: a07.2s-3p_8003_67n-2013WP-DSM-NS-200.out
CHNL# 59: [POWR199169 [TUFTCV3 14.400] [3]]
CHNL# 56: [POWR199086 [TRENTON613.800] [6]]
CHNL# 55: [POWR199085 [TRENTN5 13.800] [5]]
CHNL# 54: [POWR199061 [TMP1 STO13.800] [1]]
CHNL# 52: [POWR199043 [ACONIG1 20.000] [1]]
CHNL# 50: [POWR199001 [LINGAN1 14.400] [1]]
TIME (SECONDS)
SAT, JAN 31 2009 15:40
NS MW

2013 WINTER PEAK WITH DSM - DELIVER RESERVE
NS-NB=200; NB-NE=500; CBX=790; ONI=1015 ONS=704
3 PHASE FAULT ON L8003 AT ONSLOW
CLEARED IN 4.5 CYCLES: SPS DROPS LINGAN 2
FILE: a07.2s-3p_8003_67n-2013WP-DSM-NS-200.out
CHNL# 119: [VARS IR141-DIGBY]
CHNL# 118: [VARS IR137-STATIA]
CHNL# 117: [VARS IR114-GLENDHU]
CHNL# 116: [VARS IR84-DALHOUSIE]
CHNL# 115: [VARS IR82_NUTTBY]
CHNL# 114: [VARS IR45_AMHERST]
TIME (SECONDS)
SAT, JAN 31 2009 15:40
NS WIND MV

2013 WINTER PEAK WITH DSM - DELIVER RESERVE
NS-NB=200; NB-NE=500; CBX=790; ONI=1015 ONS=704
3 PHASE FAULT ON L8003 AT ONSLOW
CLEARED IN 4.5 CYCLES: SPS DROPS LINGAN 2
FILE: a07.2s-3p_8003_67n-2013WP-DSM-NS-200.out
CHNL# 79: [POWER IR141-DIGBY]
CHNL# 78: [POWER IR137-STATIA]
CHNL# 77: [POWER IR114-GLENDHU]
CHNL# 76: [POWER IR84-DALHOUSIE]
CHNL# 75: [POWER IR82_NUTTBY]
CHNL# 74: [POWER IR45_AMHERST]
TIME (SECONDS)
SAT, JAN 31 2009 15:40
NS WIND MW

2013 WINTER PEAK WITH DSM - DELIVER RESERVE
NS-NB=200; NB-NE=500; CBX=790; ONI=1015 ONS=704
3 PHASE FAULT ON L8003 AT ONSLOW
CLEARED IN 4.5 CYCLES: SPS DROPS LINGAN 2
FILE: a07.2s-3p_8003_67n-2013WP-DSM-NS-200.out
CHNL# 133: [VOLT199125 [ONSLOW 345.00]]
CHNL# 132: [VOLT199120 [HOPEWELL 345.00]]
CHNL# 131: [VOLT199045 [WOODBINE345.00]]
CHNL# 130: [VOLT190320 [SALBRY 345.00]]
CHNL# 128: [VOLT190004 [KESWICK 345.00]]
CHNL# 127: [VOLT 70002 [ORRINGTN345.00]]
TIME (SECONDS)
SAT, JAN 31 2009 15:40
"345KV VOLTAGE"

2013 WINTER PEAK WITH DSM - DELIVER RESERVE
NS-NB=200; NB-NE=500; CBX=790; ONI=1015 ONS=704
3 PHASE FAULT ON L8003 AT ONSLOW
CLEARED IN 4.5 CYCLES: SPS DROPS LINGAN 2
FILE: a07.2s-3p_8003_67n-2013WP-DSM-NS-200.out
CHNL# 125: 60*(1+[FREQ199125 [ONSLOW 345.00]])
CHNL# 124: 60*(1+[FREQ199120 [HOPEWELL 345.00]])
CHNL# 123: 60*(1+[FREQ199045 [WOODBINE345.00]])
CHNL# 122: 60*(1+[FREQ190320 [SALBRY 345.00]])
CHNL# 121: 60*(1+[FREQ190197 [C.COVE 345.00]])
CHNL# 120: 60*(1+[FREQ 70002 [ORRINGTN345.00]])
TIME (SECONDS)
SAT, JAN 31 2009 15:40
FREQUENCY HZ

2013 WINTER PEAK WITH DSM - DELIVER RESERVE
NS-NB=200; NB-NE=500; CBX=790; ONI=1015 ONS=704
3 PHASE FAULT ON L8003 AT ONSLOW
CLEARED IN 4.5 CYCLES: SPS DROPS LINGAN 2
FILE: a07.2s-3p_8003_67n-2013WP-DSM-NS-200.out
CHNL# 146: [VOLT199280 [TUSKET A138.00]]
CHNL# 145: [VOLT199193 [HHWAS 138.00]]
CHNL# 144: [VOLT199165 [TUFTCOVE138.00]]
CHNL# 143: [VOLT199138: [SPRNGHILL138.00]]
CHNL# 142: [VOLT199090 [SON-TREN138.00]]
CHNL# 141: [VOLT199051 [HASTINGS138.00]]
1.2000
0.70000
0.0
1.0000
2.0000
3.0000
4.0000
5.0000
6.0000
7.0000
8.0000
9.0000
10.000
TIME (SECONDS)
SAT, JAN 31 2009 15:40
138KV BUS VOLTS

2013 WINTER PEAK WITH DSM - DELIVER RESERVE
NS-NB=200; NB-NE=500; CBX=790; ONI=1015 ONS=704
3 PHASE FAULT ON L8003 AT ONSLOW
CLEARED IN 4.5 CYCLES: SPS DROPS LINGAN 2
FILE: a07.2s-3p_8003_67n-2013WP-DSM-NS-200.out
CHNL# 140: [VOLT199240 [BWATER A230.00]]
CHNL# 139: [VOLT199200 [BRUSHY 230.00]]
CHNL# 138: [VOLT199130 [ONSLOW 230.00]]
CHNL# 137: [VOLT199050 [HASTINGS230.00]]
CHNL# 136: [VOLT199044 [PT.ACONI230.00]]
CHNL# 135: [VOLT199000 [LINGAN 230.00]]
1.2000
0.70000
0.0
1.0000
2.0000
3.0000
4.0000
5.0000
6.0000
7.0000
8.0000
9.0000
10.000
TIME (SECONDS)
SAT, JAN 31 2009 15:40
230KV BUS VOLTS

2013 WINTER PEAK WITH DSM - DELIVER RESERVE
NS-NB=200; NB-NE=500; CBX=790; ONI=1015 ONS=704
3 PHASE FAULT ON L8003 AT ONSLOW
CLEARED IN 4.5 CYCLES: SPS DROPS LINGAN 2
FILE: a07.2s-3p_8003_67n-2013WP-DSM-NS-200.out
CHNL# 217: [L6513MW]
CHNL# 215: [L6503MW]
CHNL# 197: [L8003MW]
CHNL# 195: [L8004MW]
CHNL# 193: [L8001MW]
CHNL# 221: [L3001MW]
250.00
-250.0
500.00
0.0
1000.0
-1000.
0.0
1.0000
2.0000
3.0000
4.0000
5.0000
6.0000
7.0000
8.0000
9.0000
10.000
TIME (SECONDS)
SAT, JAN 31 2009 15:40
LINE FLOW MW

2013 WINTER PEAK WITH DSM - DELIVER RESERVE
NS-NB=200; NB-NE=500; CBX=790; ONI=1015 ONS=704
3 PHASE FAULT ON L8003 AT ONSLOW
CLEARED IN 4.5 CYCLES: SPS DROPS LINGAN 2
FILE: a07.2s-3p_8003_67n-2013WP-DSM-NS-200.out
CHNL# 154: [IR141-DIGBYH69.0 VOLTS]
CHNL# 153: [IR137-STATIG25.0 VOLTS]
CHNL# 152: [IR114-GLENDH138.0 VOLTS]
CHNL# 151: [IR84-DALHOHV230.0 VOLTS]
CHNL# 150: [IR82 NUTBHV69.0 VOLTS]
CHNL# 149: [IR45 AMHERTP138.0 VOLTS]
1.2000
0.70000
0.0
1.0000
2.0000
3.0000
4.0000
5.0000
6.0000
7.0000
8.0000
9.0000
10.000
TIME (SECONDS)
SAT, JAN 31 2009 15:40
WIND BUS VOLTS

2013 WINTER PEAK WITH DSM - DELIVER RESERVE
NS-NB=200; NB-NE=500; CBX=790; ONI=1015 ONS=704
3 PHASE FAULT ON L8002 AT ONSLOW
CLEARED IN 4.5 CYCLES: NO SPS
FILE: a08-3p_8002_67n-2013WP-DSM-NS-200.out
CHNL#S 20.4: [ANGL199169 [TUFTCV3 14.400] [3]] [ANGL156661 [DARL G1 22.000] [1]
100.00 -100.0
CHNL#S 17.4: [ANGL199086 [TRENTON613.800] [6]] [ANGL156661 [DARL G1 22.000] [1]
100.00 -100.0
CHNL#S 16.4: [ANGL199085 [TRENTN5 13.800] [5]] [ANGL156661 [DARL G1 22.000] [1]
100.00 -100.0
CHNL#S 15.4: [ANGL199061 [TMP1 STO13.800] [1]] [ANGL156661 [DARL G1 22.000] [1]
100.00 -100.0
CHNL#S 13.4: [ANGL199043 [ACONIG1 20.000] [1]] [ANGL156661 [DARL G1 22.000] [1]
100.00 -100.0
CHNL#S 11.4: [ANGL199001 [LINGAN1 14.400] [1]] [ANGL156661 [DARL G1 22.000] [1]
100.00 -100.0
0.0 1.0000 2.0000 3.0000 4.0000 5.0000 6.0000 7.0000 8.0000 9.0000 10.000
TIME (SECONDS)
SAT, JAN 31 2009 15:40
NS ANGLE

2013 WINTER PEAK WITH DSM - DELIVER RESERVE
NS-NB=200; NB-NE=500; CBX=790; ONI=1015 ONS=704
3 PHASE FAULT ON L8002 AT ONSLOW
CLEARED IN 4.5 CYCLES: NO SPS
FILE: a08-3p_8002_67n-2013WP-DSM-NS-200.out
CHNL#S 10.4: [ANGL190272 [BLLDNG2 19.000] [1]] [ANGL156661 [DARL G1 22.000] [1]
100.00 -100.0
CHNL#S 6.4: [ANGL190456 [LEPRG1 26.000] [1]] [ANGL156661 [DARL G1 22.000] [1]
100.00 -100.0
CHNL#S 5.4: [ANGL190450 [MACTG1 13.800] [1]] [ANGL156661 [DARL G1 22.000] [1]
100.00 -100.0
CHNL#S 3.4: [ANGL126652 [RAV 3 22.000] [1]] [ANGL156661 [DARL G1 22.000] [1]
100.00 -100.0
CHNL#S 2.4: [ANGL101063 [MYST G7 22.000] [1]] [ANGL156661 [DARL G1 22.000] [1]
100.00 -100.0
CHNL#S 1.4: [ANGL100060 [MIS GT1 18.000] [1]] [ANGL156661 [DARL G1 22.000] [1]
100.00 -100.0
0.0 1.0000 2.0000 3.0000 4.0000 5.0000 6.0000 7.0000 8.0000 9.0000 10.000
TIME (SECONDS)
SAT, JAN 31 2009 15:40
"NE,NY,NB ANGLE"

2013 WINTER PEAK WITH DSM - DELIVER RESERVE
NS-NB=200; NB-NE=500; CBX=790; ONI=1015 ONS=704
3 PHASE FAULT ON L8002 AT ONSLOW
CLEARED IN 4.5 CYCLES: NO SPS
FILE: a08-3p_8002_67n-2013WP-DSM-NS-200.out
CHNL# 59: [POWR199169 [TUFTCV3 14.400] [3]] 2.5000 0.0
CHNL# 56: [POWR199086 [TRENTON613.800] [6]] 2.5000 0.0
CHNL# 55: [POWR199085 [TRENTN5 13.800] [5]] 2.5000 0.0
CHNL# 54: [POWR199061 [TMP1 STO13.800] [1]] 1.0000 -1.500
CHNL# 52: [POWR199043 [ACONIG1 20.000] [1]] 2.5000 0.0
CHNL# 50: [POWR199001 [LINGAN1 14.400] [1]] 2.5000 0.0
0.0 1.0000 2.0000 3.0000 4.0000 5.0000 6.0000 7.0000 8.0000 9.0000 10.000
TIME (SECONDS)
SAT, JAN 31 2009 15:40
NS MW

2013 WINTER PEAK WITH DSM - DELIVER RESERVE
NS-NB=200; NB-NE=500; CBX=790; ONI=1015 ONS=704
3 PHASE FAULT ON L8002 AT ONSLOW
CLEARED IN 4.5 CYCLES: NO SPS
FILE: a08-3p_8002_67n-2013WP-DSM-NS-200.out
CHNL# 49: [POWER190272 [BLLDNG2 19.000] [1]] 5.0000 0.0
CHNL# 45: [POWER190456 [LEPRG1 26.000] [1]] 9.0000 4.0000
CHNL# 44: [POWER190450 [MACTG1 13.800] [1]] 5.0000 0.0
CHNL# 42: [POWER126652 [RAV 3 22.000] [1]] 5.0000 0.0
CHNL# 41: [POWER101063 [MYST G7 22.000] [1]] 6.5000 1.0000
CHNL# 40: [POWER100060 [MIS GT1 18.000] [1]] 7.0000 2.0000
0.0 1.0000 2.0000 3.0000 4.0000 5.0000 6.0000 7.0000 8.0000 9.0000 10.000
TIME (SECONDS)
SAT, JAN 31 2009 15:40
"NE,NY,NB POWER"

2013 WINTER PEAK WITH DSM - DELIVER RESERVE
NS-NB=200; NB-NE=500; CBX=790; ONI=1015 ONS=704
3 PHASE FAULT ON L8002 AT ONSLOW
CLEARED IN 4.5 CYCLES: NO SPS
FILE: a08-3p_8002_67h-2013WP-DSM-NS-200.out
CHNL# 119: [VARS IR141-DIGBY]
CHNL# 118: [VARS IR137-STATIA]
CHNL# 117: [VARS IR114-GLENDHU]
CHNL# 116: [VARS IR84-DALHOUSIE]
CHNL# 115: [VARS IR82_NUTTBY]
CHNL# 114: [VARS IR45_AMHERST]
TIME (SECONDS)
SAT, JAN 31 2009 15:40
NS WIND MV

2013 WINTER PEAK WITH DSM - DELIVER RESERVE
NS-NB=200; NB-NE=500; CBX=790; ONI=1015 ONS=704
3 PHASE FAULT ON L8002 AT ONSLOW
CLEARED IN 4.5 CYCLES: NO SPS
FILE: a08-3p_8002_67h-2013WP-DSM-NS-200.out
CHNL# 79: [POWER IR141-DIGBY]
CHNL# 78: [POWER IR137-STATIA]
CHNL# 77: [POWER IR114-GLENDHU]
CHNL# 76: [POWER IR84-DALHOUSIE]
CHNL# 75: [POWER IR82_NUTTBY]
CHNL# 74: [POWER IR45_AMHERST]
TIME (SECONDS)
SAT, JAN 31 2009 15:40
NS WIND MW

2013 WINTER PEAK WITH DSM - DELIVER RESERVE
NS-NB=200; NB-NE=500; CBX=790; ONI=1015 ONS=704
3 PHASE FAULT ON L8002 AT ONSLOW
CLEARED IN 4.5 CYCLES: NO SPS
FILE: a08-3p_8002_67h-2013WP-DSM-NS-200.out
CHNL# 133: [VOLT199125 [ONSLOW 345.00]]
CHNL# 132: [VOLT199120 [HOPEWELL 345.00]]
CHNL# 131: [VOLT199045 [WOODBINE345.00]]
CHNL# 130: [VOLT190320 [SALBRY 345.00]]
CHNL# 128: [VOLT190004 [KESWICK 345.00]]
CHNL# 127: [VOLT 70002 [ORRINGTN345.00]]
TIME (SECONDS)
SAT, JAN 31 2009 15:40
"345KV VOLTAGE"

2013 WINTER PEAK WITH DSM - DELIVER RESERVE
NS-NB=200; NB-NE=500; CBX=790; ONI=1015 ONS=704
3 PHASE FAULT ON L8002 AT ONSLOW
CLEARED IN 4.5 CYCLES: NO SPS
FILE: a08-3p_8002_67h-2013WP-DSM-NS-200.out
CHNL# 125: [60*(1+[FREQ199125 [ONSLOW 345.00]])]
CHNL# 124: [60*(1+[FREQ199120 [HOPEWELL 345.00]])]
CHNL# 123: [60*(1+[FREQ199045 [WOODBINE345.00]])]
CHNL# 122: [60*(1+[FREQ190320 [SALBRY 345.00]])]
CHNL# 121: [60*(1+[FREQ190197 [C.COVE 345.00]])]
CHNL# 120: [60*(1+[FREQ 70002 [ORRINGTN345.00]])]
TIME (SECONDS)
SAT, JAN 31 2009 15:40
FREQUENCY HZ

2013 WINTER PEAK WITH DSM - DELIVER RESERVE
NS-NB=200; NB-NE=500; CBX=790; ONI=1015 ONS=704
3 PHASE FAULT ON L8002 AT ONSLOW
CLEARED IN 4.5 CYCLES: NO SPS
FILE: a08-3p_8002_67n-2013WP-DSM-NS-200.out
CHNL# 146: [VOLT199280 [TUSKET A138.00]]
CHNL# 145: [VOLT199193 [HHWAS 138.00]]
CHNL# 144: [VOLT199165 [TUFTCOVE138.00]]
CHNL# 143: [VOLT199138 [SPRNGHILL138.00]]
CHNL# 142: [VOLT199090 [50N-TREN138.00]]
CHNL# 141: [VOLT199051 [HASTINGS138.00]]
1.2000
0.70000
0.0
1.0000
2.0000
3.0000
4.0000
5.0000
6.0000
7.0000
8.0000
9.0000
10.000
TIME (SECONDS)
SAT, JAN 31 2009 15:40
138KV BUS VOLTS

2013 WINTER PEAK WITH DSM - DELIVER RESERVE
NS-NB=200; NB-NE=500; CBX=790; ONI=1015 ONS=704
3 PHASE FAULT ON L8002 AT ONSLOW
CLEARED IN 4.5 CYCLES: NO SPS
FILE: a08-3p_8002_67n-2013WP-DSM-NS-200.out
CHNL# 140: [VOLT199240 [BWATER A230.00]]
CHNL# 139: [VOLT199200 [BRUSHY 230.00]]
CHNL# 138: [VOLT199130 [ONSLOW 230.00]]
CHNL# 137: [VOLT199050 [HASTINGS230.00]]
CHNL# 136: [VOLT199044 [PT.ACONI230.00]]
CHNL# 135: [VOLT199000 [LINGAN 230.00]]
1.2000
0.70000
0.0
1.0000
2.0000
3.0000
4.0000
5.0000
6.0000
7.0000
8.0000
9.0000
10.000
TIME (SECONDS)
SAT, JAN 31 2009 15:40
230KV BUS VOLTS

2013 WINTER PEAK WITH DSM - DELIVER RESERVE
NS-NB=200; NB-NE=500; CBX=790; ONI=1015 ONS=704
3 PHASE FAULT ON L8002 AT ONSLOW
CLEARED IN 4.5 CYCLES: NO SPS
FILE: a08-3p_8002_67n-2013WP-DSM-NS-200.out
CHNL# 217: [L6533MW]
CHNL# 215: [L6503MW]
CHNL# 197: [L8003MW]
CHNL# 195: [L8004MW]
CHNL# 193: [L8001MW]
CHNL# 221: [L3001MW]
250.00
-250.0
500.00
0.0
1000.0
-1000.
0.0
1.0000
2.0000
3.0000
4.0000
5.0000
6.0000
7.0000
8.0000
9.0000
10.000
TIME (SECONDS)
SAT, JAN 31 2009 15:40
LINE FLOW MW

2013 WINTER PEAK WITH DSM - DELIVER RESERVE
NS-NB=200; NB-NE=500; CBX=790; ONI=1015 ONS=704
3 PHASE FAULT ON L8002 AT ONSLOW
CLEARED IN 4.5 CYCLES: NO SPS
FILE: a08-3p_8002_67n-2013WP-DSM-NS-200.out
CHNL# 154: [IR141-DIGBYH69.0 VOLTS]
CHNL# 153: [IR137-STATIG25.0 VOLTS]
CHNL# 152: [IR114-GLENDH138.0 VOLTS]
CHNL# 151: [IR84-DALHOHV230.0 VOLTS]
CHNL# 150: [IR82_NUTBHV69.0 VOLTS]
CHNL# 149: [IR45_AMHERTP138.0 VOLTS]
1.2000
0.70000
0.0
1.0000
2.0000
3.0000
4.0000
5.0000
6.0000
7.0000
8.0000
9.0000
10.000
TIME (SECONDS)
SAT, JAN 31 2009 15:40
WIND BUS VOLTS

2013 WINTER PEAK WITH DSM - DELIVER RESERVE
NS-NB=200; NB-NE=500; CBX=790; ONI=1015 ONS=704
3 PHASE FAULT ON L8001 AT ONSLOW
CLEARED IN 4.5 CYCLES: NO SPS
FILE: a09-3p_8001_67n-2013WP-DSM-NS-200.out
CHNL#S 20:4: [ANGL199169 [TUFTCV3 14.400] [3]] [ANGL156661 [DARL G1 22.000] [1]
100.00 -100.0
CHNL#S 17:4: [ANGL199086 [TRENTON613.800] [6]] [ANGL156661 [DARL G1 22.000] [1]
100.00 -100.0
CHNL#S 16:4: [ANGL199085 [TRENTN5 13.800] [5]] [ANGL156661 [DARL G1 22.000] [1]
100.00 -100.0
CHNL#S 15:4: [ANGL199061 [TMP1 STO13.800] [1]] [ANGL156661 [DARL G1 22.000] [1]
100.00 -100.0
CHNL#S 13:4: [ANGL199043 [ACONIG1 20.000] [1]] [ANGL156661 [DARL G1 22.000] [1]
100.00 -100.0
CHNL#S 11:4: [ANGL199001 [LINGAN1 14.400] [1]] [ANGL156661 [DARL G1 22.000] [1]
100.00 -100.0
0.0 1.0000 2.0000 3.0000 4.0000 5.0000 6.0000 7.0000 8.0000 9.0000 10.000
TIME (SECONDS)
SAT, JAN 31 2009 15:40
NS ANGLE

2013 WINTER PEAK WITH DSM - DELIVER RESERVE
NS-NB=200; NB-NE=500; CBX=790; ONI=1015 ONS=704
3 PHASE FAULT ON L8001 AT ONSLOW
CLEARED IN 4.5 CYCLES: NO SPS
FILE: a09-3p_8001_67n-2013WP-DSM-NS-200.out
CHNL#S 10:4: [ANGL190472 [BLLDNG2 19.000] [1]] [ANGL156661 [DARL G1 22.000] [1]
100.00 -100.0
CHNL#S 6:4: [ANGL190456 [LEPRG1 26.000] [1]] [ANGL156661 [DARL G1 22.000] [1]
100.00 -100.0
CHNL#S 5:4: [ANGL190450 [MACTG1 13.800] [1]] [ANGL156661 [DARL G1 22.000] [1]
100.00 -100.0
CHNL#S 3:4: [ANGL126652 [RAV 3 22.000] [1]] [ANGL156661 [DARL G1 22.000] [1]
100.00 -100.0
CHNL#S 2:4: [ANGL101063 [MYST G7 22.000] [1]] [ANGL156661 [DARL G1 22.000] [1]
100.00 -100.0
CHNL#S 1:4: [ANGL100060 [MIS GT1 18.000] [1]] [ANGL156661 [DARL G1 22.000] [1]
100.00 -100.0
0.0 1.0000 2.0000 3.0000 4.0000 5.0000 6.0000 7.0000 8.0000 9.0000 10.000
TIME (SECONDS)
SAT, JAN 31 2009 15:40
"NE,NY,NB ANGLE"

2013 WINTER PEAK WITH DSM - DELIVER RESERVE
NS-NB=200; NB-NE=500; CBX=790; ONI=1015 ONS=704
3 PHASE FAULT ON L8001 AT ONSLOW
CLEARED IN 4.5 CYCLES: NO SPS
FILE: a09-3p_8001_67n-2013WP-DSM-NS-200.out
CHNL# 59: [POWR199169 [TUFTCV3 14.400] [3]] 2.5000 0.0
CHNL# 56: [POWR199086 [TRENTON613.800] [6]] 2.5000 0.0
CHNL# 55: [POWR199085 [TRENTN5 13.800] [5]] 2.5000 0.0
CHNL# 54: [POWR199061 [TMP1 STO13.800] [1]] 1.0000 -1.500
CHNL# 52: [POWR199043 [ACONIG1 20.000] [1]] 2.5000 0.0
CHNL# 50: [POWR199001 [LINGAN1 14.400] [1]] 2.5000 0.0
0.0 1.0000 2.0000 3.0000 4.0000 5.0000 6.0000 7.0000 8.0000 9.0000 10.000
TIME (SECONDS)
SAT, JAN 31 2009 15:40
NS MW

2013 WINTER PEAK WITH DSM - DELIVER RESERVE
NS-NB=200; NB-NE=500; CBX=790; ONI=1015 ONS=704
3 PHASE FAULT ON L8001 AT ONSLOW
CLEARED IN 4.5 CYCLES: NO SPS
FILE: a09-3p_8001_67n-2013WP-DSM-NS-200.out
CHNL# 49: [POWER190472 [BLLDNG2 19.000] [1]] 5.0000 0.0
CHNL# 45: [POWER190456 [LEPRG1 26.000] [1]] 9.0000 4.0000
CHNL# 44: [POWER190450 [MACTG1 13.800] [1]] 5.0000 0.0
CHNL# 42: [POWER126652 [RAV 3 22.000] [1]] 5.0000 0.0
CHNL# 41: [POWER101063 [MYST G7 22.000] [1]] 6.5000 1.0000
CHNL# 40: [POWER100060 [MIS GT1 18.000] [1]] 7.0000 2.0000
0.0 1.0000 2.0000 3.0000 4.0000 5.0000 6.0000 7.0000 8.0000 9.0000 10.000
TIME (SECONDS)
SAT, JAN 31 2009 15:40
"NE,NY,NB POWER"

2013 WINTER PEAK WITH DSM - DELIVER RESERVE
NS-NB=200; NB-NE=500; CBX=790; ONI=1015 ONS=704
3 PHASE FAULT ON L8001 AT ONSLOW
CLEARED IN 4.5 CYCLES: NO SPS
FILE: a09-3p_8001_67h-2013WP-DSM-NS-200.out
CHNL# 119: [VARS IR141-DIGBY]
CHNL# 118: [VARS IR137-STATIA]
CHNL# 117: [VARS IR114-GLENDHU]
CHNL# 116: [VARS IR84-DALHOUSIE]
CHNL# 115: [VARS IR82_NUTTBY]
CHNL# 114: [VARS IR45_AMHERST]
0.50000
-0.5000
0.0
1.0000
2.0000
3.0000
4.0000
5.0000
6.0000
7.0000
8.0000
9.0000
10.000
TIME (SECONDS)
SAT, JAN 31 2009 15:40
NS WIND MV

2013 WINTER PEAK WITH DSM - DELIVER RESERVE
NS-NB=200; NB-NE=500; CBX=790; ONI=1015 ONS=704
3 PHASE FAULT ON L8001 AT ONSLOW
CLEARED IN 4.5 CYCLES: NO SPS
FILE: a09-3p_8001_67h-2013WP-DSM-NS-200.out
CHNL# 79: [POWER IR141-DIGBY]
CHNL# 78: [POWER IR137-STATIA]
CHNL# 77: [POWER IR114-GLENDHU]
CHNL# 76: [POWER IR84-DALHOUSIE]
CHNL# 75: [POWER IR82_NUTTBY]
CHNL# 74: [POWER IR45_AMHERST]
1.0000
0.0
0.0
1.0000
2.0000
3.0000
4.0000
5.0000
6.0000
7.0000
8.0000
9.0000
10.000
TIME (SECONDS)
SAT, JAN 31 2009 15:40
NS WIND MW

2013 WINTER PEAK WITH DSM - DELIVER RESERVE
NS-NB=200; NB-NE=500; CBX=790; ONI=1015 ONS=704
3 PHASE FAULT ON L8001 AT ONSLOW
CLEARED IN 4.5 CYCLES: NO SPS
FILE: a09-3p_8001_67h-2013WP-DSM-NS-200.out
CHNL# 133: [VOLT199125 [ONSLOW 345.00]]
CHNL# 132: [VOLT199120 [HOPEWELL 345.00]]
CHNL# 131: [VOLT199045 [WOODBINE345.00]]
CHNL# 130: [VOLT190320 [SALBRY 345.00]]
CHNL# 128: [VOLT190004 [KESWICK 345.00]]
CHNL# 127: [VOLT 70002 [ORRINGTN345.00]]
1.1000
0.90000
0.0
1.0000
2.0000
3.0000
4.0000
5.0000
6.0000
7.0000
8.0000
9.0000
10.000
TIME (SECONDS)
SAT, JAN 31 2009 15:40
"345KV VOLTAGE"

2013 WINTER PEAK WITH DSM - DELIVER RESERVE
NS-NB=200; NB-NE=500; CBX=790; ONI=1015 ONS=704
3 PHASE FAULT ON L8001 AT ONSLOW
CLEARED IN 4.5 CYCLES: NO SPS
FILE: a09-3p_8001_67h-2013WP-DSM-NS-200.out
CHNL# 125: 60*(1+[FREQ199125 [ONSLOW 345.00]])
CHNL# 124: 60*(1+[FREQ199120 [HOPEWELL 345.00]])
CHNL# 123: 60*(1+[FREQ199045 [WOODBINE345.00]])
CHNL# 122: 60*(1+[FREQ190320 [SALBRY 345.00]])
CHNL# 121: 60*(1+[FREQ190197 [C.COVE 345.00]])
CHNL# 120: 60*(1+[FREQ 70002 [ORRINGTN345.00]])
60.500
59.500
0.0
1.0000
2.0000
3.0000
4.0000
5.0000
6.0000
7.0000
8.0000
9.0000
10.000
TIME (SECONDS)
SAT, JAN 31 2009 15:40
FREQUENCY HZ

2013 WINTER PEAK WITH DSM - DELIVER RESERVE
NS-NB=200; NB-NE=500; CBX=790; ONI=1015 ONS=704
3 PHASE FAULT ON L8001 AT ONSLOW
CLEARED IN 4.5 CYCLES: NO SPS
FILE: a09-3p_8001_67h-2013WP-DSM-NS-200.out
CHNL# 145: [VOLT199193 [HHWAS_138.00]]
CHNL# 144: [VOLT199165 [TUFTCOVE138.00]]
CHNL# 143: [VOLT199138: [SPRNGHILL138.00]]
CHNL# 142: [VOLT199090 [SON-TREN138.00]]
CHNL# 141: [VOLT199051 [HASTINGS138.00]]
TIME (SECONDS)
SAT, JAN 31 2009 15:40
138KV BUS VOLTS

2013 WINTER PEAK WITH DSM - DELIVER RESERVE
NS-NB=200; NB-NE=500; CBX=790; ONI=1015 ONS=704
3 PHASE FAULT ON L8001 AT ONSLOW
CLEARED IN 4.5 CYCLES: NO SPS
FILE: a09-3p_8001_67h-2013WP-DSM-NS-200.out
CHNL# 139: [VOLT199200 [BRUSHY 230.00]]
CHNL# 138: [VOLT199130 [ONSLOW 230.00]]
CHNL# 137: [VOLT199050 [HASTINGS230.00]]
CHNL# 136: [VOLT199044 [PT.ACONI230.00]]
CHNL# 135: [VOLT199000 [LINGAN 230.00]]
TIME (SECONDS)
SAT, JAN 31 2009 15:40
230KV BUS VOLTS

2013 WINTER PEAK WITH DSM - DELIVER RESERVE
NS-NB=200; NB-NE=500; CBX=790; ONI=1015 ONS=704
3 PHASE FAULT ON L8001 AT ONSLOW
CLEARED IN 4.5 CYCLES: NO SPS
FILE: a09-3p_8001_67h-2013WP-DSM-NS-200.out
CHNL# 217: [L6533MW]
CHNL# 215: [L6503MW]
CHNL# 197: [L8003MW]
CHNL# 195: [L8004MW]
CHNL# 193: [L8001MW]
CHNL# 221: [L3001MW]
TIME (SECONDS)
SAT, JAN 31 2009 15:40
LINE FLOW MW

2013 WINTER PEAK WITH DSM - DELIVER RESERVE
NS-NB=200; NB-NE=500; CBX=790; ONI=1015 ONS=704
3 PHASE FAULT ON L8001 AT ONSLOW
CLEARED IN 4.5 CYCLES: NO SPS
FILE: a09-3p_8001_67h-2013WP-DSM-NS-200.out
CHNL# 153: [IR137-STATIG25.0 VOLTS]
CHNL# 152: [IR114-GLENDH138.0 VOLTS]
CHNL# 151: [IR84-DALHOHV230.0 VOLTS]
CHNL# 150: [IR82_NUTBHV69.0 VOLTS]
CHNL# 149: [IR45_AMHERTP138.0 VOLTS]
TIME (SECONDS)
SAT, JAN 31 2009 15:40
WIND BUS VOLTS

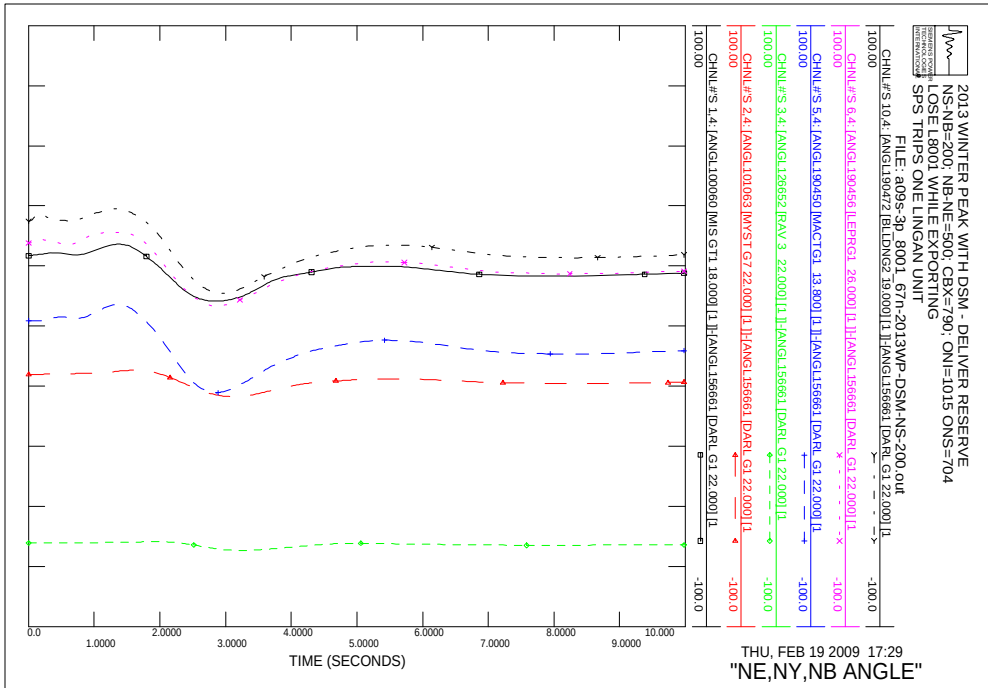
2013 WINTER PEAK WITH DSM - DELIVER RESERVE
NS-NB=200; NB-NE=500; CBX=790; ONI=1015 ONS=704
LOSE L8001 WHILE EXPORTING
SPS TRIPS ONE LINGAN UNIT
FILE: a09s-3p_8001_67n-2013WP-DSM-NS-200.out
CHNL#'S 10,4: [ANGL199472 [BLLDNG2 19.000] [1]]-[ANGL156661 [DARL G1 22.000] [1]
CHNL#'S 6,4: [ANGL190456 [LEPRG1 26.000] [1]]-[ANGL156661 [DARL G1 22.000] [1]
CHNL#'S 5,4: [ANGL190450 [MACTG1 13.800] [1]]-[ANGL156661 [DARL G1 22.000] [1]
CHNL#'S 3,4: [ANGL126652 [RAV 3 22.000] [1]]-[ANGL156661 [DARL G1 22.000] [1]
CHNL#'S 2,4: [ANGL101063 [MYST G7 22.000] [1]]-[ANGL156661 [DARL G1 22.000] [1]
CHNL#'S 1,4: [ANGL100060 [MIS GT1 18.000] [1]]-[ANGL156661 [DARL G1 22.000] [1]
100.00
-100.0
TIME (SECONDS)
THU, FEB 19 2009 17:29
"NE,NY,NB ANGLE"

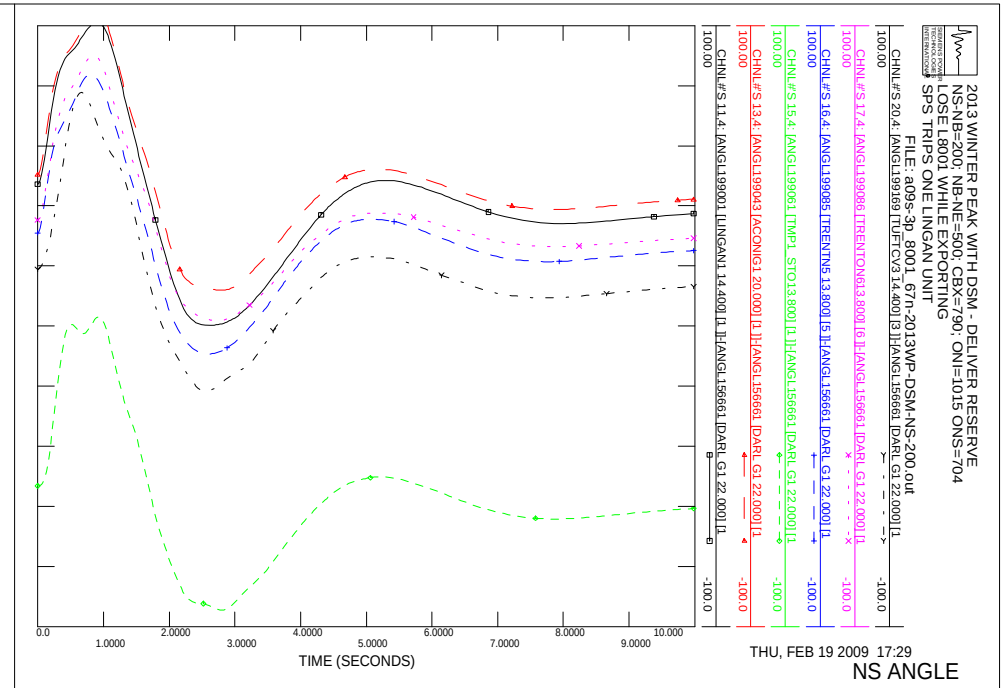
2013 WINTER PEAK WITH DSM - DELIVER RESERVE
NS-NB=200; NB-NE=500; CBX=790; ONI=1015 ONS=704
LOSE L8001 WHILE EXPORTING
SPS TRIPS ONE LINGAN UNIT
FILE: a09s-3p_8001_67n-2013WP-DSM-NS-200.out
CHNL#'S 20,4: [ANGL199169 [TUFTCV3 14.400] [3]]-[ANGL156661 [DARL G1 22.000] [1]
CHNL#'S 17,4: [ANGL199086 [TRENTON613.800] [6]]-[ANGL156661 [DARL G1 22.000] [1]
CHNL#'S 16,4: [ANGL199085 [TRENTN5 13.800] [5]]-[ANGL156661 [DARL G1 22.000] [1]
CHNL#'S 15,4: [ANGL199061 [TMP1 STO13.800] [1]]-[ANGL156661 [DARL G1 22.000] [1]
CHNL#'S 13,4: [ANGL199043 [ACONIG1 20.000] [1]]-[ANGL156661 [DARL G1 22.000] [1]
CHNL#'S 11,4: [ANGL199001 [LINGAN1 14.400] [1]]-[ANGL156661 [DARL G1 22.000] [1]
100.00
-100.0
TIME (SECONDS)
THU, FEB 19 2009 17:29
NS ANGLE

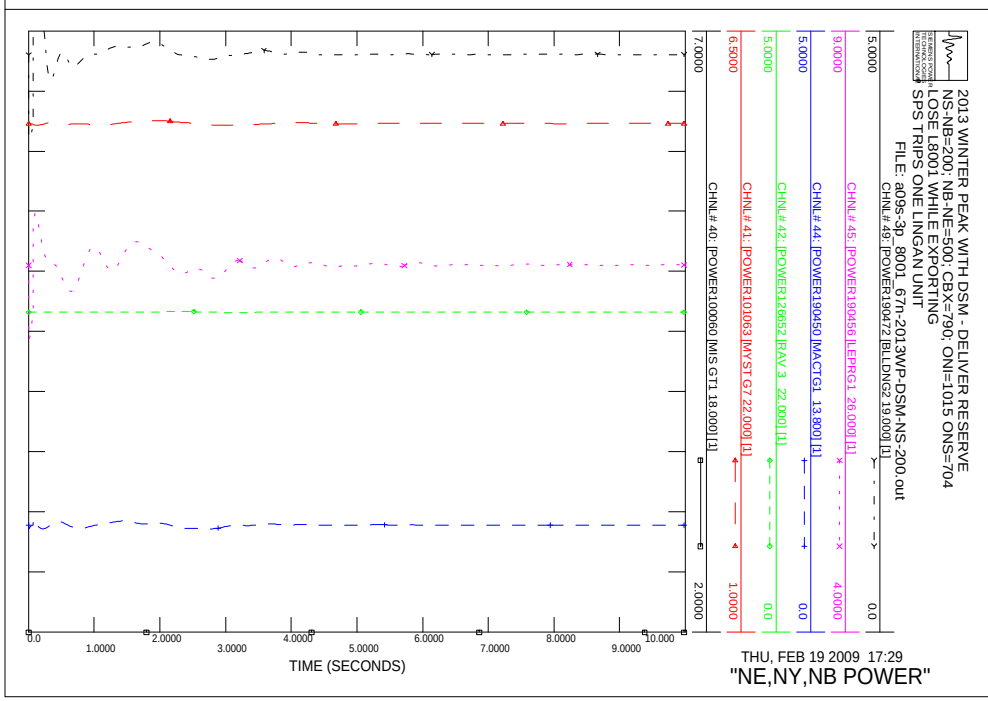
2013 WINTER PEAK WITH DSM - DELIVER RESERVE
NS-NB=200; NB-NE=500; CBX=790; ONI=1015 ONS=704
LOSE L8001 WHILE EXPORTING
SPS TRIPS ONE LINGAN UNIT
FILE: a09s-3p_8001_67n-2013WP-DSM-NS-200.out
CHNL# 49: [POWER190472 [BLLDNG2 19.000] [1]
CHNL# 45: [POWER190456 [LEPRG1 26.000] [1]
CHNL# 44: [POWER190450 [MACTG1 13.800] [1]
CHNL# 42: [POWER126652 [RAV 3 22.000] [1]
CHNL# 41: [POWER101063 [MYST G7 22.000] [1]
CHNL# 40: [POWER100060 [MIS GT1 18.000] [1]
5.0000
0.0
4.0000
1.0000
2.0000
TIME (SECONDS)
THU, FEB 19 2009 17:29
"NE,NY,NB POWER"

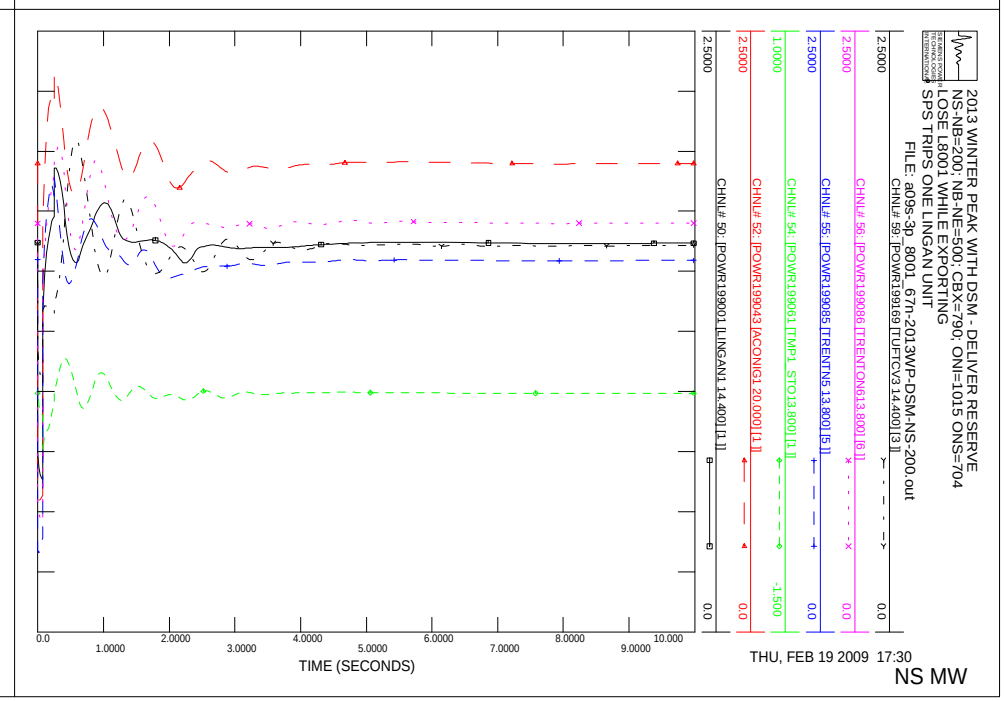
2013 WINTER PEAK WITH DSM - DELIVER RESERVE
NS-NB=200; NB-NE=500; CBX=790; ONI=1015 ONS=704
LOSE L8001 WHILE EXPORTING
SPS TRIPS ONE LINGAN UNIT
FILE: a09s-3p_8001_67n-2013WP-DSM-NS-200.out
CHNL# 59: [POWR199169 [TUFTCV3 14.400] [3]]
CHNL# 56: [POWR199086 [TRENTON613.800] [6]]
CHNL# 55: [POWR199085 [TRENTN5 13.800] [5]]
CHNL# 54: [POWR199061 [TMP1 STO13.800] [1]]
CHNL# 52: [POWR199043 [ACONIG1 20.000] [1]]
CHNL# 50: [POWR199001 [LINGAN1 14.400] [1]]
2.5000
0.0
-1.500
TIME (SECONDS)
THU, FEB 19 2009 17:30
NS MW

2013 WINTER PEAK WITH DSM - DELIVER RESERVE
NS-NB=200; NB-NE=500; CBX=790; ONI=1015 ONS=704
LOSE L8001 WHILE EXPORTING
SPS TRIPS ONE LINGAN UNIT
FILE: a09s-3p_8001_67n-2013WP-DSM-NS-200.out
CHNL# 119: [VARS IR141-DIGBY]
CHNL# 118: [VARS IR137-STATIA]
CHNL# 117: [VARS IR114-GLENDHU]
CHNL# 116: [VARS IR84-DALHOUSIE]
CHNL# 115: [VARS IR82_NUTTBY]
CHNL# 114: [VARS IR45_AMHERST]
TIME (SECONDS)
THU, FEB 19 2009 17:30
NS WIND MV

2013 WINTER PEAK WITH DSM - DELIVER RESERVE
NS-NB=200; NB-NE=500; CBX=790; ONI=1015 ONS=704
LOSE L8001 WHILE EXPORTING
SPS TRIPS ONE LINGAN UNIT
FILE: a09s-3p_8001_67n-2013WP-DSM-NS-200.out
CHNL# 79: [POWER IR141-DIGBY]
CHNL# 78: [POWER IR137-STATIA]
CHNL# 77: [POWER IR114-GLENDHU]
CHNL# 76: [POWER IR84-DALHOUSIE]
CHNL# 75: [POWER IR82_NUTTBY]
CHNL# 74: [POWER IR45_AMHERST]
TIME (SECONDS)
THU, FEB 19 2009 17:30
NS WIND MW

2013 WINTER PEAK WITH DSM - DELIVER RESERVE
NS-NB=200; NB-NE=500; CBX=790; ONI=1015 ONS=704
LOSE L8001 WHILE EXPORTING
SPS TRIPS ONE LINGAN UNIT
FILE: a09s-3p_8001_67n-2013WP-DSM-NS-200.out
CHNL# 133: [VOLT199125 [ONSLOW 345.00]]
CHNL# 132: [VOLT199120 [HOPEWELL345.00]]
CHNL# 131: [VOLT199045 [WOODBINE345.00]]
CHNL# 130: [VOLT190320 [SALBRY 345.00]]
CHNL# 128: [VOLT190004 [KESWICK 345.00]]
CHNL# 127: [VOLT 70002 [ORRINGTN345.00]]
TIME (SECONDS)
THU, FEB 19 2009 17:30
"345KV VOLTAGE"

2013 WINTER PEAK WITH DSM - DELIVER RESERVE
NS-NB=200; NB-NE=500; CBX=790; ONI=1015 ONS=704
LOSE L8001 WHILE EXPORTING
SPS TRIPS ONE LINGAN UNIT
FILE: a09s-3p_8001_67n-2013WP-DSM-NS-200.out
CHNL# 125: [60*(1+[FREQ199125 [ONSLOW 345.00]])
CHNL# 124: [60*(1+[FREQ199120 [HOPEWELL345.00]])
CHNL# 123: [60*(1+[FREQ199045 [WOODBINE345.00]])
CHNL# 122: [60*(1+[FREQ190320 [SALBRY 345.00]])
CHNL# 121: [60*(1+[FREQ190197 [C.COVE 345.00]])
CHNL# 120: [60*(1+[FREQ 70002 [ORRINGTN345.00]])
TIME (SECONDS)
THU, FEB 19 2009 17:30
FREQUENCY HZ

2013 WINTER PEAK WITH DSM - DELIVER RESERVE
NS-NB=200; NB-NE=500; CBX=790; ONI=1015 ONS=704
LOSE L8001 WHILE EXPORTING
SPS TRIPS ONE LINGAN UNIT
FILE: a09s-3p_8001_67n-2013WP-DSM-NS-200.out
CHNL# 145: [VOLT199193 [HHWAS_138.00]]
CHNL# 144: [VOLT199165 [TUFTCOVE138.00]]
CHNL# 143: [VOLT199138 [SPRNGHIL138.00]]
CHNL# 142: [VOLT199090 [SON-TREN138.00]]
CHNL# 141: [VOLT199051 [HASTINGS138.00]]
CHNL# 146: [VOLT199280 [TUSKET_A138.00]]
1.2000
0.70000
0.0
1.0000
2.0000
3.0000
4.0000
5.0000
6.0000
7.0000
8.0000
9.0000
10.000
TIME (SECONDS)
THU, FEB 19 2009 17:30
138KV BUS VOLTS

2013 WINTER PEAK WITH DSM - DELIVER RESERVE
NS-NB=200; NB-NE=500; CBX=790; ONI=1015 ONS=704
LOSE L8001 WHILE EXPORTING
SPS TRIPS ONE LINGAN UNIT
FILE: a09s-3p_8001_67n-2013WP-DSM-NS-200.out
CHNL# 139: [VOLT199200 [BRUSHY_230.00]]
CHNL# 138: [VOLT199130 [ONSLOW_230.00]]
CHNL# 137: [VOLT199050 [HASTINGS230.00]]
CHNL# 136: [VOLT199044 [PT.ACONI230.00]]
CHNL# 135: [VOLT199000 [LINGAN_230.00]]
CHNL# 140: [VOLT199240 [BWATER_A230.00]]
1.2000
0.70000
0.0
1.0000
2.0000
3.0000
4.0000
5.0000
6.0000
7.0000
8.0000
9.0000
10.000
TIME (SECONDS)
THU, FEB 19 2009 17:30
230KV BUS VOLTS

2013 WINTER PEAK WITH DSM - DELIVER RESERVE
NS-NB=200; NB-NE=500; CBX=790; ONI=1015 ONS=704
LOSE L8001 WHILE EXPORTING
SPS TRIPS ONE LINGAN UNIT
FILE: a09s-3p_8001_67n-2013WP-DSM-NS-200.out
CHNL# 197: [L8003MW1]
CHNL# 195: [L8004MW1]
CHNL# 193: [L8001MW1]
CHNL# 221: [L3001MW1]
CHNL# 215: [L6503MW1]
CHNL# 217: [L6533MW1]
250.00
-250.0
500.00
0.0
1000.0
-1000.
0.0
1.0000
2.0000
3.0000
4.0000
5.0000
6.0000
7.0000
8.0000
9.0000
10.000
TIME (SECONDS)
THU, FEB 19 2009 17:30
LINE FLOW MW

2013 WINTER PEAK WITH DSM - DELIVER RESERVE
NS-NB=200; NB-NE=500; CBX=790; ONI=1015 ONS=704
LOSE L8001 WHILE EXPORTING
SPS TRIPS ONE LINGAN UNIT
FILE: a09s-3p_8001_67n-2013WP-DSM-NS-200.out
CHNL# 152: [R114-GLENDH138.0 VOLTS]
CHNL# 151: [R84-DALHOHV230.0 VOLTS]
CHNL# 150: [R82_NUTBHV69.0 VOLTS]
CHNL# 149: [R45_AMHERTP138.0 VOLTS]
CHNL# 153: [R137-STATIG25.0 VOLTS]
CHNL# 154: [R141-DIGBYH69.0 VOLTS]
1.2000
0.70000
0.0
1.0000
2.0000
3.0000
4.0000
5.0000
6.0000
7.0000
8.0000
9.0000
10.000
TIME (SECONDS)
THU, FEB 19 2009 17:30
WIND BUS VOLTS

2013 WINTER PEAK WITH DSM - DELIVER RESERVE
NS-NB=200; NB-NE=500; CBX=790; ONI=1015 ONS=704
3 PHASE FAULT ON L6503 AT TRENTON
CLEARED IN 5 CYCLES: NO SPS
FILE: a10-3p_6503_50n-2013WP-DSM-NS-200.out
CHNL#S 20:4: [ANGL199169 [TUFTCV3 14.400] [3]] [ANGL156661 [DARL G1 22.000] [1]
CHNL#S 17:4: [ANGL199086 [TRENTON613.800] [6]] [ANGL156661 [DARL G1 22.000] [1]
CHNL#S 16:4: [ANGL199085 [TRENTN5 13.800] [5]] [ANGL156661 [DARL G1 22.000] [1]
CHNL#S 15:4: [ANGL199061 [TMP1 STO13.800] [1]] [ANGL156661 [DARL G1 22.000] [1]
CHNL#S 13:4: [ANGL199043 [ACONIG1 20.000] [1]] [ANGL156661 [DARL G1 22.000] [1]
CHNL#S 11:4: [ANGL199001 [LINGAN1 14.400] [1]] [ANGL156661 [DARL G1 22.000] [1]
100.00
-100.0
0.0
1.0000
2.0000
3.0000
4.0000
5.0000
6.0000
7.0000
8.0000
9.0000
10.000
TIME (SECONDS)
SAT, JAN 31 2009 15:40
NS ANGLE

2013 WINTER PEAK WITH DSM - DELIVER RESERVE
NS-NB=200; NB-NE=500; CBX=790; ONI=1015 ONS=704
3 PHASE FAULT ON L6503 AT TRENTON
CLEARED IN 5 CYCLES: NO SPS
FILE: a10-3p_6503_50n-2013WP-DSM-NS-200.out
CHNL#S 10:4: [ANGL190472 [BLLDNG2 19.000] [1]] [ANGL156661 [DARL G1 22.000] [1]
CHNL#S 6:4: [ANGL190456 [LEPRG1 26.000] [1]] [ANGL156661 [DARL G1 22.000] [1]
CHNL#S 5:4: [ANGL190450 [MACTG1 13.800] [1]] [ANGL156661 [DARL G1 22.000] [1]
CHNL#S 3:4: [ANGL126652 [RAV 3 22.000] [1]] [ANGL156661 [DARL G1 22.000] [1]
CHNL#S 2:4: [ANGL101063 [MYST G7 22.000] [1]] [ANGL156661 [DARL G1 22.000] [1]
CHNL#S 1:4: [ANGL100060 [MIS GT1 18.000] [1]] [ANGL156661 [DARL G1 22.000] [1]
100.00
-100.0
0.0
1.0000
2.0000
3.0000
4.0000
5.0000
6.0000
7.0000
8.0000
9.0000
10.000
TIME (SECONDS)
SAT, JAN 31 2009 15:40
"NE,NY,NB ANGLE"

2013 WINTER PEAK WITH DSM - DELIVER RESERVE
NS-NB=200; NB-NE=500; CBX=790; ONI=1015 ONS=704
3 PHASE FAULT ON L6503 AT TRENTON
CLEARED IN 5 CYCLES: NO SPS
FILE: a10-3p_6503_50n-2013WP-DSM-NS-200.out
CHNL# 59: [POWR199169 [TUFTCV3 14.400] [3]]
CHNL# 56: [POWR199086 [TRENTON613.800] [6]]
CHNL# 55: [POWR199085 [TRENTN5 13.800] [5]]
CHNL# 54: [POWR199061 [TMP1 STO13.800] [1]]
CHNL# 52: [POWR199043 [ACONIG1 20.000] [1]]
CHNL# 50: [POWR199001 [LINGAN1 14.400] [1]]
2.5000
0.0
-1.500
1.0000
0.0
TIME (SECONDS)
SAT, JAN 31 2009 15:40
NS MW

2013 WINTER PEAK WITH DSM - DELIVER RESERVE
NS-NB=200; NB-NE=500; CBX=790; ONI=1015 ONS=704
3 PHASE FAULT ON L6503 AT TRENTON
CLEARED IN 5 CYCLES: NO SPS
FILE: a10-3p_6503_50n-2013WP-DSM-NS-200.out
CHNL# 49: [POWER190472 [BLLDNG2 19.000] [1]]
CHNL# 45: [POWER190456 [LEPRG1 26.000] [1]]
CHNL# 44: [POWER190450 [MACTG1 13.800] [1]]
CHNL# 42: [POWER126652 [RAV 3 22.000] [1]]
CHNL# 41: [POWER101063 [MYST G7 22.000] [1]]
CHNL# 40: [POWER100060 [MIS GT1 18.000] [1]]
5.0000
0.0
4.0000
0.0
5.0000
0.0
6.5000
1.0000
7.0000
2.0000
TIME (SECONDS)
SAT, JAN 31 2009 15:40
"NE,NY,NB POWER"

2013 WINTER PEAK WITH DSM - DELIVER RESERVE
NS-NB=200; NB-NE=500; CBX=790; ONI=1015 ONS=704
3 PHASE FAULT ON L6503 AT TRENTON
CLEARED IN 5 CYCLES: NO SPS
FILE: a10-3p_6503_50n-2013WP-DSM-NS-200.out
CHNL# 119: [VARS IR141-DIGBY]
CHNL# 118: [VARS IR137-STATIA]
CHNL# 117: [VARS IR114-GLENDHU]
CHNL# 116: [VARS IR84-DALHOUSIE]
CHNL# 115: [VARS IR82_NUTTBY]
CHNL# 114: [VARS IR45_AMHERST]
TIME (SECONDS)
SAT, JAN 31 2009 15:40
NS WIND MV

2013 WINTER PEAK WITH DSM - DELIVER RESERVE
NS-NB=200; NB-NE=500; CBX=790; ONI=1015 ONS=704
3 PHASE FAULT ON L6503 AT TRENTON
CLEARED IN 5 CYCLES: NO SPS
FILE: a10-3p_6503_50n-2013WP-DSM-NS-200.out
CHNL# 79: [POWER IR141-DIGBY]
CHNL# 78: [POWER IR137-STATIA]
CHNL# 77: [POWER IR114-GLENDHU]
CHNL# 76: [POWER IR84-DALHOUSIE]
CHNL# 75: [POWER IR82_NUTTBY]
CHNL# 74: [POWER IR45_AMHERST]
TIME (SECONDS)
SAT, JAN 31 2009 15:40
NS WIND MW

2013 WINTER PEAK WITH DSM - DELIVER RESERVE
NS-NB=200; NB-NE=500; CBX=790; ONI=1015 ONS=704
3 PHASE FAULT ON L6503 AT TRENTON
CLEARED IN 5 CYCLES: NO SPS
FILE: a10-3p_6503_50n-2013WP-DSM-NS-200.out
CHNL# 133: [VOLT199125 [ONSLOW 345.00]]
CHNL# 132: [VOLT199120 [HOPEWELL 345.00]]
CHNL# 131: [VOLT199045 [WOODBINE345.00]]
CHNL# 130: [VOLT190320 [SALBRY 345.00]]
CHNL# 128: [VOLT190004 [KESWICK 345.00]]
CHNL# 127: [VOLT 70002 [ORRINGTN345.00]]
TIME (SECONDS)
SAT, JAN 31 2009 15:40
"345KV VOLTAGE"

2013 WINTER PEAK WITH DSM - DELIVER RESERVE
NS-NB=200; NB-NE=500; CBX=790; ONI=1015 ONS=704
3 PHASE FAULT ON L6503 AT TRENTON
CLEARED IN 5 CYCLES: NO SPS
FILE: a10-3p_6503_50n-2013WP-DSM-NS-200.out
CHNL# 125: 60*(1+[FREQ199125 [ONSLOW 345.00]])
CHNL# 124: 60*(1+[FREQ199120 [HOPEWELL 345.00]])
CHNL# 123: 60*(1+[FREQ199045 [WOODBINE345.00]])
CHNL# 122: 60*(1+[FREQ190320 [SALBRY 345.00]])
CHNL# 121: 60*(1+[FREQ190197 [C.COVE 345.00]])
CHNL# 120: 60*(1+[FREQ 70002 [ORRINGTN345.00]])
TIME (SECONDS)
SAT, JAN 31 2009 15:40
FREQUENCY HZ

2013 WINTER PEAK WITH DSM - DELIVER RESERVE
NS-NB=200; NB-NE=500; CBX=790; ONI=1015 ONS=704
3 PHASE FAULT ON L6503 AT TRENTON
CLEARED IN 5 CYCLES: NO SPS
FILE: a10-3p_6503_50n-2013WP-DSM-NS-200.out
CHNL# 146: [VOLT199280 [TUSKET A138.00]]
CHNL# 145: [VOLT199193 [HHWAS 138.00]]
CHNL# 144: [VOLT199165 [TUFTCOVE138.00]]
CHNL# 143: [VOLT199138 [SPRNGHILL138.00]]
CHNL# 142: [VOLT199090 [50N-TREN138.00]]
CHNL# 141: [VOLT199051 [HASTINGS138.00]]
1.2000
0.70000
0.0
1.0000
2.0000
3.0000
4.0000
5.0000
6.0000
7.0000
8.0000
9.0000
10.000
TIME (SECONDS)
SAT, JAN 31 2009 15:40
138KV BUS VOLTS

2013 WINTER PEAK WITH DSM - DELIVER RESERVE
NS-NB=200; NB-NE=500; CBX=790; ONI=1015 ONS=704
3 PHASE FAULT ON L6503 AT TRENTON
CLEARED IN 5 CYCLES: NO SPS
FILE: a10-3p_6503_50n-2013WP-DSM-NS-200.out
CHNL# 140: [VOLT199240 [BWATER A230.00]]
CHNL# 139: [VOLT199200 [BRUSHY 230.00]]
CHNL# 138: [VOLT199130 [ONSLOW 230.00]]
CHNL# 137: [VOLT199050 [HASTINGS230.00]]
CHNL# 136: [VOLT199044 [PT.ACONI230.00]]
CHNL# 135: [VOLT199000 [LINGAN 230.00]]
1.2000
0.70000
0.0
1.0000
2.0000
3.0000
4.0000
5.0000
6.0000
7.0000
8.0000
9.0000
10.000
TIME (SECONDS)
SAT, JAN 31 2009 15:40
230KV BUS VOLTS

2013 WINTER PEAK WITH DSM - DELIVER RESERVE
NS-NB=200; NB-NE=500; CBX=790; ONI=1015 ONS=704
3 PHASE FAULT ON L6503 AT TRENTON
CLEARED IN 5 CYCLES: NO SPS
FILE: a10-3p_6503_50n-2013WP-DSM-NS-200.out
CHNL# 217: [L6533NMW]
CHNL# 215: [L6503MW]
CHNL# 197: [L8003MW]
CHNL# 195: [L8004MW]
CHNL# 193: [L8001MW]
CHNL# 221: [L3001MW]
250.00
-250.0
500.00
0.0
1000.0
-1000.
0.0
1.0000
2.0000
3.0000
4.0000
5.0000
6.0000
7.0000
8.0000
9.0000
10.000
TIME (SECONDS)
SAT, JAN 31 2009 15:40
LINE FLOW MW

2013 WINTER PEAK WITH DSM - DELIVER RESERVE
NS-NB=200; NB-NE=500; CBX=790; ONI=1015 ONS=704
3 PHASE FAULT ON L6503 AT TRENTON
CLEARED IN 5 CYCLES: NO SPS
FILE: a10-3p_6503_50n-2013WP-DSM-NS-200.out
CHNL# 154: [IR141-DIGBYH69.0 VOLTS]
CHNL# 153: [IR137-STATIG25.0 VOLTS]
CHNL# 152: [IR114-GLENDH138.0 VOLTS]
CHNL# 151: [IR84-DALHOHV230.0 VOLTS]
CHNL# 150: [IR82_NUTBHV69.0 VOLTS]
CHNL# 149: [IR45_AMHERTP138.0 VOLTS]
1.2000
0.70000
0.0
1.0000
2.0000
3.0000
4.0000
5.0000
6.0000
7.0000
8.0000
9.0000
10.000
TIME (SECONDS)
SAT, JAN 31 2009 15:40
WIND BUS VOLTS

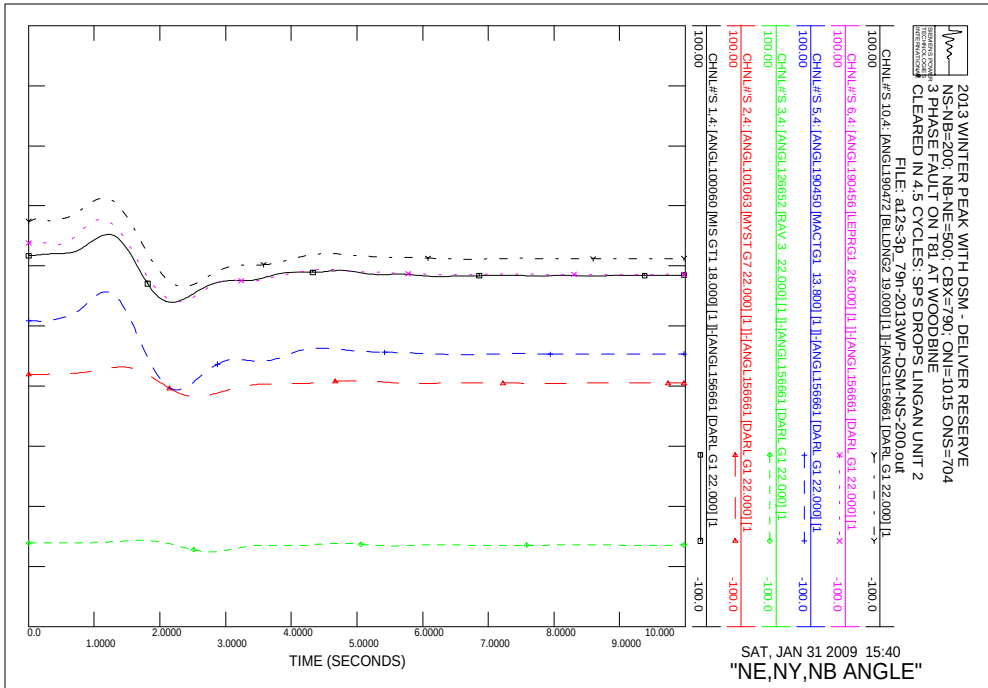
2013 WINTER PEAK WITH DSM - DELIVER RESERVE
NS-NB=200; NB-NE=500; CBX=790; ONI=1015 ONS=704
3 PHASE FAULT ON T81 AT WOODBINE
CLEARED IN 4.5 CYCLES: SPS DROPS LINGAN UNIT 2
FILE: a12s-3p_79n-2013WP-DSM-NS-200.out
CHNL#S 10,4: [ANGL190472 [BLLDNG2 19.000] [1]]-[ANGL156661 [DARL G1 22.000] [1
CHNL#S 6,4: [ANGL190456 [LEPRG1 26.000] [1]]-[ANGL156661 [DARL G1 22.000] [1
CHNL#S 5,4: [ANGL190450 [MACTG1 13.800] [1]]-[ANGL156661 [DARL G1 22.000] [1
CHNL#S 3,4: [ANGL126652 [RAV 3 22.000] [1]]-[ANGL156661 [DARL G1 22.000] [1
CHNL#S 2,4: [ANGL101063 [MYST G7 22.000] [1]]-[ANGL156661 [DARL G1 22.000] [1
CHNL#S 1,4: [ANGL100060 [MIS GT1 18.000] [1]]-[ANGL156661 [DARL G1 22.000] [1
TIME (SECONDS)
SAT, JAN 31 2009 15:40
"NE,NY,NB ANGLE"

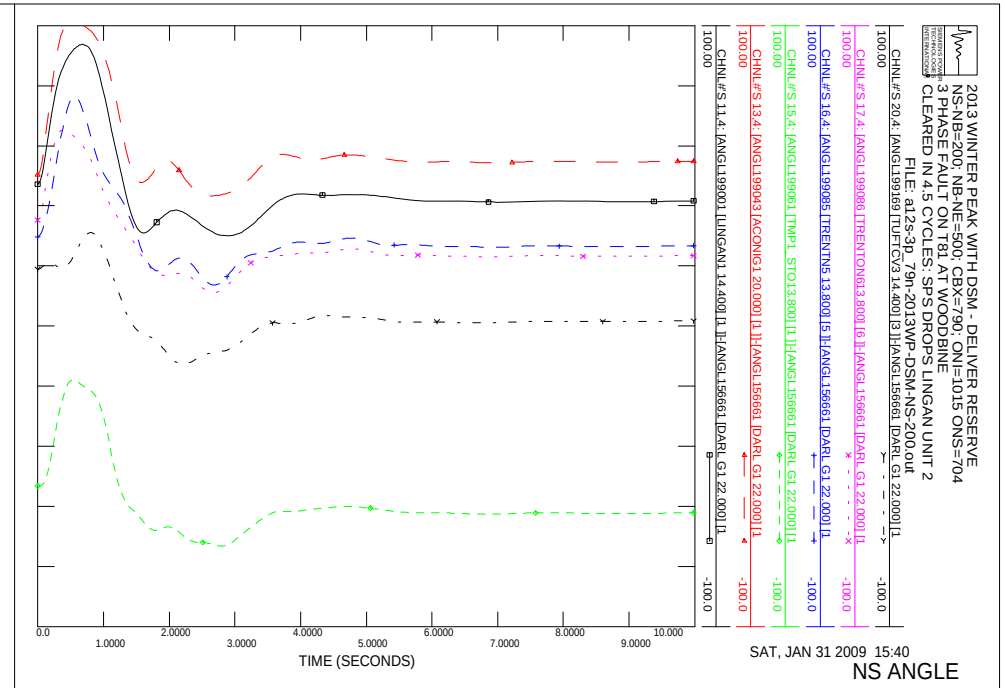
2013 WINTER PEAK WITH DSM - DELIVER RESERVE
NS-NB=200; NB-NE=500; CBX=790; ONI=1015 ONS=704
3 PHASE FAULT ON T81 AT WOODBINE
CLEARED IN 4.5 CYCLES: SPS DROPS LINGAN UNIT 2
FILE: a12s-3p_79n-2013WP-DSM-NS-200.out
CHNL#S 20,4: [ANGL199169 [TUFTCV3 14.400] [3]]-[ANGL156661 [DARL G1 22.000] [1
CHNL#S 17,4: [ANGL199086 [TRENTON613.800] [6]]-[ANGL156661 [DARL G1 22.000] [1
CHNL#S 16,4: [ANGL199085 [TRENTN5 13.800] [5]]-[ANGL156661 [DARL G1 22.000] [1
CHNL#S 15,4: [ANGL199061 [TMP1 STO13.800] [1]]-[ANGL156661 [DARL G1 22.000] [1
CHNL#S 13,4: [ANGL199043 [ACONIG1 20.000] [1]]-[ANGL156661 [DARL G1 22.000] [1
CHNL#S 11,4: [ANGL199001 [LINGAN1 14.400] [1]]-[ANGL156661 [DARL G1 22.000] [1
TIME (SECONDS)
SAT, JAN 31 2009 15:40
NS ANGLE

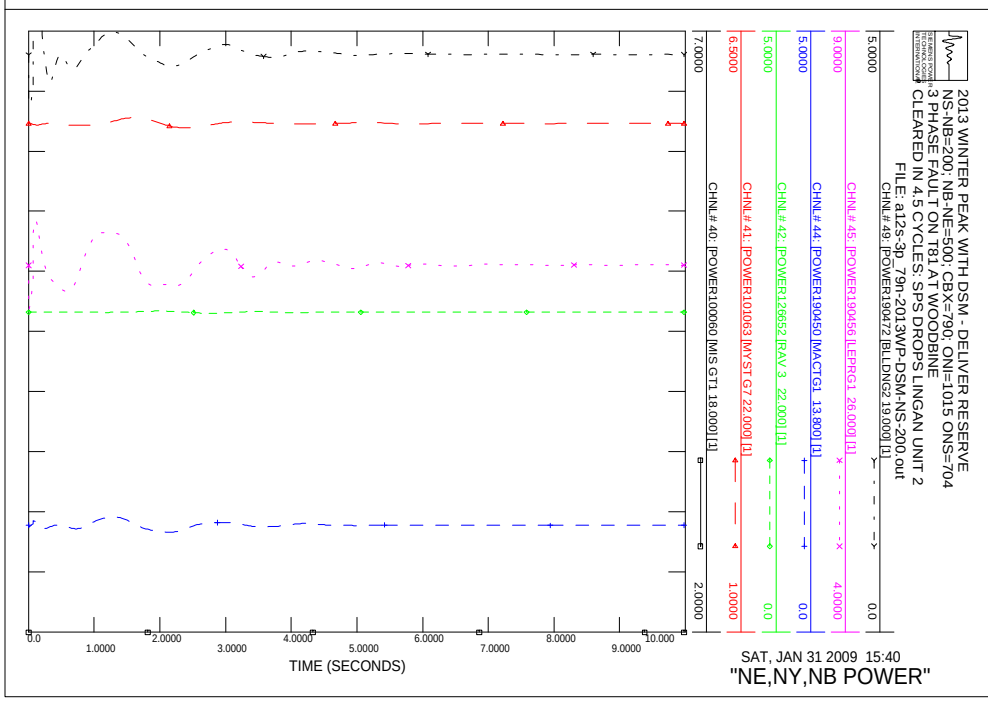
2013 WINTER PEAK WITH DSM - DELIVER RESERVE
NS-NB=200; NB-NE=500; CBX=790; ONI=1015 ONS=704
3 PHASE FAULT ON T81 AT WOODBINE
CLEARED IN 4.5 CYCLES: SPS DROPS LINGAN UNIT 2
FILE: a12s-3p_79n-2013WP-DSM-NS-200.out
CHNL# 49: [POWER190472 [BLLDNG2 19.000] [1]
CHNL# 45: [POWER190456 [LEPRG1 26.000] [1]
CHNL# 44: [POWER190450 [MACTG1 13.800] [1]
CHNL# 42: [POWER126652 [RAV 3 22.000] [1]
CHNL# 41: [POWER101063 [MYST G7 22.000] [1]
CHNL# 40: [POWER100060 [MIS GT1 18.000] [1]
TIME (SECONDS)
SAT, JAN 31 2009 15:40
"NE,NY,NB POWER"

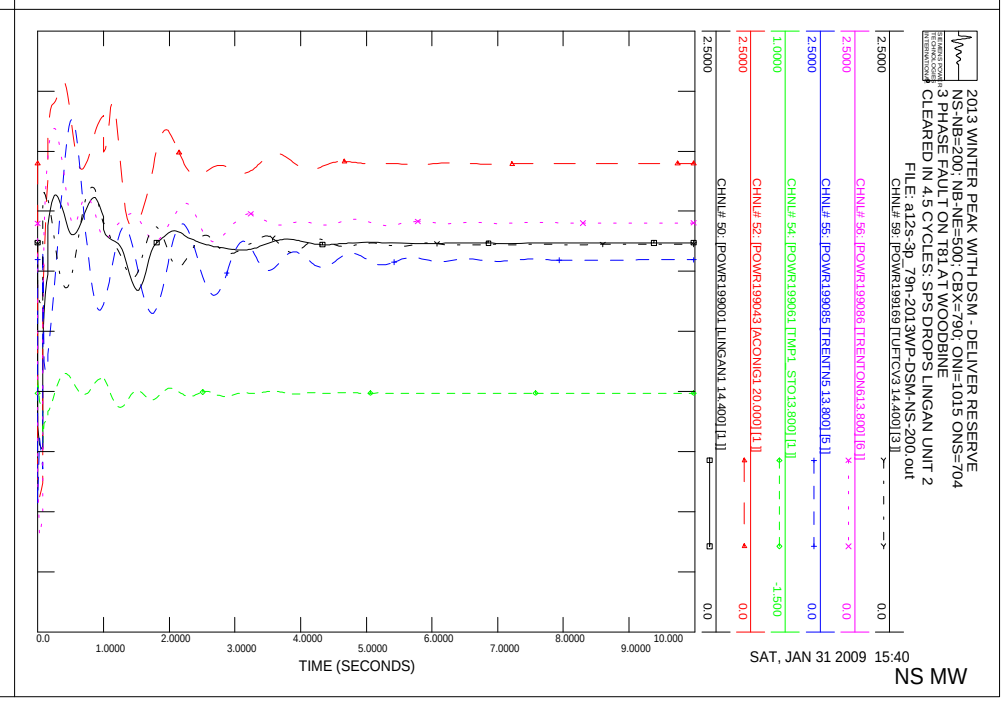
2013 WINTER PEAK WITH DSM - DELIVER RESERVE
NS-NB=200; NB-NE=500; CBX=790; ONI=1015 ONS=704
3 PHASE FAULT ON T81 AT WOODBINE
CLEARED IN 4.5 CYCLES: SPS DROPS LINGAN UNIT 2
FILE: a12s-3p_79n-2013WP-DSM-NS-200.out
CHNL# 59: [POWR199169 [TUFTCV3 14.400] [3]]
CHNL# 56: [POWR199086 [TRENTON613.800] [6]]
CHNL# 55: [POWR199085 [TRENTN5 13.800] [5]]
CHNL# 54: [POWR199061 [TMP1 STO13.800] [1]]
CHNL# 52: [POWR199043 [ACONIG1 20.000] [1]]
CHNL# 50: [POWR199001 [LINGAN1 14.400] [1]]
TIME (SECONDS)
SAT, JAN 31 2009 15:40
NS MW

2013 WINTER PEAK WITH DSM - DELIVER RESERVE
NS-NB=200; NB-NE=500; CBX=790; ONI=1015 ONS=704
3 PHASE FAULT ON T81 AT WOODBINE
CLEARED IN 4.5 CYCLES: SPS DROPS LINGAN UNIT 2
FILE: a12s-3p_79n-2013WP-DSM-NS-200.out
CHNL# 119: [VARS IR141-DIGBY]
CHNL# 118: [VARS IR137-STATIA]
CHNL# 117: [VARS IR114-GLENDHU]
CHNL# 116: [VARS IR84-DALHOUSIE]
CHNL# 115: [VARS IR82_NUTTBY]
CHNL# 114: [VARS IR45_AMHERST]
TIME (SECONDS)
SAT, JAN 31 2009 15:40
NS WIND MV

2013 WINTER PEAK WITH DSM - DELIVER RESERVE
NS-NB=200; NB-NE=500; CBX=790; ONI=1015 ONS=704
3 PHASE FAULT ON T81 AT WOODBINE
CLEARED IN 4.5 CYCLES: SPS DROPS LINGAN UNIT 2
FILE: a12s-3p_79n-2013WP-DSM-NS-200.out
CHNL# 79: [POWER IR141-DIGBY]
CHNL# 78: [POWER IR137-STATIA]
CHNL# 77: [POWER IR114-GLENDHU]
CHNL# 76: [POWER IR84-DALHOUSIE]
CHNL# 75: [POWER IR82_NUTTBY]
CHNL# 74: [POWER IR45_AMHERST]
TIME (SECONDS)
SAT, JAN 31 2009 15:40
NS WIND MW

2013 WINTER PEAK WITH DSM - DELIVER RESERVE
NS-NB=200; NB-NE=500; CBX=790; ONI=1015 ONS=704
3 PHASE FAULT ON T81 AT WOODBINE
CLEARED IN 4.5 CYCLES: SPS DROPS LINGAN UNIT 2
FILE: a12s-3p_79n-2013WP-DSM-NS-200.out
CHNL# 133: [VOLT199125 IONSLOW 345.00]
CHNL# 132: [VOLT199120 [HOPEWELL 345.00]
CHNL# 131: [VOLT199045 [WOODBINE345.00]
CHNL# 130: [VOLT190320 [SALBRY 345.00]
CHNL# 128: [VOLT190004 [KESWICK 345.00]
CHNL# 127: [VOLT 70002 [ORRINGTN345.00]
TIME (SECONDS)
SAT, JAN 31 2009 15:40
"345KV VOLTAGE"

2013 WINTER PEAK WITH DSM - DELIVER RESERVE
NS-NB=200; NB-NE=500; CBX=790; ONI=1015 ONS=704
3 PHASE FAULT ON T81 AT WOODBINE
CLEARED IN 4.5 CYCLES: SPS DROPS LINGAN UNIT 2
FILE: a12s-3p_79n-2013WP-DSM-NS-200.out
CHNL# 125: 60*(1+[FREQ199125 [ONSLOW 345.00])
CHNL# 124: 60*(1+[FREQ199120 [HOPEWELL 345.00])
CHNL# 123: 60*(1+[FREQ199045 [WOODBINE345.00])
CHNL# 122: 60*(1+[FREQ190320 [SALBRY 345.00])
CHNL# 121: 60*(1+[FREQ190197 [C.COVE 345.00])
CHNL# 120: 60*(1+[FREQ 70002 [ORRINGTN345.00])
TIME (SECONDS)
SAT, JAN 31 2009 15:40
FREQUENCY HZ

2013 WINTER PEAK WITH DSM - DELIVER RESERVE
NS-NB=200; NB-NE=500; CBX=790; ONI=1015 ONS=704
3 PHASE FAULT ON T81 AT WOODBINE
CLEARED IN 4.5 CYCLES: SPS DROPS LINGAN UNIT 2
FILE: a12s-3p_79n-2013WP-DSM-NS-200.out
CHNL# 145: [VOLT199193 [HWAS_138.00]]
CHNL# 144: [VOLT199165 [TUFTCOVE138.00]]
CHNL# 143: [VOLT199135 [SPRNGHIL138.00]]
CHNL# 142: [VOLT199090 [SON-TREN138.00]]
CHNL# 141: [VOLT199051 [HASTINGS138.00]]
CHNL# 146: [VOLT199280 [TUSKET_A138.00]]
1.2000
0.70000
0.0
1.0000
2.0000
3.0000
4.0000
5.0000
6.0000
7.0000
8.0000
9.0000
10.000
TIME (SECONDS)
SAT, JAN 31 2009 15:40
138KV BUS VOLTS

2013 WINTER PEAK WITH DSM - DELIVER RESERVE
NS-NB=200; NB-NE=500; CBX=790; ONI=1015 ONS=704
3 PHASE FAULT ON T81 AT WOODBINE
CLEARED IN 4.5 CYCLES: SPS DROPS LINGAN UNIT 2
FILE: a12s-3p_79n-2013WP-DSM-NS-200.out
CHNL# 139: [VOLT199200 [BRUSHY_230.00]]
CHNL# 138: [VOLT199130 [ONSLOW_230.00]]
CHNL# 137: [VOLT199050 [HASTINGS230.00]]
CHNL# 136: [VOLT199044 [PT.ACONI230.00]]
CHNL# 135: [VOLT199000 [LINGAN_230.00]]
CHNL# 140: [VOLT199240 [BWATER_A230.00]]
1.2000
0.70000
0.0
1.0000
2.0000
3.0000
4.0000
5.0000
6.0000
7.0000
8.0000
9.0000
10.000
TIME (SECONDS)
SAT, JAN 31 2009 15:40
230KV BUS VOLTS

2013 WINTER PEAK WITH DSM - DELIVER RESERVE
NS-NB=200; NB-NE=500; CBX=790; ONI=1015 ONS=704
3 PHASE FAULT ON T81 AT WOODBINE
CLEARED IN 4.5 CYCLES: SPS DROPS LINGAN UNIT 2
FILE: a12s-3p_79n-2013WP-DSM-NS-200.out
CHNL# 215: [L6503MW1]
CHNL# 197: [L8003MW1]
CHNL# 195: [L8004MW1]
CHNL# 193: [L8001MW1]
CHNL# 221: [L3001MW1]
CHNL# 217: [L6513MW1]
250.00
500.00
1000.0
0.0
-250.0
-1000.
TIME (SECONDS)
SAT, JAN 31 2009 15:40
LINE FLOW MW

2013 WINTER PEAK WITH DSM - DELIVER RESERVE
NS-NB=200; NB-NE=500; CBX=790; ONI=1015 ONS=704
3 PHASE FAULT ON T81 AT WOODBINE
CLEARED IN 4.5 CYCLES: SPS DROPS LINGAN UNIT 2
FILE: a12s-3p_79n-2013WP-DSM-NS-200.out
CHNL# 153: [IR137-STATIG25.0 VOLTS]
CHNL# 152: [IR114-GLENDH138.0 VOLTS]
CHNL# 151: [IR84-DALHOHV230.0 VOLTS]
CHNL# 150: [IR82_NUTBHV69.0 VOLTS]
CHNL# 149: [IR45_AMHERTP138.0 VOLTS]
CHNL# 154: [IR141-DIGBYH69.0 VOLTS]
1.2000
0.70000
0.0
1.0000
2.0000
3.0000
4.0000
5.0000
6.0000
7.0000
8.0000
9.0000
10.000
TIME (SECONDS)
SAT, JAN 31 2009 15:40
WIND BUS VOLTS

2013 WINTER PEAK WITH DSM - DELIVER RESERVE
NS-NB=200; NB-NE=500; CBX=790; ONI=1015 ONS=704
3 PHASE FAULT LAKESIDE B62, CLEARED IN
4 CYCLES, CLEARING L6008 AND L6016
FILE: a14-3ph_103h_b62-2013WP-DSM-NS-200.out
CHNL#S 20:4 [ANGL199169 [TUFTCV3 14.400] [3]] [ANGL156661 [DARL G1 22.000] [1
CHNL#S 17:4 [ANGL199086 [TRENTON613.800] [6]] [ANGL156661 [DARL G1 22.000] [1
CHNL#S 16:4 [ANGL199085 [TRENTN5 13.800] [5]] [ANGL156661 [DARL G1 22.000] [1
CHNL#S 15:4 [ANGL199061 [TMP1 STO13.800] [1]] [ANGL156661 [DARL G1 22.000] [1
CHNL#S 13:4 [ANGL199043 [ACONIG1 20.000] [1]] [ANGL156661 [DARL G1 22.000] [1
CHNL#S 11:4 [ANGL199001 [LINGAN1 14.400] [1]] [ANGL156661 [DARL G1 22.000] [1
100.00
-100.0
0.0
1.0000
2.0000
3.0000
4.0000
5.0000
6.0000
7.0000
8.0000
9.0000
10.000
TIME (SECONDS)
SAT, JAN 31 2009 15:40
NS ANGLE

2013 WINTER PEAK WITH DSM - DELIVER RESERVE
NS-NB=200; NB-NE=500; CBX=790; ONI=1015 ONS=704
3 PHASE FAULT LAKESIDE B62, CLEARED IN
4 CYCLES, CLEARING L6008 AND L6016
FILE: a14-3ph_103h_b62-2013WP-DSM-NS-200.out
CHNL#S 10:4 [ANGL190472 [BLLDNG2 19.000] [1]] [ANGL156661 [DARL G1 22.000] [1
CHNL#S 6:4 [ANGL190456 [LEPRG1 26.000] [1]] [ANGL156661 [DARL G1 22.000] [1
CHNL#S 5:4 [ANGL190450 [MACTG1 13.800] [1]] [ANGL156661 [DARL G1 22.000] [1
CHNL#S 3:4 [ANGL126652 [RAV 3 22.000] [1]] [ANGL156661 [DARL G1 22.000] [1
CHNL#S 2:4 [ANGL101063 [MYST G7 22.000] [1]] [ANGL156661 [DARL G1 22.000] [1
CHNL#S 1:4 [ANGL100060 [MIS GT1 18.000] [1]] [ANGL156661 [DARL G1 22.000] [1
100.00
-100.0
0.0
1.0000
2.0000
3.0000
4.0000
5.0000
6.0000
7.0000
8.0000
9.0000
10.000
TIME (SECONDS)
SAT, JAN 31 2009 15:40
"NE,NY,NB ANGLE"

2013 WINTER PEAK WITH DSM - DELIVER RESERVE
NS-NB=200; NB-NE=500; CBX=790; ONI=1015 ONS=704
3 PHASE FAULT LAKESIDE B62, CLEARED IN
4 CYCLES, CLEARING L6008 AND L6016
FILE: a14-3ph_103h_b62-2013WP-DSM-NS-200.out
CHNL# 59: [POWR199169 [TUFTCV3 14.400] [3]]
CHNL# 56: [POWR199086 [TRENTON613.800] [6]]
CHNL# 55: [POWR199085 [TRENTN5 13.800] [5]]
CHNL# 54: [POWR199061 [TMP1 STO13.800] [1]]
CHNL# 52: [POWR199043 [ACONIG1 20.000] [1]]
CHNL# 50: [POWR199001 [LINGAN1 14.400] [1]]
2.5000
0.0
-1.500
1.0000
2.0000
3.0000
4.0000
5.0000
6.0000
7.0000
8.0000
9.0000
10.000
TIME (SECONDS)
SAT, JAN 31 2009 15:40
NS MW

2013 WINTER PEAK WITH DSM - DELIVER RESERVE
NS-NB=200; NB-NE=500; CBX=790; ONI=1015 ONS=704
3 PHASE FAULT LAKESIDE B62, CLEARED IN
4 CYCLES, CLEARING L6008 AND L6016
FILE: a14-3ph_103h_b62-2013WP-DSM-NS-200.out
CHNL# 49: [POWER190472 [BLLDNG2 19.000] [1]]
CHNL# 45: [POWER190456 [LEPRG1 26.000] [1]]
CHNL# 44: [POWER190450 [MACTG1 13.800] [1]]
CHNL# 42: [POWER126652 [RAV 3 22.000] [1]]
CHNL# 41: [POWER101063 [MYST G7 22.000] [1]]
CHNL# 40: [POWER100060 [MIS GT1 18.000] [1]]
5.0000
0.0
4.0000
6.5000
1.0000
7.0000
2.0000
1.0000
2.0000
3.0000
4.0000
5.0000
6.0000
7.0000
8.0000
9.0000
10.000
TIME (SECONDS)
SAT, JAN 31 2009 15:40
"NE,NY,NB POWER"

2013 WINTER PEAK WITH DSM - DELIVER RESERVE
NS-NB=200; NB-NE=500; CBX=790; ONI=1015 ONS=704
3 PHASE FAULT LAKESIDE B62, CLEARED IN
4 CYCLES, CLEARING L6008 AND L6016
FILE: a14-3ph_103h_b62-2013WP-DSM-NS-200.out
CHNL# 119: [VARS IR141-DIGBY]
CHNL# 118: [VARS IR137-STATIA]
CHNL# 117: [VARS IR114-GLENDHU]
CHNL# 116: [VARS IR84-DALHOUSIE]
CHNL# 115: [VARS IR82_NUTTBY]
CHNL# 114: [VARS IR45_AMHERST]
0.50000
-0.5000
0.0
1.0000
2.0000
3.0000
4.0000
5.0000
6.0000
7.0000
8.0000
9.0000
10.000
TIME (SECONDS)
SAT, JAN 31 2009 15:40
NS WIND MV

2013 WINTER PEAK WITH DSM - DELIVER RESERVE
NS-NB=200; NB-NE=500; CBX=790; ONI=1015 ONS=704
3 PHASE FAULT LAKESIDE B62, CLEARED IN
4 CYCLES, CLEARING L6008 AND L6016
FILE: a14-3ph_103h_b62-2013WP-DSM-NS-200.out
CHNL# 79: [POWER IR141-DIGBY]
CHNL# 78: [POWER IR137-STATIA]
CHNL# 77: [POWER IR114-GLENDHU]
CHNL# 76: [POWER IR84-DALHOUSIE]
CHNL# 75: [POWER IR82_NUTTBY]
CHNL# 74: [POWER IR45_AMHERST]
1.0000
0.0
1.0000
2.0000
3.0000
4.0000
5.0000
6.0000
7.0000
8.0000
9.0000
10.000
TIME (SECONDS)
SAT, JAN 31 2009 15:40
NS WIND MW

2013 WINTER PEAK WITH DSM - DELIVER RESERVE
NS-NB=200; NB-NE=500; CBX=790; ONI=1015 ONS=704
3 PHASE FAULT LAKESIDE B62, CLEARED IN
4 CYCLES, CLEARING L6008 AND L6016
FILE: a14-3ph_103h_b62-2013WP-DSM-NS-200.out
CHNL# 133: [VOLT199125 IONSLOW 345.00]
CHNL# 132: [VOLT199120 IHOPEWELL345.00]
CHNL# 131: [VOLT199045 IWOODBINE345.00]
CHNL# 130: [VOLT190320 ISALBRY 345.00]
CHNL# 128: [VOLT190004 IKESWICK 345.00]
CHNL# 127: [VOLT 70002 IORRINGTN345.00]
1.1000
0.90000
0.0
1.0000
2.0000
3.0000
4.0000
5.0000
6.0000
7.0000
8.0000
9.0000
10.000
TIME (SECONDS)
SAT, JAN 31 2009 15:40
"345KV VOLTAGE"

2013 WINTER PEAK WITH DSM - DELIVER RESERVE
NS-NB=200; NB-NE=500; CBX=790; ONI=1015 ONS=704
3 PHASE FAULT LAKESIDE B62, CLEARED IN
4 CYCLES, CLEARING L6008 AND L6016
FILE: a14-3ph_103h_b62-2013WP-DSM-NS-200.out
CHNL# 125: [60*(1+[FREQ199125 IONSLOW 345.00])]
CHNL# 124: [60*(1+[FREQ199120 IHOPEWELL345.00])]
CHNL# 123: [60*(1+[FREQ199045 IWOODBINE345.00])]
CHNL# 122: [60*(1+[FREQ190320 ISALBRY 345.00])]
CHNL# 121: [60*(1+[FREQ190197 IC.COVE 345.00])]
CHNL# 120: [60*(1+[FREQ 70002 IORRINGTN345.00])]
60.500
59.500
0.0
1.0000
2.0000
3.0000
4.0000
5.0000
6.0000
7.0000
8.0000
9.0000
10.000
TIME (SECONDS)
SAT, JAN 31 2009 15:40
FREQUENCY HZ

2013 WINTER PEAK WITH DSM - DELIVER RESERVE
NS-NB=200; NB-NE=500; CBX=790; ONI=1015 ONS=704
3 PHASE FAULT LAKESIDE B62, CLEARED IN
4 CYCLES, CLEARING L6008 AND L6016
FILE: a14-3ph_103h_b62-2013WP-DSM-NS-200.out
CHNL# 146: [VOLT199280 [TUSKET A138.00]]
CHNL# 145: [VOLT199193 [HHWAS 138.00]]
CHNL# 144: [VOLT199165 [TUFTCOVE138.00]]
CHNL# 143: [VOLT199135 [SPRNGHILL138.00]]
CHNL# 142: [VOLT199090 [SON-TREN138.00]]
CHNL# 141: [VOLT199051 [HASTINGS138.00]]
1.2000
0.70000
0.0
1.0000
2.0000
3.0000
4.0000
5.0000
6.0000
7.0000
8.0000
9.0000
10.000
TIME (SECONDS)
SAT, JAN 31 2009 15:40
138KV BUS VOLTS

2013 WINTER PEAK WITH DSM - DELIVER RESERVE
NS-NB=200; NB-NE=500; CBX=790; ONI=1015 ONS=704
3 PHASE FAULT LAKESIDE B62, CLEARED IN
4 CYCLES, CLEARING L6008 AND L6016
FILE: a14-3ph_103h_b62-2013WP-DSM-NS-200.out
CHNL# 140: [VOLT199240 [BWATER A230.00]]
CHNL# 139: [VOLT199200 [BRUSHY 230.00]]
CHNL# 138: [VOLT199130 [ONSLOW 230.00]]
CHNL# 137: [VOLT199050 [HASTINGS230.00]]
CHNL# 136: [VOLT199044 [PT.ACONI230.00]]
CHNL# 135: [VOLT199000 [LINGAN 230.00]]
1.2000
0.70000
0.0
1.0000
2.0000
3.0000
4.0000
5.0000
6.0000
7.0000
8.0000
9.0000
10.000
TIME (SECONDS)
SAT, JAN 31 2009 15:40
230KV BUS VOLTS

2013 WINTER PEAK WITH DSM - DELIVER RESERVE
NS-NB=200; NB-NE=500; CBX=790; ONI=1015 ONS=704
3 PHASE FAULT LAKESIDE B62, CLEARED IN
4 CYCLES, CLEARING L6008 AND L6016
FILE: a14-3ph_103h_b62-2013WP-DSM-NS-200.out
CHNL# 217: [L6533MW]
CHNL# 215: [L6503MW]
CHNL# 197: [L8003MW]
CHNL# 195: [L8004MW]
CHNL# 193: [L8001MW]
CHNL# 221: [L3001MW]
250.00
500.00
1000.0
0.0
-250.0
-1000.
TIME (SECONDS)
SAT, JAN 31 2009 15:40
LINE FLOW MW

2013 WINTER PEAK WITH DSM - DELIVER RESERVE
NS-NB=200; NB-NE=500; CBX=790; ONI=1015 ONS=704
3 PHASE FAULT LAKESIDE B62, CLEARED IN
4 CYCLES, CLEARING L6008 AND L6016
FILE: a14-3ph_103h_b62-2013WP-DSM-NS-200.out
CHNL# 154: [IR141-DIGBYH69.0 VOLTS]
CHNL# 153: [IR137-STATIG25.0 VOLTS]
CHNL# 152: [IR114-GLENDH138.0 VOLTS]
CHNL# 151: [IR84-DALHOHV230.0 VOLTS]
CHNL# 150: [IR82_NUTBHV69.0 VOLTS]
CHNL# 149: [IR45_AMHERTP138.0 VOLTS]
1.2000
0.70000
0.0
1.0000
2.0000
3.0000
4.0000
5.0000
6.0000
7.0000
8.0000
9.0000
10.000
TIME (SECONDS)
SAT, JAN 31 2009 15:40
WIND BUS VOLTS

2013 WINTER PEAK WITH DSM - DELIVER RESERVE
NS-NB=200; NB-NE=500; CBX=790; ONI=1015 ONS=704
FILE: a99.1-7004w_3ph_67N-2013WP-DSM-NS-200.out
CHNL#S 20:4: [ANGL199169 [TUFTCV3 14.400] [3]] [ANGL156661 [DARL G1 22.000] [1]
CHNL#S 17:4: [ANGL199086 [TRENTON613.800] [6]] [ANGL156661 [DARL G1 22.000] [1]
CHNL#S 16:4: [ANGL199085 [TRENTN5 13.800] [5]] [ANGL156661 [DARL G1 22.000] [1]
CHNL#S 15:4: [ANGL199061 [TMP1 STO13.800] [1]] [ANGL156661 [DARL G1 22.000] [1]
CHNL#S 13:4: [ANGL199043 [ACONIG1 20.000] [1]] [ANGL156661 [DARL G1 22.000] [1]
CHNL#S 11:4: [ANGL199001 [LINGAN1 14.400] [1]] [ANGL156661 [DARL G1 22.000] [1]
100.00
-100.0
0.0
1.0000
2.0000
3.0000
4.0000
5.0000
6.0000
7.0000
8.0000
9.0000
10.000
TIME (SECONDS)
TUE, FEB 17 2009 10:53
NS ANGLE

2013 WINTER PEAK WITH DSM - DELIVER RESERVE
NS-NB=200; NB-NE=500; CBX=790; ONI=1015 ONS=704
FILE: a99.1-7004w_3ph_67N-2013WP-DSM-NS-200.out
CHNL#S 10:4: [ANGL190472 [BLLDNG2 19.000] [1]] [ANGL156661 [DARL G1 22.000] [1]
CHNL#S 6:4: [ANGL190456 [LEPRG1 26.000] [1]] [ANGL156661 [DARL G1 22.000] [1]
CHNL#S 5:4: [ANGL190450 [MACTG1 13.800] [1]] [ANGL156661 [DARL G1 22.000] [1]
CHNL#S 3:4: [ANGL126652 [RAV 3 22.000] [1]] [ANGL156661 [DARL G1 22.000] [1]
CHNL#S 2:4: [ANGL101063 [MYST G7 22.000] [1]] [ANGL156661 [DARL G1 22.000] [1]
CHNL#S 1:4: [ANGL100060 [MIS GT1 18.000] [1]] [ANGL156661 [DARL G1 22.000] [1]
100.00
-100.0
0.0
1.0000
2.0000
3.0000
4.0000
5.0000
6.0000
7.0000
8.0000
9.0000
10.000
TIME (SECONDS)
TUE, FEB 17 2009 10:53
"NE,NY,NB ANGLE"

2013 WINTER PEAK WITH DSM - DELIVER RESERVE
NS-NB=200; NB-NE=500; CBX=790; ONI=1015 ONS=704
FILE: a99.1-7004w_3ph_67N-2013WP-DSM-NS-200.out
CHNL# 59: [POWER199169 [TUFTCV3 14.400] [3]]
CHNL# 56: [POWER199086 [TRENTON613.800] [6]]
CHNL# 55: [POWER199085 [TRENTN5 13.800] [5]]
CHNL# 54: [POWER199061 [TMP1 STO13.800] [1]]
CHNL# 52: [POWER199043 [ACONIG1 20.000] [1]]
CHNL# 50: [POWER199001 [LINGAN1 14.400] [1]]
2.5000
0.0
-1.500
1.0000
0.0
10.000
TIME (SECONDS)
TUE, FEB 17 2009 10:53
NS MW

2013 WINTER PEAK WITH DSM - DELIVER RESERVE
NS-NB=200; NB-NE=500; CBX=790; ONI=1015 ONS=704
FILE: a99.1-7004w_3ph_67N-2013WP-DSM-NS-200.out
CHNL# 49: [POWER190472 [BLLDNG2 19.000] [1]]
CHNL# 45: [POWER190456 [LEPRG1 26.000] [1]]
CHNL# 44: [POWER190450 [MACTG1 13.800] [1]]
CHNL# 42: [POWER126652 [RAV 3 22.000] [1]]
CHNL# 41: [POWER101063 [MYST G7 22.000] [1]]
CHNL# 40: [POWER100060 [MIS GT1 18.000] [1]]
5.0000
0.0
4.0000
1.0000
2.0000
10.000
TIME (SECONDS)
TUE, FEB 17 2009 10:53
"NE,NY,NB POWER"

2013 WINTER PEAK WITH DSM - DELIVER RESERVE
NS-NB=200; NB-NE=500; CBX=790; ONI=1015 ONS=704
FILE: a99.1-7004w_3ph_67N-2013WP-DSM-NS-200.out
CHNL# 119: [VARS IR141-DIGBY]
CHNL# 118: [VARS IR137-STATIA]
CHNL# 117: [VARS IR114-GLENDHU]
CHNL# 116: [VARS IR84-DALHOUSIE]
CHNL# 115: [VARS IR82_NUTTBY]
CHNL# 114: [VARS IR45_AMHERST]
TIME (SECONDS)
TUE, FEB 17 2009 10:53
NS WIND MV

2013 WINTER PEAK WITH DSM - DELIVER RESERVE
NS-NB=200; NB-NE=500; CBX=790; ONI=1015 ONS=704
FILE: a99.1-7004w_3ph_67N-2013WP-DSM-NS-200.out
CHNL# 79: [POWER IR141-DIGBY]
CHNL# 78: [POWER IR137-STATIA]
CHNL# 77: [POWER IR114-GLENDHU]
CHNL# 76: [POWER IR84-DALHOUSIE]
CHNL# 75: [POWER IR82_NUTTBY]
CHNL# 74: [POWER IR45_AMHERST]
TIME (SECONDS)
TUE, FEB 17 2009 10:53
NS WIND MW

2013 WINTER PEAK WITH DSM - DELIVER RESERVE
NS-NB=200; NB-NE=500; CBX=790; ONI=1015 ONS=704
FILE: a99.1-7004w_3ph_67N-2013WP-DSM-NS-200.out
CHNL# 133: [VOLT199125 IONSLOW 345.00]
CHNL# 132: [VOLT199120 IHOPEWELL345.00]
CHNL# 131: [VOLT199045 IWOODBINE345.00]
CHNL# 130: [VOLT190320 ISALBRY 345.00]
CHNL# 128: [VOLT190004 IKESWICK 345.00]
CHNL# 127: [VOLT 70002 IORRINGTN345.00]
TIME (SECONDS)
TUE, FEB 17 2009 10:53
"345KV VOLTAGE"

2013 WINTER PEAK WITH DSM - DELIVER RESERVE
NS-NB=200; NB-NE=500; CBX=790; ONI=1015 ONS=704
FILE: a99.1-7004w_3ph_67N-2013WP-DSM-NS-200.out
CHNL# 125: 60*(1+[FREQ199125 IONSLOW 345.00])
CHNL# 124: 60*(1+[FREQ199120 IHOPEWELL345.00])
CHNL# 123: 60*(1+[FREQ199045 IWOODBINE345.00])
CHNL# 122: 60*(1+[FREQ190320 ISALBRY 345.00])
CHNL# 121: 60*(1+[FREQ190197 IC.COVE 345.00])
CHNL# 120: 60*(1+[FREQ 70002 IORRINGTN345.00])
TIME (SECONDS)
TUE, FEB 17 2009 10:53
FREQUENCY HZ

2013 WINTER PEAK WITH DSM - DELIVER RESERVE
NS-NB=200; NB-NE=500; CBX=790; ONI=1015 ONS=704
FILE: a99.1-7004w_3ph_67N-2013WP-DSM-NS-200.out
CHNL# 146: [VOLT199280 [TUSKET A138.00]] 1.2000 0.70000
CHNL# 145: [VOLT199193 [HHWAS 138.00]] 1.2000 0.70000
CHNL# 144: [VOLT199165 [TUFTCOVE138.00]] 1.2000 0.70000
CHNL# 143: [VOLT199138 [SPRNGHILL138.00]] 1.2000 0.70000
CHNL# 142: [VOLT199090 [SON-TREN138.00]] 1.2000 0.70000
CHNL# 141: [VOLT199051 [HASTINGS138.00]] 1.2000 0.70000
0.0 1.0000 2.0000 3.0000 4.0000 5.0000 6.0000 7.0000 8.0000 9.0000 10.000
TIME (SECONDS)
TUE, FEB 17 2009 10:53
138KV BUS VOLTS

2013 WINTER PEAK WITH DSM - DELIVER RESERVE
NS-NB=200; NB-NE=500; CBX=790; ONI=1015 ONS=704
FILE: a99.1-7004w_3ph_67N-2013WP-DSM-NS-200.out
CHNL# 140: [VOLT199240 [BWATER A230.00]] 1.2000 0.70000
CHNL# 139: [VOLT199200 [BRUSHY 230.00]] 1.2000 0.70000
CHNL# 138: [VOLT199130 [ONSLOW 230.00]] 1.2000 0.70000
CHNL# 137: [VOLT199050 [HASTINGS230.00]] 1.2000 0.70000
CHNL# 136: [VOLT199044 [PT.ACONI230.00]] 1.2000 0.70000
CHNL# 135: [VOLT199000 [LINGAN 230.00]] 1.2000 0.70000
0.0 1.0000 2.0000 3.0000 4.0000 5.0000 6.0000 7.0000 8.0000 9.0000 10.000
TIME (SECONDS)
TUE, FEB 17 2009 10:53
230KV BUS VOLTS

2013 WINTER PEAK WITH DSM - DELIVER RESERVE
NS-NB=200; NB-NE=500; CBX=790; ONI=1015 ONS=704
FILE: a99.1-7004w_3ph_67N-2013WP-DSM-NS-200.out
CHNL# 217: [L6513MW] 250.00 -250.0
CHNL# 215: [L6503MW] 500.00 0.0
CHNL# 197: [L8003MW] 1000.0 0.0
CHNL# 195: [L8004MW] 1000.0 0.0
CHNL# 193: [L8001MW] 1000.0 -1000.
CHNL# 221: [L3001MW] 1000.0 -1000.
0.0 1.0000 2.0000 3.0000 4.0000 5.0000 6.0000 7.0000 8.0000 9.0000 10.000
TIME (SECONDS)
TUE, FEB 17 2009 10:53
LINE FLOW MW

2013 WINTER PEAK WITH DSM - DELIVER RESERVE
NS-NB=200; NB-NE=500; CBX=790; ONI=1015 ONS=704
FILE: a99.1-7004w_3ph_67N-2013WP-DSM-NS-200.out
CHNL# 154: [IR141-DIGBYH69.0 VOLTS] 1.2000 0.70000
CHNL# 153: [IR137-STATIG25.0 VOLTS] 1.2000 0.70000
CHNL# 152: [IR114-GLENDH138.0 VOLTS] 1.2000 0.70000
CHNL# 151: [IR84-DALHOHV230.0 VOLTS] 1.2000 0.70000
CHNL# 150: [IR82_NUTBHV69.0 VOLTS] 1.2000 0.70000
CHNL# 149: [IR45_AMHERTP138.0 VOLTS] 1.2000 0.70000
0.0 1.0000 2.0000 3.0000 4.0000 5.0000 6.0000 7.0000 8.0000 9.0000 10.000
TIME (SECONDS)
TUE, FEB 17 2009 10:53
WIND BUS VOLTS

2013 WINTER PEAK WITH DSM - DELIVER RESERVE
NS-NB=200; NB-NE=500; CBX=790; ONI=1015 ONS=704
FILE: a99.2-7004w_3ph_ir84-2013WP-DSM-NS-200.out
CHNL#S 20.4: [ANGL199169 [TUFTCV3 14.400] [3]] [ANGL156661 [DARL G1 22.000] [1
CHNL#S 17.4: [ANGL199086 [TRENTON613.800] [6]] [ANGL156661 [DARL G1 22.000] [1
CHNL#S 16.4: [ANGL199085 [TRENTN5 13.800] [5]] [ANGL156661 [DARL G1 22.000] [1
CHNL#S 15.4: [ANGL199061 [TMP1 STO13.800] [1]] [ANGL156661 [DARL G1 22.000] [1
CHNL#S 13.4: [ANGL199043 [ACONIG1 20.000] [1]] [ANGL156661 [DARL G1 22.000] [1
CHNL#S 11.4: [ANGL199001 [LINGAN1 14.400] [1]] [ANGL156661 [DARL G1 22.000] [1
TIME (SECONDS)
TUE, FEB 17 2009 10:53
NS ANGLE

2013 WINTER PEAK WITH DSM - DELIVER RESERVE
NS-NB=200; NB-NE=500; CBX=790; ONI=1015 ONS=704
FILE: a99.2-7004w_3ph_ir84-2013WP-DSM-NS-200.out
CHNL#S 10.4: [ANGL190472 [BLLDNG2 19.000] [1]] [ANGL156661 [DARL G1 22.000] [1
CHNL#S 6.4: [ANGL190456 [LEPRG1 26.000] [1]] [ANGL156661 [DARL G1 22.000] [1
CHNL#S 5.4: [ANGL190450 [MACTG1 13.800] [1]] [ANGL156661 [DARL G1 22.000] [1
CHNL#S 3.4: [ANGL126652 [RAV 3 22.000] [1]] [ANGL156661 [DARL G1 22.000] [1
CHNL#S 2.4: [ANGL101063 [MYST G7 22.000] [1]] [ANGL156661 [DARL G1 22.000] [1
CHNL#S 1.4: [ANGL100060 [MIS GT1 18.000] [1]] [ANGL156661 [DARL G1 22.000] [1
TIME (SECONDS)
TUE, FEB 17 2009 10:53
"NE,NY,NB ANGLE"

2013 WINTER PEAK WITH DSM - DELIVER RESERVE
NS-NB=200; NB-NE=500; CBX=790; ONI=1015 ONS=704
FILE: a99.2-7004w_3ph_ir84-2013WP-DSM-NS-200.out
CHNL# 59: [POWER199169 [TUFTCV3 14.400] [3]]
CHNL# 56: [POWER199086 [TRENTON613.800] [6]]
CHNL# 55: [POWER199085 [TRENTN5 13.800] [5]]
CHNL# 54: [POWER199061 [TMP1 STO13.800] [1]]
CHNL# 52: [POWER199043 [ACONIG1 20.000] [1]]
CHNL# 50: [POWER199001 [LINGAN1 14.400] [1]]
TIME (SECONDS)
TUE, FEB 17 2009 10:53
NS MW

2013 WINTER PEAK WITH DSM - DELIVER RESERVE
NS-NB=200; NB-NE=500; CBX=790; ONI=1015 ONS=704
FILE: a99.2-7004w_3ph_ir84-2013WP-DSM-NS-200.out
CHNL# 49: [POWER190472 [BLLDNG2 19.000] [1]]
CHNL# 45: [POWER190456 [LEPRG1 26.000] [1]]
CHNL# 44: [POWER190450 [MACTG1 13.800] [1]]
CHNL# 42: [POWER126652 [RAV 3 22.000] [1]]
CHNL# 41: [POWER101063 [MYST G7 22.000] [1]]
CHNL# 40: [POWER100060 [MIS GT1 18.000] [1]]
TIME (SECONDS)
TUE, FEB 17 2009 10:53
"NE,NY,NB POWER"

2013 WINTER PEAK WITH DSM - DELIVER RESERVE
NS-NB=200; NB-NE=500; CBX=790; ONI=1015 ONS=704
FILE: a99.2-7004w_3ph_ir84-2013WP-DSM-NS-200.out
CHNL# 119: [VARS IR141-DIGBY]
CHNL# 118: [VARS IR137-STATIA]
CHNL# 117: [VARS IR114-GLENDHU]
CHNL# 116: [VARS IR84-DALHOUSIE]
CHNL# 115: [VARS IR82_NUTTBY]
CHNL# 114: [VARS IR45_AMHERST]
TIME (SECONDS)
TUE, FEB 17 2009 10:53
NS WIND MV

2013 WINTER PEAK WITH DSM - DELIVER RESERVE
NS-NB=200; NB-NE=500; CBX=790; ONI=1015 ONS=704
FILE: a99.2-7004w_3ph_ir84-2013WP-DSM-NS-200.out
CHNL# 79: [POWER IR141-DIGBY]
CHNL# 78: [POWER IR137-STATIA]
CHNL# 77: [POWER IR114-GLENDHU]
CHNL# 76: [POWER IR84-DALHOUSIE]
CHNL# 75: [POWER IR82_NUTTBY]
CHNL# 74: [POWER IR45_AMHERST]
TIME (SECONDS)
TUE, FEB 17 2009 10:53
NS WIND MW

2013 WINTER PEAK WITH DSM - DELIVER RESERVE
NS-NB=200; NB-NE=500; CBX=790; ONI=1015 ONS=704
FILE: a99.2-7004w_3ph_ir84-2013WP-DSM-NS-200.out
CHNL# 133: [VOLT199125 [ONSLOW 345.00]]
CHNL# 132: [VOLT199120 [HOPEWELL345.00]]
CHNL# 131: [VOLT199045 [WOODBINE345.00]]
CHNL# 130: [VOLT190320 [SALBRY 345.00]]
CHNL# 128: [VOLT190004 [KESWICK 345.00]]
CHNL# 127: [VOLT 70002 [ORRINGTN345.00]]
TIME (SECONDS)
TUE, FEB 17 2009 10:53
"345KV VOLTAGE"

2013 WINTER PEAK WITH DSM - DELIVER RESERVE
NS-NB=200; NB-NE=500; CBX=790; ONI=1015 ONS=704
FILE: a99.2-7004w_3ph_ir84-2013WP-DSM-NS-200.out
CHNL# 125: 60*(1+[FREQ199125 [ONSLOW 345.00]])
CHNL# 124: 60*(1+[FREQ199120 [HOPEWELL345.00]])
CHNL# 123: 60*(1+[FREQ199045 [WOODBINE345.00]])
CHNL# 122: 60*(1+[FREQ190320 [SALBRY 345.00]])
CHNL# 121: 60*(1+[FREQ190197 [C.COVE 345.00]])
CHNL# 120: 60*(1+[FREQ 70002 [ORRINGTN345.00]])
TIME (SECONDS)
TUE, FEB 17 2009 10:53
FREQUENCY HZ

2013 WINTER PEAK WITH DSM - DELIVER RESERVE
NS-NB=200; NB-NE=500; CBX=790; ONI=1015 ONS=704
FILE: a99.2-7004w_3ph_ir84-2013WP-DSM-NS-200.out
CHNL# 146: [VOLT199280 [TUSKET A138.00]] 1.2000 0.70000
CHNL# 145: [VOLT199193 [HHWAS 138.00]] 1.2000 0.70000
CHNL# 144: [VOLT199165 [TUFTCOVE138.00]] 1.2000 0.70000
CHNL# 143: [VOLT199138 [SPRNGHIL138.00]] 1.2000 0.70000
CHNL# 142: [VOLT199090 [SON-TREN138.00]] 1.2000 0.70000
CHNL# 141: [VOLT199051 [HASTINGS138.00]] 1.2000 0.70000
0.0 1.0000 2.0000 3.0000 4.0000 5.0000 6.0000 7.0000 8.0000 9.0000 10.000
TIME (SECONDS)
TUE, FEB 17 2009 10:53
138KV BUS VOLTS

2013 WINTER PEAK WITH DSM - DELIVER RESERVE
NS-NB=200; NB-NE=500; CBX=790; ONI=1015 ONS=704
FILE: a99.2-7004w_3ph_ir84-2013WP-DSM-NS-200.out
CHNL# 140: [VOLT199240 [BWATER A230.00]] 1.2000 0.70000
CHNL# 139: [VOLT199200 [BRUSHY 230.00]] 1.2000 0.70000
CHNL# 138: [VOLT199130 [ONSLOW 230.00]] 1.2000 0.70000
CHNL# 137: [VOLT199050 [HASTINGS230.00]] 1.2000 0.70000
CHNL# 136: [VOLT199044 [PT.ACONI230.00]] 1.2000 0.70000
CHNL# 135: [VOLT199000 [LINGAN 230.00]] 1.2000 0.70000
0.0 1.0000 2.0000 3.0000 4.0000 5.0000 6.0000 7.0000 8.0000 9.0000 10.000
TIME (SECONDS)
TUE, FEB 17 2009 10:53
230KV BUS VOLTS

2013 WINTER PEAK WITH DSM - DELIVER RESERVE
NS-NB=200; NB-NE=500; CBX=790; ONI=1015 ONS=704
FILE: a99.2-7004w_3ph_ir84-2013WP-DSM-NS-200.out
CHNL# 217: [L6533NWW] 250.00 -250.0
CHNL# 215: [L6503MVI] 500.00 0.0
CHNL# 197: [L8003MVI] 1000.0 0.0
CHNL# 195: [L8004MVI] 1000.0 0.0
CHNL# 193: [L8001MVI] 1000.0 -1000.
CHNL# 221: [L3001MVI] 1000.0 -1000.
0.0 1.0000 2.0000 3.0000 4.0000 5.0000 6.0000 7.0000 8.0000 9.0000 10.000
TIME (SECONDS)
TUE, FEB 17 2009 10:53
LINE FLOW MW

2013 WINTER PEAK WITH DSM - DELIVER RESERVE
NS-NB=200; NB-NE=500; CBX=790; ONI=1015 ONS=704
FILE: a99.2-7004w_3ph_ir84-2013WP-DSM-NS-200.out
CHNL# 154: [IR141-DIGBYH69.0 VOLTS] 1.2000 0.70000
CHNL# 153: [IR137-STATIG25.0 VOLTS] 1.2000 0.70000
CHNL# 152: [IR114-GLENDH138.0 VOLTS] 1.2000 0.70000
CHNL# 151: [IR84-DALHOHV230.0 VOLTS] 1.2000 0.70000
CHNL# 150: [IR82_NUTBHV69.0 VOLTS] 1.2000 0.70000
CHNL# 149: [IR45_AMHERTP138.0 VOLTS] 1.2000 0.70000
0.0 1.0000 2.0000 3.0000 4.0000 5.0000 6.0000 7.0000 8.0000 9.0000 10.000
TIME (SECONDS)
TUE, FEB 17 2009 10:53
WIND BUS VOLTS

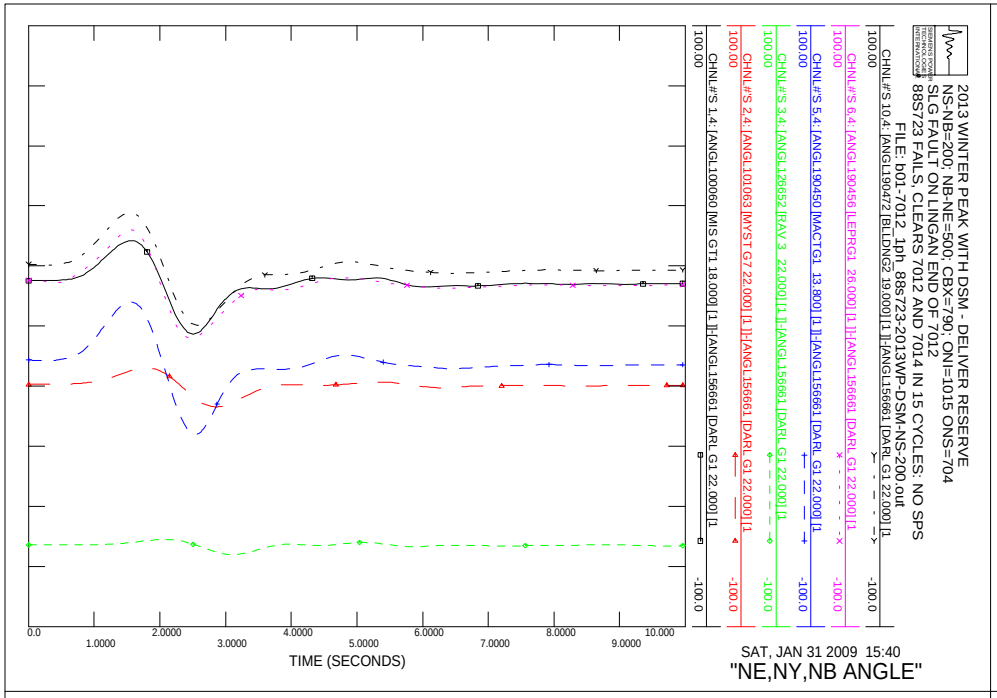
2013 WINTER PEAK WITH DSM - DELIVER RESERVE
NS-NB=200; NB-NE=500; CBX=790; ONI=1015 ONS=704
SLG FAULT ON LINGAN END OF 7012
88S723 FAILS, CLEARS 7012 AND 7014 IN 15 CYCLES: NO SPS
FILE: b01-7012_1ph_88s723-2013WP-DSM-NS-200.out
CHNL#'S 10,4: [ANGL190472 [BLLDNG2 19.000] [1]]-[ANGL156661 [DARL G1 22.000] [1
CHNL#'S 6,4: [ANGL190456 [LEPRG1 26.000] [1]]-[ANGL156661 [DARL G1 22.000] [1
CHNL#'S 5,4: [ANGL190450 [MACTG1 13.800] [1]]-[ANGL156661 [DARL G1 22.000] [1
CHNL#'S 3,4: [ANGL126652 [RAV 3 22.000] [1]]-[ANGL156661 [DARL G1 22.000] [1
CHNL#'S 2,4: [ANGL101063 [MYST G7 22.000] [1]]-[ANGL156661 [DARL G1 22.000] [1
CHNL#'S 1,4: [ANGL100060 [MIS GT1 18.000] [1]]-[ANGL156661 [DARL G1 22.000] [1
TIME (SECONDS)
SAT, JAN 31 2009 15:40
"NE,NY,NB ANGLE"

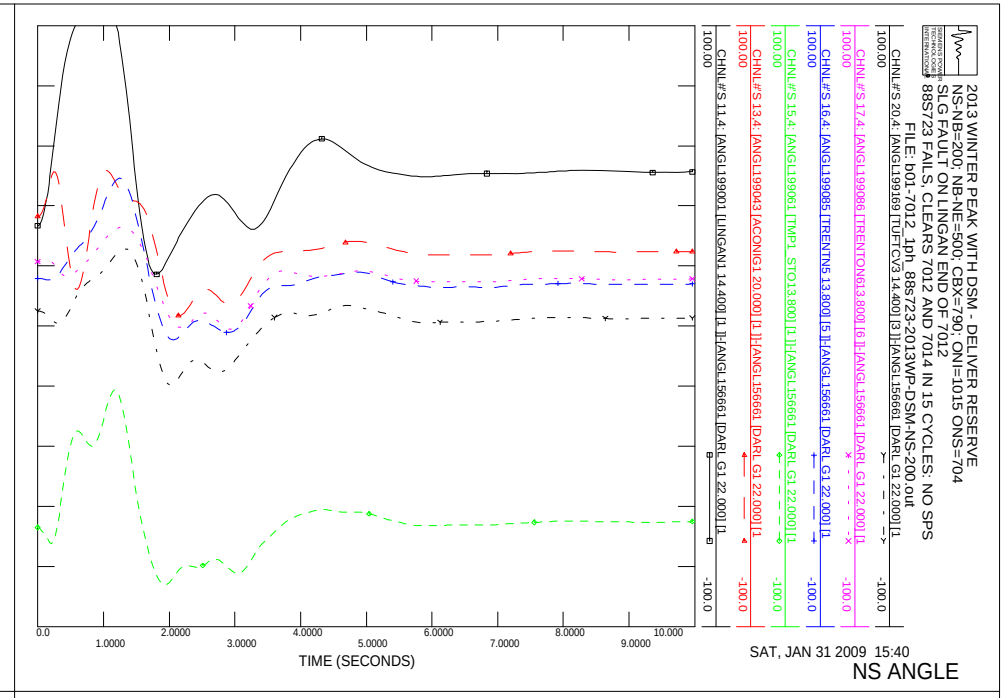
2013 WINTER PEAK WITH DSM - DELIVER RESERVE
NS-NB=200; NB-NE=500; CBX=790; ONI=1015 ONS=704
SLG FAULT ON LINGAN END OF 7012
88S723 FAILS, CLEARS 7012 AND 7014 IN 15 CYCLES: NO SPS
FILE: b01-7012_1ph_88s723-2013WP-DSM-NS-200.out
CHNL#'S 20,4: [ANGL199169 [TUFTCV3 14.400] [3]]-[ANGL156661 [DARL G1 22.000] [1
CHNL#'S 17,4: [ANGL199086 [TRENTON613.800] [6]]-[ANGL156661 [DARL G1 22.000] [1
CHNL#'S 16,4: [ANGL199085 [TRENTN5 13.800] [5]]-[ANGL156661 [DARL G1 22.000] [1
CHNL#'S 15,4: [ANGL199061 [TMP1 STO13.800] [1]]-[ANGL156661 [DARL G1 22.000] [1
CHNL#'S 13,4: [ANGL199043 [ACONIG1 20.000] [1]]-[ANGL156661 [DARL G1 22.000] [1
CHNL#'S 11,4: [ANGL199001 [LINGAN1 14.400] [1]]-[ANGL156661 [DARL G1 22.000] [1
TIME (SECONDS)
SAT, JAN 31 2009 15:40
NS ANGLE

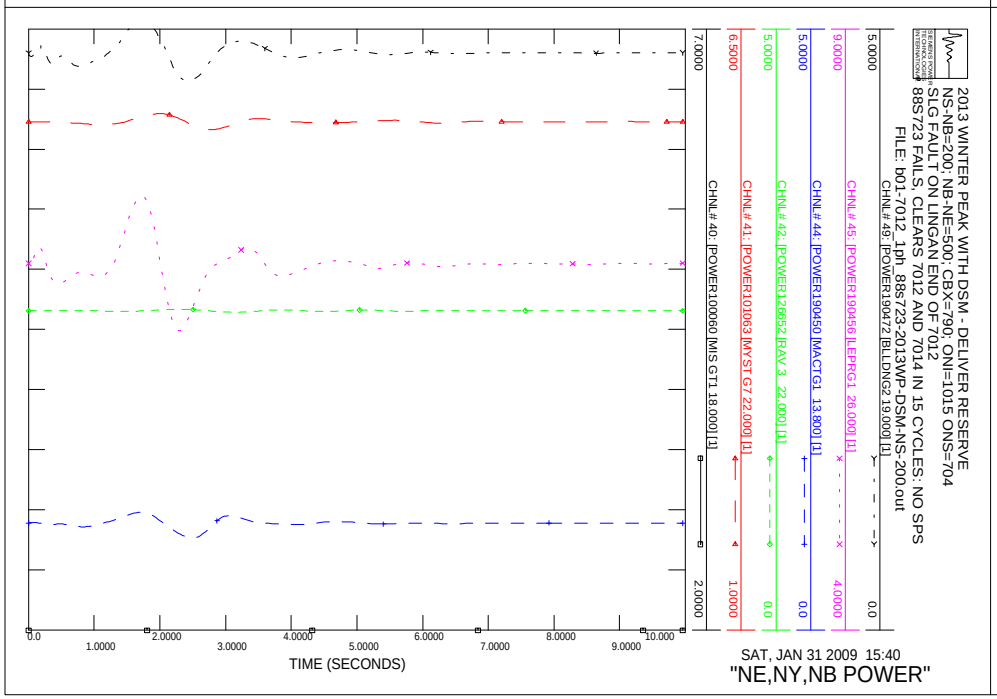
2013 WINTER PEAK WITH DSM - DELIVER RESERVE
NS-NB=200; NB-NE=500; CBX=790; ONI=1015 ONS=704
SLG FAULT ON LINGAN END OF 7012
88S723 FAILS, CLEARS 7012 AND 7014 IN 15 CYCLES: NO SPS
FILE: b01-7012_1ph_88s723-2013WP-DSM-NS-200.out
CHNL# 49: [POWER190472 [BLLDNG2 19.000] [1]
CHNL# 45: [POWER190456 [LEPRG1 26.000] [1]
CHNL# 44: [POWER190450 [MACTG1 13.800] [1]
CHNL# 42: [POWER126652 [RAV 3 22.000] [1]
CHNL# 41: [POWER101063 [MYST G7 22.000] [1]
CHNL# 40: [POWER100060 [MIS GT1 18.000] [1]
TIME (SECONDS)
SAT, JAN 31 2009 15:40
"NE,NY,NB POWER"

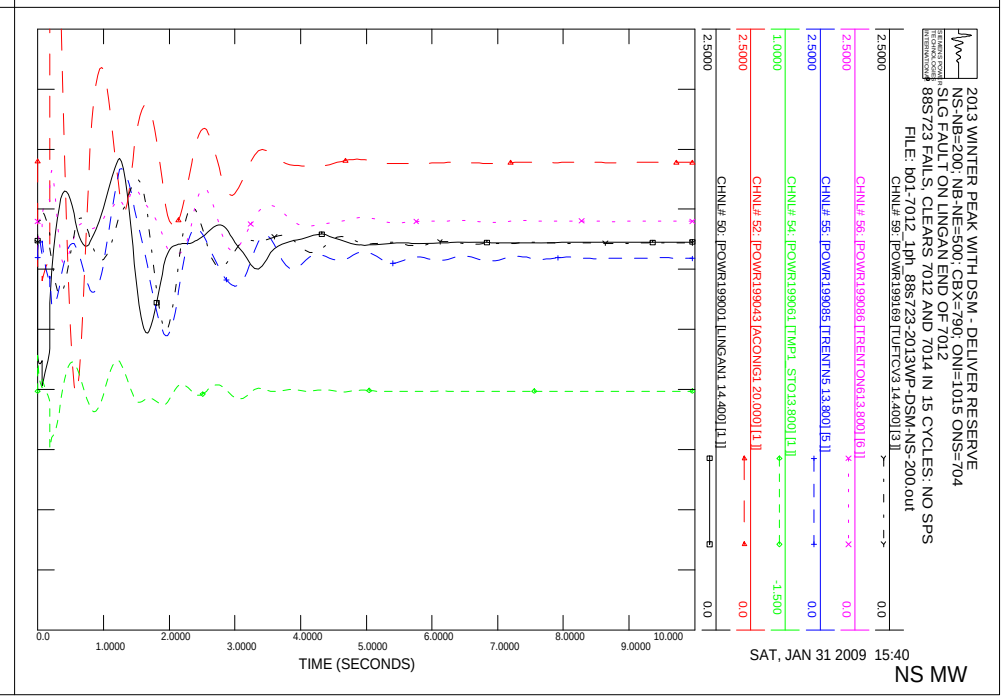
2013 WINTER PEAK WITH DSM - DELIVER RESERVE
NS-NB=200; NB-NE=500; CBX=790; ONI=1015 ONS=704
SLG FAULT ON LINGAN END OF 7012
88S723 FAILS, CLEARS 7012 AND 7014 IN 15 CYCLES: NO SPS
FILE: b01-7012_1ph_88s723-2013WP-DSM-NS-200.out
CHNL# 59: [POWR199169 [TUFTCV3 14.400] [3]]
CHNL# 56: [POWR199086 [TRENTON613.800] [6]]
CHNL# 55: [POWR199085 [TRENTN5 13.800] [5]]
CHNL# 54: [POWR199061 [TMP1 STO13.800] [1]]
CHNL# 52: [POWR199043 [ACONIG1 20.000] [1]]
CHNL# 50: [POWR199001 [LINGAN1 14.400] [1]]
TIME (SECONDS)
SAT, JAN 31 2009 15:40
NS MW

2013 WINTER PEAK WITH DSM - DELIVER RESERVE
NS-NB=200; NB-NE=500; CBX=790; ONI=1015 ONS=704
SLG FAULT ON LINGAN END OF 7012
88S723 FAILS, CLEARS 7012 AND 7014 IN 15 CYCLES: NO SPS
FILE: b01-7012_1ph_88s723-2013WP-DSM-NS-200.out
CHNL# 119: [VARS IR141-DIGBY]
CHNL# 118: [VARS IR137-STATIA]
CHNL# 117: [VARS IR114-GLENDHU]
CHNL# 116: [VARS IR84-DALHOUSIE]
CHNL# 115: [VARS IR82_NUTTBY]
CHNL# 114: [VARS IR45_AMHERST]
0.50000
-0.5000
0.0
0.0
1.0000
TIME (SECONDS)
SAT, JAN 31 2009 15:40
NS WIND MV

2013 WINTER PEAK WITH DSM - DELIVER RESERVE
NS-NB=200; NB-NE=500; CBX=790; ONI=1015 ONS=704
SLG FAULT ON LINGAN END OF 7012
88S723 FAILS, CLEARS 7012 AND 7014 IN 15 CYCLES: NO SPS
FILE: b01-7012_1ph_88s723-2013WP-DSM-NS-200.out
CHNL# 79: [POWER IR141-DIGBY]
CHNL# 78: [POWER IR137-STATIA]
CHNL# 77: [POWER IR114-GLENDHU]
CHNL# 76: [POWER IR84-DALHOUSIE]
CHNL# 75: [POWER IR82_NUTTBY]
CHNL# 74: [POWER IR45_AMHERST]
1.0000
0.0
TIME (SECONDS)
SAT, JAN 31 2009 15:40
NS WIND MW

2013 WINTER PEAK WITH DSM - DELIVER RESERVE
NS-NB=200; NB-NE=500; CBX=790; ONI=1015 ONS=704
SLG FAULT ON LINGAN END OF 7012
88S723 FAILS, CLEARS 7012 AND 7014 IN 15 CYCLES: NO SPS
FILE: b01-7012_1ph_88s723-2013WP-DSM-NS-200.out
CHNL# 133: [VOLT199125 IONSLOW 345.00]
CHNL# 132: [VOLT199120 IHOPEWELL345.00]
CHNL# 131: [VOLT199045 IWOODBINE345.00]
CHNL# 130: [VOLT190320 ISALBRY 345.00]
CHNL# 128: [VOLT190004 IKESWICK 345.00]
CHNL# 127: [VOLT 70002 IORRINGTN345.00]
1.1000
0.90000
TIME (SECONDS)
SAT, JAN 31 2009 15:40
"345KV VOLTAGE"

2013 WINTER PEAK WITH DSM - DELIVER RESERVE
NS-NB=200; NB-NE=500; CBX=790; ONI=1015 ONS=704
SLG FAULT ON LINGAN END OF 7012
88S723 FAILS, CLEARS 7012 AND 7014 IN 15 CYCLES: NO SPS
FILE: b01-7012_1ph_88s723-2013WP-DSM-NS-200.out
CHNL# 125: 60*(1+[FREQ199125 IONSLOW 345.00])
CHNL# 124: 60*(1+[FREQ199120 IHOPEWELL345.00])
CHNL# 123: 60*(1+[FREQ199045 IWOODBINE345.00])
CHNL# 122: 60*(1+[FREQ190320 ISALBRY 345.00])
CHNL# 121: 60*(1+[FREQ190197 IC.COVE 345.00])
CHNL# 120: 60*(1+[FREQ 70002 IORRINGTN345.00])
60.500
59.500
TIME (SECONDS)
SAT, JAN 31 2009 15:40
FREQUENCY HZ

2013 WINTER PEAK WITH DSM - DELIVER RESERVE
NS-NB=200; NB-NE=500; CBX=790; ONI=1015 ONS=704
SLG FAULT ON LINGAN END OF 7012
88S723 FAILS, CLEARS 7012 AND 7014 IN 15 CYCLES: NO SPS
FILE: b01-7012_1ph_88s723-2013WP-DSM-NS-200.out
CHNL# 146: [VOLT199280 [TUSKET A138.00]]
CHNL# 145: [VOLT199193 [HHWAS 138.00]]
CHNL# 144: [VOLT199165 [TUFTCOVE138.00]]
CHNL# 143: [VOLT199135 [SPRNGHLL138.00]]
CHNL# 142: [VOLT199090 [SON-TREN138.00]]
CHNL# 141: [VOLT199051 [HASTINGS138.00]]
1.2000
0.70000
0.0
1.0000
2.0000
3.0000
4.0000
5.0000
6.0000
7.0000
8.0000
9.0000
10.000
TIME (SECONDS)
SAT, JAN 31 2009 15:40
138KV BUS VOLTS

2013 WINTER PEAK WITH DSM - DELIVER RESERVE
NS-NB=200; NB-NE=500; CBX=790; ONI=1015 ONS=704
SLG FAULT ON LINGAN END OF 7012
88S723 FAILS, CLEARS 7012 AND 7014 IN 15 CYCLES: NO SPS
FILE: b01-7012_1ph_88s723-2013WP-DSM-NS-200.out
CHNL# 140: [VOLT199240 [BWATER A230.00]]
CHNL# 139: [VOLT199200 [BRUSHY 230.00]]
CHNL# 138: [VOLT199130 [ONSLOW 230.00]]
CHNL# 137: [VOLT199050 [HASTINGS230.00]]
CHNL# 136: [VOLT199044 [PT.ACONI230.00]]
CHNL# 135: [VOLT199000 [LINGAN 230.00]]
1.2000
0.70000
0.0
1.0000
2.0000
3.0000
4.0000
5.0000
6.0000
7.0000
8.0000
9.0000
10.000
TIME (SECONDS)
SAT, JAN 31 2009 15:40
230KV BUS VOLTS

2013 WINTER PEAK WITH DSM - DELIVER RESERVE
NS-NB=200; NB-NE=500; CBX=790; ONI=1015 ONS=704
SLG FAULT ON LINGAN END OF 7012
88S723 FAILS, CLEARS 7012 AND 7014 IN 15 CYCLES: NO SPS
FILE: b01-7012_1ph_88s723-2013WP-DSM-NS-200.out
CHNL# 217: [L6513MW]
CHNL# 215: [L6503MW]
CHNL# 197: [L8003MW]
CHNL# 195: [L8004MW]
CHNL# 193: [L8001MW]
CHNL# 221: [L3001MW]
250.00
500.00
1000.0
0.0
-250.0
-1000.
0.0
1.0000
2.0000
3.0000
4.0000
5.0000
6.0000
7.0000
8.0000
9.0000
10.000
TIME (SECONDS)
SAT, JAN 31 2009 15:40
LINE FLOW MW

2013 WINTER PEAK WITH DSM - DELIVER RESERVE
NS-NB=200; NB-NE=500; CBX=790; ONI=1015 ONS=704
SLG FAULT ON LINGAN END OF 7012
88S723 FAILS, CLEARS 7012 AND 7014 IN 15 CYCLES: NO SPS
FILE: b01-7012_1ph_88s723-2013WP-DSM-NS-200.out
CHNL# 154: [IR141-DIGBYH69.0 VOLTS]
CHNL# 153: [IR137-STATIG25.0 VOLTS]
CHNL# 152: [IR114-GLENDH138.0 VOLTS]
CHNL# 151: [IR84-DALHOHV230.0 VOLTS]
CHNL# 150: [IR82-NUTBHV69.0 VOLTS]
CHNL# 149: [IR45-AMHERTP138.0 VOLTS]
1.2000
0.70000
0.0
1.0000
2.0000
3.0000
4.0000
5.0000
6.0000
7.0000
8.0000
9.0000
10.000
TIME (SECONDS)
SAT, JAN 31 2009 15:40
WIND BUS VOLTS

2013 WINTER PEAK WITH DSM - DELIVER RESERVE
NS-NB=200; NB-NE=500; CBX=790; ONI=1015 ONS=704
SLG FAULT ON LINGAN END OF 7012
88S723 FAILS, CLEARS 7012 AND 7014 IN 15 CYCLES: SPS TRIPS U
FILE: b01s-7012_1ph_88s723-2013WP-DSM-NS-200.out
CHNL#S 20:4 [ANGL199169 [TUFTCV3 14.400] [3]] [ANGL156661 [DARL G1 22.000] [1]] 100.00 -100.0
CHNL#S 17:4 [ANGL199086 [TRENTON613.800] [6]] [ANGL156661 [DARL G1 22.000] [1]] 100.00 -100.0
CHNL#S 16:4 [ANGL199085 [TRENTN5 13.800] [5]] [ANGL156661 [DARL G1 22.000] [1]] 100.00 -100.0
CHNL#S 15:4 [ANGL199061 [TMP1 STO13.800] [1]] [ANGL156661 [DARL G1 22.000] [1]] 100.00 -100.0
CHNL#S 13:4 [ANGL199043 [ACONIG1 20.000] [1]] [ANGL156661 [DARL G1 22.000] [1]] 100.00 -100.0
CHNL#S 11:4 [ANGL199001 [LINGAN1 14.400] [1]] [ANGL156661 [DARL G1 22.000] [1]] 100.00 -100.0
0.0 1.0000 2.0000 3.0000 4.0000 5.0000 6.0000 7.0000 8.0000 9.0000 10.000
TIME (SECONDS)
SAT, JAN 31 2009 15:40
NS ANGLE

2013 WINTER PEAK WITH DSM - DELIVER RESERVE
NS-NB=200; NB-NE=500; CBX=790; ONI=1015 ONS=704
SLG FAULT ON LINGAN END OF 7012
88S723 FAILS, CLEARS 7012 AND 7014 IN 15 CYCLES: SPS TRIPS U
FILE: b01s-7012_1ph_88s723-2013WP-DSM-NS-200.out
CHNL#S 10:4 [ANGL190472 [BLLDNG2 19.000] [1]] [ANGL156661 [DARL G1 22.000] [1]] 100.00 -100.0
CHNL#S 6:4 [ANGL190456 [LEPRG1 26.000] [1]] [ANGL156661 [DARL G1 22.000] [1]] 100.00 -100.0
CHNL#S 5:4 [ANGL190450 [MACTG1 13.800] [1]] [ANGL156661 [DARL G1 22.000] [1]] 100.00 -100.0
CHNL#S 3:4 [ANGL126652 [RAV 3 22.000] [1]] [ANGL156661 [DARL G1 22.000] [1]] 100.00 -100.0
CHNL#S 2:4 [ANGL101063 [MYST G7 22.000] [1]] [ANGL156661 [DARL G1 22.000] [1]] 100.00 -100.0
CHNL#S 1:4 [ANGL100060 [MIS GT1 18.000] [1]] [ANGL156661 [DARL G1 22.000] [1]] 100.00 -100.0
0.0 1.0000 2.0000 3.0000 4.0000 5.0000 6.0000 7.0000 8.0000 9.0000 10.000
TIME (SECONDS)
SAT, JAN 31 2009 15:40
"NE,NY,NB ANGLE"

2013 WINTER PEAK WITH DSM - DELIVER RESERVE
NS-NB=200; NB-NE=500; CBX=790; ONI=1015 ONS=704
SLG FAULT ON LINGAN END OF 7012
88S723 FAILS, CLEARS 7012 AND 7014 IN 15 CYCLES: SPS TRIPS U
FILE: b01s-7012_1ph_88s723-2013WP-DSM-NS-200.out
CHNL# 59: [POWR199169 [TUFTCV3 14.400] [3]] 2.5000 0.0
CHNL# 56: [POWR199086 [TRENTON613.800] [6]] 2.5000 0.0
CHNL# 55: [POWR199085 [TRENTN5 13.800] [5]] 2.5000 0.0
CHNL# 54: [POWR199061 [TMP1 STO13.800] [1]] 1.0000 -1.500
CHNL# 52: [POWR199043 [ACONIG1 20.000] [1]] 2.5000 0.0
CHNL# 50: [POWR199001 [LINGAN1 14.400] [1]] 2.5000 0.0
0.0 1.0000 2.0000 3.0000 4.0000 5.0000 6.0000 7.0000 8.0000 9.0000 10.000
TIME (SECONDS)
SAT, JAN 31 2009 15:40
NS MW

2013 WINTER PEAK WITH DSM - DELIVER RESERVE
NS-NB=200; NB-NE=500; CBX=790; ONI=1015 ONS=704
SLG FAULT ON LINGAN END OF 7012
88S723 FAILS, CLEARS 7012 AND 7014 IN 15 CYCLES: SPS TRIPS U
FILE: b01s-7012_1ph_88s723-2013WP-DSM-NS-200.out
CHNL# 49: [POWER190472 [BLLDNG2 19.000] [1]] 5.0000 0.0
CHNL# 45: [POWER190456 [LEPRG1 26.000] [1]] 9.0000 4.0000
CHNL# 44: [POWER190450 [MACTG1 13.800] [1]] 5.0000 0.0
CHNL# 42: [POWER126652 [RAV 3 22.000] [1]] 5.0000 0.0
CHNL# 41: [POWER101063 [MYST G7 22.000] [1]] 6.5000 1.0000
CHNL# 40: [POWER100060 [MIS GT1 18.000] [1]] 7.0000 2.0000
0.0 1.0000 2.0000 3.0000 4.0000 5.0000 6.0000 7.0000 8.0000 9.0000 10.000
TIME (SECONDS)
SAT, JAN 31 2009 15:40
"NE,NY,NB POWER"

2013 WINTER PEAK WITH DSM - DELIVER RESERVE
NS-NB=200; NB-NE=500; CBX=790; ONI=1015 ONS=704
SLG FAULT ON LINGAN END OF 7012
88S723 FAILS, CLEARS 7012 AND 7014 IN 15 CYCLES: SPS TRIPS U
FILE: b01s-7012_1ph_88s723-2013WP-DSM-NS-200.out
CHNL# 119: [VARS IR141-DIGBY]
CHNL# 118: [VARS IR137-STATIA]
CHNL# 117: [VARS IR114-GLENDHU]
CHNL# 116: [VARS IR84-DALHOUSIE]
CHNL# 115: [VARS IR82_NUTTBY]
CHNL# 114: [VARS IR45_AMHERST]
0.50000
-0.5000
0.0
1.0000
2.0000
3.0000
4.0000
5.0000
6.0000
7.0000
8.0000
9.0000
10.000
TIME (SECONDS)
SAT, JAN 31 2009 15:40
NS WIND MV

2013 WINTER PEAK WITH DSM - DELIVER RESERVE
NS-NB=200; NB-NE=500; CBX=790; ONI=1015 ONS=704
SLG FAULT ON LINGAN END OF 7012
88S723 FAILS, CLEARS 7012 AND 7014 IN 15 CYCLES: SPS TRIPS U
FILE: b01s-7012_1ph_88s723-2013WP-DSM-NS-200.out
CHNL# 79: [POWER IR141-DIGBY]
CHNL# 78: [POWER IR137-STATIA]
CHNL# 77: [POWER IR114-GLENDHU]
CHNL# 76: [POWER IR84-DALHOUSIE]
CHNL# 75: [POWER IR82_NUTTBY]
CHNL# 74: [POWER IR45_AMHERST]
1.0000
0.0
0.0
1.0000
2.0000
3.0000
4.0000
5.0000
6.0000
7.0000
8.0000
9.0000
10.000
TIME (SECONDS)
SAT, JAN 31 2009 15:40
NS WIND MW

2013 WINTER PEAK WITH DSM - DELIVER RESERVE
NS-NB=200; NB-NE=500; CBX=790; ONI=1015 ONS=704
SLG FAULT ON LINGAN END OF 7012
88S723 FAILS, CLEARS 7012 AND 7014 IN 15 CYCLES: SPS TRIPS U
FILE: b01s-7012_1ph_88s723-2013WP-DSM-NS-200.out
CHNL# 133: [VOLT199125 [ONSLOW 345.00]]
CHNL# 132: [VOLT199120 [HOPEWELL 345.00]]
CHNL# 131: [VOLT199045 [WOODBINE345.00]]
CHNL# 130: [VOLT190320 [SALBRY 345.00]]
CHNL# 128: [VOLT190004 [KESWICK 345.00]]
CHNL# 127: [VOLT 70002 [ORRINGTN345.00]]
1.1000
0.90000
0.0
1.0000
2.0000
3.0000
4.0000
5.0000
6.0000
7.0000
8.0000
9.0000
10.000
TIME (SECONDS)
SAT, JAN 31 2009 15:40
"345KV VOLTAGE"

2013 WINTER PEAK WITH DSM - DELIVER RESERVE
NS-NB=200; NB-NE=500; CBX=790; ONI=1015 ONS=704
SLG FAULT ON LINGAN END OF 7012
88S723 FAILS, CLEARS 7012 AND 7014 IN 15 CYCLES: SPS TRIPS U
FILE: b01s-7012_1ph_88s723-2013WP-DSM-NS-200.out
CHNL# 125: 60*(1+[FREQ199125 [ONSLOW 345.00]])
CHNL# 124: 60*(1+[FREQ199120 [HOPEWELL 345.00]])
CHNL# 123: 60*(1+[FREQ199045 [WOODBINE345.00]])
CHNL# 122: 60*(1+[FREQ190320 [SALBRY 345.00]])
CHNL# 121: 60*(1+[FREQ190197 [C.COVE 345.00]])
CHNL# 120: 60*(1+[FREQ 70002 [ORRINGTN345.00]])
60.500
59.500
0.0
1.0000
2.0000
3.0000
4.0000
5.0000
6.0000
7.0000
8.0000
9.0000
10.000
TIME (SECONDS)
SAT, JAN 31 2009 15:40
FREQUENCY HZ

2013 WINTER PEAK WITH DSM - DELIVER RESERVE
NS-NB=200; NB-NE=500; CBX=790; ONI=1015 ONS=704
SLG FAULT ON LINGAN END OF 7012
88S723 FAILS, CLEARS 7012 AND 7014 IN 15 CYCLES: SPS TRIPS U
FILE: b01s-7012_1ph_88s723-2013WP-DSM-NS-200.out
CHNL# 146: [VOLT199280 [TUSKET A138.00]] 0.70000
CHNL# 145: [VOLT199193 [HHWAS 138.00]] 0.70000
CHNL# 144: [VOLT199165 [TUFTCOVE138.00]] 0.70000
CHNL# 143: [VOLT199138 [SPRNGHILL138.00]] 0.70000
CHNL# 142: [VOLT199090 [SON-TREN138.00]] 0.70000
CHNL# 141: [VOLT199051 [HASTINGS138.00]] 0.70000
TIME (SECONDS)
SAT, JAN 31 2009 15:40
138KV BUS VOLTS

2013 WINTER PEAK WITH DSM - DELIVER RESERVE
NS-NB=200; NB-NE=500; CBX=790; ONI=1015 ONS=704
SLG FAULT ON LINGAN END OF 7012
88S723 FAILS, CLEARS 7012 AND 7014 IN 15 CYCLES: SPS TRIPS U
FILE: b01s-7012_1ph_88s723-2013WP-DSM-NS-200.out
CHNL# 140: [VOLT199240 [BWATER A230.00]] 0.70000
CHNL# 139: [VOLT199200 [BRUSHY 230.00]] 0.70000
CHNL# 138: [VOLT199130 [ONSLOW 230.00]] 0.70000
CHNL# 137: [VOLT199050 [HASTINGS230.00]] 0.70000
CHNL# 136: [VOLT199044 [PT.ACON230.00]] 0.70000
CHNL# 135: [VOLT199000 [LINGAN 230.00]] 0.70000
TIME (SECONDS)
SAT, JAN 31 2009 15:40
230KV BUS VOLTS

2013 WINTER PEAK WITH DSM - DELIVER RESERVE
NS-NB=200; NB-NE=500; CBX=790; ONI=1015 ONS=704
SLG FAULT ON LINGAN END OF 7012
88S723 FAILS, CLEARS 7012 AND 7014 IN 15 CYCLES: SPS TRIPS U
FILE: b01s-7012_1ph_88s723-2013WP-DSM-NS-200.out
CHNL# 217: [L6513NMW] -250.0
CHNL# 215: [L6503MW] 0.0
CHNL# 197: [L8003MW] 0.0
CHNL# 195: [L8004MW] 0.0
CHNL# 193: [L8001MW] -1000.
CHNL# 221: [L3001MW] -1000.
TIME (SECONDS)
SAT, JAN 31 2009 15:40
LINE FLOW MW

2013 WINTER PEAK WITH DSM - DELIVER RESERVE
NS-NB=200; NB-NE=500; CBX=790; ONI=1015 ONS=704
SLG FAULT ON LINGAN END OF 7012
88S723 FAILS, CLEARS 7012 AND 7014 IN 15 CYCLES: SPS TRIPS U
FILE: b01s-7012_1ph_88s723-2013WP-DSM-NS-200.out
CHNL# 154: [IR141-DIGBYH69.0 VOLTS] 0.70000
CHNL# 153: [IR137-STATIG25.0 VOLTS] 0.70000
CHNL# 152: [IR114-GLENDH138.0 VOLTS] 0.70000
CHNL# 151: [IR84-DALHOHV230.0 VOLTS] 0.70000
CHNL# 150: [IR82_NUTBHV69.0 VOLTS] 0.70000
CHNL# 149: [IR45_AMHERTP138.0 VOLTS] 0.70000
TIME (SECONDS)
SAT, JAN 31 2009 15:40
WIND BUS VOLTS

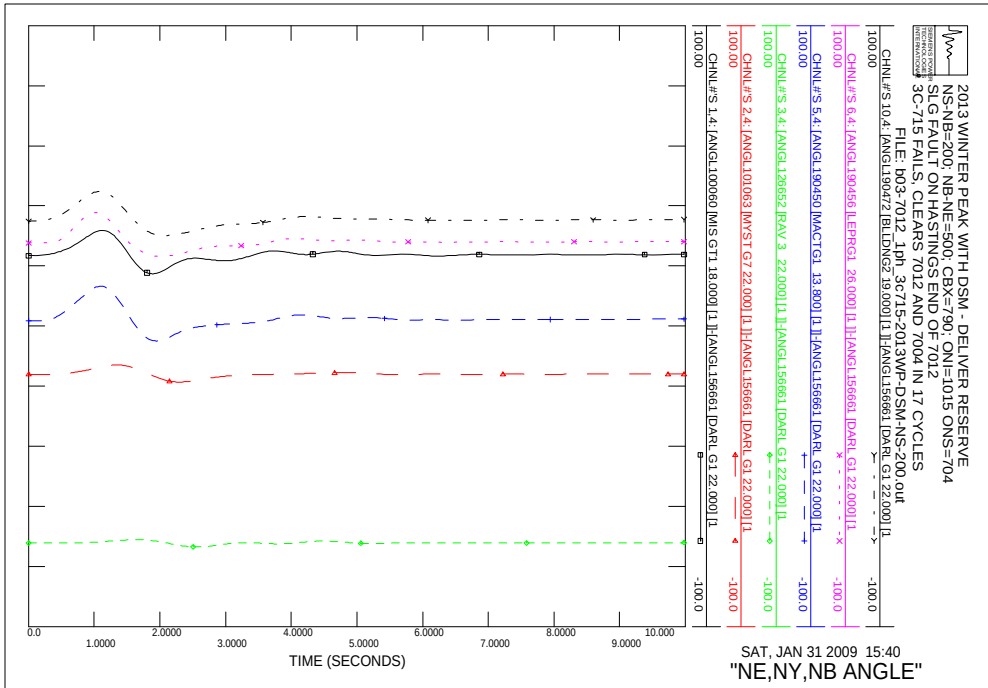
2013 WINTER PEAK WITH DSM - DELIVER RESERVE
NS-NB=200; NB-NE=500; CBX=790; ONI=1015 ONS=704
SLG FAULT ON HASTINGS END OF 7012
3C-715 FAILS, CLEARS 7012 AND 7004 IN 17 CYCLES
FILE: b03-7012_1ph_3c715-2013WP-DSM-NS-200.out
CHNL#'S 10,4: [ANGL190472 [BLLDNG2 19.000] [1]]-[ANGL156661 [DARL G1 22.000] [1
CHNL#'S 6,4: [ANGL190456 [LEPRG1 26.000] [1]]-[ANGL156661 [DARL G1 22.000] [1
CHNL#'S 5,4: [ANGL190450 [MACTG1 13.800] [1]]-[ANGL156661 [DARL G1 22.000] [1
CHNL#'S 3,4: [ANGL126652 [RAV 3 22.000] [1]]-[ANGL156661 [DARL G1 22.000] [1
CHNL#'S 2,4: [ANGL101063 [MYST G7 22.000] [1]]-[ANGL156661 [DARL G1 22.000] [1
CHNL#'S 1,4: [ANGL100060 [MIS GT1 18.000] [1]]-[ANGL156661 [DARL G1 22.000] [1
100.00
-100.0
0.0
1.0000
2.0000
3.0000
4.0000
5.0000
6.0000
7.0000
8.0000
9.0000
10.000
TIME (SECONDS)
SAT, JAN 31 2009 15:40
"NE,NY,NB ANGLE"

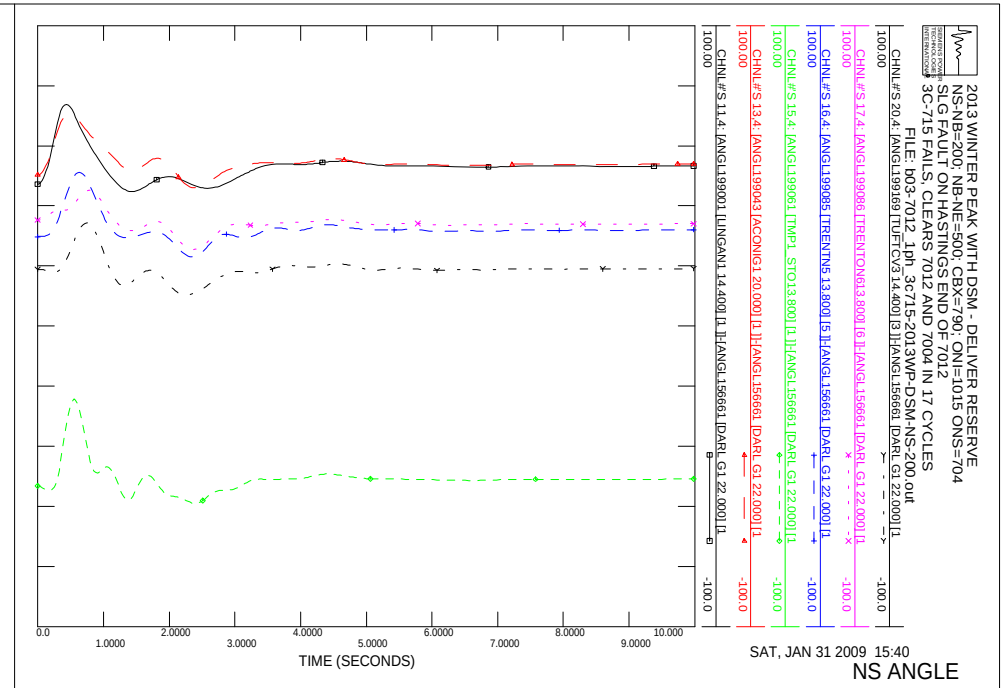
2013 WINTER PEAK WITH DSM - DELIVER RESERVE
NS-NB=200; NB-NE=500; CBX=790; ONI=1015 ONS=704
SLG FAULT ON HASTINGS END OF 7012
3C-715 FAILS, CLEARS 7012 AND 7004 IN 17 CYCLES
FILE: b03-7012_1ph_3c715-2013WP-DSM-NS-200.out
CHNL#'S 20,4: [ANGL199169 [TUFTCV3 14.400] [3]]-[ANGL156661 [DARL G1 22.000] [1
CHNL#'S 17,4: [ANGL199086 [TRENTON613.800] [6]]-[ANGL156661 [DARL G1 22.000] [1
CHNL#'S 16,4: [ANGL199085 [TRENTN5 13.800] [5]]-[ANGL156661 [DARL G1 22.000] [1
CHNL#'S 15,4: [ANGL199061 [TMP1 STO13.800] [1]]-[ANGL156661 [DARL G1 22.000] [1
CHNL#'S 13,4: [ANGL199043 [ACONIG1 20.000] [1]]-[ANGL156661 [DARL G1 22.000] [1
CHNL#'S 11,4: [ANGL199001 [LINGAN1 14.400] [1]]-[ANGL156661 [DARL G1 22.000] [1
100.00
-100.0
0.0
1.0000
2.0000
3.0000
4.0000
5.0000
6.0000
7.0000
8.0000
9.0000
10.000
TIME (SECONDS)
SAT, JAN 31 2009 15:40
NS ANGLE

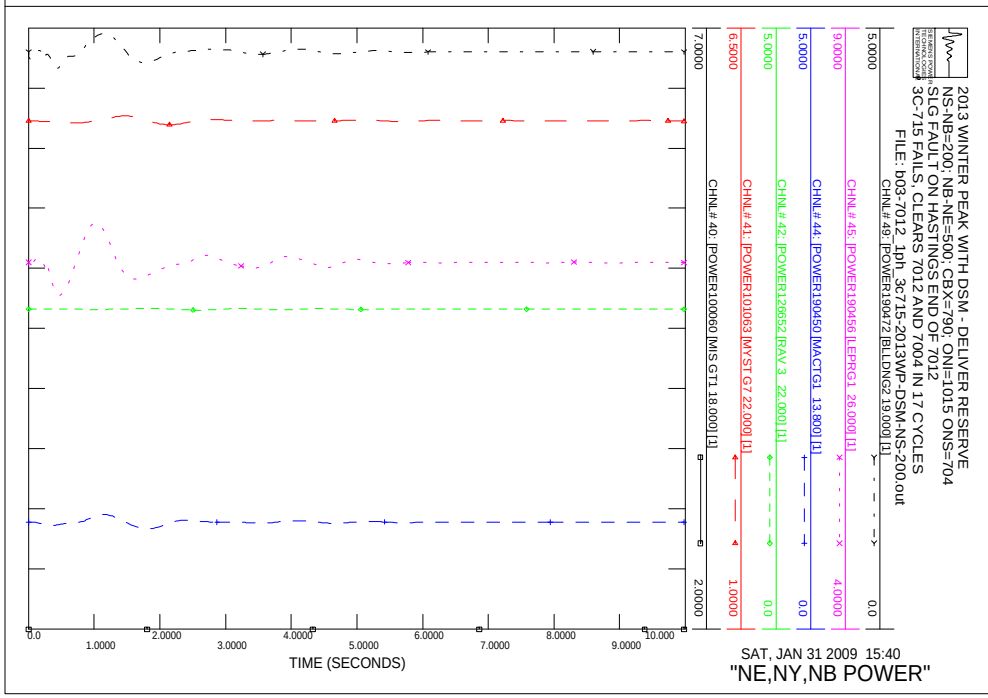
2013 WINTER PEAK WITH DSM - DELIVER RESERVE
NS-NB=200; NB-NE=500; CBX=790; ONI=1015 ONS=704
SLG FAULT ON HASTINGS END OF 7012
3C-715 FAILS, CLEARS 7012 AND 7004 IN 17 CYCLES
FILE: b03-7012_1ph_3c715-2013WP-DSM-NS-200.out
CHNL# 49: [POWER190472 [BLLDNG2 19.000] [1]
CHNL# 45: [POWER190456 [LEPRG1 26.000] [1]
CHNL# 44: [POWER190450 [MACTG1 13.800] [1]
CHNL# 42: [POWER126652 [RAV 3 22.000] [1]
CHNL# 41: [POWER101063 [MYST G7 22.000] [1]
CHNL# 40: [POWER100060 [MIS GT1 18.000] [1]
5.0000
0.0
9.0000
4.0000
5.0000
0.0
5.0000
0.0
6.5000
1.0000
7.0000
2.0000
0.0
1.0000
2.0000
3.0000
4.0000
5.0000
6.0000
7.0000
8.0000
9.0000
10.000
TIME (SECONDS)
SAT, JAN 31 2009 15:40
"NE,NY,NB POWER"

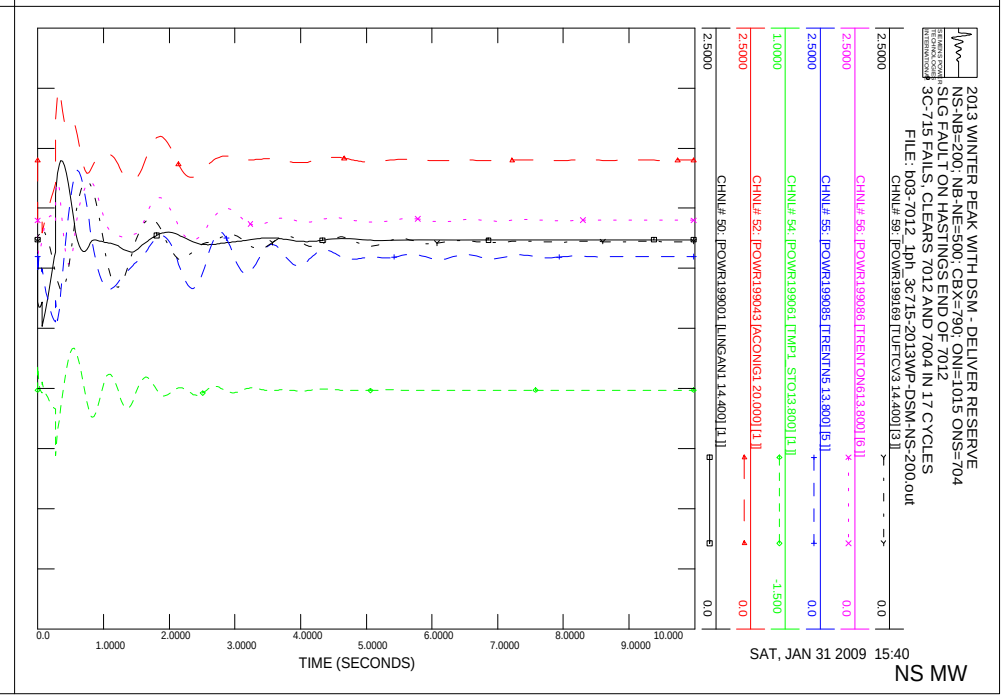
2013 WINTER PEAK WITH DSM - DELIVER RESERVE
NS-NB=200; NB-NE=500; CBX=790; ONI=1015 ONS=704
SLG FAULT ON HASTINGS END OF 7012
3C-715 FAILS, CLEARS 7012 AND 7004 IN 17 CYCLES
FILE: b03-7012_1ph_3c715-2013WP-DSM-NS-200.out
CHNL# 59: [POWR199169 [TUFTCV3 14.400] [3]]
CHNL# 56: [POWR199086 [TRENTON613.800] [6]]
CHNL# 55: [POWR199085 [TRENTN5 13.800] [5]]
CHNL# 54: [POWR199061 [TMP1 STO13.800] [1]]
CHNL# 52: [POWR199043 [ACONIG1 20.000] [1]]
CHNL# 50: [POWR199001 [LINGAN1 14.400] [1]]
2.5000
0.0
2.5000
0.0
2.5000
0.0
1.0000
-1.500
2.5000
0.0
2.5000
0.0
0.0
1.0000
2.0000
3.0000
4.0000
5.0000
6.0000
7.0000
8.0000
9.0000
10.000
TIME (SECONDS)
SAT, JAN 31 2009 15:40
NS MW

2013 WINTER PEAK WITH DSM - DELIVER RESERVE
NS-NB=200; NB-NE=500; CBX=790; ONI=1015 ONS=704
SLG FAULT ON HASTINGS END OF 7012
3C-715 FAILS, CLEARS 7012 AND 7004 IN 17 CYCLES
FILE: b03-7012_1ph_3c715-2013WP-DSM-NS-200.out
CHNL# 119: [VARS IR141-DIGBY]
CHNL# 118: [VARS IR137-STATIA]
CHNL# 117: [VARS IR114-GLENDHU]
CHNL# 116: [VARS IR84-DALHOUSIE]
CHNL# 115: [VARS IR82_NUTTBY]
CHNL# 114: [VARS IR45_AMHERST]
0.50000
-0.5000
0.0
1.0000
2.0000
3.0000
4.0000
5.0000
6.0000
7.0000
8.0000
9.0000
10.000
TIME (SECONDS)
SAT, JAN 31 2009 15:40
NS WIND MV

2013 WINTER PEAK WITH DSM - DELIVER RESERVE
NS-NB=200; NB-NE=500; CBX=790; ONI=1015 ONS=704
SLG FAULT ON HASTINGS END OF 7012
3C-715 FAILS, CLEARS 7012 AND 7004 IN 17 CYCLES
FILE: b03-7012_1ph_3c715-2013WP-DSM-NS-200.out
CHNL# 79: [POWER IR141-DIGBY]
CHNL# 78: [POWER IR137-STATIA]
CHNL# 77: [POWER IR114-GLENDHU]
CHNL# 76: [POWER IR84-DALHOUSIE]
CHNL# 75: [POWER IR82_NUTTBY]
CHNL# 74: [POWER IR45_AMHERST]
1.0000
0.0
1.0000
2.0000
3.0000
4.0000
5.0000
6.0000
7.0000
8.0000
9.0000
10.000
TIME (SECONDS)
SAT, JAN 31 2009 15:40
NS WIND MW

2013 WINTER PEAK WITH DSM - DELIVER RESERVE
NS-NB=200; NB-NE=500; CBX=790; ONI=1015 ONS=704
SLG FAULT ON HASTINGS END OF 7012
3C-715 FAILS, CLEARS 7012 AND 7004 IN 17 CYCLES
FILE: b03-7012_1ph_3c715-2013WP-DSM-NS-200.out
CHNL# 133: [VOLT199125 [ONSLOW 345.00]]
CHNL# 132: [VOLT199120 [HOPEWELL 345.00]]
CHNL# 131: [VOLT199045 [WOODBINE345.00]]
CHNL# 130: [VOLT190320 [SALBRY 345.00]]
CHNL# 128: [VOLT190004 [KESWICK 345.00]]
CHNL# 127: [VOLT 70002 [ORRINGTN345.00]]
1.1000
0.90000
0.0
1.0000
2.0000
3.0000
4.0000
5.0000
6.0000
7.0000
8.0000
9.0000
10.000
TIME (SECONDS)
SAT, JAN 31 2009 15:40
"345KV VOLTAGE"

2013 WINTER PEAK WITH DSM - DELIVER RESERVE
NS-NB=200; NB-NE=500; CBX=790; ONI=1015 ONS=704
SLG FAULT ON HASTINGS END OF 7012
3C-715 FAILS, CLEARS 7012 AND 7004 IN 17 CYCLES
FILE: b03-7012_1ph_3c715-2013WP-DSM-NS-200.out
CHNL# 125: 60*(1+[FREQ199125 [ONSLOW 345.00]])
CHNL# 124: 60*(1+[FREQ199120 [HOPEWELL 345.00]])
CHNL# 123: 60*(1+[FREQ199045 [WOODBINE345.00]])
CHNL# 122: 60*(1+[FREQ190320 [SALBRY 345.00]])
CHNL# 121: 60*(1+[FREQ190197 [C.COVE 345.00]])
CHNL# 120: 60*(1+[FREQ 70002 [ORRINGTN345.00]])
60.500
59.500
0.0
1.0000
2.0000
3.0000
4.0000
5.0000
6.0000
7.0000
8.0000
9.0000
10.000
TIME (SECONDS)
SAT, JAN 31 2009 15:40
FREQUENCY HZ

2013 WINTER PEAK WITH DSM - DELIVER RESERVE
NS-NB=200; NB-NE=500; CBX=790; ONI=1015 ONS=704
SLG FAULT ON HASTINGS END OF 7012
3C-715 FAILS, CLEARS 7012 AND 7004 IN 17 CYCLES
FILE: b03-7012_1ph_3c715-2013WP-DSM-NS-200.out
CHNL# 145: [VOLT199193 [HWAS_138.00]]
CHNL# 144: [VOLT199165 [TUFTCOVE138.00]]
CHNL# 143: [VOLT199138 [SPRNGHLL138.00]]
CHNL# 142: [VOLT199090 [SON-TREN138.00]]
CHNL# 141: [VOLT199051 [HASTINGS138.00]]
CHNL# 146: [VOLT199280 [TUSKET_A138.00]]
1.2000
0.70000
0.0
1.0000
2.0000
3.0000
4.0000
5.0000
6.0000
7.0000
8.0000
9.0000
10.000
TIME (SECONDS)
SAT, JAN 31 2009 15:40
138KV BUS VOLTS

2013 WINTER PEAK WITH DSM - DELIVER RESERVE
NS-NB=200; NB-NE=500; CBX=790; ONI=1015 ONS=704
SLG FAULT ON HASTINGS END OF 7012
3C-715 FAILS, CLEARS 7012 AND 7004 IN 17 CYCLES
FILE: b03-7012_1ph_3c715-2013WP-DSM-NS-200.out
CHNL# 139: [VOLT199200 [BRUSHY_230.00]]
CHNL# 138: [VOLT199130 [ONSLOW_230.00]]
CHNL# 137: [VOLT199050 [HASTINGS230.00]]
CHNL# 136: [VOLT199044 [PT.ACONI230.00]]
CHNL# 135: [VOLT199000 [LINGAN_230.00]]
CHNL# 140: [VOLT199240 [BWATER_A230.00]]
1.2000
0.70000
0.0
1.0000
2.0000
3.0000
4.0000
5.0000
6.0000
7.0000
8.0000
9.0000
10.000
TIME (SECONDS)
SAT, JAN 31 2009 15:40
230KV BUS VOLTS

2013 WINTER PEAK WITH DSM - DELIVER RESERVE
NS-NB=200; NB-NE=500; CBX=790; ONI=1015 ONS=704
SLG FAULT ON HASTINGS END OF 7012
3C-715 FAILS, CLEARS 7012 AND 7004 IN 17 CYCLES
FILE: b03-7012_1ph_3c715-2013WP-DSM-NS-200.out
CHNL# 215: [L6503MW1]
CHNL# 197: [L8003MW1]
CHNL# 195: [L8004MW1]
CHNL# 193: [L8001MW1]
CHNL# 221: [L3001MW1]
CHNL# 217: [L6533MW1]
250.00
-250.0
500.00
0.0
1000.0
-1000.
1.2000
0.70000
0.0
1.0000
2.0000
3.0000
4.0000
5.0000
6.0000
7.0000
8.0000
9.0000
10.000
TIME (SECONDS)
SAT, JAN 31 2009 15:40
LINE FLOW MW

2013 WINTER PEAK WITH DSM - DELIVER RESERVE
NS-NB=200; NB-NE=500; CBX=790; ONI=1015 ONS=704
SLG FAULT ON HASTINGS END OF 7012
3C-715 FAILS, CLEARS 7012 AND 7004 IN 17 CYCLES
FILE: b03-7012_1ph_3c715-2013WP-DSM-NS-200.out
CHNL# 153: [IR137-STATIG25.0 VOLTS]
CHNL# 152: [IR114-GLENDH138.0 VOLTS]
CHNL# 151: [IR84-DALHOHV230.0 VOLTS]
CHNL# 150: [IR82_NUTBHV69.0 VOLTS]
CHNL# 149: [IR45_AMHERTP138.0 VOLTS]
CHNL# 154: [IR141-DIGBYH69.0 VOLTS]
1.2000
0.70000
0.0
1.0000
2.0000
3.0000
4.0000
5.0000
6.0000
7.0000
8.0000
9.0000
10.000
TIME (SECONDS)
SAT, JAN 31 2009 15:40
WIND BUS VOLTS

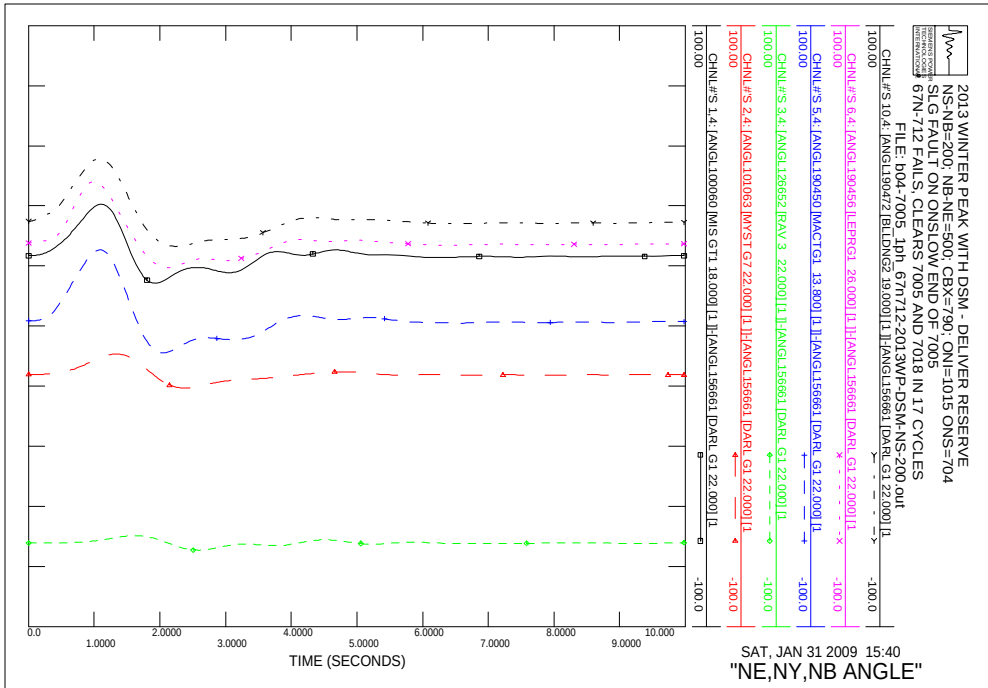
2013 WINTER PEAK WITH DSM - DELIVER RESERVE
NS-NB=200; NB-NE=500; CBX=790; ONI=1015 ONS=704
SLG FAULT ON ONSLOW END OF 7005
67N-712 FAILS, CLEARS 7005 AND 7018 IN 17 CYCLES
FILE: b04-7005_1ph_67n712-2013WP-DSM-NS-200.out
CHNL#S 10,4: [ANGL190472 [BLLDNG2 19.000] [1]]-[ANGL156661 [DARL G1 22.000] [1
CHNL#S 6,4: [ANGL190456 [LEPRG1 26.000] [1]]-[ANGL156661 [DARL G1 22.000] [1
CHNL#S 5,4: [ANGL190450 [MACTG1 13.800] [1]]-[ANGL156661 [DARL G1 22.000] [1
CHNL#S 3,4: [ANGL126652 [RAV 3 22.000] [1]]-[ANGL156661 [DARL G1 22.000] [1
CHNL#S 2,4: [ANGL101063 [MYST G7 22.000] [1]]-[ANGL156661 [DARL G1 22.000] [1
CHNL#S 1,4: [ANGL100060 [MIS GT1 18.000] [1]]-[ANGL156661 [DARL G1 22.000] [1
100.00
-100.0
TIME (SECONDS)
SAT, JAN 31 2009 15:40
"NE,NY,NB ANGLE"

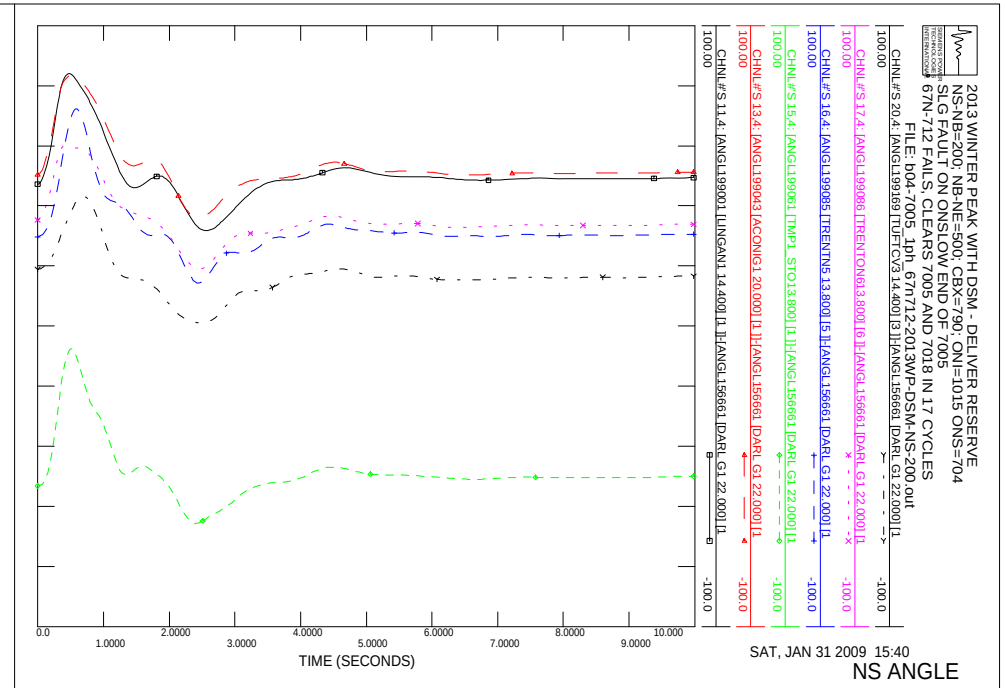
2013 WINTER PEAK WITH DSM - DELIVER RESERVE
NS-NB=200; NB-NE=500; CBX=790; ONI=1015 ONS=704
SLG FAULT ON ONSLOW END OF 7005
67N-712 FAILS, CLEARS 7005 AND 7018 IN 17 CYCLES
FILE: b04-7005_1ph_67n712-2013WP-DSM-NS-200.out
CHNL#S 20,4: [ANGL199169 [TUFTCV3 14.400] [3]]-[ANGL156661 [DARL G1 22.000] [1
CHNL#S 17,4: [ANGL199086 [TRENTON613.800] [6]]-[ANGL156661 [DARL G1 22.000] [1
CHNL#S 16,4: [ANGL199085 [TRENTN5 13.800] [5]]-[ANGL156661 [DARL G1 22.000] [1
CHNL#S 15,4: [ANGL199061 [TMP1 STO13.800] [1]]-[ANGL156661 [DARL G1 22.000] [1
CHNL#S 13,4: [ANGL199043 [ACONIG1 20.000] [1]]-[ANGL156661 [DARL G1 22.000] [1
CHNL#S 11,4: [ANGL199001 [LINGAN1 14.400] [1]]-[ANGL156661 [DARL G1 22.000] [1
100.00
-100.0
TIME (SECONDS)
SAT, JAN 31 2009 15:40
NS ANGLE

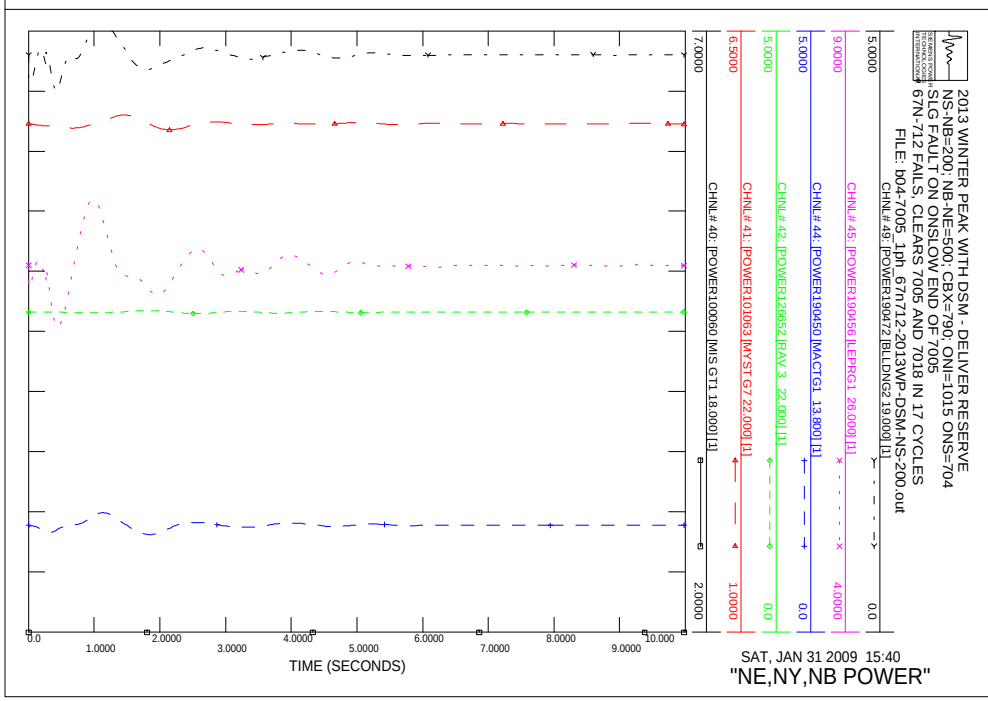
2013 WINTER PEAK WITH DSM - DELIVER RESERVE
NS-NB=200; NB-NE=500; CBX=790; ONI=1015 ONS=704
SLG FAULT ON ONSLOW END OF 7005
67N-712 FAILS, CLEARS 7005 AND 7018 IN 17 CYCLES
FILE: b04-7005_1ph_67n712-2013WP-DSM-NS-200.out
CHNL# 49: [POWER190472 [BLLDNG2 19.000] [1]
CHNL# 45: [POWER190456 [LEPRG1 26.000] [1]
CHNL# 44: [POWER190450 [MACTG1 13.800] [1]
CHNL# 42: [POWER126652 [RAV 3 22.000] [1]
CHNL# 41: [POWER101063 [MYST G7 22.000] [1]
CHNL# 40: [POWER100060 [MIS GT1 18.000] [1]
5.0000
0.0
TIME (SECONDS)
SAT, JAN 31 2009 15:40
"NE,NY,NB POWER"

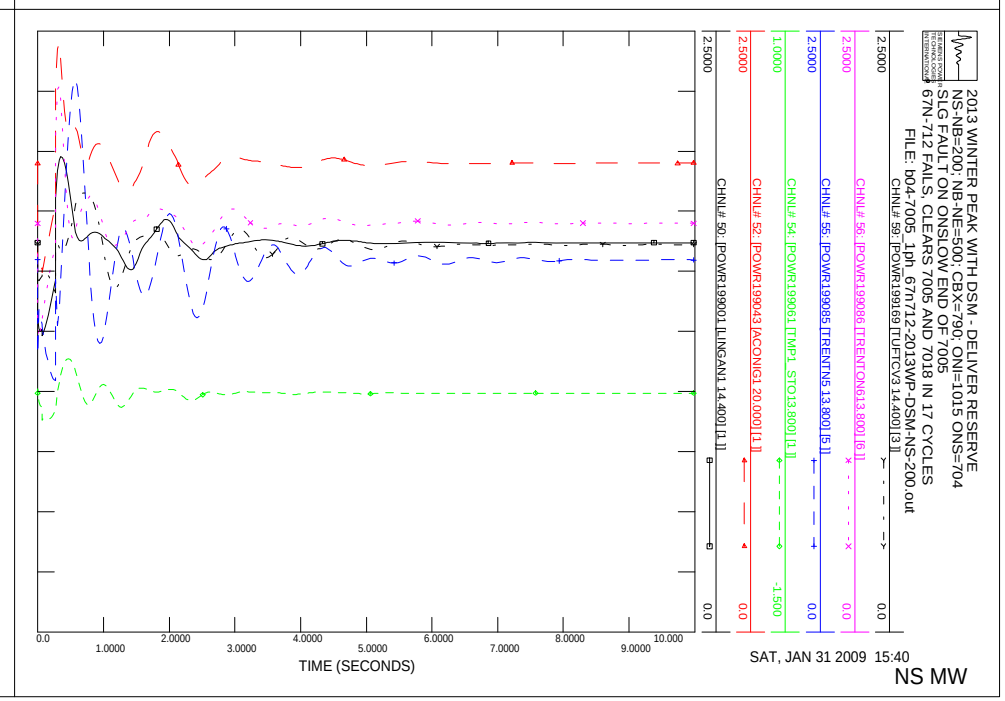
2013 WINTER PEAK WITH DSM - DELIVER RESERVE
NS-NB=200; NB-NE=500; CBX=790; ONI=1015 ONS=704
SLG FAULT ON ONSLOW END OF 7005
67N-712 FAILS, CLEARS 7005 AND 7018 IN 17 CYCLES
FILE: b04-7005_1ph_67n712-2013WP-DSM-NS-200.out
CHNL# 59: [POWR199169 [TUFTCV3 14.400] [3]]
CHNL# 56: [POWR199086 [TRENTON613.800] [6]]
CHNL# 55: [POWR199085 [TRENTN5 13.800] [5]]
CHNL# 54: [POWR199061 [TMP1 STO13.800] [1]]
CHNL# 52: [POWR199043 [ACONIG1 20.000] [1]]
CHNL# 50: [POWR199001 [LINGAN1 14.400] [1]]
2.5000
0.0
TIME (SECONDS)
SAT, JAN 31 2009 15:40
NS MW

2013 WINTER PEAK WITH DSM - DELIVER RESERVE
NS-NB=200; NB-NE=500; CBX=790; ONI=1015 ONS=704
SLG FAULT ON ONSLOW END OF 7005
67N-712 FAILS, CLEARS 7005 AND 7018 IN 17 CYCLES
FILE: b04-7005_1ph_67n712-2013WP-DSM-NS-200.out
CHNL# 119: [VARS IR141-DIGBY]
CHNL# 118: [VARS IR137-STATIA]
CHNL# 117: [VARS IR114-GLENDHU]
CHNL# 116: [VARS IR84-DALHOUSIE]
CHNL# 115: [VARS IR82_NUTTBY]
CHNL# 114: [VARS IR45_AMHERST]
TIME (SECONDS)
SAT, JAN 31 2009 15:40
NS WIND MV

2013 WINTER PEAK WITH DSM - DELIVER RESERVE
NS-NB=200; NB-NE=500; CBX=790; ONI=1015 ONS=704
SLG FAULT ON ONSLOW END OF 7005
67N-712 FAILS, CLEARS 7005 AND 7018 IN 17 CYCLES
FILE: b04-7005_1ph_67n712-2013WP-DSM-NS-200.out
CHNL# 79: [POWER IR141-DIGBY]
CHNL# 78: [POWER IR137-STATIA]
CHNL# 77: [POWER IR114-GLENDHU]
CHNL# 76: [POWER IR84-DALHOUSIE]
CHNL# 75: [POWER IR82_NUTTBY]
CHNL# 74: [POWER IR45_AMHERST]
TIME (SECONDS)
SAT, JAN 31 2009 15:40
NS WIND MW

2013 WINTER PEAK WITH DSM - DELIVER RESERVE
NS-NB=200; NB-NE=500; CBX=790; ONI=1015 ONS=704
SLG FAULT ON ONSLOW END OF 7005
67N-712 FAILS, CLEARS 7005 AND 7018 IN 17 CYCLES
FILE: b04-7005_1ph_67n712-2013WP-DSM-NS-200.out
CHNL# 133: [VOLT199125 [ONSLOW 345.00]]
CHNL# 132: [VOLT199120 [HOPEWELL 345.00]]
CHNL# 131: [VOLT199045 [WOODBINE345.00]]
CHNL# 130: [VOLT190320 [SALBRY 345.00]]
CHNL# 128: [VOLT190004 [KESWICK 345.00]]
CHNL# 127: [VOLT 70002 [ORRINGTN345.00]]
TIME (SECONDS)
SAT, JAN 31 2009 15:40
"345KV VOLTAGE"

2013 WINTER PEAK WITH DSM - DELIVER RESERVE
NS-NB=200; NB-NE=500; CBX=790; ONI=1015 ONS=704
SLG FAULT ON ONSLOW END OF 7005
67N-712 FAILS, CLEARS 7005 AND 7018 IN 17 CYCLES
FILE: b04-7005_1ph_67n712-2013WP-DSM-NS-200.out
CHNL# 125: 60*(1+[FREQ199125 [ONSLOW 345.00]])
CHNL# 124: 60*(1+[FREQ199120 [HOPEWELL 345.00]])
CHNL# 123: 60*(1+[FREQ199045 [WOODBINE345.00]])
CHNL# 122: 60*(1+[FREQ190320 [SALBRY 345.00]])
CHNL# 121: 60*(1+[FREQ190197 [C.COVE 345.00]])
CHNL# 120: 60*(1+[FREQ 70002 [ORRINGTN345.00]])
TIME (SECONDS)
SAT, JAN 31 2009 15:40
FREQUENCY HZ

2013 WINTER PEAK WITH DSM - DELIVER RESERVE
NS-NB=200; NB-NE=500; CBX=790; ONI=1015 ONS=704
SLG FAULT ON ONSLOW END OF 7005
67N-712 FAILS, CLEARS 7005 AND 7018 IN 17 CYCLES
FILE: b04-7005_1ph_67n712-2013WP-DSM-NS-200.out
CHNL# 146: [VOLT199280 [TUSKET A138.00]]
CHNL# 145: [VOLT199193 [HHWAS 138.00]]
CHNL# 144: [VOLT199165 [TUFTCOVE138.00]]
CHNL# 143: [VOLT199138: [SPRNGHILL138.00]]
CHNL# 142: [VOLT199090 [SON-TREN138.00]]
CHNL# 141: [VOLT199051 [HASTINGS138.00]]
1.2000
0.70000
0.0
1.0000
2.0000
3.0000
4.0000
5.0000
6.0000
7.0000
8.0000
9.0000
10.000
TIME (SECONDS)
SAT, JAN 31 2009 15:40
138KV BUS VOLTS

2013 WINTER PEAK WITH DSM - DELIVER RESERVE
NS-NB=200; NB-NE=500; CBX=790; ONI=1015 ONS=704
SLG FAULT ON ONSLOW END OF 7005
67N-712 FAILS, CLEARS 7005 AND 7018 IN 17 CYCLES
FILE: b04-7005_1ph_67n712-2013WP-DSM-NS-200.out
CHNL# 140: [VOLT199240 [BWATER A230.00]]
CHNL# 139: [VOLT199200 [BRUSHY 230.00]]
CHNL# 138: [VOLT199130 [ONSLOW 230.00]]
CHNL# 137: [VOLT199050 [HASTINGS230.00]]
CHNL# 136: [VOLT199044 [PT.ACONI230.00]]
CHNL# 135: [VOLT199000 [LINGAN 230.00]]
1.2000
0.70000
0.0
1.0000
2.0000
3.0000
4.0000
5.0000
6.0000
7.0000
8.0000
9.0000
10.000
TIME (SECONDS)
SAT, JAN 31 2009 15:40
230KV BUS VOLTS

2013 WINTER PEAK WITH DSM - DELIVER RESERVE
NS-NB=200; NB-NE=500; CBX=790; ONI=1015 ONS=704
SLG FAULT ON ONSLOW END OF 7005
67N-712 FAILS, CLEARS 7005 AND 7018 IN 17 CYCLES
FILE: b04-7005_1ph_67n712-2013WP-DSM-NS-200.out
CHNL# 217: [L6513MW]
CHNL# 215: [L6503MW]
CHNL# 197: [L8003MW]
CHNL# 195: [L8004MW]
CHNL# 193: [L8001MW]
CHNL# 221: [L3001MW]
250.00
-250.0
500.00
0.0
1000.0
-1000.
0.0
1.0000
2.0000
3.0000
4.0000
5.0000
6.0000
7.0000
8.0000
9.0000
10.000
TIME (SECONDS)
SAT, JAN 31 2009 15:40
LINE FLOW MW

2013 WINTER PEAK WITH DSM - DELIVER RESERVE
NS-NB=200; NB-NE=500; CBX=790; ONI=1015 ONS=704
SLG FAULT ON ONSLOW END OF 7005
67N-712 FAILS, CLEARS 7005 AND 7018 IN 17 CYCLES
FILE: b04-7005_1ph_67n712-2013WP-DSM-NS-200.out
CHNL# 154: [IR141-DIGBYH69.0 VOLTS]
CHNL# 153: [IR137-STATIG25.0 VOLTS]
CHNL# 152: [IR114-GLENDH138.0 VOLTS]
CHNL# 151: [IR84-DALHOHV230.0 VOLTS]
CHNL# 150: [IR82_NUTBHV69.0 VOLTS]
CHNL# 149: [IR45_AMHERTP138.0 VOLTS]
1.2000
0.70000
0.0
1.0000
2.0000
3.0000
4.0000
5.0000
6.0000
7.0000
8.0000
9.0000
10.000
TIME (SECONDS)
SAT, JAN 31 2009 15:40
WIND BUS VOLTS

2013 WINTER PEAK WITH DSM - DELIVER RESERVE
NS-NB=200; NB-NE=500; CBX=790; ONI=1015 ONS=704
SLG FAULT ON ONSLOW END OF 7005
67N-712 FAILS, CLEARS 7005 AND 7018 IN 17 CYCLES; SPS TRIPS
FILE: b04s-7005_1ph_67n712-2013WP-DSM-NS-200.out
TIME (SECONDS)
SAT, JAN 31 2009 15:40
NS ANGLE

2013 WINTER PEAK WITH DSM - DELIVER RESERVE
NS-NB=200; NB-NE=500; CBX=790; ONI=1015 ONS=704
SLG FAULT ON ONSLOW END OF 7005
67N-712 FAILS, CLEARS 7005 AND 7018 IN 17 CYCLES; SPS TRIPS
FILE: b04s-7005_1ph_67n712-2013WP-DSM-NS-200.out
TIME (SECONDS)
SAT, JAN 31 2009 15:40
"NE,NY,NB ANGLE"

2013 WINTER PEAK WITH DSM - DELIVER RESERVE
NS-NB=200; NB-NE=500; CBX=790; ONI=1015 ONS=704
SLG FAULT ON ONSLOW END OF 7005
67N-712 FAILS, CLEARS 7005 AND 7018 IN 17 CYCLES; SPS TRIPS
FILE: b04s-7005_1ph_67n712-2013WP-DSM-NS-200.out
TIME (SECONDS)
SAT, JAN 31 2009 15:40
NS MW

2013 WINTER PEAK WITH DSM - DELIVER RESERVE
NS-NB=200; NB-NE=500; CBX=790; ONI=1015 ONS=704
SLG FAULT ON ONSLOW END OF 7005
67N-712 FAILS, CLEARS 7005 AND 7018 IN 17 CYCLES; SPS TRIPS
FILE: b04s-7005_1ph_67n712-2013WP-DSM-NS-200.out
TIME (SECONDS)
SAT, JAN 31 2009 15:40
"NE,NY,NB POWER"

2013 WINTER PEAK WITH DSM - DELIVER RESERVE
NS-NB=200; NB-NE=500; CBX=790; ONI=1015 ONS=704
SLG FAULT ON ONSLOW END OF 7005
67N-712 FAILS, CLEARS 7005 AND 7018 IN 17 CYCLES; SPS TRIPS
FILE: b04s-7005_1ph_67n712-2013WP-DSM-NS-200.out
CHNL# 119: [VARS IR141-DIGBY]
CHNL# 118: [VARS IR137-STATIA]
CHNL# 117: [VARS IR114-GLENDHU]
CHNL# 116: [VARS IR84-DALHOUSIE]
CHNL# 115: [VARS IR82_NUTTBY]
CHNL# 114: [VARS IR45_AMHERST]
TIME (SECONDS)
SAT, JAN 31 2009 15:40
NS WIND MV

2013 WINTER PEAK WITH DSM - DELIVER RESERVE
NS-NB=200; NB-NE=500; CBX=790; ONI=1015 ONS=704
SLG FAULT ON ONSLOW END OF 7005
67N-712 FAILS, CLEARS 7005 AND 7018 IN 17 CYCLES; SPS TRIPS
FILE: b04s-7005_1ph_67n712-2013WP-DSM-NS-200.out
CHNL# 79: [POWER IR141-DIGBY]
CHNL# 78: [POWER IR137-STATIA]
CHNL# 77: [POWER IR114-GLENDHU]
CHNL# 76: [POWER IR84-DALHOUSIE]
CHNL# 75: [POWER IR82_NUTTBY]
CHNL# 74: [POWER IR45_AMHERST]
TIME (SECONDS)
SAT, JAN 31 2009 15:40
NS WIND MW

2013 WINTER PEAK WITH DSM - DELIVER RESERVE
NS-NB=200; NB-NE=500; CBX=790; ONI=1015 ONS=704
SLG FAULT ON ONSLOW END OF 7005
67N-712 FAILS, CLEARS 7005 AND 7018 IN 17 CYCLES; SPS TRIPS
FILE: b04s-7005_1ph_67n712-2013WP-DSM-NS-200.out
CHNL# 133: [VOLT199125 [ONSLOW 345.00]]
CHNL# 132: [VOLT199120 [HOPEWELL 345.00]]
CHNL# 131: [VOLT199045 [WOODBINE345.00]]
CHNL# 130: [VOLT190320 [SALBRY 345.00]]
CHNL# 128: [VOLT190004 [KESWICK 345.00]]
CHNL# 127: [VOLT 70002 [ORRINGTN345.00]]
TIME (SECONDS)
SAT, JAN 31 2009 15:40
"345KV VOLTAGE"

2013 WINTER PEAK WITH DSM - DELIVER RESERVE
NS-NB=200; NB-NE=500; CBX=790; ONI=1015 ONS=704
SLG FAULT ON ONSLOW END OF 7005
67N-712 FAILS, CLEARS 7005 AND 7018 IN 17 CYCLES; SPS TRIPS
FILE: b04s-7005_1ph_67n712-2013WP-DSM-NS-200.out
CHNL# 125: 60*(1+[FREQ199125 [ONSLOW 345.00]])
CHNL# 124: 60*(1+[FREQ199120 [HOPEWELL 345.00]])
CHNL# 123: 60*(1+[FREQ199045 [WOODBINE345.00]])
CHNL# 122: 60*(1+[FREQ190320 [SALBRY 345.00]])
CHNL# 121: 60*(1+[FREQ190197 [C.COVE 345.00]])
CHNL# 120: 60*(1+[FREQ 70002 [ORRINGTN345.00]])
TIME (SECONDS)
SAT, JAN 31 2009 15:40
FREQUENCY HZ

2013 WINTER PEAK WITH DSM - DELIVER RESERVE
NS-NB=200; NB-NE=500; CBX=790; ONI=1015 ONS=704
SLG FAULT ON ONSLOW END OF 7005
67N-712 FAILS, CLEARS 7005 AND 7018 IN 17 CYCLES; SPS TRIPS
FILE: b04s-7005_1ph_67n712-2013WP-DSM-NS-200.out
CHNL# 146: [VOLT199280 [TUSKET A138.00]]
CHNL# 145: [VOLT199193 [HHWAS 138.00]]
CHNL# 144: [VOLT199165 [TUFTCOVE138.00]]
CHNL# 143: [VOLT199138 [SPRNGHILL138.00]]
CHNL# 142: [VOLT199090 [SON-TREN138.00]]
CHNL# 141: [VOLT199051 [HASTINGS138.00]]
1.2000
0.70000
0.0
1.0000
2.0000
3.0000
4.0000
5.0000
6.0000
7.0000
8.0000
9.0000
10.000
TIME (SECONDS)
SAT, JAN 31 2009 15:40
138KV BUS VOLTS

2013 WINTER PEAK WITH DSM - DELIVER RESERVE
NS-NB=200; NB-NE=500; CBX=790; ONI=1015 ONS=704
SLG FAULT ON ONSLOW END OF 7005
67N-712 FAILS, CLEARS 7005 AND 7018 IN 17 CYCLES; SPS TRIPS
FILE: b04s-7005_1ph_67n712-2013WP-DSM-NS-200.out
CHNL# 140: [VOLT199240 [BWATER A230.00]]
CHNL# 139: [VOLT199200 [BRUSHY 230.00]]
CHNL# 138: [VOLT199130 [ONSLOW 230.00]]
CHNL# 137: [VOLT199050 [HASTINGS230.00]]
CHNL# 136: [VOLT199044 [PT.ACONI230.00]]
CHNL# 135: [VOLT199000 [LINGAN 230.00]]
1.2000
0.70000
0.0
1.0000
2.0000
3.0000
4.0000
5.0000
6.0000
7.0000
8.0000
9.0000
10.000
TIME (SECONDS)
SAT, JAN 31 2009 15:40
230KV BUS VOLTS

2013 WINTER PEAK WITH DSM - DELIVER RESERVE
NS-NB=200; NB-NE=500; CBX=790; ONI=1015 ONS=704
SLG FAULT ON ONSLOW END OF 7005
67N-712 FAILS, CLEARS 7005 AND 7018 IN 17 CYCLES; SPS TRIPS
FILE: b04s-7005_1ph_67n712-2013WP-DSM-NS-200.out
CHNL# 217: [L6533MW]
CHNL# 215: [L6503MW]
CHNL# 197: [L8003MW]
CHNL# 195: [L8004MW]
CHNL# 193: [L8001MW]
CHNL# 221: [L3001MW]
250.00
-250.0
500.00
0.0
1000.0
-1000.
TIME (SECONDS)
SAT, JAN 31 2009 15:40
LINE FLOW MW

2013 WINTER PEAK WITH DSM - DELIVER RESERVE
NS-NB=200; NB-NE=500; CBX=790; ONI=1015 ONS=704
SLG FAULT ON ONSLOW END OF 7005
67N-712 FAILS, CLEARS 7005 AND 7018 IN 17 CYCLES; SPS TRIPS
FILE: b04s-7005_1ph_67n712-2013WP-DSM-NS-200.out
CHNL# 154: [IR141-DIGBYH69.0 VOLTS]
CHNL# 153: [IR137-STATIG25.0 VOLTS]
CHNL# 152: [IR114-GLENDH138.0 VOLTS]
CHNL# 151: [IR84-DALHOHV230.0 VOLTS]
CHNL# 150: [IR82_NUTBHV69.0 VOLTS]
CHNL# 149: [IR45_AMHERTP138.0 VOLTS]
1.2000
0.70000
0.0
1.0000
2.0000
3.0000
4.0000
5.0000
6.0000
7.0000
8.0000
9.0000
10.000
TIME (SECONDS)
SAT, JAN 31 2009 15:40
WIND BUS VOLTS

2013 WINTER PEAK WITH DSM - DELIVER RESERVE
NS-NB=200; NB-NE=500; CBX=790; ONI=1015 ONS=704
SLG FAULT ON ONSLOW END OF 8003
67N-812 FAILS, CLEARS 8003 AND 8002; SPS TRIPS 1 LINGAN UNIT
FILE: b06s-8003_1ph_67n812-2013WP-DSM-NS-200.out
CHNL#S 20,4: [ANGL199169 [TUFTCV3 14.400] [3] [ANGL156661 [DARL G1 22.000] [1]
CHNL#S 17,4: [ANGL199086 [TRENTON613.800] [6] [ANGL156661 [DARL G1 22.000] [1]
CHNL#S 16,4: [ANGL199085 [TRENTN5 13.800] [5] [ANGL156661 [DARL G1 22.000] [1]
CHNL#S 15,4: [ANGL199061 [TMP1 STO13.800] [1] [ANGL156661 [DARL G1 22.000] [1]
CHNL#S 13,4: [ANGL199043 [ACONIG1 20.000] [1] [ANGL156661 [DARL G1 22.000] [1]
CHNL#S 11,4: [ANGL199001 [LINGAN1 14.400] [1] [ANGL156661 [DARL G1 22.000] [1]
100.00
-100.0
0.0
1.0000
2.0000
3.0000
4.0000
5.0000
6.0000
7.0000
8.0000
9.0000
10.000
TIME (SECONDS)
SAT, JAN 31 2009 15:40
NS ANGLE

2013 WINTER PEAK WITH DSM - DELIVER RESERVE
NS-NB=200; NB-NE=500; CBX=790; ONI=1015 ONS=704
SLG FAULT ON ONSLOW END OF 8003
67N-812 FAILS, CLEARS 8003 AND 8002; SPS TRIPS 1 LINGAN UNIT
FILE: b06s-8003_1ph_67n812-2013WP-DSM-NS-200.out
CHNL#S 10,4: [ANGL190472 [BLLDNG2 19.000] [1] [ANGL156661 [DARL G1 22.000] [1]
CHNL#S 6,4: [ANGL190456 [LEPRG1 26.000] [1] [ANGL156661 [DARL G1 22.000] [1]
CHNL#S 5,4: [ANGL190450 [MACTG1 13.800] [1] [ANGL156661 [DARL G1 22.000] [1]
CHNL#S 3,4: [ANGL126652 [RAV 3 22.000] [1] [ANGL156661 [DARL G1 22.000] [1]
CHNL#S 2,4: [ANGL101063 [MYST G7 22.000] [1] [ANGL156661 [DARL G1 22.000] [1]
CHNL#S 1,4: [ANGL100060 [MIS GT1 18.000] [1] [ANGL156661 [DARL G1 22.000] [1]
100.00
-100.0
0.0
1.0000
2.0000
3.0000
4.0000
5.0000
6.0000
7.0000
8.0000
9.0000
10.000
TIME (SECONDS)
SAT, JAN 31 2009 15:40
"NE,NY,NB ANGLE"

2013 WINTER PEAK WITH DSM - DELIVER RESERVE
NS-NB=200; NB-NE=500; CBX=790; ONI=1015 ONS=704
SLG FAULT ON ONSLOW END OF 8003
67N-812 FAILS, CLEARS 8003 AND 8002; SPS TRIPS 1 LINGAN UNIT
FILE: b06s-8003_1ph_67n812-2013WP-DSM-NS-200.out
CHNL# 59: [POWR199169 [TUFTCV3 14.400] [3]
CHNL# 56: [POWR199086 [TRENTON613.800] [6]
CHNL# 55: [POWR199085 [TRENTN5 13.800] [5]
CHNL# 54: [POWR199061 [TMP1 STO13.800] [1]
CHNL# 52: [POWR199043 [ACONIG1 20.000] [1]
CHNL# 50: [POWR199001 [LINGAN1 14.400] [1]
2.5000
0.0
-1.500
1.0000
2.0000
3.0000
4.0000
5.0000
6.0000
7.0000
8.0000
9.0000
10.000
TIME (SECONDS)
SAT, JAN 31 2009 15:40
NS MW

2013 WINTER PEAK WITH DSM - DELIVER RESERVE
NS-NB=200; NB-NE=500; CBX=790; ONI=1015 ONS=704
SLG FAULT ON ONSLOW END OF 8003
67N-812 FAILS, CLEARS 8003 AND 8002; SPS TRIPS 1 LINGAN UNIT
FILE: b06s-8003_1ph_67n812-2013WP-DSM-NS-200.out
CHNL# 49: [POWER190472 [BLLDNG2 19.000] [1]
CHNL# 45: [POWER190456 [LEPRG1 26.000] [1]
CHNL# 44: [POWER190450 [MACTG1 13.800] [1]
CHNL# 42: [POWER126652 [RAV 3 22.000] [1]
CHNL# 41: [POWER101063 [MYST G7 22.000] [1]
CHNL# 40: [POWER100060 [MIS GT1 18.000] [1]
5.0000
0.0
4.0000
1.0000
2.0000
3.0000
4.0000
5.0000
6.0000
7.0000
8.0000
9.0000
10.000
TIME (SECONDS)
SAT, JAN 31 2009 15:40
"NE,NY,NB POWER"

2013 WINTER PEAK WITH DSM - DELIVER RESERVE
NS-NB=200; NB-NE=500; CBX=790; ONI=1015 ONS=704
SLG FAULT ON ONSLOW END OF 8003
67N-812 FAILS, CLEARS 8003 AND 8002; SPS TRIPS 1 LINGAN UNIT
FILE: b06s-8003_1ph_67n812-2013WP-DSM-NS-200.out
CHNL# 119: [VARS IR141-DIGBY]
CHNL# 118: [VARS IR137-STATIA]
CHNL# 117: [VARS IR114-GLENDHU]
CHNL# 116: [VARS IR84-DALHOUSIE]
CHNL# 115: [VARS IR82_NUTTBY]
CHNL# 114: [VARS IR45_AMHERST]
0.50000
-0.5000
0.0
1.0000
2.0000
3.0000
4.0000
5.0000
6.0000
7.0000
8.0000
9.0000
10.000
TIME (SECONDS)
SAT, JAN 31 2009 15:40
NS WIND MV

2013 WINTER PEAK WITH DSM - DELIVER RESERVE
NS-NB=200; NB-NE=500; CBX=790; ONI=1015 ONS=704
SLG FAULT ON ONSLOW END OF 8003
67N-812 FAILS, CLEARS 8003 AND 8002; SPS TRIPS 1 LINGAN UNIT
FILE: b06s-8003_1ph_67n812-2013WP-DSM-NS-200.out
CHNL# 79: [POWER IR141-DIGBY]
CHNL# 78: [POWER IR137-STATIA]
CHNL# 77: [POWER IR114-GLENDHU]
CHNL# 76: [POWER IR84-DALHOUSIE]
CHNL# 75: [POWER IR82_NUTTBY]
CHNL# 74: [POWER IR45_AMHERST]
1.0000
0.0
0.0
1.0000
2.0000
3.0000
4.0000
5.0000
6.0000
7.0000
8.0000
9.0000
10.000
TIME (SECONDS)
SAT, JAN 31 2009 15:40
NS WIND MW

2013 WINTER PEAK WITH DSM - DELIVER RESERVE
NS-NB=200; NB-NE=500; CBX=790; ONI=1015 ONS=704
SLG FAULT ON ONSLOW END OF 8003
67N-812 FAILS, CLEARS 8003 AND 8002; SPS TRIPS 1 LINGAN UNIT
FILE: b06s-8003_1ph_67n812-2013WP-DSM-NS-200.out
CHNL# 133: [VOLT199125 [ONSLOW 345.00]]
CHNL# 132: [VOLT199120 [HOPEWELL 345.00]]
CHNL# 131: [VOLT199045 [WOODBINE345.00]]
CHNL# 130: [VOLT190320 [SALBRY 345.00]]
CHNL# 128: [VOLT190004 [KESWICK 345.00]]
CHNL# 127: [VOLT 70002 [ORRINGTN345.00]]
1.1000
0.90000
0.0
1.0000
2.0000
3.0000
4.0000
5.0000
6.0000
7.0000
8.0000
9.0000
10.000
TIME (SECONDS)
SAT, JAN 31 2009 15:40
"345KV VOLTAGE"

2013 WINTER PEAK WITH DSM - DELIVER RESERVE
NS-NB=200; NB-NE=500; CBX=790; ONI=1015 ONS=704
SLG FAULT ON ONSLOW END OF 8003
67N-812 FAILS, CLEARS 8003 AND 8002; SPS TRIPS 1 LINGAN UNIT
FILE: b06s-8003_1ph_67n812-2013WP-DSM-NS-200.out
CHNL# 125: 60*(1+[FREQ199125 [ONSLOW 345.00]])
CHNL# 124: 60*(1+[FREQ199120 [HOPEWELL 345.00]])
CHNL# 123: 60*(1+[FREQ199045 [WOODBINE345.00]])
CHNL# 122: 60*(1+[FREQ190320 [SALBRY 345.00]])
CHNL# 121: 60*(1+[FREQ190197 [C.COVE 345.00]])
CHNL# 120: 60*(1+[FREQ 70002 [ORRINGTN345.00]])
60.500
59.500
0.0
1.0000
2.0000
3.0000
4.0000
5.0000
6.0000
7.0000
8.0000
9.0000
10.000
TIME (SECONDS)
SAT, JAN 31 2009 15:40
FREQUENCY HZ

2013 WINTER PEAK WITH DSM - DELIVER RESERVE
NS-NB=200; NB-NE=500; CBX=790; ONI=1015 ONS=704
SLG FAULT ON ONSLOW END OF 8003
67N-812 FAILS, CLEARS 8003 AND 8002; SPS TRIPS 1 LINGAN UNIT
FILE: b06s-8003_1ph_67n812-2013WP-DSM-NS-200.out
CHNL# 146: [VOLT199280 [TUSKET A138.00]]
CHNL# 145: [VOLT199193 [HHWAS 138.00]]
CHNL# 144: [VOLT199165 [TUFTCOVE138.00]]
CHNL# 143: [VOLT199138 [SPRNGHILL138.00]]
CHNL# 142: [VOLT199090 [SON-TREN138.00]]
CHNL# 141: [VOLT199051 [HASTINGS138.00]]
1.2000
0.70000
0.0
1.0000
2.0000
3.0000
4.0000
5.0000
6.0000
7.0000
8.0000
9.0000
10.000
TIME (SECONDS)
SAT, JAN 31 2009 15:40
138KV BUS VOLTS

2013 WINTER PEAK WITH DSM - DELIVER RESERVE
NS-NB=200; NB-NE=500; CBX=790; ONI=1015 ONS=704
SLG FAULT ON ONSLOW END OF 8003
67N-812 FAILS, CLEARS 8003 AND 8002; SPS TRIPS 1 LINGAN UNIT
FILE: b06s-8003_1ph_67n812-2013WP-DSM-NS-200.out
CHNL# 140: [VOLT199240 [BWATER A230.00]]
CHNL# 139: [VOLT199200 [BRUSHY 230.00]]
CHNL# 138: [VOLT199130 [ONSLOW 230.00]]
CHNL# 137: [VOLT199050 [HASTINGS230.00]]
CHNL# 136: [VOLT199044 [PT.ACONI230.00]]
CHNL# 135: [VOLT199000 [LINGAN 230.00]]
1.2000
0.70000
0.0
1.0000
2.0000
3.0000
4.0000
5.0000
6.0000
7.0000
8.0000
9.0000
10.000
TIME (SECONDS)
SAT, JAN 31 2009 15:40
230KV BUS VOLTS

2013 WINTER PEAK WITH DSM - DELIVER RESERVE
NS-NB=200; NB-NE=500; CBX=790; ONI=1015 ONS=704
SLG FAULT ON ONSLOW END OF 8003
67N-812 FAILS, CLEARS 8003 AND 8002; SPS TRIPS 1 LINGAN UNIT
FILE: b06s-8003_1ph_67n812-2013WP-DSM-NS-200.out
CHNL# 217: [L6533MW]
CHNL# 215: [L6503MW]
CHNL# 197: [L8003MW]
CHNL# 195: [L8004MW]
CHNL# 193: [L8001MW]
CHNL# 221: [L3001MW]
250.00
-250.0
500.00
0.0
1000.0
-1000.
TIME (SECONDS)
SAT, JAN 31 2009 15:40
LINE FLOW MW

2013 WINTER PEAK WITH DSM - DELIVER RESERVE
NS-NB=200; NB-NE=500; CBX=790; ONI=1015 ONS=704
SLG FAULT ON ONSLOW END OF 8003
67N-812 FAILS, CLEARS 8003 AND 8002; SPS TRIPS 1 LINGAN UNIT
FILE: b06s-8003_1ph_67n812-2013WP-DSM-NS-200.out
CHNL# 154: [IR141-DIGBYH69.0 VOLTS]
CHNL# 153: [IR137-STATIG25.0 VOLTS]
CHNL# 152: [IR114-GLENDH138.0 VOLTS]
CHNL# 151: [IR84-DALHOHV230.0 VOLTS]
CHNL# 150: [IR82 NUTBHV69.0 VOLTS]
CHNL# 149: [IR45 AMHERTP138.0 VOLTS]
1.2000
0.70000
0.0
1.0000
2.0000
3.0000
4.0000
5.0000
6.0000
7.0000
8.0000
9.0000
10.000
TIME (SECONDS)
SAT, JAN 31 2009 15:40
WIND BUS VOLTS

2013 WINTER PEAK WITH DSM - DELIVER RESERVE
NS-NB=200; NB-NE=500; CBX=790; ONI=1015 ONS=704
1 PHASE FAULT ON L8004 AT HOPEWELL BREAKER 79N-810 FAILS
BBU TRIPS 8003 IN 15 CYCLES: SPS DROPS LINGAN UNIT 2
FILE: b07s-pg_8004_79n_bbu-2013WP-DSM-NS-200.out
CHNL# 20: [ANGL199169 [TUFTCV3 14.400] [3]] [ANGL156661 [DARL G1 22.000] [1]
CHNL# 17: [ANGL199086 [TRENTON613.800] [6]] [ANGL156661 [DARL G1 22.000] [1]
CHNL# 16: [ANGL199085 [TRENTN5 13.800] [5]] [ANGL156661 [DARL G1 22.000] [1]
CHNL# 15: [ANGL199061 [TMP1 STO13.800] [1]] [ANGL156661 [DARL G1 22.000] [1]
CHNL# 13: [ANGL199043 [ACONIG1 20.000] [1]] [ANGL156661 [DARL G1 22.000] [1]
CHNL# 11: [ANGL199001 [LINGAN1 14.400] [1]] [ANGL156661 [DARL G1 22.000] [1]
100.00
-100.0
0.0
1.0000
2.0000
3.0000
4.0000
5.0000
6.0000
7.0000
8.0000
9.0000
10.000
TIME (SECONDS)
SAT, JAN 31 2009 15:40
NS ANGLE

2013 WINTER PEAK WITH DSM - DELIVER RESERVE
NS-NB=200; NB-NE=500; CBX=790; ONI=1015 ONS=704
1 PHASE FAULT ON L8004 AT HOPEWELL BREAKER 79N-810 FAILS
BBU TRIPS 8003 IN 15 CYCLES: SPS DROPS LINGAN UNIT 2
FILE: b07s-pg_8004_79n_bbu-2013WP-DSM-NS-200.out
CHNL# 10: [ANGL190472 [BLLDNG2 19.000] [1]] [ANGL156661 [DARL G1 22.000] [1]
CHNL# 6: [ANGL190456 [LEPRG1 26.000] [1]] [ANGL156661 [DARL G1 22.000] [1]
CHNL# 5: [ANGL190450 [MACTG1 13.800] [1]] [ANGL156661 [DARL G1 22.000] [1]
CHNL# 3: [ANGL126652 [RAV 3 22.000] [1]] [ANGL156661 [DARL G1 22.000] [1]
CHNL# 2: [ANGL101063 [MYST G7 22.000] [1]] [ANGL156661 [DARL G1 22.000] [1]
CHNL# 1: [ANGL100060 [MIS GT1 18.000] [1]] [ANGL156661 [DARL G1 22.000] [1]
100.00
-100.0
0.0
1.0000
2.0000
3.0000
4.0000
5.0000
6.0000
7.0000
8.0000
9.0000
10.000
TIME (SECONDS)
SAT, JAN 31 2009 15:40
"NE,NY,NB ANGLE"

2013 WINTER PEAK WITH DSM - DELIVER RESERVE
NS-NB=200; NB-NE=500; CBX=790; ONI=1015 ONS=704
1 PHASE FAULT ON L8004 AT HOPEWELL BREAKER 79N-810 FAILS
BBU TRIPS 8003 IN 15 CYCLES: SPS DROPS LINGAN UNIT 2
FILE: b07s-pg_8004_79n_bbu-2013WP-DSM-NS-200.out
CHNL# 59: [POWR199169 [TUFTCV3 14.400] [3]]
CHNL# 56: [POWR199086 [TRENTON613.800] [6]]
CHNL# 55: [POWR199085 [TRENTN5 13.800] [5]]
CHNL# 54: [POWR199061 [TMP1 STO13.800] [1]]
CHNL# 52: [POWR199043 [ACONIG1 20.000] [1]]
CHNL# 50: [POWR199001 [LINGAN1 14.400] [1]]
2.5000
0.0
-1.500
1.0000
2.0000
3.0000
4.0000
5.0000
6.0000
7.0000
8.0000
9.0000
10.000
TIME (SECONDS)
SAT, JAN 31 2009 15:40
NS MW

2013 WINTER PEAK WITH DSM - DELIVER RESERVE
NS-NB=200; NB-NE=500; CBX=790; ONI=1015 ONS=704
1 PHASE FAULT ON L8004 AT HOPEWELL BREAKER 79N-810 FAILS
BBU TRIPS 8003 IN 15 CYCLES: SPS DROPS LINGAN UNIT 2
FILE: b07s-pg_8004_79n_bbu-2013WP-DSM-NS-200.out
CHNL# 49: [POWER190472 [BLLDNG2 19.000] [1]]
CHNL# 45: [POWER190456 [LEPRG1 26.000] [1]]
CHNL# 44: [POWER190450 [MACTG1 13.800] [1]]
CHNL# 42: [POWER126652 [RAV 3 22.000] [1]]
CHNL# 41: [POWER101063 [MYST G7 22.000] [1]]
CHNL# 40: [POWER100060 [MIS GT1 18.000] [1]]
5.0000
9.0000
4.0000
0.0
1.0000
2.0000
3.0000
4.0000
5.0000
6.0000
7.0000
8.0000
9.0000
10.000
TIME (SECONDS)
SAT, JAN 31 2009 15:40
"NE,NY,NB POWER"

2013 WINTER PEAK WITH DSM - DELIVER RESERVE
NS-NB=200; NB-NE=500; CBX=790; ONI=1015 ONS=704
1 PHASE FAULT ON L8004 AT HOPEWELL BREAKER 79N-810 FAILS
BBU TRIPS 8003 IN 15 CYCLES: SPS DROPS LINGAN UNIT 2
FILE: b07s-pg_8004_79n_bbu-2013WP-DSM-NS-200.out
CHNL# 119: [VARS IR141-DIGBY]
CHNL# 118: [VARS IR137-STATIA]
CHNL# 117: [VARS IR114-GLENDHU]
CHNL# 116: [VARS IR84-DALHOUSIE]
CHNL# 115: [VARS IR82_NUTTBY]
CHNL# 114: [VARS IR45_AMHERST]
0.50000
-0.5000
0.0
1.0000
2.0000
3.0000
4.0000
5.0000
6.0000
7.0000
8.0000
9.0000
10.000
TIME (SECONDS)
SAT, JAN 31 2009 15:40
NS WIND MV

2013 WINTER PEAK WITH DSM - DELIVER RESERVE
NS-NB=200; NB-NE=500; CBX=790; ONI=1015 ONS=704
1 PHASE FAULT ON L8004 AT HOPEWELL BREAKER 79N-810 FAILS
BBU TRIPS 8003 IN 15 CYCLES: SPS DROPS LINGAN UNIT 2
FILE: b07s-pg_8004_79n_bbu-2013WP-DSM-NS-200.out
CHNL# 79: [POWER IR141-DIGBY]
CHNL# 78: [POWER IR137-STATIA]
CHNL# 77: [POWER IR114-GLENDHU]
CHNL# 76: [POWER IR84-DALHOUSIE]
CHNL# 75: [POWER IR82_NUTTBY]
CHNL# 74: [POWER IR45_AMHERST]
1.0000
0.0
1.0000
2.0000
3.0000
4.0000
5.0000
6.0000
7.0000
8.0000
9.0000
10.000
TIME (SECONDS)
SAT, JAN 31 2009 15:40
NS WIND MW

2013 WINTER PEAK WITH DSM - DELIVER RESERVE
NS-NB=200; NB-NE=500; CBX=790; ONI=1015 ONS=704
1 PHASE FAULT ON L8004 AT HOPEWELL BREAKER 79N-810 FAILS
BBU TRIPS 8003 IN 15 CYCLES: SPS DROPS LINGAN UNIT 2
FILE: b07s-pg_8004_79n_bbu-2013WP-DSM-NS-200.out
CHNL# 133: [VOLT199125 IONSLOW 345.00]
CHNL# 132: [VOLT199120 IHOPEWELL345.00]
CHNL# 131: [VOLT199045 IWOODBINE345.00]
CHNL# 130: [VOLT190320 ISALBRY 345.00]
CHNL# 128: [VOLT190004 IKESWICK 345.00]
CHNL# 127: [VOLT 70002 IORRINGTN345.00]
1.1000
0.90000
0.0
1.0000
2.0000
3.0000
4.0000
5.0000
6.0000
7.0000
8.0000
9.0000
10.000
TIME (SECONDS)
SAT, JAN 31 2009 15:40
"345KV VOLTAGE"

2013 WINTER PEAK WITH DSM - DELIVER RESERVE
NS-NB=200; NB-NE=500; CBX=790; ONI=1015 ONS=704
1 PHASE FAULT ON L8004 AT HOPEWELL BREAKER 79N-810 FAILS
BBU TRIPS 8003 IN 15 CYCLES: SPS DROPS LINGAN UNIT 2
FILE: b07s-pg_8004_79n_bbu-2013WP-DSM-NS-200.out
CHNL# 125: 60*(1+[FREQ199125 IONSLOW 345.00])
CHNL# 124: 60*(1+[FREQ199120 IHOPEWELL345.00])
CHNL# 123: 60*(1+[FREQ199045 IWOODBINE345.00])
CHNL# 122: 60*(1+[FREQ190320 ISALBRY 345.00])
CHNL# 121: 60*(1+[FREQ190197 IC.COVE 345.00])
CHNL# 120: 60*(1+[FREQ 70002 IORRINGTN345.00])
60.500
59.500
0.0
1.0000
2.0000
3.0000
4.0000
5.0000
6.0000
7.0000
8.0000
9.0000
10.000
TIME (SECONDS)
SAT, JAN 31 2009 15:40
FREQUENCY HZ

2013 WINTER PEAK WITH DSM - DELIVER RESERVE
NS-NB=200; NB-NE=500; CBX=790; ONI=1015 ONS=704
1 PHASE FAULT ON L8004 AT HOPEWELL BREAKER 79N-810 FAILS
BBU TRIPS 8003 IN 15 CYCLES: SPS DROPS LINGAN UNIT 2
FILE: b07s-pg_8004_79n_bbu-2013WP-DSM-NS-200.out
CHNL# 146: [VOLT199280 [TUSKET A138.00]]
CHNL# 145: [VOLT199193 [HHWAS 138.00]]
CHNL# 144: [VOLT199165 [TUFTCOVE138.00]]
CHNL# 143: [VOLT199138 [SPRNGHIL138.00]]
CHNL# 142: [VOLT199090 [50N-TREN138.00]]
CHNL# 141: [VOLT199051 [HASTINGS138.00]]
1.2000
0.70000
0.0
1.0000
2.0000
3.0000
4.0000
5.0000
6.0000
7.0000
8.0000
9.0000
10.000
TIME (SECONDS)
SAT, JAN 31 2009 15:40
138KV BUS VOLTS

2013 WINTER PEAK WITH DSM - DELIVER RESERVE
NS-NB=200; NB-NE=500; CBX=790; ONI=1015 ONS=704
1 PHASE FAULT ON L8004 AT HOPEWELL BREAKER 79N-810 FAILS
BBU TRIPS 8003 IN 15 CYCLES: SPS DROPS LINGAN UNIT 2
FILE: b07s-pg_8004_79n_bbu-2013WP-DSM-NS-200.out
CHNL# 140: [VOLT199240 [BWATER A230.00]]
CHNL# 139: [VOLT199200 [BRUSHY 230.00]]
CHNL# 138: [VOLT199130 [ONSLOW 230.00]]
CHNL# 137: [VOLT199050 [HASTINGS230.00]]
CHNL# 136: [VOLT199044 [PT.ACONI230.00]]
CHNL# 135: [VOLT199000 [LINGAN 230.00]]
1.2000
0.70000
0.0
1.0000
2.0000
3.0000
4.0000
5.0000
6.0000
7.0000
8.0000
9.0000
10.000
TIME (SECONDS)
SAT, JAN 31 2009 15:40
230KV BUS VOLTS

2013 WINTER PEAK WITH DSM - DELIVER RESERVE
NS-NB=200; NB-NE=500; CBX=790; ONI=1015 ONS=704
1 PHASE FAULT ON L8004 AT HOPEWELL BREAKER 79N-810 FAILS
BBU TRIPS 8003 IN 15 CYCLES: SPS DROPS LINGAN UNIT 2
FILE: b07s-pg_8004_79n_bbu-2013WP-DSM-NS-200.out
CHNL# 217: [L6533MW]
CHNL# 215: [L6503MW]
CHNL# 197: [L8003MW]
CHNL# 195: [L8004MW]
CHNL# 193: [L8001MW]
CHNL# 221: [L3001MW]
250.00
500.00
1000.0
0.0
-250.0
-1000.
TIME (SECONDS)
SAT, JAN 31 2009 15:40
LINE FLOW MW

2013 WINTER PEAK WITH DSM - DELIVER RESERVE
NS-NB=200; NB-NE=500; CBX=790; ONI=1015 ONS=704
1 PHASE FAULT ON L8004 AT HOPEWELL BREAKER 79N-810 FAILS
BBU TRIPS 8003 IN 15 CYCLES: SPS DROPS LINGAN UNIT 2
FILE: b07s-pg_8004_79n_bbu-2013WP-DSM-NS-200.out
CHNL# 154: [IR141-DIGBYH69.0 VOLTS]
CHNL# 153: [IR137-STATIG25.0 VOLTS]
CHNL# 152: [IR114-GLENDH138.0 VOLTS]
CHNL# 151: [IR84-DALHOHV230.0 VOLTS]
CHNL# 150: [IR82-NUTBHV69.0 VOLTS]
CHNL# 149: [IR45-AMHERTP138.0 VOLTS]
1.2000
0.70000
0.0
1.0000
2.0000
3.0000
4.0000
5.0000
6.0000
7.0000
8.0000
9.0000
10.000
TIME (SECONDS)
SAT, JAN 31 2009 15:40
WIND BUS VOLTS

2013 WINTER PEAK WITH DSM - DELIVER RESERVE
NS-NB=200; NB-NE=500; CBX=790; ONI=1015 ONS=704
1 PHASE FAULT ON L8004 AT HOPEWELL BREAKER 79N-810 FAILS
SLG FAULT ON LINGAN BUS NODE BETWEEN G3 AND G4
FILE: b08-88s_b71_1ph_88s721-2013WP-DSM-NS-200.out
CHNL# 20: [ANGL199169 [TUFTCV3 14.400] [3]] [ANGL156661 [DARL G1 22.000] [1]
CHNL# 17: [ANGL199086 [TRENTON613.800] [6]] [ANGL156661 [DARL G1 22.000] [1]
CHNL# 16: [ANGL199085 [TRENTN5 13.800] [5]] [ANGL156661 [DARL G1 22.000] [1]
CHNL# 15: [ANGL199061 [TMP1 STO13.800] [1]] [ANGL156661 [DARL G1 22.000] [1]
CHNL# 13: [ANGL199043 [ACONIG1 20.000] [1]] [ANGL156661 [DARL G1 22.000] [1]
CHNL# 11: [ANGL199001 [LINGAN1 14.400] [1]] [ANGL156661 [DARL G1 22.000] [1]
100.00
-100.0
0.0
1.0000
2.0000
3.0000
4.0000
5.0000
6.0000
7.0000
8.0000
9.0000
10.000
TIME (SECONDS)
SAT, JAN 31 2009 15:40
NS ANGLE

2013 WINTER PEAK WITH DSM - DELIVER RESERVE
NS-NB=200; NB-NE=500; CBX=790; ONI=1015 ONS=704
1 PHASE FAULT ON L8004 AT HOPEWELL BREAKER 79N-810 FAILS
SLG FAULT ON LINGAN BUS NODE BETWEEN G3 AND G4
FILE: b08-88s_b71_1ph_88s721-2013WP-DSM-NS-200.out
CHNL# 10: [ANGL190472 [BLLDNG2 19.000] [1]] [ANGL156661 [DARL G1 22.000] [1]
CHNL# 6: [ANGL190456 [LEPRG1 26.000] [1]] [ANGL156661 [DARL G1 22.000] [1]
CHNL# 5: [ANGL190450 [MACTG1 13.800] [1]] [ANGL156661 [DARL G1 22.000] [1]
CHNL# 3: [ANGL126652 [RAV 3 22.000] [1]] [ANGL156661 [DARL G1 22.000] [1]
CHNL# 2: [ANGL101063 [MYST G7 22.000] [1]] [ANGL156661 [DARL G1 22.000] [1]
CHNL# 1: [ANGL100060 [MIS GT1 18.000] [1]] [ANGL156661 [DARL G1 22.000] [1]
100.00
-100.0
0.0
1.0000
2.0000
3.0000
4.0000
5.0000
6.0000
7.0000
8.0000
9.0000
10.000
TIME (SECONDS)
SAT, JAN 31 2009 15:40
"NE,NY,NB ANGLE"

2013 WINTER PEAK WITH DSM - DELIVER RESERVE
NS-NB=200; NB-NE=500; CBX=790; ONI=1015 ONS=704
1 PHASE FAULT ON L8004 AT HOPEWELL BREAKER 79N-810 FAILS
SLG FAULT ON LINGAN BUS NODE BETWEEN G3 AND G4
FILE: b08-88s_b71_1ph_88s721-2013WP-DSM-NS-200.out
CHNL# 59: [POWR199169 [TUFTCV3 14.400] [3]]
CHNL# 56: [POWR199086 [TRENTON613.800] [6]]
CHNL# 55: [POWR199085 [TRENTN5 13.800] [5]]
CHNL# 54: [POWR199061 [TMP1 STO13.800] [1]]
CHNL# 52: [POWR199043 [ACONIG1 20.000] [1]]
CHNL# 50: [POWR199001 [LINGAN1 14.400] [1]]
2.5000
1.0000
0.0
-1.500
0.0
1.0000
2.0000
3.0000
4.0000
5.0000
6.0000
7.0000
8.0000
9.0000
10.000
TIME (SECONDS)
SAT, JAN 31 2009 15:40
NS MW

2013 WINTER PEAK WITH DSM - DELIVER RESERVE
NS-NB=200; NB-NE=500; CBX=790; ONI=1015 ONS=704
1 PHASE FAULT ON L8004 AT HOPEWELL BREAKER 79N-810 FAILS
SLG FAULT ON LINGAN BUS NODE BETWEEN G3 AND G4
FILE: b08-88s_b71_1ph_88s721-2013WP-DSM-NS-200.out
CHNL# 49: [POWER190472 [BLLDNG2 19.000] [1]]
CHNL# 45: [POWER190456 [LEPRG1 26.000] [1]]
CHNL# 44: [POWER190450 [MACTG1 13.800] [1]]
CHNL# 42: [POWER126652 [RAV 3 22.000] [1]]
CHNL# 41: [POWER101063 [MYST G7 22.000] [1]]
CHNL# 40: [POWER100060 [MIS GT1 18.000] [1]]
5.0000
9.0000
5.0000
5.0000
6.5000
7.0000
0.0
4.0000
0.0
0.0
1.0000
2.0000
0.0
1.0000
2.0000
3.0000
4.0000
5.0000
6.0000
7.0000
8.0000
9.0000
10.000
TIME (SECONDS)
SAT, JAN 31 2009 15:40
"NE,NY,NB POWER"

2013 WINTER PEAK WITH DSM - DELIVER RESERVE
NS-NB=200; NB-NE=500; CBX=790; ONI=1015 ONS=704
1 PHASE FAULT ON L8004 AT HOPEWELL BREAKER 79N-810 FAILS
SLG FAULT ON LINGAN BUS NODE BETWEEN G3 AND G4
FILE: b08-88s_b71_1ph_88s721-2013WP-DSM-NS-200.out
CHNL# 119: [VARS IR141-DIGBY]
CHNL# 118: [VARS IR137-STATIA]
CHNL# 117: [VARS IR114-GLENDHU]
CHNL# 116: [VARS IR84-DALHOUSIE]
CHNL# 115: [VARS IR82_NUTTBY]
CHNL# 114: [VARS IR45_AMHERST]
TIME (SECONDS)
SAT, JAN 31 2009 15:40
NS WIND MV

2013 WINTER PEAK WITH DSM - DELIVER RESERVE
NS-NB=200; NB-NE=500; CBX=790; ONI=1015 ONS=704
1 PHASE FAULT ON L8004 AT HOPEWELL BREAKER 79N-810 FAILS
SLG FAULT ON LINGAN BUS NODE BETWEEN G3 AND G4
FILE: b08-88s_b71_1ph_88s721-2013WP-DSM-NS-200.out
CHNL# 79: [POWER IR141-DIGBY]
CHNL# 78: [POWER IR137-STATIA]
CHNL# 77: [POWER IR114-GLENDHU]
CHNL# 76: [POWER IR84-DALHOUSIE]
CHNL# 75: [POWER IR82_NUTTBY]
CHNL# 74: [POWER IR45_AMHERST]
TIME (SECONDS)
SAT, JAN 31 2009 15:40
NS WIND MW

2013 WINTER PEAK WITH DSM - DELIVER RESERVE
NS-NB=200; NB-NE=500; CBX=790; ONI=1015 ONS=704
1 PHASE FAULT ON L8004 AT HOPEWELL BREAKER 79N-810 FAILS
SLG FAULT ON LINGAN BUS NODE BETWEEN G3 AND G4
FILE: b08-88s_b71_1ph_88s721-2013WP-DSM-NS-200.out
CHNL# 133: [VOLT199125 [ONSLOW 345.00]]
CHNL# 132: [VOLT199120 [HOPEWELL 345.00]]
CHNL# 131: [VOLT199045 [WOODBINE345.00]]
CHNL# 130: [VOLT190320 [SALBRY 345.00]]
CHNL# 128: [VOLT190004 [KESWICK 345.00]]
CHNL# 127: [VOLT 70002 [ORRINGTN345.00]]
TIME (SECONDS)
SAT, JAN 31 2009 15:40
"345KV VOLTAGE"

2013 WINTER PEAK WITH DSM - DELIVER RESERVE
NS-NB=200; NB-NE=500; CBX=790; ONI=1015 ONS=704
1 PHASE FAULT ON L8004 AT HOPEWELL BREAKER 79N-810 FAILS
SLG FAULT ON LINGAN BUS NODE BETWEEN G3 AND G4
FILE: b08-88s_b71_1ph_88s721-2013WP-DSM-NS-200.out
CHNL# 125: 60*(1+[FREQ199125 [ONSLOW 345.00]])
CHNL# 124: 60*(1+[FREQ199120 [HOPEWELL 345.00]])
CHNL# 123: 60*(1+[FREQ199045 [WOODBINE345.00]])
CHNL# 122: 60*(1+[FREQ190320 [SALBRY 345.00]])
CHNL# 121: 60*(1+[FREQ190197 [C.COVE 345.00]])
CHNL# 120: 60*(1+[FREQ 70002 [ORRINGTN345.00]])
TIME (SECONDS)
SAT, JAN 31 2009 15:40
FREQUENCY HZ

2013 WINTER PEAK WITH DSM - DELIVER RESERVE
NS-NB=200; NB-NE=500; CBX=790; ONI=1015 ONS=704
1 PHASE FAULT ON L8004 AT HOPEWELL BREAKER 79N-810 FAILS
SLG FAULT ON LINGAN BUS NODE BETWEEN G3 AND G4
FILE: b08-88s_b71_1ph_88s721-2013WP-DSM-NS-200.out
CHNL# 146: [VOLT199280 [TUSKET A138.00]]
CHNL# 145: [VOLT199193 [HHWAS 138.00]]
CHNL# 144: [VOLT199165 [TUFTCOVE138.00]]
CHNL# 143: [VOLT199138: [SPRNGHILL138.00]]
CHNL# 142: [VOLT199090 [SON-TREN138.00]]
CHNL# 141: [VOLT199051 [HASTINGS138.00]]
1.2000
0.70000
0.0
1.0000
2.0000
3.0000
4.0000
5.0000
6.0000
7.0000
8.0000
9.0000
10.000
TIME (SECONDS)
SAT, JAN 31 2009 15:40
138KV BUS VOLTS

2013 WINTER PEAK WITH DSM - DELIVER RESERVE
NS-NB=200; NB-NE=500; CBX=790; ONI=1015 ONS=704
1 PHASE FAULT ON L8004 AT HOPEWELL BREAKER 79N-810 FAILS
SLG FAULT ON LINGAN BUS NODE BETWEEN G3 AND G4
FILE: b08-88s_b71_1ph_88s721-2013WP-DSM-NS-200.out
CHNL# 140: [VOLT199240 [BWATER A230.00]]
CHNL# 139: [VOLT199200 [BRUSHY 230.00]]
CHNL# 138: [VOLT199130 [ONSLOW 230.00]]
CHNL# 137: [VOLT199050 [HASTINGS230.00]]
CHNL# 136: [VOLT199044 [PT.ACONI230.00]]
CHNL# 135: [VOLT199000 [LINGAN 230.00]]
1.2000
0.70000
0.0
1.0000
2.0000
3.0000
4.0000
5.0000
6.0000
7.0000
8.0000
9.0000
10.000
TIME (SECONDS)
SAT, JAN 31 2009 15:40
230KV BUS VOLTS

2013 WINTER PEAK WITH DSM - DELIVER RESERVE
NS-NB=200; NB-NE=500; CBX=790; ONI=1015 ONS=704
1 PHASE FAULT ON L8004 AT HOPEWELL BREAKER 79N-810 FAILS
SLG FAULT ON LINGAN BUS NODE BETWEEN G3 AND G4
FILE: b08-88s_b71_1ph_88s721-2013WP-DSM-NS-200.out
CHNL# 217: [L6533MW]
CHNL# 215: [L6503MW]
CHNL# 197: [L8003MW]
CHNL# 195: [L8004MW]
CHNL# 193: [L8001MW]
CHNL# 221: [L3001MW]
250.00
500.00
1000.0
0.0
-250.0
-1000.
0.0
1.0000
2.0000
3.0000
4.0000
5.0000
6.0000
7.0000
8.0000
9.0000
10.000
TIME (SECONDS)
SAT, JAN 31 2009 15:40
LINE FLOW MW

2013 WINTER PEAK WITH DSM - DELIVER RESERVE
NS-NB=200; NB-NE=500; CBX=790; ONI=1015 ONS=704
1 PHASE FAULT ON L8004 AT HOPEWELL BREAKER 79N-810 FAILS
SLG FAULT ON LINGAN BUS NODE BETWEEN G3 AND G4
FILE: b08-88s_b71_1ph_88s721-2013WP-DSM-NS-200.out
CHNL# 154: [IR141-DIGBYH69.0 VOLTS]
CHNL# 153: [IR137-STATIG25.0 VOLTS]
CHNL# 152: [IR114-GLENDH138.0 VOLTS]
CHNL# 151: [IR84-DALHOHV230.0 VOLTS]
CHNL# 150: [IR82 NUTBHV69.0 VOLTS]
CHNL# 149: [IR45 AMHERTP138.0 VOLTS]
1.2000
0.70000
0.0
1.0000
2.0000
3.0000
4.0000
5.0000
6.0000
7.0000
8.0000
9.0000
10.000
TIME (SECONDS)
SAT, JAN 31 2009 15:40
WIND BUS VOLTS

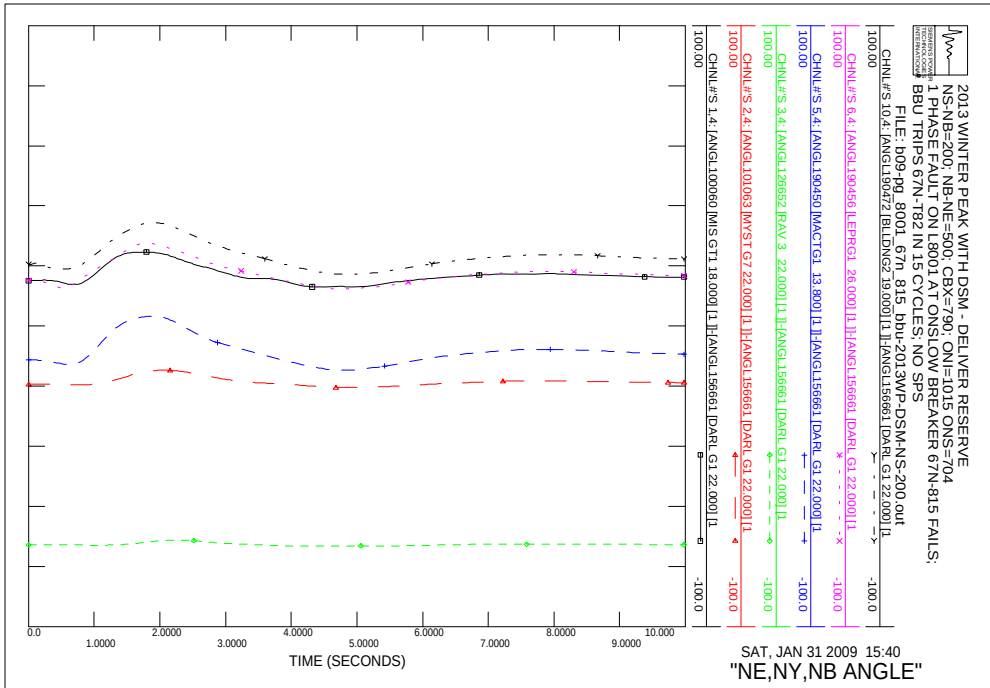
2013 WINTER PEAK WITH DSM - DELIVER RESERVE
NS-NB=200; NB-NE=500; CBX=790; ONI=1015 ONS=704
1 PHASE FAULT ON L8001 AT ONSLOW BREAKER 67N-815 FAILS;
BBU TRIPS 67N-T82 IN 15 CYCLES; NO SPS
FILE: b09-pg_8001_67n_815_bbu-2013WP-DSM-NS-200.out
CHNL#'S 10,4: [ANGL190472 [BLLDNG2 19.000] [1]]-[ANGL156661 [DARL G1 22.000] [1
CHNL#'S 6,4: [ANGL190456 [LEPRG1 26.000] [1]]-[ANGL156661 [DARL G1 22.000] [1
CHNL#'S 5,4: [ANGL190450 [MACTG1 13.800] [1]]-[ANGL156661 [DARL G1 22.000] [1
CHNL#'S 3,4: [ANGL126652 [RAV 3 22.000] [1]]-[ANGL156661 [DARL G1 22.000] [1
CHNL#'S 2,4: [ANGL101063 [MYST G7 22.000] [1]]-[ANGL156661 [DARL G1 22.000] [1
CHNL#'S 1,4: [ANGL100060 [MIS GT1 18.000] [1]]-[ANGL156661 [DARL G1 22.000] [1
100.00
-100.0
0.0
1.0000
2.0000
3.0000
4.0000
5.0000
6.0000
7.0000
8.0000
9.0000
10.000
TIME (SECONDS)
SAT, JAN 31 2009 15:40
"NE,NY,NB ANGLE"

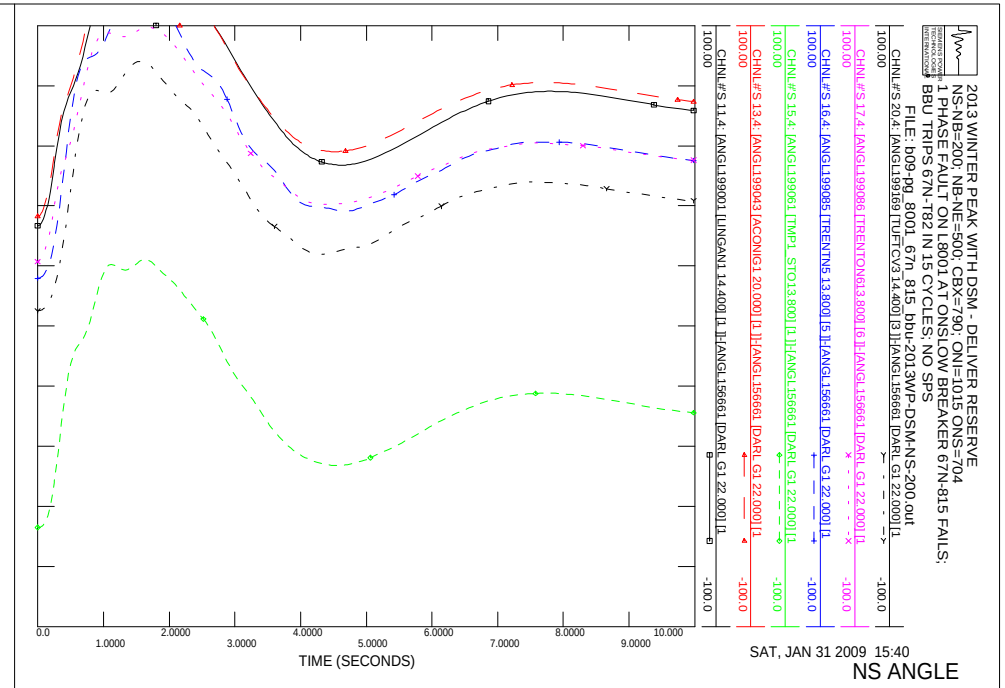
2013 WINTER PEAK WITH DSM - DELIVER RESERVE
NS-NB=200; NB-NE=500; CBX=790; ONI=1015 ONS=704
1 PHASE FAULT ON L8001 AT ONSLOW BREAKER 67N-815 FAILS;
BBU TRIPS 67N-T82 IN 15 CYCLES; NO SPS
FILE: b09-pg_8001_67n_815_bbu-2013WP-DSM-NS-200.out
CHNL#'S 20,4: [ANGL199169 [TUFTCV3 14.400] [3]]-[ANGL156661 [DARL G1 22.000] [1
CHNL#'S 17,4: [ANGL199086 [TRENTON613.800] [6]]-[ANGL156661 [DARL G1 22.000] [1
CHNL#'S 16,4: [ANGL199085 [TRENTN5 13.800] [5]]-[ANGL156661 [DARL G1 22.000] [1
CHNL#'S 15,4: [ANGL199061 [TMP1 STO13.800] [1]]-[ANGL156661 [DARL G1 22.000] [1
CHNL#'S 13,4: [ANGL199043 [ACONIG1 20.000] [1]]-[ANGL156661 [DARL G1 22.000] [1
CHNL#'S 11,4: [ANGL199001 [LINGAN1 14.400] [1]]-[ANGL156661 [DARL G1 22.000] [1
100.00
-100.0
0.0
1.0000
2.0000
3.0000
4.0000
5.0000
6.0000
7.0000
8.0000
9.0000
10.000
TIME (SECONDS)
SAT, JAN 31 2009 15:40
NS ANGLE

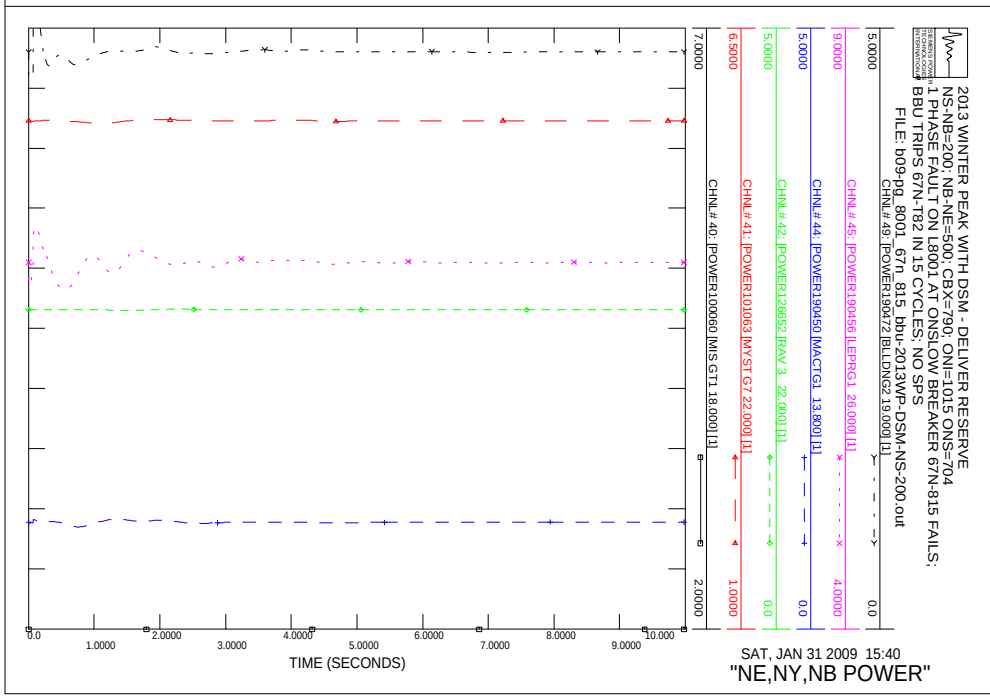
2013 WINTER PEAK WITH DSM - DELIVER RESERVE
NS-NB=200; NB-NE=500; CBX=790; ONI=1015 ONS=704
1 PHASE FAULT ON L8001 AT ONSLOW BREAKER 67N-815 FAILS;
BBU TRIPS 67N-T82 IN 15 CYCLES; NO SPS
FILE: b09-pg_8001_67n_815_bbu-2013WP-DSM-NS-200.out
CHNL# 49: [POWER190472 [BLLDNG2 19.000] [1]
CHNL# 45: [POWER190456 [LEPRG1 26.000] [1]
CHNL# 44: [POWER190450 [MACTG1 13.800] [1]
CHNL# 42: [POWER126652 [RAV 3 22.000] [1]
CHNL# 41: [POWER101063 [MYST G7 22.000] [1]
CHNL# 40: [POWER100060 [MIS GT1 18.000] [1]
5.0000
0.0
9.0000
4.0000
5.0000
0.0
5.0000
0.0
6.5000
1.0000
7.0000
2.0000
0.0
1.0000
2.0000
3.0000
4.0000
5.0000
6.0000
7.0000
8.0000
9.0000
10.000
TIME (SECONDS)
SAT, JAN 31 2009 15:40
"NE,NY,NB POWER"

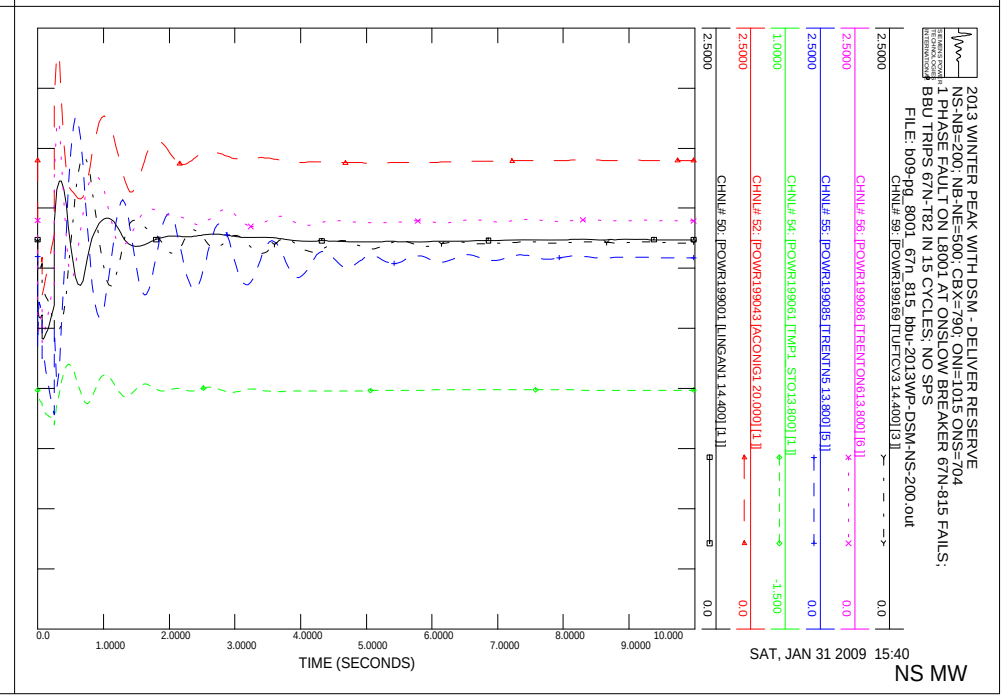
2013 WINTER PEAK WITH DSM - DELIVER RESERVE
NS-NB=200; NB-NE=500; CBX=790; ONI=1015 ONS=704
1 PHASE FAULT ON L8001 AT ONSLOW BREAKER 67N-815 FAILS;
BBU TRIPS 67N-T82 IN 15 CYCLES; NO SPS
FILE: b09-pg_8001_67n_815_bbu-2013WP-DSM-NS-200.out
CHNL# 59: [POWR199169 [TUFTCV3 14.400] [3]]
CHNL# 56: [POWR199086 [TRENTON613.800] [6]]
CHNL# 55: [POWR199085 [TRENTN5 13.800] [5]]
CHNL# 54: [POWR199061 [TMP1 STO13.800] [1]]
CHNL# 52: [POWR199043 [ACONIG1 20.000] [1]]
CHNL# 50: [POWR199001 [LINGAN1 14.400] [1]]
2.5000
0.0
2.5000
0.0
2.5000
0.0
1.0000
-1.500
2.5000
0.0
2.5000
0.0
0.0
1.0000
2.0000
3.0000
4.0000
5.0000
6.0000
7.0000
8.0000
9.0000
10.000
TIME (SECONDS)
SAT, JAN 31 2009 15:40
NS MW

2013 WINTER PEAK WITH DSM - DELIVER RESERVE
NS-NB=200; NB-NE=500; CBX=790; ONI=1015 ONS=704
1 PHASE FAULT ON L8001 AT ONSLOW BREAKER 67N-815 FAILS;
BBU TRIPS 67N-T82 IN 15 CYCLES; NO SPS
FILE: b09-pg_8001_67n_815_bbu-2013WP-DSM-NS-200.out
CHNL# 119: [VARS IR141-DIGBY]
CHNL# 118: [VARS IR137-STATIA]
CHNL# 117: [VARS IR114-GLENDHU]
CHNL# 116: [VARS IR84-DALHOUSIE]
CHNL# 115: [VARS IR82_NUTTBY]
CHNL# 114: [VARS IR45_AMHERST]
TIME (SECONDS)
SAT, JAN 31 2009 15:40
NS WIND MV

2013 WINTER PEAK WITH DSM - DELIVER RESERVE
NS-NB=200; NB-NE=500; CBX=790; ONI=1015 ONS=704
1 PHASE FAULT ON L8001 AT ONSLOW BREAKER 67N-815 FAILS;
BBU TRIPS 67N-T82 IN 15 CYCLES; NO SPS
FILE: b09-pg_8001_67n_815_bbu-2013WP-DSM-NS-200.out
CHNL# 79: [POWER IR141-DIGBY]
CHNL# 78: [POWER IR137-STATIA]
CHNL# 77: [POWER IR114-GLENDHU]
CHNL# 76: [POWER IR84-DALHOUSIE]
CHNL# 75: [POWER IR82_NUTTBY]
CHNL# 74: [POWER IR45_AMHERST]
TIME (SECONDS)
SAT, JAN 31 2009 15:40
NS WIND MW

2013 WINTER PEAK WITH DSM - DELIVER RESERVE
NS-NB=200; NB-NE=500; CBX=790; ONI=1015 ONS=704
1 PHASE FAULT ON L8001 AT ONSLOW BREAKER 67N-815 FAILS;
BBU TRIPS 67N-T82 IN 15 CYCLES; NO SPS
FILE: b09-pg_8001_67n_815_bbu-2013WP-DSM-NS-200.out
CHNL# 133: [VOLT199125 [ONSLOW 345.00]]
CHNL# 132: [VOLT199120 [HOPEWELL 345.00]]
CHNL# 131: [VOLT199045 [WOODBINE345.00]]
CHNL# 130: [VOLT190320 [SALBRY 345.00]]
CHNL# 128: [VOLT190004 [KESWICK 345.00]]
CHNL# 127: [VOLT 70002 [ORRINGTN345.00]]
TIME (SECONDS)
SAT, JAN 31 2009 15:40
"345KV VOLTAGE"

2013 WINTER PEAK WITH DSM - DELIVER RESERVE
NS-NB=200; NB-NE=500; CBX=790; ONI=1015 ONS=704
1 PHASE FAULT ON L8001 AT ONSLOW BREAKER 67N-815 FAILS;
BBU TRIPS 67N-T82 IN 15 CYCLES; NO SPS
FILE: b09-pg_8001_67n_815_bbu-2013WP-DSM-NS-200.out
CHNL# 125: 60*(1+[FREQ199125 [ONSLOW 345.00]])
CHNL# 124: 60*(1+[FREQ199120 [HOPEWELL 345.00]])
CHNL# 123: 60*(1+[FREQ199045 [WOODBINE345.00]])
CHNL# 122: 60*(1+[FREQ190320 [SALBRY 345.00]])
CHNL# 121: 60*(1+[FREQ190197 [C.COVE 345.00]])
CHNL# 120: 60*(1+[FREQ 70002 [ORRINGTN345.00]])
TIME (SECONDS)
SAT, JAN 31 2009 15:40
FREQUENCY HZ

2013 WINTER PEAK WITH DSM - DELIVER RESERVE
NS-NB=200; NB-NE=500; CBX=790; ONI=1015 ONS=704
1 PHASE FAULT ON L8001 AT ONSLOW BREAKER 67N-815 FAILS;
BBU TRIPS 67N-T82 IN 15 CYCLES; NO SPS
FILE: b09-pg_8001_67n_815_bbu-2013WP-DSM-NS-200.out
CHNL# 146: [VOLT199280 [TUSKET A138.00]]
CHNL# 145: [VOLT199193 [HHWAS 138.00]]
CHNL# 144: [VOLT199165 [TUFTCOVE138.00]]
CHNL# 143: [VOLT199138 [SPRNGHIL138.00]]
CHNL# 142: [VOLT199090 [SON-TREN138.00]]
CHNL# 141: [VOLT199051 [HASTINGS138.00]]
1.2000
0.70000
0.0
1.0000
2.0000
3.0000
4.0000
5.0000
6.0000
7.0000
8.0000
9.0000
10.000
TIME (SECONDS)
SAT, JAN 31 2009 15:40
138KV BUS VOLTS

2013 WINTER PEAK WITH DSM - DELIVER RESERVE
NS-NB=200; NB-NE=500; CBX=790; ONI=1015 ONS=704
1 PHASE FAULT ON L8001 AT ONSLOW BREAKER 67N-815 FAILS;
BBU TRIPS 67N-T82 IN 15 CYCLES; NO SPS
FILE: b09-pg_8001_67n_815_bbu-2013WP-DSM-NS-200.out
CHNL# 140: [VOLT199240 [BWATER A230.00]]
CHNL# 139: [VOLT199200 [BRUSHY 230.00]]
CHNL# 138: [VOLT199130 [ONSLOW 230.00]]
CHNL# 137: [VOLT199050 [HASTINGS230.00]]
CHNL# 136: [VOLT199044 [PT.ACONI230.00]]
CHNL# 135: [VOLT199000 [LINGAN 230.00]]
1.2000
0.70000
0.0
1.0000
2.0000
3.0000
4.0000
5.0000
6.0000
7.0000
8.0000
9.0000
10.000
TIME (SECONDS)
SAT, JAN 31 2009 15:40
230KV BUS VOLTS

2013 WINTER PEAK WITH DSM - DELIVER RESERVE
NS-NB=200; NB-NE=500; CBX=790; ONI=1015 ONS=704
1 PHASE FAULT ON L8001 AT ONSLOW BREAKER 67N-815 FAILS;
BBU TRIPS 67N-T82 IN 15 CYCLES; NO SPS
FILE: b09-pg_8001_67n_815_bbu-2013WP-DSM-NS-200.out
CHNL# 217: [L6533MW]
CHNL# 215: [L6503MW]
CHNL# 197: [L8003MW]
CHNL# 195: [L8004MW]
CHNL# 193: [L8001MW]
CHNL# 221: [L3001MW]
250.00
-250.0
500.00
0.0
1000.0
-1000.
0.0
1.0000
2.0000
3.0000
4.0000
5.0000
6.0000
7.0000
8.0000
9.0000
10.000
TIME (SECONDS)
SAT, JAN 31 2009 15:40
LINE FLOW MW

2013 WINTER PEAK WITH DSM - DELIVER RESERVE
NS-NB=200; NB-NE=500; CBX=790; ONI=1015 ONS=704
1 PHASE FAULT ON L8001 AT ONSLOW BREAKER 67N-815 FAILS;
BBU TRIPS 67N-T82 IN 15 CYCLES; NO SPS
FILE: b09-pg_8001_67n_815_bbu-2013WP-DSM-NS-200.out
CHNL# 154: [IR14T-DIGBYH69.0 VOLTS]
CHNL# 153: [IR137-STATIG25.0 VOLTS]
CHNL# 152: [IR114-GLENDH138.0 VOLTS]
CHNL# 151: [IR84-DALHOHV230.0 VOLTS]
CHNL# 150: [IR82 NUTBHV69.0 VOLTS]
CHNL# 149: [IR45 AMHERTP138.0 VOLTS]
1.2000
0.70000
0.0
1.0000
2.0000
3.0000
4.0000
5.0000
6.0000
7.0000
8.0000
9.0000
10.000
TIME (SECONDS)
SAT, JAN 31 2009 15:40
WIND BUS VOLTS

2013 WINTER PEAK WITH DSM - DELIVER RESERVE
NS-NB=200; NB-NE=500; CBX=790; ONI=1015 ONS=704
FILE: b09s-pg_8001_67n_815_bbu-2013WP-DSM-NS-200.out
CHNL# 20: [ANGL199169 [TUFTCV3 14.400] [3]] [ANGL156661 [DARL G1 22.000] [1]]
CHNL# 17: [ANGL199086 [TRENTON613.800] [6]] [ANGL156661 [DARL G1 22.000] [1]]
CHNL# 16: [ANGL199085 [TRENTN5 13.800] [5]] [ANGL156661 [DARL G1 22.000] [1]]
CHNL# 15: [ANGL199061 [TMP1 STO13.800] [1]] [ANGL156661 [DARL G1 22.000] [1]]
CHNL# 13: [ANGL199043 [ACONIG1 20.000] [1]] [ANGL156661 [DARL G1 22.000] [1]]
CHNL# 11: [ANGL199001 [LINGAN1 14.400] [1]] [ANGL156661 [DARL G1 22.000] [1]]
100.00
-100.0
0.0
1.0000
2.0000
3.0000
4.0000
5.0000
6.0000
7.0000
8.0000
9.0000
10.000
TIME (SECONDS)
TUE, FEB 17 2009 11:59
NS ANGLE

2013 WINTER PEAK WITH DSM - DELIVER RESERVE
NS-NB=200; NB-NE=500; CBX=790; ONI=1015 ONS=704
FILE: b09s-pg_8001_67n_815_bbu-2013WP-DSM-NS-200.out
CHNL# 10: [ANGL190472 [BLLDNG2 19.000] [1]] [ANGL156661 [DARL G1 22.000] [1]]
CHNL# 6: [ANGL190456 [LEPRG1 26.000] [1]] [ANGL156661 [DARL G1 22.000] [1]]
CHNL# 5: [ANGL190450 [MACTG1 13.800] [1]] [ANGL156661 [DARL G1 22.000] [1]]
CHNL# 3: [ANGL126652 [RAV 3 22.000] [1]] [ANGL156661 [DARL G1 22.000] [1]]
CHNL# 2: [ANGL101063 [MYST G7 22.000] [1]] [ANGL156661 [DARL G1 22.000] [1]]
CHNL# 1: [ANGL100060 [MIS GT1 18.000] [1]] [ANGL156661 [DARL G1 22.000] [1]]
100.00
-100.0
0.0
1.0000
2.0000
3.0000
4.0000
5.0000
6.0000
7.0000
8.0000
9.0000
10.000
TIME (SECONDS)
TUE, FEB 17 2009 11:59
"NE,NY,NB ANGLE"

2013 WINTER PEAK WITH DSM - DELIVER RESERVE
NS-NB=200; NB-NE=500; CBX=790; ONI=1015 ONS=704
FILE: b09s-pg_8001_67n_815_bbu-2013WP-DSM-NS-200.out
CHNL# 59: [POWR199169 [TUFTCV3 14.400] [3]]
CHNL# 56: [POWR199086 [TRENTON613.800] [6]]
CHNL# 55: [POWR199085 [TRENTN5 13.800] [5]]
CHNL# 54: [POWR199061 [TMP1 STO13.800] [1]]
CHNL# 52: [POWR199043 [ACONIG1 20.000] [1]]
CHNL# 50: [POWR199001 [LINGAN1 14.400] [1]]
2.5000
0.0
-1.500
1.0000
2.0000
3.0000
4.0000
5.0000
6.0000
7.0000
8.0000
9.0000
10.000
TIME (SECONDS)
TUE, FEB 17 2009 11:59
NS MW

2013 WINTER PEAK WITH DSM - DELIVER RESERVE
NS-NB=200; NB-NE=500; CBX=790; ONI=1015 ONS=704
FILE: b09s-pg_8001_67n_815_bbu-2013WP-DSM-NS-200.out
CHNL# 49: [POWER190472 [BLLDNG2 19.000] [1]]
CHNL# 45: [POWER190456 [LEPRG1 26.000] [1]]
CHNL# 44: [POWER190450 [MACTG1 13.800] [1]]
CHNL# 42: [POWER126652 [RAV 3 22.000] [1]]
CHNL# 41: [POWER101063 [MYST G7 22.000] [1]]
CHNL# 40: [POWER100060 [MIS GT1 18.000] [1]]
5.0000
0.0
4.0000
1.0000
2.0000
3.0000
4.0000
5.0000
6.0000
7.0000
8.0000
9.0000
10.000
TIME (SECONDS)
TUE, FEB 17 2009 11:59
"NE,NY,NB POWER"

2013 WINTER PEAK WITH DSM - DELIVER RESERVE
NS-NB=200; NB-NE=500; CBX=790; ONI=1015 ONS=704
FILE: b09s-pg_8001_67n_815_bbu-2013WP-DSM-NS-200.out
CHNL# 119: [VARS IR141-DIGBY]
CHNL# 118: [VARS IR137-STATIA]
CHNL# 117: [VARS IR114-GLENDHU]
CHNL# 116: [VARS IR84-DALHOUSIE]
CHNL# 115: [VARS IR82_NUTTBY]
CHNL# 114: [VARS IR45_AMHERST]
0.50000
-0.5000
TIME (SECONDS)
TUE, FEB 17 2009 11:59
NS WIND MV

2013 WINTER PEAK WITH DSM - DELIVER RESERVE
NS-NB=200; NB-NE=500; CBX=790; ONI=1015 ONS=704
FILE: b09s-pg_8001_67n_815_bbu-2013WP-DSM-NS-200.out
CHNL# 79: [POWER IR141-DIGBY]
CHNL# 78: [POWER IR137-STATIA]
CHNL# 77: [POWER IR114-GLENDHU]
CHNL# 76: [POWER IR84-DALHOUSIE]
CHNL# 75: [POWER IR82_NUTTBY]
CHNL# 74: [POWER IR45_AMHERST]
1.0000
0.0
TIME (SECONDS)
TUE, FEB 17 2009 11:59
NS WIND MW

2013 WINTER PEAK WITH DSM - DELIVER RESERVE
NS-NB=200; NB-NE=500; CBX=790; ONI=1015 ONS=704
FILE: b09s-pg_8001_67n_815_bbu-2013WP-DSM-NS-200.out
CHNL# 133: [VOLT199125 IONSLOW 345.00]
CHNL# 132: [VOLT199120 IHOPEWELL345.00]
CHNL# 131: [VOLT199045 IWOODBINE345.00]
CHNL# 130: [VOLT190320 ISALBRY 345.00]
CHNL# 128: [VOLT190004 IKESWICK 345.00]
CHNL# 127: [VOLT 70002 IORRINGTN345.00]
1.1000
0.90000
TIME (SECONDS)
TUE, FEB 17 2009 11:59
"345KV VOLTAGE"

2013 WINTER PEAK WITH DSM - DELIVER RESERVE
NS-NB=200; NB-NE=500; CBX=790; ONI=1015 ONS=704
FILE: b09s-pg_8001_67n_815_bbu-2013WP-DSM-NS-200.out
CHNL# 125: 60*(1+[FREQ199125 IONSLOW 345.00])
CHNL# 124: 60*(1+[FREQ199120 IHOPEWELL345.00])
CHNL# 123: 60*(1+[FREQ199045 IWOODBINE345.00])
CHNL# 122: 60*(1+[FREQ190320 ISALBRY 345.00])
CHNL# 121: 60*(1+[FREQ190197 IC.COVE 345.00])
CHNL# 120: 60*(1+[FREQ 70002 IORRINGTN345.00])
60.500
59.500
TIME (SECONDS)
TUE, FEB 17 2009 11:59
FREQUENCY HZ

2013 WINTER PEAK WITH DSM - DELIVER RESERVE
NS-NB=200; NB-NE=500; CBX=790; ONI=1015 ONS=704
FILE: b09s-pg_8001_67n_815_bbu-2013WP-DSM-NS-200.out
CHNL# 146: [VOLT199280 [TUSKET A138.00]]
CHNL# 145: [VOLT199193 [HHWAS 138.00]]
CHNL# 144: [VOLT199165 [TUFTCOVE138.00]]
CHNL# 143: [VOLT199135 [SPRNGHLL138.00]]
CHNL# 142: [VOLT199090 [SON-TREN138.00]]
CHNL# 141: [VOLT199051 [HASTINGS138.00]]
TIME (SECONDS)
TUE, FEB 17 2009 11:59
138KV BUS VOLTS

2013 WINTER PEAK WITH DSM - DELIVER RESERVE
NS-NB=200; NB-NE=500; CBX=790; ONI=1015 ONS=704
FILE: b09s-pg_8001_67n_815_bbu-2013WP-DSM-NS-200.out
CHNL# 140: [VOLT199240 [BWATER A230.00]]
CHNL# 139: [VOLT199200 [BRUSHY 230.00]]
CHNL# 138: [VOLT199130 [ONSLOW 230.00]]
CHNL# 137: [VOLT199050 [HASTINGS230.00]]
CHNL# 136: [VOLT199044 [PT.ACONI230.00]]
CHNL# 135: [VOLT199000 [LINGAN 230.00]]
TIME (SECONDS)
TUE, FEB 17 2009 11:59
230KV BUS VOLTS

2013 WINTER PEAK WITH DSM - DELIVER RESERVE
NS-NB=200; NB-NE=500; CBX=790; ONI=1015 ONS=704
FILE: b09s-pg_8001_67n_815_bbu-2013WP-DSM-NS-200.out
CHNL# 217: [L6533NMW]
CHNL# 215: [L6503MW]
CHNL# 197: [L8003MW]
CHNL# 195: [L8004MW]
CHNL# 193: [L8001MW]
CHNL# 221: [L3001MW]
TIME (SECONDS)
TUE, FEB 17 2009 11:59
LINE FLOW MW

2013 WINTER PEAK WITH DSM - DELIVER RESERVE
NS-NB=200; NB-NE=500; CBX=790; ONI=1015 ONS=704
FILE: b09s-pg_8001_67n_815_bbu-2013WP-DSM-NS-200.out
CHNL# 154: [IR141-DIGBYH69.0 VOLTS]
CHNL# 153: [IR137-STATIG25.0 VOLTS]
CHNL# 152: [IR114-GLENDH138.0 VOLTS]
CHNL# 151: [IR84-DALHOHV230.0 VOLTS]
CHNL# 150: [IR82_NUTBHV69.0 VOLTS]
CHNL# 149: [IR45_AMHERTP138.0 VOLTS]
TIME (SECONDS)
TUE, FEB 17 2009 11:59
WIND BUS VOLTS

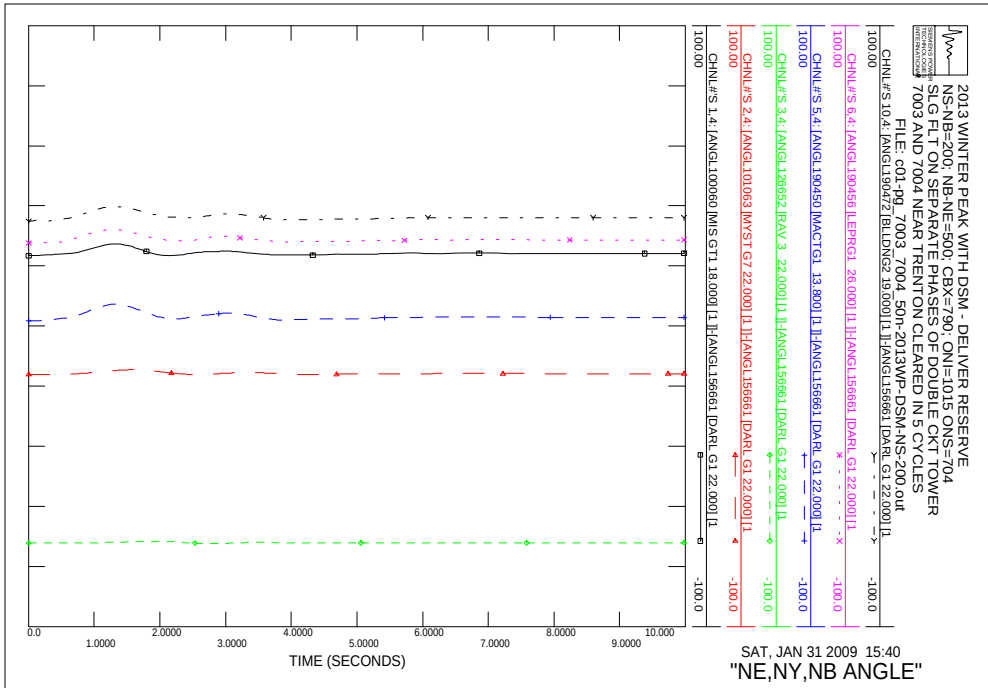
2013 WINTER PEAK WITH DSM - DELIVER RESERVE
NS-NB=200; NB-NE=500; CBX=790; ONI=1015 ONS=704
SLG FLT ON SEPARATE PHASES OF DOUBLE CKT TOWER
7003 AND 7004 NEAR TRENTON CLEARED IN 5 CYCLES
FILE: c01-pg_7003_7004_50n-2013WP-DSM-NS-200.out
CHNL#'S 10,4: [ANGL190472 [BLLDNG2 19.000] [1]]-[ANGL156661 [DARL G1 22.000] [1
CHNL#'S 6,4: [ANGL190456 [LEPRG1 26.000] [1]]-[ANGL156661 [DARL G1 22.000] [1
CHNL#'S 5,4: [ANGL190450 [MACTG1 13.800] [1]]-[ANGL156661 [DARL G1 22.000] [1
CHNL#'S 3,4: [ANGL126652 [RAV 3 22.000] [1]]-[ANGL156661 [DARL G1 22.000] [1
CHNL#'S 2,4: [ANGL101063 [MYST G7 22.000] [1]]-[ANGL156661 [DARL G1 22.000] [1
CHNL#'S 1,4: [ANGL100060 [MIS GT1 18.000] [1]]-[ANGL156661 [DARL G1 22.000] [1
TIME (SECONDS)
SAT, JAN 31 2009 15:40
"NE,NY,NB ANGLE"

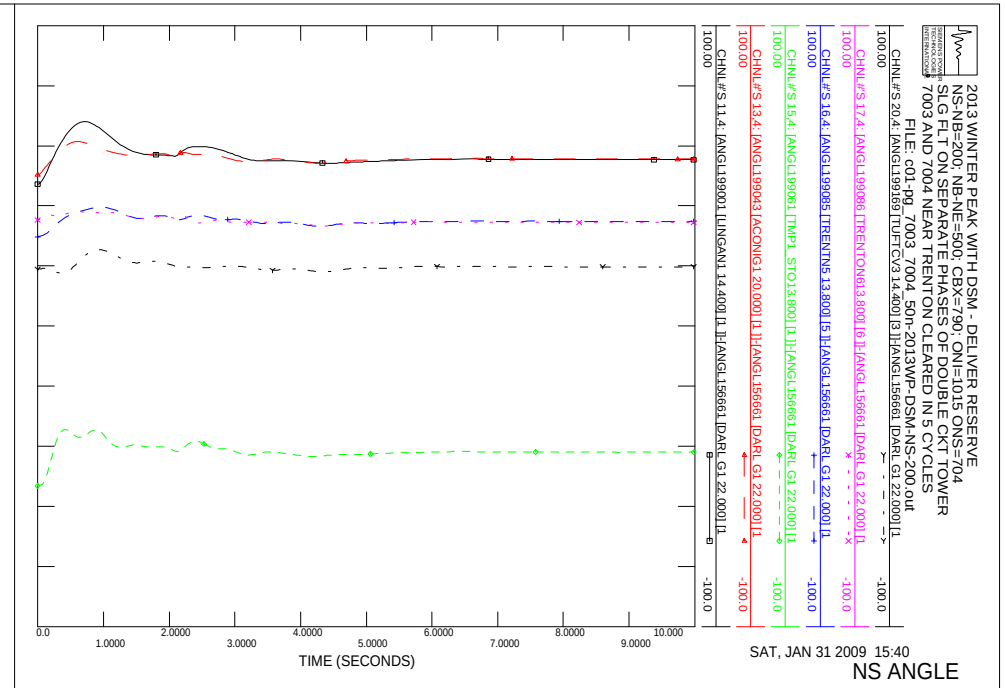
2013 WINTER PEAK WITH DSM - DELIVER RESERVE
NS-NB=200; NB-NE=500; CBX=790; ONI=1015 ONS=704
SLG FLT ON SEPARATE PHASES OF DOUBLE CKT TOWER
7003 AND 7004 NEAR TRENTON CLEARED IN 5 CYCLES
FILE: c01-pg_7003_7004_50n-2013WP-DSM-NS-200.out
CHNL#'S 20,4: [ANGL199169 [TUFTCV3 14.400] [3]]-[ANGL156661 [DARL G1 22.000] [1
CHNL#'S 17,4: [ANGL199086 [TRENTON613.800] [6]]-[ANGL156661 [DARL G1 22.000] [1
CHNL#'S 16,4: [ANGL199085 [TRENTN5 13.800] [5]]-[ANGL156661 [DARL G1 22.000] [1
CHNL#'S 15,4: [ANGL199061 [TMP1 STO13.800] [1]]-[ANGL156661 [DARL G1 22.000] [1
CHNL#'S 13,4: [ANGL199043 [ACONIG1 20.000] [1]]-[ANGL156661 [DARL G1 22.000] [1
CHNL#'S 11,4: [ANGL199001 [LINGAN1 14.400] [1]]-[ANGL156661 [DARL G1 22.000] [1
TIME (SECONDS)
SAT, JAN 31 2009 15:40
NS ANGLE

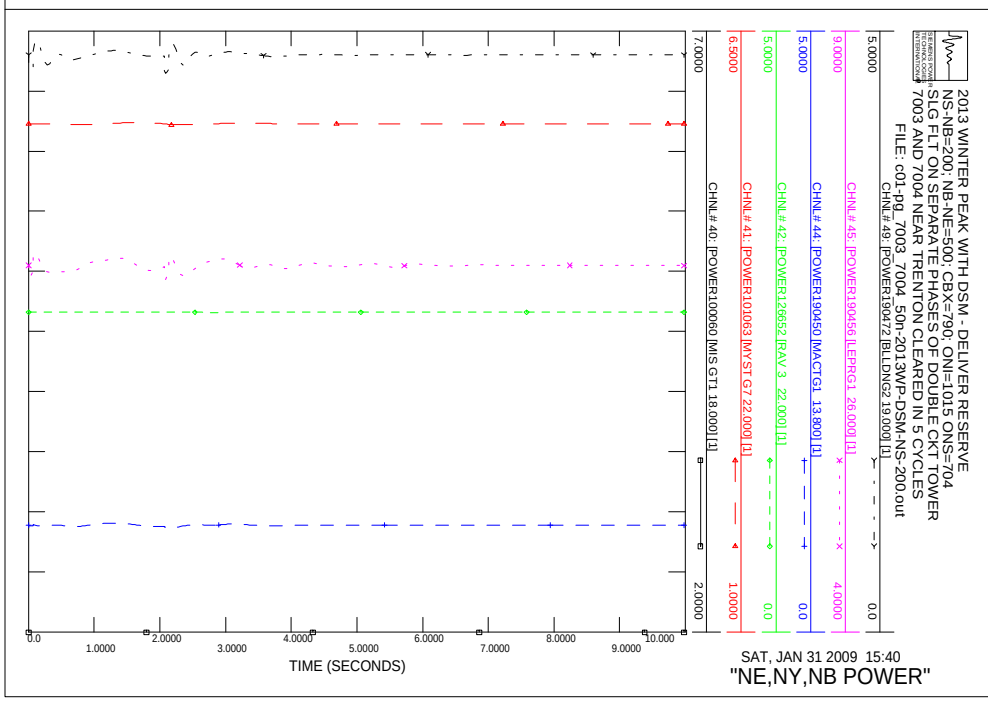
2013 WINTER PEAK WITH DSM - DELIVER RESERVE
NS-NB=200; NB-NE=500; CBX=790; ONI=1015 ONS=704
SLG FLT ON SEPARATE PHASES OF DOUBLE CKT TOWER
7003 AND 7004 NEAR TRENTON CLEARED IN 5 CYCLES
FILE: c01-pg_7003_7004_50n-2013WP-DSM-NS-200.out
CHNL# 49: [POWER190472 [BLLDNG2 19.000] [1]
CHNL# 45: [POWER190456 [LEPRG1 26.000] [1]
CHNL# 44: [POWER190450 [MACTG1 13.800] [1]
CHNL# 42: [POWER126652 [RAV 3 22.000] [1]
CHNL# 41: [POWER101063 [MYST G7 22.000] [1]
CHNL# 40: [POWER100060 [MIS GT1 18.000] [1]
TIME (SECONDS)
SAT, JAN 31 2009 15:40
"NE,NY,NB POWER"

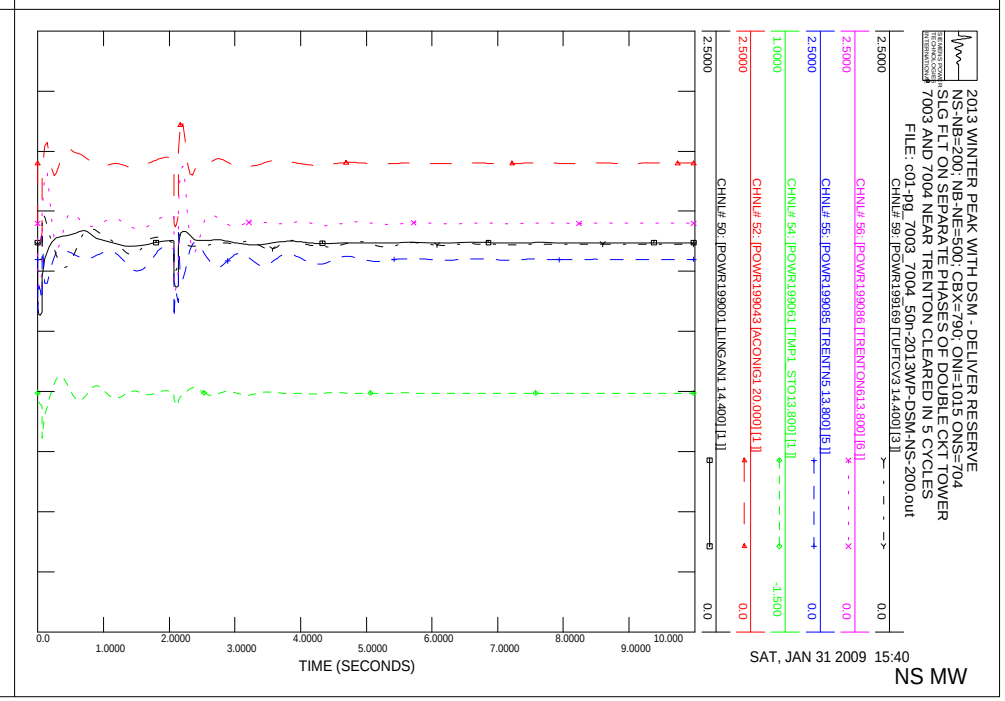
2013 WINTER PEAK WITH DSM - DELIVER RESERVE
NS-NB=200; NB-NE=500; CBX=790; ONI=1015 ONS=704
SLG FLT ON SEPARATE PHASES OF DOUBLE CKT TOWER
7003 AND 7004 NEAR TRENTON CLEARED IN 5 CYCLES
FILE: c01-pg_7003_7004_50n-2013WP-DSM-NS-200.out
CHNL# 59: [POWR199169 [TUFTCV3 14.400] [3]]
CHNL# 56: [POWR199086 [TRENTON613.800] [6]]
CHNL# 55: [POWR199085 [TRENTN5 13.800] [5]]
CHNL# 54: [POWR199061 [TMP1 STO13.800] [1]]
CHNL# 52: [POWR199043 [ACONIG1 20.000] [1]]
CHNL# 50: [POWR199001 [LINGAN1 14.400] [1]]
TIME (SECONDS)
SAT, JAN 31 2009 15:40
NS MW

2013 WINTER PEAK WITH DSM - DELIVER RESERVE
NS-NB=200; NB-NE=500; CBX=790; ONI=1015 ONS=704
SLG FLT ON SEPARATE PHASES OF DOUBLE CKT TOWER
7003 AND 7004 NEAR TRENTON CLEARED IN 5 CYCLES
FILE: c01-pg_7003_7004_50n-2013WP-DSM-NS-200.out
CHNL# 119: [VARS IR141-DIGBY]
CHNL# 118: [VARS IR137-STATIA]
CHNL# 117: [VARS IR114-GLENDHU]
CHNL# 116: [VARS IR84-DALHOUSIE]
CHNL# 115: [VARS IR82_NUTTBY]
CHNL# 114: [VARS IR45_AMHERST]
0.50000
-0.5000
0.0
1.0000
2.0000
3.0000
4.0000
5.0000
6.0000
7.0000
8.0000
9.0000
10.000
TIME (SECONDS)
SAT, JAN 31 2009 15:40
NS WIND MV

2013 WINTER PEAK WITH DSM - DELIVER RESERVE
NS-NB=200; NB-NE=500; CBX=790; ONI=1015 ONS=704
SLG FLT ON SEPARATE PHASES OF DOUBLE CKT TOWER
7003 AND 7004 NEAR TRENTON CLEARED IN 5 CYCLES
FILE: c01-pg_7003_7004_50n-2013WP-DSM-NS-200.out
CHNL# 79: [POWER IR141-DIGBY]
CHNL# 78: [POWER IR137-STATIA]
CHNL# 77: [POWER IR114-GLENDHU]
CHNL# 76: [POWER IR84-DALHOUSIE]
CHNL# 75: [POWER IR82_NUTTBY]
CHNL# 74: [POWER IR45_AMHERST]
1.0000
0.0
1.0000
2.0000
3.0000
4.0000
5.0000
6.0000
7.0000
8.0000
9.0000
10.000
TIME (SECONDS)
SAT, JAN 31 2009 15:40
NS WIND MW

2013 WINTER PEAK WITH DSM - DELIVER RESERVE
NS-NB=200; NB-NE=500; CBX=790; ONI=1015 ONS=704
SLG FLT ON SEPARATE PHASES OF DOUBLE CKT TOWER
7003 AND 7004 NEAR TRENTON CLEARED IN 5 CYCLES
FILE: c01-pg_7003_7004_50n-2013WP-DSM-NS-200.out
CHNL# 133: [VOLT199125 [ONSLOW 345.00]]
CHNL# 132: [VOLT199120 [HOPEWELL 345.00]]
CHNL# 131: [VOLT199045 [WOODBINE345.00]]
CHNL# 130: [VOLT190320 [SALBRY 345.00]]
CHNL# 128: [VOLT190004 [KESWICK 345.00]]
CHNL# 127: [VOLT 70002 [ORRINGTN345.00]]
1.1000
0.90000
0.0
1.0000
2.0000
3.0000
4.0000
5.0000
6.0000
7.0000
8.0000
9.0000
10.000
TIME (SECONDS)
SAT, JAN 31 2009 15:40
"345KV VOLTAGE"

2013 WINTER PEAK WITH DSM - DELIVER RESERVE
NS-NB=200; NB-NE=500; CBX=790; ONI=1015 ONS=704
SLG FLT ON SEPARATE PHASES OF DOUBLE CKT TOWER
7003 AND 7004 NEAR TRENTON CLEARED IN 5 CYCLES
FILE: c01-pg_7003_7004_50n-2013WP-DSM-NS-200.out
CHNL# 125: 60*(1+[FREQ199125 [ONSLOW 345.00]])
CHNL# 124: 60*(1+[FREQ199120 [HOPEWELL 345.00]])
CHNL# 123: 60*(1+[FREQ199045 [WOODBINE345.00]])
CHNL# 122: 60*(1+[FREQ190320 [SALBRY 345.00]])
CHNL# 121: 60*(1+[FREQ190197 [C.COVE 345.00]])
CHNL# 120: 60*(1+[FREQ 70002 [ORRINGTN345.00]])
60.500
59.500
0.0
1.0000
2.0000
3.0000
4.0000
5.0000
6.0000
7.0000
8.0000
9.0000
10.000
TIME (SECONDS)
SAT, JAN 31 2009 15:40
FREQUENCY HZ

2013 WINTER PEAK WITH DSM - DELIVER RESERVE
NS-NB=200; NB-NE=500; CBX=790; ONI=1015 ONS=704
SLG FLT ON SEPARATE PHASES OF DOUBLE CKT TOWER
7003 AND 7004 NEAR TRENTON CLEARED IN 5 CYCLES
FILE: c01-pg_7003_7004_50n-2013WP-DSM-NS-200.out
CHNL# 146: [VOLT199280 [TUSKET A138.00]]
CHNL# 145: [VOLT199193 [HHWAS 138.00]]
CHNL# 144: [VOLT199165 [TUFTCOVE138.00]]
CHNL# 143: [VOLT199138 [SPRNGHIL138.00]]
CHNL# 142: [VOLT199090 [SON-TREN138.00]]
CHNL# 141: [VOLT199051 [HASTINGS138.00]]
1.2000
0.70000
0.0
1.0000
2.0000
3.0000
4.0000
5.0000
6.0000
7.0000
8.0000
9.0000
10.000
TIME (SECONDS)
SAT, JAN 31 2009 15:40
138KV BUS VOLTS

2013 WINTER PEAK WITH DSM - DELIVER RESERVE
NS-NB=200; NB-NE=500; CBX=790; ONI=1015 ONS=704
SLG FLT ON SEPARATE PHASES OF DOUBLE CKT TOWER
7003 AND 7004 NEAR TRENTON CLEARED IN 5 CYCLES
FILE: c01-pg_7003_7004_50n-2013WP-DSM-NS-200.out
CHNL# 140: [VOLT199240 [BWATER A230.00]]
CHNL# 139: [VOLT199200 [BRUSHY 230.00]]
CHNL# 138: [VOLT199130 [ONSLOW 230.00]]
CHNL# 137: [VOLT199050 [HASTINGS230.00]]
CHNL# 136: [VOLT199044 [PT.ACONI230.00]]
CHNL# 135: [VOLT199000 [LINGAN 230.00]]
1.2000
0.70000
0.0
1.0000
2.0000
3.0000
4.0000
5.0000
6.0000
7.0000
8.0000
9.0000
10.000
TIME (SECONDS)
SAT, JAN 31 2009 15:40
230KV BUS VOLTS

2013 WINTER PEAK WITH DSM - DELIVER RESERVE
NS-NB=200; NB-NE=500; CBX=790; ONI=1015 ONS=704
SLG FLT ON SEPARATE PHASES OF DOUBLE CKT TOWER
7003 AND 7004 NEAR TRENTON CLEARED IN 5 CYCLES
FILE: c01-pg_7003_7004_50n-2013WP-DSM-NS-200.out
CHNL# 217: [L6533MW]
CHNL# 215: [L6503MW]
CHNL# 197: [L8003MW]
CHNL# 195: [L8004MW]
CHNL# 193: [L8001MW]
CHNL# 221: [L3001MW]
250.00
500.00
1000.0
0.0
-250.0
-1000.
0.0
1.0000
2.0000
3.0000
4.0000
5.0000
6.0000
7.0000
8.0000
9.0000
10.000
TIME (SECONDS)
SAT, JAN 31 2009 15:40
LINE FLOW MW

2013 WINTER PEAK WITH DSM - DELIVER RESERVE
NS-NB=200; NB-NE=500; CBX=790; ONI=1015 ONS=704
SLG FLT ON SEPARATE PHASES OF DOUBLE CKT TOWER
7003 AND 7004 NEAR TRENTON CLEARED IN 5 CYCLES
FILE: c01-pg_7003_7004_50n-2013WP-DSM-NS-200.out
CHNL# 154: [IR141-DIGBYH69.0 VOLTS]
CHNL# 153: [IR137-STATIG25.0 VOLTS]
CHNL# 152: [IR114-GLENDH138.0 VOLTS]
CHNL# 151: [IR84-DALHOHV230.0 VOLTS]
CHNL# 150: [IR82_NUTBHV69.0 VOLTS]
CHNL# 149: [IR45_AMHERTP138.0 VOLTS]
1.2000
0.70000
0.0
1.0000
2.0000
3.0000
4.0000
5.0000
6.0000
7.0000
8.0000
9.0000
10.000
TIME (SECONDS)
SAT, JAN 31 2009 15:40
WIND BUS VOLTS

2013 WINTER PEAK WITH DSM - DELIVER RESERVE
NS-NB=200; NB-NE=500; CBX=790; ONI=1015 ONS=704
SLG FLT ON SEPARATE PHASES OF DOUBLE CKT TOWER
8004 AND 7004 CANSO CROSSING SPS TRIPS 1 LINGAN
FILE: c03s-pg_8004_7005_strait-2013WP-DSM-NS-200.out
CHNL# 20: [ANGL199169 [TUFTCV3 14.400] [3]] [ANGL156661 [DARL G1 22.000] [1
CHNL# 17: [ANGL199086 [TRENTON613.800] [6]] [ANGL156661 [DARL G1 22.000] [1
CHNL# 16: [ANGL199085 [TRENTN5 13.800] [5]] [ANGL156661 [DARL G1 22.000] [1
CHNL# 15: [ANGL199061 [TMP1 STO13.800] [1]] [ANGL156661 [DARL G1 22.000] [1
CHNL# 13: [ANGL199043 [ACONIG1 20.000] [1]] [ANGL156661 [DARL G1 22.000] [1
CHNL# 11: [ANGL199001 [LINGAN1 14.400] [1]] [ANGL156661 [DARL G1 22.000] [1
100.00
-100.0
0.0
1.0000
2.0000
3.0000
4.0000
5.0000
6.0000
7.0000
8.0000
9.0000
10.000
TIME (SECONDS)
SAT, JAN 31 2009 15:40
NS ANGLE

2013 WINTER PEAK WITH DSM - DELIVER RESERVE
NS-NB=200; NB-NE=500; CBX=790; ONI=1015 ONS=704
SLG FLT ON SEPARATE PHASES OF DOUBLE CKT TOWER
8004 AND 7004 CANSO CROSSING SPS TRIPS 1 LINGAN
FILE: c03s-pg_8004_7005_strait-2013WP-DSM-NS-200.out
CHNL# 10: [ANGL190472 [BLLDNG2 19.000] [1]] [ANGL156661 [DARL G1 22.000] [1
CHNL# 6: [ANGL190456 [LEPRG1 26.000] [1]] [ANGL156661 [DARL G1 22.000] [1
CHNL# 5: [ANGL190450 [MACTG1 13.800] [1]] [ANGL156661 [DARL G1 22.000] [1
CHNL# 3: [ANGL126652 [RAV 3 22.000] [1]] [ANGL156661 [DARL G1 22.000] [1
CHNL# 2: [ANGL101063 [MYST G7 22.000] [1]] [ANGL156661 [DARL G1 22.000] [1
CHNL# 1: [ANGL100060 [MIS GT1 18.000] [1]] [ANGL156661 [DARL G1 22.000] [1
100.00
-100.0
0.0
1.0000
2.0000
3.0000
4.0000
5.0000
6.0000
7.0000
8.0000
9.0000
10.000
TIME (SECONDS)
SAT, JAN 31 2009 15:40
"NE,NY,NB ANGLE"

2013 WINTER PEAK WITH DSM - DELIVER RESERVE
NS-NB=200; NB-NE=500; CBX=790; ONI=1015 ONS=704
SLG FLT ON SEPARATE PHASES OF DOUBLE CKT TOWER
8004 AND 7004 CANSO CROSSING SPS TRIPS 1 LINGAN
FILE: c03s-pg_8004_7005_strait-2013WP-DSM-NS-200.out
CHNL# 59: [POWR199169 [TUFTCV3 14.400] [3]]
CHNL# 56: [POWR199086 [TRENTON613.800] [6]]
CHNL# 55: [POWR199085 [TRENTN5 13.800] [5]]
CHNL# 54: [POWR199061 [TMP1 STO13.800] [1]]
CHNL# 52: [POWR199043 [ACONIG1 20.000] [1]]
CHNL# 50: [POWR199001 [LINGAN1 14.400] [1]]
2.5000
-1.500
0.0
1.0000
2.0000
3.0000
4.0000
5.0000
6.0000
7.0000
8.0000
9.0000
10.000
TIME (SECONDS)
SAT, JAN 31 2009 15:40
NS MW

2013 WINTER PEAK WITH DSM - DELIVER RESERVE
NS-NB=200; NB-NE=500; CBX=790; ONI=1015 ONS=704
SLG FLT ON SEPARATE PHASES OF DOUBLE CKT TOWER
8004 AND 7004 CANSO CROSSING SPS TRIPS 1 LINGAN
FILE: c03s-pg_8004_7005_strait-2013WP-DSM-NS-200.out
CHNL# 49: [POWER190472 [BLLDNG2 19.000] [1]]
CHNL# 45: [POWER190456 [LEPRG1 26.000] [1]]
CHNL# 44: [POWER190450 [MACTG1 13.800] [1]]
CHNL# 42: [POWER126652 [RAV 3 22.000] [1]]
CHNL# 41: [POWER101063 [MYST G7 22.000] [1]]
CHNL# 40: [POWER100060 [MIS GT1 18.000] [1]]
5.0000
4.0000
0.0
1.0000
2.0000
3.0000
4.0000
5.0000
6.0000
7.0000
8.0000
9.0000
10.000
TIME (SECONDS)
SAT, JAN 31 2009 15:40
"NE,NY,NB POWER"

2013 WINTER PEAK WITH DSM - DELIVER RESERVE
NS-NB=200; NB-NE=500; CBX=790; ONI=1015 ONS=704
SLG FLT ON SEPARATE PHASES OF DOUBLE CKT TOWER
8004 AND 7004 CANSO CROSSING SPS TRIPS 1 LINGAN
FILE: c03s-pg_8004_7005_strait-2013WP-DSM-NS-200.out
CHNL# 119: [VARS IR141-DIGBY]
CHNL# 118: [VARS IR137-STATIA]
CHNL# 117: [VARS IR114-GLENDHU]
CHNL# 116: [VARS IR84-DALHOUSIE]
CHNL# 115: [VARS IR82_NUTTBY]
CHNL# 114: [VARS IR45_AMHERST]
SAT, JAN 31 2009 15:40
TIME (SECONDS)
NS WIND MV

2013 WINTER PEAK WITH DSM - DELIVER RESERVE
NS-NB=200; NB-NE=500; CBX=790; ONI=1015 ONS=704
SLG FLT ON SEPARATE PHASES OF DOUBLE CKT TOWER
8004 AND 7004 CANSO CROSSING SPS TRIPS 1 LINGAN
FILE: c03s-pg_8004_7005_strait-2013WP-DSM-NS-200.out
CHNL# 79: [POWER IR141-DIGBY]
CHNL# 78: [POWER IR137-STATIA]
CHNL# 77: [POWER IR114-GLENDHU]
CHNL# 76: [POWER IR84-DALHOUSIE]
CHNL# 75: [POWER IR82_NUTTBY]
CHNL# 74: [POWER IR45_AMHERST]
SAT, JAN 31 2009 15:40
TIME (SECONDS)
NS WIND MW

2013 WINTER PEAK WITH DSM - DELIVER RESERVE
NS-NB=200; NB-NE=500; CBX=790; ONI=1015 ONS=704
SLG FLT ON SEPARATE PHASES OF DOUBLE CKT TOWER
8004 AND 7004 CANSO CROSSING SPS TRIPS 1 LINGAN
FILE: c03s-pg_8004_7005_strait-2013WP-DSM-NS-200.out
CHNL# 133: [VOLT199125 [ONSLOW 345.00]]
CHNL# 132: [VOLT199120 [HOPEWELL 345.00]]
CHNL# 131: [VOLT199045 [WOODBINE345.00]]
CHNL# 130: [VOLT190320 [SALBRY 345.00]]
CHNL# 128: [VOLT190004 [KESWICK 345.00]]
CHNL# 127: [VOLT 70002 [ORRINGTN345.00]]
SAT, JAN 31 2009 15:40
TIME (SECONDS)
"345KV VOLTAGE"

2013 WINTER PEAK WITH DSM - DELIVER RESERVE
NS-NB=200; NB-NE=500; CBX=790; ONI=1015 ONS=704
SLG FLT ON SEPARATE PHASES OF DOUBLE CKT TOWER
8004 AND 7004 CANSO CROSSING SPS TRIPS 1 LINGAN
FILE: c03s-pg_8004_7005_strait-2013WP-DSM-NS-200.out
CHNL# 125: 60*(1+[FREQ199125 [ONSLOW 345.00]])
CHNL# 124: 60*(1+[FREQ199120 [HOPEWELL 345.00]])
CHNL# 123: 60*(1+[FREQ199045 [WOODBINE345.00]])
CHNL# 122: 60*(1+[FREQ190320 [SALBRY 345.00]])
CHNL# 121: 60*(1+[FREQ190197 [C.COVE 345.00]])
CHNL# 120: 60*(1+[FREQ 70002 [ORRINGTN345.00]])
SAT, JAN 31 2009 15:40
TIME (SECONDS)
FREQUENCY HZ

2013 WINTER PEAK WITH DSM - DELIVER RESERVE
NS-NB=200; NB-NE=500; CBX=790; ONI=1015 ONS=704
SLG FLT ON SEPARATE PHASES OF DOUBLE CKT TOWER
8004 AND 7004 CANSO CROSSING SPS TRIPS 1 LINGAN
FILE: c03s-pg_8004_7005_strait-2013WP-DSM-NS-200.out
CHNL# 146: [VOLT199280 [TUSKET A138.00]]
CHNL# 145: [VOLT199193 [HHWAS 138.00]]
CHNL# 144: [VOLT199165 [TUFTCOVE138.00]]
CHNL# 143: [VOLT199138 [SPRNGHILL138.00]]
CHNL# 142: [VOLT199090 [SON-TREN138.00]]
CHNL# 141: [VOLT199051 [HASTINGS138.00]]
1.2000
0.70000
0.0
1.0000
2.0000
3.0000
4.0000
5.0000
6.0000
7.0000
8.0000
9.0000
10.000
TIME (SECONDS)
SAT, JAN 31 2009 15:40
138KV BUS VOLTS

2013 WINTER PEAK WITH DSM - DELIVER RESERVE
NS-NB=200; NB-NE=500; CBX=790; ONI=1015 ONS=704
SLG FLT ON SEPARATE PHASES OF DOUBLE CKT TOWER
8004 AND 7004 CANSO CROSSING SPS TRIPS 1 LINGAN
FILE: c03s-pg_8004_7005_strait-2013WP-DSM-NS-200.out
CHNL# 140: [VOLT199240 [BWATER A230.00]]
CHNL# 139: [VOLT199200 [BRUSHY 230.00]]
CHNL# 138: [VOLT199130 [ONSLOW 230.00]]
CHNL# 137: [VOLT199050 [HASTINGS230.00]]
CHNL# 136: [VOLT199044 [PT.ACONI230.00]]
CHNL# 135: [VOLT199000 [LINGAN 230.00]]
1.2000
0.70000
0.0
1.0000
2.0000
3.0000
4.0000
5.0000
6.0000
7.0000
8.0000
9.0000
10.000
TIME (SECONDS)
SAT, JAN 31 2009 15:40
230KV BUS VOLTS

2013 WINTER PEAK WITH DSM - DELIVER RESERVE
NS-NB=200; NB-NE=500; CBX=790; ONI=1015 ONS=704
SLG FLT ON SEPARATE PHASES OF DOUBLE CKT TOWER
8004 AND 7004 CANSO CROSSING SPS TRIPS 1 LINGAN
FILE: c03s-pg_8004_7005_strait-2013WP-DSM-NS-200.out
CHNL# 217: [L6513MW]
CHNL# 215: [L6503MW]
CHNL# 197: [L8003MW]
CHNL# 195: [L8004MW]
CHNL# 193: [L8001MW]
CHNL# 221: [L3001MW]
250.00
-250.0
500.00
0.0
1000.0
-1000.
0.0
1.0000
2.0000
3.0000
4.0000
5.0000
6.0000
7.0000
8.0000
9.0000
10.000
TIME (SECONDS)
SAT, JAN 31 2009 15:40
LINE FLOW MW

2013 WINTER PEAK WITH DSM - DELIVER RESERVE
NS-NB=200; NB-NE=500; CBX=790; ONI=1015 ONS=704
SLG FLT ON SEPARATE PHASES OF DOUBLE CKT TOWER
8004 AND 7004 CANSO CROSSING SPS TRIPS 1 LINGAN
FILE: c03s-pg_8004_7005_strait-2013WP-DSM-NS-200.out
CHNL# 154: [IR141-DIGBYH69.0 VOLTS]
CHNL# 153: [IR137-STATIG25.0 VOLTS]
CHNL# 152: [IR114-GLENDH138.0 VOLTS]
CHNL# 151: [IR84-DALHOHV230.0 VOLTS]
CHNL# 150: [IR82 NUTBHV69.0 VOLTS]
CHNL# 149: [IR45 AMHERTP138.0 VOLTS]
1.2000
0.70000
0.0
1.0000
2.0000
3.0000
4.0000
5.0000
6.0000
7.0000
8.0000
9.0000
10.000
TIME (SECONDS)
SAT, JAN 31 2009 15:40
WIND BUS VOLTS

2013 WINTER PEAK WITH DSM - DELIVER RESERVE
NS-NB=200; NB-NE=500; CBX=790; ONI=1015 ONS=704
1 PHASE FAULT ON TRENTON BUS-TIE BREAKER 50N604
5 CYCLES, NO RECLOSING, CLEARS WHOLE 138 KV STATION
FILE: d03-1ph_50n604-2013WP-DSM-NS-200.out
CHNL#'S 20:4: [ANGL199169 [TUFTCV3 14.400] [3]] [ANGL156661 [DARL G1 22.000] [1]] 100.00 -100.0
CHNL#'S 17:4: [ANGL199086 [TRENTON613.800] [6]] [ANGL156661 [DARL G1 22.000] [1]] 100.00 -100.0
CHNL#'S 16:4: [ANGL199085 [TRENTN5 13.800] [5]] [ANGL156661 [DARL G1 22.000] [1]] 100.00 -100.0
CHNL#'S 15:4: [ANGL199061 [TMP1 STO13.800] [1]] [ANGL156661 [DARL G1 22.000] [1]] 100.00 -100.0
CHNL#'S 13:4: [ANGL199043 [ACONIG1 20.000] [1]] [ANGL156661 [DARL G1 22.000] [1]] 100.00 -100.0
CHNL#'S 11:4: [ANGL199001 [LINGAN1 14.400] [1]] [ANGL156661 [DARL G1 22.000] [1]] 100.00 -100.0
0.0 1.0000 2.0000 3.0000 4.0000 5.0000 6.0000 7.0000 8.0000 9.0000 10.000
TIME (SECONDS)
SAT, JAN 31 2009 15:40
NS ANGLE

2013 WINTER PEAK WITH DSM - DELIVER RESERVE
NS-NB=200; NB-NE=500; CBX=790; ONI=1015 ONS=704
1 PHASE FAULT ON TRENTON BUS-TIE BREAKER 50N604
5 CYCLES, NO RECLOSING, CLEARS WHOLE 138 KV STATION
FILE: d03-1ph_50n604-2013WP-DSM-NS-200.out
CHNL#'S 10:4: [ANGL190472 [BLLDNG2 19.000] [1]] [ANGL156661 [DARL G1 22.000] [1]] 100.00 -100.0
CHNL#'S 6:4: [ANGL190456 [LEPRG1 26.000] [1]] [ANGL156661 [DARL G1 22.000] [1]] 100.00 -100.0
CHNL#'S 5:4: [ANGL190450 [MACTG1 13.800] [1]] [ANGL156661 [DARL G1 22.000] [1]] 100.00 -100.0
CHNL#'S 3:4: [ANGL126652 [RAV 3 22.000] [1]] [ANGL156661 [DARL G1 22.000] [1]] 100.00 -100.0
CHNL#'S 2:4: [ANGL101063 [MYST G7 22.000] [1]] [ANGL156661 [DARL G1 22.000] [1]] 100.00 -100.0
CHNL#'S 1:4: [ANGL100060 [MIS GT1 18.000] [1]] [ANGL156661 [DARL G1 22.000] [1]] 100.00 -100.0
0.0 1.0000 2.0000 3.0000 4.0000 5.0000 6.0000 7.0000 8.0000 9.0000 10.000
TIME (SECONDS)
SAT, JAN 31 2009 15:40
"NE,NY,NB ANGLE"

2013 WINTER PEAK WITH DSM - DELIVER RESERVE
NS-NB=200; NB-NE=500; CBX=790; ONI=1015 ONS=704
1 PHASE FAULT ON TRENTON BUS-TIE BREAKER 50N604
5 CYCLES, NO RECLOSING, CLEARS WHOLE 138 KV STATION
FILE: d03-1ph_50n604-2013WP-DSM-NS-200.out
CHNL# 59: [POWR199169 [TUFTCV3 14.400] [3]] 2.5000 0.0
CHNL# 56: [POWR199086 [TRENTON613.800] [6]] 2.5000 0.0
CHNL# 55: [POWR199085 [TRENTN5 13.800] [5]] 2.5000 0.0
CHNL# 54: [POWR199061 [TMP1 STO13.800] [1]] 1.0000 -1.500
CHNL# 52: [POWR199043 [ACONIG1 20.000] [1]] 2.5000 0.0
CHNL# 50: [POWR199001 [LINGAN1 14.400] [1]] 2.5000 0.0
0.0 1.0000 2.0000 3.0000 4.0000 5.0000 6.0000 7.0000 8.0000 9.0000 10.000
TIME (SECONDS)
SAT, JAN 31 2009 15:40
NS MW

2013 WINTER PEAK WITH DSM - DELIVER RESERVE
NS-NB=200; NB-NE=500; CBX=790; ONI=1015 ONS=704
1 PHASE FAULT ON TRENTON BUS-TIE BREAKER 50N604
5 CYCLES, NO RECLOSING, CLEARS WHOLE 138 KV STATION
FILE: d03-1ph_50n604-2013WP-DSM-NS-200.out
CHNL# 49: [POWER190472 [BLLDNG2 19.000] [1]] 5.0000 0.0
CHNL# 45: [POWER190456 [LEPRG1 26.000] [1]] 9.0000 4.0000
CHNL# 44: [POWER190450 [MACTG1 13.800] [1]] 5.0000 0.0
CHNL# 42: [POWER126652 [RAV 3 22.000] [1]] 5.0000 0.0
CHNL# 41: [POWER101063 [MYST G7 22.000] [1]] 6.5000 1.0000
CHNL# 40: [POWER100060 [MIS GT1 18.000] [1]] 7.0000 2.0000
0.0 1.0000 2.0000 3.0000 4.0000 5.0000 6.0000 7.0000 8.0000 9.0000 10.000
TIME (SECONDS)
SAT, JAN 31 2009 15:40
"NE,NY,NB POWER"

2013 WINTER PEAK WITH DSM - DELIVER RESERVE
NS-NB=200; NB-NE=500; CBX=790; ONI=1015 ONS=704
1 PHASE FAULT ON TRENTON BUS-TIE BREAKER 50N604
5 CYCLES, NO RECLOSING, CLEARS WHOLE 138 KV STATION
FILE: d03-1ph_50n604-2013WP-DSM-NS-200.out
CHNL# 119: [VARS IR141-DIGBY]
CHNL# 118: [VARS IR137-STATIA]
CHNL# 117: [VARS IR114-GLENDHU]
CHNL# 116: [VARS IR84-DALHOUSIE]
CHNL# 115: [VARS IR82_NUTTBY]
CHNL# 114: [VARS IR45_AMHERST]
0.50000
-0.5000
0.0
1.0000
2.0000
3.0000
4.0000
5.0000
6.0000
7.0000
8.0000
9.0000
10.000
TIME (SECONDS)
SAT, JAN 31 2009 15:40
NS WIND MV

2013 WINTER PEAK WITH DSM - DELIVER RESERVE
NS-NB=200; NB-NE=500; CBX=790; ONI=1015 ONS=704
1 PHASE FAULT ON TRENTON BUS-TIE BREAKER 50N604
5 CYCLES, NO RECLOSING, CLEARS WHOLE 138 KV STATION
FILE: d03-1ph_50n604-2013WP-DSM-NS-200.out
CHNL# 79: [POWER IR141-DIGBY]
CHNL# 78: [POWER IR137-STATIA]
CHNL# 77: [POWER IR114-GLENDHU]
CHNL# 76: [POWER IR84-DALHOUSIE]
CHNL# 75: [POWER IR82_NUTTBY]
CHNL# 74: [POWER IR45_AMHERST]
1.0000
0.0
TIME (SECONDS)
SAT, JAN 31 2009 15:40
NS WIND MW

2013 WINTER PEAK WITH DSM - DELIVER RESERVE
NS-NB=200; NB-NE=500; CBX=790; ONI=1015 ONS=704
1 PHASE FAULT ON TRENTON BUS-TIE BREAKER 50N604
5 CYCLES, NO RECLOSING, CLEARS WHOLE 138 KV STATION
FILE: d03-1ph_50n604-2013WP-DSM-NS-200.out
CHNL# 133: [VOLT199125 IONSLOW 345.00]
CHNL# 132: [VOLT199120 IHOPEWELL345.00]
CHNL# 131: [VOLT199045 IWOODBINE345.00]
CHNL# 130: [VOLT190320 ISALBRY 345.00]
CHNL# 128: [VOLT190004 IKESWICK 345.00]
CHNL# 127: [VOLT 70002 IORRINGTN345.00]
1.1000
0.90000
0.0
1.0000
2.0000
3.0000
4.0000
5.0000
6.0000
7.0000
8.0000
9.0000
10.000
TIME (SECONDS)
SAT, JAN 31 2009 15:40
"345KV VOLTAGE"

2013 WINTER PEAK WITH DSM - DELIVER RESERVE
NS-NB=200; NB-NE=500; CBX=790; ONI=1015 ONS=704
1 PHASE FAULT ON TRENTON BUS-TIE BREAKER 50N604
5 CYCLES, NO RECLOSING, CLEARS WHOLE 138 KV STATION
FILE: d03-1ph_50n604-2013WP-DSM-NS-200.out
CHNL# 125: 60*(1+[FREQ199125 IONSLOW 345.00])
CHNL# 124: 60*(1+[FREQ199120 IHOPEWELL345.00])
CHNL# 123: 60*(1+[FREQ199045 IWOODBINE345.00])
CHNL# 122: 60*(1+[FREQ190320 ISALBRY 345.00])
CHNL# 121: 60*(1+[FREQ190197 IC.COVE 345.00])
CHNL# 120: 60*(1+[FREQ 70002 IORRINGTN345.00])
60.500
59.500
0.0
1.0000
2.0000
3.0000
4.0000
5.0000
6.0000
7.0000
8.0000
9.0000
10.000
TIME (SECONDS)
SAT, JAN 31 2009 15:40
FREQUENCY HZ

2013 WINTER PEAK WITH DSM - DELIVER RESERVE
NS-NB=200; NB-NE=500; CBX=790; ONI=1015 ONS=704
1 PHASE FAULT ON TRENTON BUS-TIE BREAKER 50N604
5 CYCLES, NO RECLOSING, CLEARS WHOLE 138 KV STATION
FILE: d03-1ph_50n604-2013WP-DSM-NS-200.out
CHNL# 146: [VOLT199280 [TUSKET A138.00]]
CHNL# 145: [VOLT199193 [HHWAS 138.00]]
CHNL# 144: [VOLT199165 [TUFTCOVE138.00]]
CHNL# 143: [VOLT199138: [SPRNGHIL138.00]]
CHNL# 142: [VOLT199090 [50N-TREN138.00]]
CHNL# 141: [VOLT199051 [HASTINGS138.00]]
1.2000
0.70000
0.0
1.0000
2.0000
3.0000
4.0000
5.0000
6.0000
7.0000
8.0000
9.0000
10.000
TIME (SECONDS)
SAT, JAN 31 2009 15:40
138KV BUS VOLTS

2013 WINTER PEAK WITH DSM - DELIVER RESERVE
NS-NB=200; NB-NE=500; CBX=790; ONI=1015 ONS=704
1 PHASE FAULT ON TRENTON BUS-TIE BREAKER 50N604
5 CYCLES, NO RECLOSING, CLEARS WHOLE 138 KV STATION
FILE: d03-1ph_50n604-2013WP-DSM-NS-200.out
CHNL# 140: [VOLT199240 [BWATER A230.00]]
CHNL# 139: [VOLT199200 [BRUSHY 230.00]]
CHNL# 138: [VOLT199130 [ONSLOW 230.00]]
CHNL# 137: [VOLT199050 [HASTINGS230.00]]
CHNL# 136: [VOLT199044 [PT.ACONI230.00]]
CHNL# 135: [VOLT199000 [LINGAN 230.00]]
1.2000
0.70000
0.0
1.0000
2.0000
3.0000
4.0000
5.0000
6.0000
7.0000
8.0000
9.0000
10.000
TIME (SECONDS)
SAT, JAN 31 2009 15:40
230KV BUS VOLTS

2013 WINTER PEAK WITH DSM - DELIVER RESERVE
NS-NB=200; NB-NE=500; CBX=790; ONI=1015 ONS=704
1 PHASE FAULT ON TRENTON BUS-TIE BREAKER 50N604
5 CYCLES, NO RECLOSING, CLEARS WHOLE 138 KV STATION
FILE: d03-1ph_50n604-2013WP-DSM-NS-200.out
CHNL# 217: [L6533NMW]
CHNL# 215: [L6503MW]
CHNL# 197: [L8003MW]
CHNL# 195: [L8004MW]
CHNL# 193: [L8001MW]
CHNL# 221: [L3001MW]
250.00
500.00
1000.0
0.0
-250.0
-1000.
1.0000
2.0000
3.0000
4.0000
5.0000
6.0000
7.0000
8.0000
9.0000
10.000
TIME (SECONDS)
SAT, JAN 31 2009 15:40
LINE FLOW MW

2013 WINTER PEAK WITH DSM - DELIVER RESERVE
NS-NB=200; NB-NE=500; CBX=790; ONI=1015 ONS=704
1 PHASE FAULT ON TRENTON BUS-TIE BREAKER 50N604
5 CYCLES, NO RECLOSING, CLEARS WHOLE 138 KV STATION
FILE: d03-1ph_50n604-2013WP-DSM-NS-200.out
CHNL# 154: [IR141-DIGBYH69.0 VOLTS]
CHNL# 153: [IR137-STATIG25.0 VOLTS]
CHNL# 152: [IR114-GLENDH138.0 VOLTS]
CHNL# 151: [IR84-DALHOHV230.0 VOLTS]
CHNL# 150: [IR82_NUTBHV69.0 VOLTS]
CHNL# 149: [IR45_AMHERTP138.0 VOLTS]
1.2000
0.70000
0.0
1.0000
2.0000
3.0000
4.0000
5.0000
6.0000
7.0000
8.0000
9.0000
10.000
TIME (SECONDS)
SAT, JAN 31 2009 15:40
WIND BUS VOLTS

2013 WINTER PEAK WITH DSM - DELIVER RESERVE
NS-NB=200; NB-NE=500; CBX=790; ONI=1015 ONS=704
SLG FAULT ON LINGAN BREAKER 88S7211
TRIPS LINGAN 3 AND 4 IN 4 CYCLES
FILE: d04-88s721_1ph-2013WP-DSM-NS-200.out
CHNL#S 20:4: [ANGL199169 [TUFTCV3 14.400] [3]] [ANGL156661 [DARL G1 22.000] [1
CHNL#S 17:4: [ANGL199086 [TRENTON613.800] [6]] [ANGL156661 [DARL G1 22.000] [1
CHNL#S 16:4: [ANGL199085 [TRENTN5 13.800] [5]] [ANGL156661 [DARL G1 22.000] [1
CHNL#S 15:4: [ANGL199061 [TMP1 STO13.800] [1]] [ANGL156661 [DARL G1 22.000] [1
CHNL#S 13:4: [ANGL199043 [ACONIG1 20.000] [1]] [ANGL156661 [DARL G1 22.000] [1
CHNL#S 11:4: [ANGL199001 [LINGAN1 14.400] [1]] [ANGL156661 [DARL G1 22.000] [1
100.00
-100.0
0.0
1.0000
2.0000
3.0000
4.0000
5.0000
6.0000
7.0000
8.0000
9.0000
10.000
TIME (SECONDS)
SAT, JAN 31 2009 15:40
NS ANGLE

2013 WINTER PEAK WITH DSM - DELIVER RESERVE
NS-NB=200; NB-NE=500; CBX=790; ONI=1015 ONS=704
SLG FAULT ON LINGAN BREAKER 88S7211
TRIPS LINGAN 3 AND 4 IN 4 CYCLES
FILE: d04-88s721_1ph-2013WP-DSM-NS-200.out
CHNL#S 10:4: [ANGL190472 [BLLDNG2 19.000] [1]] [ANGL156661 [DARL G1 22.000] [1
CHNL#S 6:4: [ANGL190456 [LEPRG1 26.000] [1]] [ANGL156661 [DARL G1 22.000] [1
CHNL#S 5:4: [ANGL190450 [MACTG1 13.800] [1]] [ANGL156661 [DARL G1 22.000] [1
CHNL#S 3:4: [ANGL126652 [RAV 3 22.000] [1]] [ANGL156661 [DARL G1 22.000] [1
CHNL#S 2:4: [ANGL101063 [MYST G7 22.000] [1]] [ANGL156661 [DARL G1 22.000] [1
CHNL#S 1:4: [ANGL100060 [MIS GT1 18.000] [1]] [ANGL156661 [DARL G1 22.000] [1
100.00
-100.0
0.0
1.0000
2.0000
3.0000
4.0000
5.0000
6.0000
7.0000
8.0000
9.0000
10.000
TIME (SECONDS)
SAT, JAN 31 2009 15:40
"NE,NY,NB ANGLE"

2013 WINTER PEAK WITH DSM - DELIVER RESERVE
NS-NB=200; NB-NE=500; CBX=790; ONI=1015 ONS=704
SLG FAULT ON LINGAN BREAKER 88S7211
TRIPS LINGAN 3 AND 4 IN 4 CYCLES
FILE: d04-88s721_1ph-2013WP-DSM-NS-200.out
CHNL# 59: [POWR199169 [TUFTCV3 14.400] [3]]
CHNL# 56: [POWR199086 [TRENTON613.800] [6]]
CHNL# 55: [POWR199085 [TRENTN5 13.800] [5]]
CHNL# 54: [POWR199061 [TMP1 STO13.800] [1]]
CHNL# 52: [POWR199043 [ACONIG1 20.000] [1]]
CHNL# 50: [POWR199001 [LINGAN1 14.400] [1]]
2.5000
1.0000
-1.500
0.0
1.0000
2.0000
3.0000
4.0000
5.0000
6.0000
7.0000
8.0000
9.0000
10.000
TIME (SECONDS)
SAT, JAN 31 2009 15:40
NS MW

2013 WINTER PEAK WITH DSM - DELIVER RESERVE
NS-NB=200; NB-NE=500; CBX=790; ONI=1015 ONS=704
SLG FAULT ON LINGAN BREAKER 88S7211
TRIPS LINGAN 3 AND 4 IN 4 CYCLES
FILE: d04-88s721_1ph-2013WP-DSM-NS-200.out
CHNL# 49: [POWER190472 [BLLDNG2 19.000] [1]]
CHNL# 45: [POWER190456 [LEPRG1 26.000] [1]]
CHNL# 44: [POWER190450 [MACTG1 13.800] [1]]
CHNL# 42: [POWER126652 [RAV 3 22.000] [1]]
CHNL# 41: [POWER101063 [MYST G7 22.000] [1]]
CHNL# 40: [POWER100060 [MIS GT1 18.000] [1]]
5.0000
9.0000
4.0000
0.0
1.0000
6.5000
7.0000
2.0000
1.0000
2.0000
3.0000
4.0000
5.0000
6.0000
7.0000
8.0000
9.0000
10.000
TIME (SECONDS)
SAT, JAN 31 2009 15:40
"NE,NY,NB POWER"

2013 WINTER PEAK WITH DSM - DELIVER RESERVE
NS-NB=200; NB-NE=500; CBX=790; ONI=1015 ONS=704
SLG FAULT ON LINGAN BREAKER 88S7211
TRIPS LINGAN 3 AND 4 IN 4 CYCLES
FILE: d04-88s721_1ph-2013WP-DSM-NS-200.out
CHNL# 119: [VARS IR141-DIGBY]
CHNL# 118: [VARS IR137-STATIA]
CHNL# 117: [VARS IR114-GLENDHU]
CHNL# 116: [VARS IR84-DALHOUSIE]
CHNL# 115: [VARS IR82_NUTTBY]
CHNL# 114: [VARS IR45_AMHERST]
0.50000
-0.5000
0.0
1.0000
2.0000
3.0000
4.0000
5.0000
6.0000
7.0000
8.0000
9.0000
10.000
TIME (SECONDS)
SAT, JAN 31 2009 15:40
NS WIND MV

2013 WINTER PEAK WITH DSM - DELIVER RESERVE
NS-NB=200; NB-NE=500; CBX=790; ONI=1015 ONS=704
SLG FAULT ON LINGAN BREAKER 88S7211
TRIPS LINGAN 3 AND 4 IN 4 CYCLES
FILE: d04-88s721_1ph-2013WP-DSM-NS-200.out
CHNL# 79: [POWER IR141-DIGBY]
CHNL# 78: [POWER IR137-STATIA]
CHNL# 77: [POWER IR114-GLENDHU]
CHNL# 76: [POWER IR84-DALHOUSIE]
CHNL# 75: [POWER IR82_NUTTBY]
CHNL# 74: [POWER IR45_AMHERST]
1.0000
0.0
0.0
1.0000
2.0000
3.0000
4.0000
5.0000
6.0000
7.0000
8.0000
9.0000
10.000
TIME (SECONDS)
SAT, JAN 31 2009 15:40
NS WIND MW

2013 WINTER PEAK WITH DSM - DELIVER RESERVE
NS-NB=200; NB-NE=500; CBX=790; ONI=1015 ONS=704
SLG FAULT ON LINGAN BREAKER 88S7211
TRIPS LINGAN 3 AND 4 IN 4 CYCLES
FILE: d04-88s721_1ph-2013WP-DSM-NS-200.out
CHNL# 133: [VOLT199125 [ONSLOW 345.00]]
CHNL# 132: [VOLT199120 [HOPEWELL345.00]]
CHNL# 131: [VOLT199045 [WOODBINE345.00]]
CHNL# 130: [VOLT190320 [SALBRY 345.00]]
CHNL# 128: [VOLT190004 [KESWICK 345.00]]
CHNL# 127: [VOLT 70002 [ORRINGTN345.00]]
1.1000
0.90000
0.0
1.0000
2.0000
3.0000
4.0000
5.0000
6.0000
7.0000
8.0000
9.0000
10.000
TIME (SECONDS)
SAT, JAN 31 2009 15:40
"345KV VOLTAGE"

2013 WINTER PEAK WITH DSM - DELIVER RESERVE
NS-NB=200; NB-NE=500; CBX=790; ONI=1015 ONS=704
SLG FAULT ON LINGAN BREAKER 88S7211
TRIPS LINGAN 3 AND 4 IN 4 CYCLES
FILE: d04-88s721_1ph-2013WP-DSM-NS-200.out
CHNL# 125: 60*(1+[FREQ199125 [ONSLOW 345.00]])
CHNL# 124: 60*(1+[FREQ199120 [HOPEWELL345.00]])
CHNL# 123: 60*(1+[FREQ199045 [WOODBINE345.00]])
CHNL# 122: 60*(1+[FREQ190320 [SALBRY 345.00]])
CHNL# 121: 60*(1+[FREQ190197 [C.COVE 345.00]])
CHNL# 120: 60*(1+[FREQ 70002 [ORRINGTN345.00]])
60.500
59.500
0.0
1.0000
2.0000
3.0000
4.0000
5.0000
6.0000
7.0000
8.0000
9.0000
10.000
TIME (SECONDS)
SAT, JAN 31 2009 15:40
FREQUENCY HZ

2013 WINTER PEAK WITH DSM - DELIVER RESERVE
NS-NB=200; NB-NE=500; CBX=790; ONI=1015 ONS=704
SLG FAULT ON LINGAN BREAKER 88S7211
TRIPS LINGAN 3 AND 4 IN 4 CYCLES
FILE: d04-88s721_1ph-2013WP-DSM-NS-200.out
CHNL# 146: [VOLT199280 [TUSKET A138.00]]
CHNL# 145: [VOLT199193 [HHWAS 138.00]]
CHNL# 144: [VOLT199165 [TUFTCOVE138.00]]
CHNL# 143: [VOLT199135 [SPRNGHILL138.00]]
CHNL# 142: [VOLT199090 [50N-TREN138.00]]
CHNL# 141: [VOLT199051 [HASTINGS138.00]]
1.2000
0.70000
0.0
1.0000
2.0000
3.0000
4.0000
5.0000
6.0000
7.0000
8.0000
9.0000
10.000
TIME (SECONDS)
SAT, JAN 31 2009 15:40
138KV BUS VOLTS

2013 WINTER PEAK WITH DSM - DELIVER RESERVE
NS-NB=200; NB-NE=500; CBX=790; ONI=1015 ONS=704
SLG FAULT ON LINGAN BREAKER 88S7211
TRIPS LINGAN 3 AND 4 IN 4 CYCLES
FILE: d04-88s721_1ph-2013WP-DSM-NS-200.out
CHNL# 140: [VOLT199240 [BWATER A230.00]]
CHNL# 139: [VOLT199200 [BRUSHY 230.00]]
CHNL# 138: [VOLT199130 [ONSLOW 230.00]]
CHNL# 137: [VOLT199050 [HASTINGS230.00]]
CHNL# 136: [VOLT199044 [PT.ACONI230.00]]
CHNL# 135: [VOLT199000 [LINGAN 230.00]]
1.2000
0.70000
0.0
1.0000
2.0000
3.0000
4.0000
5.0000
6.0000
7.0000
8.0000
9.0000
10.000
TIME (SECONDS)
SAT, JAN 31 2009 15:40
230KV BUS VOLTS

2013 WINTER PEAK WITH DSM - DELIVER RESERVE
NS-NB=200; NB-NE=500; CBX=790; ONI=1015 ONS=704
SLG FAULT ON LINGAN BREAKER 88S7211
TRIPS LINGAN 3 AND 4 IN 4 CYCLES
FILE: d04-88s721_1ph-2013WP-DSM-NS-200.out
CHNL# 217: [L6513NWV]
CHNL# 215: [L6503MVI]
CHNL# 197: [L8003MVI]
CHNL# 195: [L8004MVI]
CHNL# 193: [L8001MVI]
CHNL# 221: [L3001MVI]
250.00
-250.0
500.00
0.0
1000.0
-1000.
TIME (SECONDS)
SAT, JAN 31 2009 15:40
LINE FLOW MW

2013 WINTER PEAK WITH DSM - DELIVER RESERVE
NS-NB=200; NB-NE=500; CBX=790; ONI=1015 ONS=704
SLG FAULT ON LINGAN BREAKER 88S7211
TRIPS LINGAN 3 AND 4 IN 4 CYCLES
FILE: d04-88s721_1ph-2013WP-DSM-NS-200.out
CHNL# 154: [IR141-DIGBYH69.0 VOLTS]
CHNL# 153: [IR137-STATIG25.0 VOLTS]
CHNL# 152: [IR114-GLENDH138.0 VOLTS]
CHNL# 151: [IR84-DALHOHV230.0 VOLTS]
CHNL# 150: [IR82 NUTBHV69.0 VOLTS]
CHNL# 149: [IR45 AMHERTP138.0 VOLTS]
1.2000
0.70000
0.0
1.0000
2.0000
3.0000
4.0000
5.0000
6.0000
7.0000
8.0000
9.0000
10.000
TIME (SECONDS)
SAT, JAN 31 2009 15:40
WIND BUS VOLTS

2013 WINTER PEAK WITH DSM - DELIVER RESERVE
NS-NB=200; NB-NE=500; CBX=790; ONI=1015 ONS=704
SLG FAULT ON ONSLOW BREAKER 1N600
CLEARS ONSLOW 138KV AND RADIAL LINES
FILE: d05-1n600_1ph-2013WP-DSM-NS-200.out
CHNL#S 20.4: [ANGL199169 [TUFTCV3 14.400] [3] [ANGL156661 [DARL G1 22.000] [1
CHNL#S 17.4: [ANGL199086 [TRENTON613.800] [6][ANGL156661 [DARL G1 22.000] [1
CHNL#S 16.4: [ANGL199085 [TRENTN5 13.800] [5][ANGL156661 [DARL G1 22.000] [1
CHNL#S 15.4: [ANGL199061 [TMP1 STO13.800] [1][ANGL156661 [DARL G1 22.000] [1
CHNL#S 13.4: [ANGL199043 [ACONIG1 20.000] [1][ANGL156661 [DARL G1 22.000] [1
CHNL#S 11.4: [ANGL199001 [LINGAN1 14.400] [1][ANGL156661 [DARL G1 22.000] [1
100.00
-100.0
0.0
1.0000
2.0000
3.0000
4.0000
5.0000
6.0000
7.0000
8.0000
9.0000
10.000
TIME (SECONDS)
SAT, JAN 31 2009 15:40
NS ANGLE

2013 WINTER PEAK WITH DSM - DELIVER RESERVE
NS-NB=200; NB-NE=500; CBX=790; ONI=1015 ONS=704
SLG FAULT ON ONSLOW BREAKER 1N600
CLEARS ONSLOW 138KV AND RADIAL LINES
FILE: d05-1n600_1ph-2013WP-DSM-NS-200.out
CHNL#S 10.4: [ANGL190472 [BLLDNG2 19.000] [1][ANGL156661 [DARL G1 22.000] [1
CHNL#S 6.4: [ANGL190456 [LEPRG1 26.000] [1][ANGL156661 [DARL G1 22.000] [1
CHNL#S 5.4: [ANGL190450 [MACTG1 13.800] [1][ANGL156661 [DARL G1 22.000] [1
CHNL#S 3.4: [ANGL126652 [RAV 3 22.000] [1][ANGL156661 [DARL G1 22.000] [1
CHNL#S 2.4: [ANGL101063 [MYST G7 22.000] [1][ANGL156661 [DARL G1 22.000] [1
CHNL#S 1.4: [ANGL100060 [MIS GT1 18.000] [1][ANGL156661 [DARL G1 22.000] [1
100.00
-100.0
0.0
1.0000
2.0000
3.0000
4.0000
5.0000
6.0000
7.0000
8.0000
9.0000
10.000
TIME (SECONDS)
SAT, JAN 31 2009 15:40
"NE,NY,NB ANGLE"

2013 WINTER PEAK WITH DSM - DELIVER RESERVE
NS-NB=200; NB-NE=500; CBX=790; ONI=1015 ONS=704
SLG FAULT ON ONSLOW BREAKER 1N600
CLEARS ONSLOW 138KV AND RADIAL LINES
FILE: d05-1n600_1ph-2013WP-DSM-NS-200.out
CHNL# 49: [POWER190472 [BLLDNG2 19.000] [1]
CHNL# 45: [POWER190456 [LEPRG1 26.000] [1]
CHNL# 44: [POWER190450 [MACTG1 13.800] [1]
CHNL# 42: [POWER126652 [RAV 3 22.000] [1]
CHNL# 41: [POWER101063 [MYST G7 22.000] [1]
CHNL# 40: [POWER100060 [MIS GT1 18.000] [1]
5.0000
9.0000
5.0000
5.0000
6.5000
7.0000
4.0000
0.0
1.0000
2.0000
3.0000
4.0000
5.0000
6.0000
7.0000
8.0000
9.0000
10.000
TIME (SECONDS)
SAT, JAN 31 2009 15:40
"NE,NY,NB POWER"

2013 WINTER PEAK WITH DSM - DELIVER RESERVE
NS-NB=200; NB-NE=500; CBX=790; ONI=1015 ONS=704
SLG FAULT ON ONSLOW BREAKER 1N600
CLEARS ONSLOW 138KV AND RADIAL LINES
FILE: d05-1n600_1ph-2013WP-DSM-NS-200.out
CHNL# 59: [POWER199169 [TUFTCV3 14.400] [3]
CHNL# 56: [POWER199086 [TRENTON613.800] [6]
CHNL# 55: [POWER199085 [TRENTN5 13.800] [5]
CHNL# 54: [POWER199061 [TMP1 STO13.800] [1]
CHNL# 52: [POWER199043 [ACONIG1 20.000] [1]
CHNL# 50: [POWER199001 [LINGAN1 14.400] [1]
2.5000
2.5000
2.5000
1.0000
2.5000
2.5000
0.0
-1.500
0.0
0.0
1.0000
2.0000
3.0000
4.0000
5.0000
6.0000
7.0000
8.0000
9.0000
10.000
TIME (SECONDS)
SAT, JAN 31 2009 15:40
NS MW

2013 WINTER PEAK WITH DSM - DELIVER RESERVE
NS-NB=200; NB-NE=500; CBX=790; ONI=1015 ONS=704
SLG FAULT ON ONSLOW BREAKER 1N600
CLEARS ONSLOW 138KV AND RADIAL LINES
FILE: d05-1n600_1ph-2013WP-DSM-NS-200.out
CHNL# 119: [VARS IR141-DIGBY]
CHNL# 118: [VARS IR137-STATIA]
CHNL# 117: [VARS IR114-GLENDHU]
CHNL# 116: [VARS IR84-DALHOUSIE]
CHNL# 115: [VARS IR82_NUTTBY]
CHNL# 114: [VARS IR45_AMHERST]
0.50000
-0.5000
0.0
1.0000
2.0000
3.0000
4.0000
5.0000
6.0000
7.0000
8.0000
9.0000
10.000
TIME (SECONDS)
SAT, JAN 31 2009 15:41
NS WIND MV

2013 WINTER PEAK WITH DSM - DELIVER RESERVE
NS-NB=200; NB-NE=500; CBX=790; ONI=1015 ONS=704
SLG FAULT ON ONSLOW BREAKER 1N600
CLEARS ONSLOW 138KV AND RADIAL LINES
FILE: d05-1n600_1ph-2013WP-DSM-NS-200.out
CHNL# 79: [POWER IR141-DIGBY]
CHNL# 78: [POWER IR137-STATIA]
CHNL# 77: [POWER IR114-GLENDHU]
CHNL# 76: [POWER IR84-DALHOUSIE]
CHNL# 75: [POWER IR82_NUTTBY]
CHNL# 74: [POWER IR45_AMHERST]
1.0000
0.0
1.0000
2.0000
3.0000
4.0000
5.0000
6.0000
7.0000
8.0000
9.0000
10.000
TIME (SECONDS)
SAT, JAN 31 2009 15:40
NS WIND MW

2013 WINTER PEAK WITH DSM - DELIVER RESERVE
NS-NB=200; NB-NE=500; CBX=790; ONI=1015 ONS=704
SLG FAULT ON ONSLOW BREAKER 1N600
CLEARS ONSLOW 138KV AND RADIAL LINES
FILE: d05-1n600_1ph-2013WP-DSM-NS-200.out
CHNL# 133: [VOLT199125 [ONSLOW 345.00]]
CHNL# 132: [VOLT199120 [HOPEWELL 345.00]]
CHNL# 131: [VOLT199045 [WOODBINE345.00]]
CHNL# 130: [VOLT190320 [SALBRY 345.00]]
CHNL# 128: [VOLT190004 [KESWICK 345.00]]
CHNL# 127: [VOLT 70002 [ORRINGTN345.00]]
1.1000
0.90000
0.0
1.0000
2.0000
3.0000
4.0000
5.0000
6.0000
7.0000
8.0000
9.0000
10.000
TIME (SECONDS)
SAT, JAN 31 2009 15:41
"345KV VOLTAGE"

2013 WINTER PEAK WITH DSM - DELIVER RESERVE
NS-NB=200; NB-NE=500; CBX=790; ONI=1015 ONS=704
SLG FAULT ON ONSLOW BREAKER 1N600
CLEARS ONSLOW 138KV AND RADIAL LINES
FILE: d05-1n600_1ph-2013WP-DSM-NS-200.out
CHNL# 125: 60*(1+[FREQ199125 [ONSLOW 345.00]])
CHNL# 124: 60*(1+[FREQ199120 [HOPEWELL 345.00]])
CHNL# 123: 60*(1+[FREQ199045 [WOODBINE345.00]])
CHNL# 122: 60*(1+[FREQ190320 [SALBRY 345.00]])
CHNL# 121: 60*(1+[FREQ190197 [C.COVE 345.00]])
CHNL# 120: 60*(1+[FREQ 70002 [ORRINGTN345.00]])
60.500
59.500
0.0
1.0000
2.0000
3.0000
4.0000
5.0000
6.0000
7.0000
8.0000
9.0000
10.000
TIME (SECONDS)
SAT, JAN 31 2009 15:41
FREQUENCY HZ

2013 WINTER PEAK WITH DSM - DELIVER RESERVE
NS-NB=200; NB-NE=500; CBX=790; ONI=1015 ONS=704
SLG FAULT ON ONSLOW BREAKER 1N600
CLEARS ONSLOW 138KV AND RADIAL LINES
FILE: d05-1n600_1ph-2013WP-DSM-NS-200.out
CHNL# 146: [VOLT199280 [TUSKET A138.00]]
CHNL# 145: [VOLT199193 [HHWAS 138.00]]
CHNL# 144: [VOLT199165 [TUFTCOVE138.00]]
CHNL# 143: [VOLT199138 [SPRNGHILL138.00]]
CHNL# 142: [VOLT199090 [SON-TREN138.00]]
CHNL# 141: [VOLT199051 [HASTINGS138.00]]
1.2000
0.70000
0.0
1.0000
2.0000
3.0000
4.0000
5.0000
6.0000
7.0000
8.0000
9.0000
10.000
TIME (SECONDS)
SAT, JAN 31 2009 15:41
138KV BUS VOLTS

2013 WINTER PEAK WITH DSM - DELIVER RESERVE
NS-NB=200; NB-NE=500; CBX=790; ONI=1015 ONS=704
SLG FAULT ON ONSLOW BREAKER 1N600
CLEARS ONSLOW 138KV AND RADIAL LINES
FILE: d05-1n600_1ph-2013WP-DSM-NS-200.out
CHNL# 140: [VOLT199240 [BWATER A230.00]]
CHNL# 139: [VOLT199200 [BRUSHY 230.00]]
CHNL# 138: [VOLT199130 [ONSLOW 230.00]]
CHNL# 137: [VOLT199050 [HASTINGS230.00]]
CHNL# 136: [VOLT199044 [PT.ACONI230.00]]
CHNL# 135: [VOLT199000 [LINGAN 230.00]]
1.2000
0.70000
0.0
1.0000
2.0000
3.0000
4.0000
5.0000
6.0000
7.0000
8.0000
9.0000
10.000
TIME (SECONDS)
SAT, JAN 31 2009 15:41
230KV BUS VOLTS

2013 WINTER PEAK WITH DSM - DELIVER RESERVE
NS-NB=200; NB-NE=500; CBX=790; ONI=1015 ONS=704
SLG FAULT ON ONSLOW BREAKER 1N600
CLEARS ONSLOW 138KV AND RADIAL LINES
FILE: d05-1n600_1ph-2013WP-DSM-NS-200.out
CHNL# 217: [L6533NMW]
CHNL# 215: [L6503MW]
CHNL# 197: [L8003MW]
CHNL# 195: [L8004MW]
CHNL# 193: [L8001MW]
CHNL# 221: [L3001MW]
250.00
-250.0
500.00
0.0
1000.0
-1000.
0.0
1.0000
2.0000
3.0000
4.0000
5.0000
6.0000
7.0000
8.0000
9.0000
10.000
TIME (SECONDS)
SAT, JAN 31 2009 15:41
LINE FLOW MW

2013 WINTER PEAK WITH DSM - DELIVER RESERVE
NS-NB=200; NB-NE=500; CBX=790; ONI=1015 ONS=704
SLG FAULT ON ONSLOW BREAKER 1N600
CLEARS ONSLOW 138KV AND RADIAL LINES
FILE: d05-1n600_1ph-2013WP-DSM-NS-200.out
CHNL# 154: [IR141-DIGBYH69.0 VOLTS]
CHNL# 153: [IR137-STATIG25.0 VOLTS]
CHNL# 152: [IR114-GLENDH138.0 VOLTS]
CHNL# 151: [IR84-DALHOHV230.0 VOLTS]
CHNL# 150: [IR82-NUTBHV69.0 VOLTS]
CHNL# 149: [IR45-AMHERTP138.0 VOLTS]
1.2000
0.70000
0.0
1.0000
2.0000
3.0000
4.0000
5.0000
6.0000
7.0000
8.0000
9.0000
10.000
TIME (SECONDS)
SAT, JAN 31 2009 15:41
WIND BUS VOLTS

2013 WINTER PEAK WITH DSM - DELIVER RESERVE
NS-NB=200; NB-NE=500; CBX=790; ONI=1015 ONS=704
LOSE TUFTS COVE 3
NO FAULT
FILE: e02-lose-tc3-2013WP-DSM-NS-200.out
CHNL# 20: [ANGL199169 [TUFTCV3 14.400] [3]] [ANGL156661 [DARL G1 22.000] [1
CHNL# 17: [ANGL199086 [TRENTON613.800] [6]] [ANGL156661 [DARL G1 22.000] [1
CHNL# 16: [ANGL199085 [TRENTN5 13.800] [5]] [ANGL156661 [DARL G1 22.000] [1
CHNL# 15: [ANGL199061 [TMP1 STO13.800] [1]] [ANGL156661 [DARL G1 22.000] [1
CHNL# 13: [ANGL199043 [ACONIG1 20.000] [1]] [ANGL156661 [DARL G1 22.000] [1
CHNL# 11: [ANGL199001 [LINGAN1 14.400] [1]] [ANGL156661 [DARL G1 22.000] [1
100.00
-100.0
0.0
1.0000
2.0000
3.0000
4.0000
5.0000
6.0000
7.0000
8.0000
9.0000
10.000
TIME (SECONDS)
SAT, JAN 31 2009 15:41
NS ANGLE

2013 WINTER PEAK WITH DSM - DELIVER RESERVE
NS-NB=200; NB-NE=500; CBX=790; ONI=1015 ONS=704
LOSE TUFTS COVE 3
NO FAULT
FILE: e02-lose-tc3-2013WP-DSM-NS-200.out
CHNL# 10: [ANGL190472 [BLLDNG2 19.000] [1]] [ANGL156661 [DARL G1 22.000] [1
CHNL# 6: [ANGL190456 [LEPRG1 26.000] [1]] [ANGL156661 [DARL G1 22.000] [1
CHNL# 5: [ANGL190450 [MACTG1 13.800] [1]] [ANGL156661 [DARL G1 22.000] [1
CHNL# 3: [ANGL126652 [RAV 3 22.000] [1]] [ANGL156661 [DARL G1 22.000] [1
CHNL# 2: [ANGL101063 [MYST G7 22.000] [1]] [ANGL156661 [DARL G1 22.000] [1
CHNL# 1: [ANGL100060 [MIS GT1 18.000] [1]] [ANGL156661 [DARL G1 22.000] [1
100.00
-100.0
0.0
1.0000
2.0000
3.0000
4.0000
5.0000
6.0000
7.0000
8.0000
9.0000
10.000
TIME (SECONDS)
SAT, JAN 31 2009 15:41
"NE,NY,NB ANGLE"

2013 WINTER PEAK WITH DSM - DELIVER RESERVE
NS-NB=200; NB-NE=500; CBX=790; ONI=1015 ONS=704
LOSE TUFTS COVE 3
NO FAULT
FILE: e02-lose-tc3-2013WP-DSM-NS-200.out
CHNL# 59: [POWR199169 [TUFTCV3 14.400] [3]]
CHNL# 56: [POWR199086 [TRENTON613.800] [6]]
CHNL# 55: [POWR199085 [TRENTN5 13.800] [5]]
CHNL# 54: [POWR199061 [TMP1 STO13.800] [1]]
CHNL# 52: [POWR199043 [ACONIG1 20.000] [1]]
CHNL# 50: [POWR199001 [LINGAN1 14.400] [1]]
2.5000
0.0
-1.500
1.0000
2.0000
3.0000
4.0000
5.0000
6.0000
7.0000
8.0000
9.0000
10.000
TIME (SECONDS)
SAT, JAN 31 2009 15:41
NS MW

2013 WINTER PEAK WITH DSM - DELIVER RESERVE
NS-NB=200; NB-NE=500; CBX=790; ONI=1015 ONS=704
LOSE TUFTS COVE 3
NO FAULT
FILE: e02-lose-tc3-2013WP-DSM-NS-200.out
CHNL# 49: [POWER190472 [BLLDNG2 19.000] [1]]
CHNL# 45: [POWER190456 [LEPRG1 26.000] [1]]
CHNL# 44: [POWER190450 [MACTG1 13.800] [1]]
CHNL# 42: [POWER126652 [RAV 3 22.000] [1]]
CHNL# 41: [POWER101063 [MYST G7 22.000] [1]]
CHNL# 40: [POWER100060 [MIS GT1 18.000] [1]]
5.0000
0.0
4.0000
1.0000
2.0000
3.0000
4.0000
5.0000
6.0000
7.0000
8.0000
9.0000
10.000
TIME (SECONDS)
SAT, JAN 31 2009 15:41
"NE,NY,NB POWER"

2013 WINTER PEAK WITH DSM - DELIVER RESERVE
NS-NB=200; NB-NE=500; CBX=790; ONI=1015 ONS=704
LOSE TUFTS COVE 3
NO FAULT
FILE: e02-lose-tc3-2013WP-DSM-NS-200.out
CHNL# 119: [VARS IR141-DIGBY]
CHNL# 118: [VARS IR137-STATIA]
CHNL# 117: [VARS IR114-GLENDHU]
CHNL# 116: [VARS IR84-DALHOUSIE]
CHNL# 115: [VARS IR82_NUTTBY]
CHNL# 114: [VARS IR45_AMHERST]
0.50000
-0.5000
0.0
1.0000
2.0000
3.0000
4.0000
5.0000
6.0000
7.0000
8.0000
9.0000
10.000
TIME (SECONDS)
SAT, JAN 31 2009 15:41
NS WIND MV

2013 WINTER PEAK WITH DSM - DELIVER RESERVE
NS-NB=200; NB-NE=500; CBX=790; ONI=1015 ONS=704
LOSE TUFTS COVE 3
NO FAULT
FILE: e02-lose-tc3-2013WP-DSM-NS-200.out
CHNL# 79: [POWER IR141-DIGBY]
CHNL# 78: [POWER IR137-STATIA]
CHNL# 77: [POWER IR114-GLENDHU]
CHNL# 76: [POWER IR84-DALHOUSIE]
CHNL# 75: [POWER IR82_NUTTBY]
CHNL# 74: [POWER IR45_AMHERST]
1.0000
0.0
0.0
1.0000
2.0000
3.0000
4.0000
5.0000
6.0000
7.0000
8.0000
9.0000
10.000
TIME (SECONDS)
SAT, JAN 31 2009 15:41
NS WIND MW

2013 WINTER PEAK WITH DSM - DELIVER RESERVE
NS-NB=200; NB-NE=500; CBX=790; ONI=1015 ONS=704
LOSE TUFTS COVE 3
NO FAULT
FILE: e02-lose-tc3-2013WP-DSM-NS-200.out
CHNL# 133: [VOLT199125 [ONSLOW 345.00]]
CHNL# 132: [VOLT199120 [HOPEWELL 345.00]]
CHNL# 131: [VOLT199045 [WOODBINE345.00]]
CHNL# 130: [VOLT190320 [SALBRY 345.00]]
CHNL# 128: [VOLT190004 [KESWICK 345.00]]
CHNL# 127: [VOLT 70002 [ORRINGTN345.00]]
1.1000
0.90000
0.0
1.0000
2.0000
3.0000
4.0000
5.0000
6.0000
7.0000
8.0000
9.0000
10.000
TIME (SECONDS)
SAT, JAN 31 2009 15:41
"345KV VOLTAGE"

2013 WINTER PEAK WITH DSM - DELIVER RESERVE
NS-NB=200; NB-NE=500; CBX=790; ONI=1015 ONS=704
LOSE TUFTS COVE 3
NO FAULT
FILE: e02-lose-tc3-2013WP-DSM-NS-200.out
CHNL# 125: [60*(1+[FREQ199125 [ONSLOW 345.00]])]
CHNL# 124: [60*(1+[FREQ199120 [HOPEWELL 345.00]])]
CHNL# 123: [60*(1+[FREQ199045 [WOODBINE345.00]])]
CHNL# 122: [60*(1+[FREQ190320 [SALBRY 345.00]])]
CHNL# 121: [60*(1+[FREQ190197 [C.COVE 345.00]])]
CHNL# 120: [60*(1+[FREQ 70002 [ORRINGTN345.00]])]
60.500
59.500
0.0
1.0000
2.0000
3.0000
4.0000
5.0000
6.0000
7.0000
8.0000
9.0000
10.000
TIME (SECONDS)
SAT, JAN 31 2009 15:41
FREQUENCY HZ

2013 WINTER PEAK WITH DSM - DELIVER RESERVE
NS-NB=200; NB-NE=500; CBX=790; ONI=1015 ONS=704
LOSE TUFTS COVE 3
NO FAULT
FILE: e02-lose-tc3-2013WP-DSM-NS-200.out
CHNL# 145: [VOLT199193 [HHWAS_138.00]]
CHNL# 144: [VOLT199165 [TUFTCOVE138.00]]
CHNL# 143: [VOLT199138 [SPRNGHIL138.00]]
CHNL# 142: [VOLT199090 [SON-TREN138.00]]
CHNL# 141: [VOLT199051 [HASTINGS138.00]]
CHNL# 146: [VOLT199280 [TUSKET_A138.00]]
TIME (SECONDS)
SAT, JAN 31 2009 15:41
138KV BUS VOLTS

2013 WINTER PEAK WITH DSM - DELIVER RESERVE
NS-NB=200; NB-NE=500; CBX=790; ONI=1015 ONS=704
LOSE TUFTS COVE 3
NO FAULT
FILE: e02-lose-tc3-2013WP-DSM-NS-200.out
CHNL# 139: [VOLT199200 [BRUSHY_230.00]]
CHNL# 138: [VOLT199130 [ONSLOW_230.00]]
CHNL# 137: [VOLT199050 [HASTINGS230.00]]
CHNL# 136: [VOLT199044 [PT.ACONI230.00]]
CHNL# 135: [VOLT199000 [LINGAN_230.00]]
CHNL# 140: [VOLT199240 [BWATER_A230.00]]
TIME (SECONDS)
SAT, JAN 31 2009 15:41
230KV BUS VOLTS

2013 WINTER PEAK WITH DSM - DELIVER RESERVE
NS-NB=200; NB-NE=500; CBX=790; ONI=1015 ONS=704
LOSE TUFTS COVE 3
NO FAULT
FILE: e02-lose-tc3-2013WP-DSM-NS-200.out
CHNL# 197: [L8003MW1]
CHNL# 195: [L8004MW1]
CHNL# 193: [L8001MW1]
CHNL# 221: [L3001MW1]
CHNL# 215: [L6503MW1]
CHNL# 217: [L6533MW1]
TIME (SECONDS)
SAT, JAN 31 2009 15:41
LINE FLOW MW

2013 WINTER PEAK WITH DSM - DELIVER RESERVE
NS-NB=200; NB-NE=500; CBX=790; ONI=1015 ONS=704
LOSE TUFTS COVE 3
NO FAULT
FILE: e02-lose-tc3-2013WP-DSM-NS-200.out
CHNL# 152: [IR114-GLENDH138.0 VOLTS]
CHNL# 151: [IR84-DALHOHV230.0 VOLTS]
CHNL# 150: [IR82_NUTBHV69.0 VOLTS]
CHNL# 149: [IR45_AMHERTP138.0 VOLTS]
CHNL# 153: [IR137-STATIG25.0 VOLTS]
CHNL# 154: [IR141-DIGBYH69.0 VOLTS]
TIME (SECONDS)
SAT, JAN 31 2009 15:41
WIND BUS VOLTS

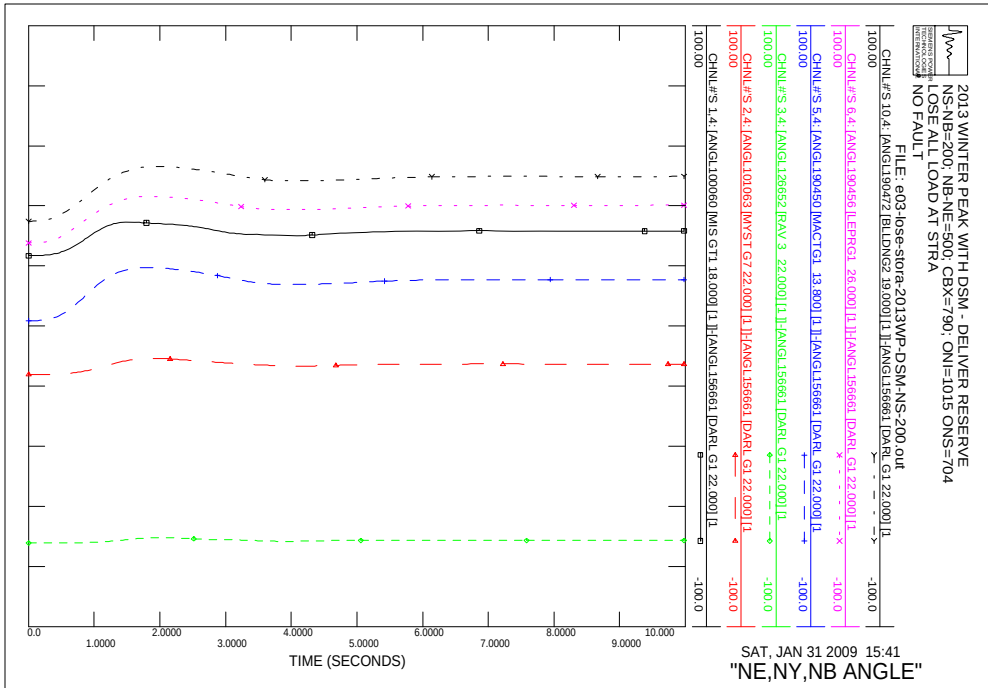
2013 WINTER PEAK WITH DSM - DELIVER RESERVE
NS-NB=200; NB-NE=500; CBX=790; ONI=1015 ONS=704
LOSE ALL LOAD AT STRA
NO FAULT
FILE: e03-lose-stora-2013WP-DSM-NS-200.out
CHNL#'S 10,4: [ANGL190472 [BLLDNG2 19.000] [1]]-[ANGL156661 [DARL G1 22.000] [1
CHNL#'S 6,4: [ANGL190456 [LEPRG1 26.000] [1]]-[ANGL156661 [DARL G1 22.000] [1
CHNL#'S 5,4: [ANGL190450 [MACTG1 13.800] [1]]-[ANGL156661 [DARL G1 22.000] [1
CHNL#'S 3,4: [ANGL126652 [RAV 3 22.000] [1]]-[ANGL156661 [DARL G1 22.000] [1
CHNL#'S 2,4: [ANGL101063 [MYST G7 22.000] [1]]-[ANGL156661 [DARL G1 22.000] [1
CHNL#'S 1,4: [ANGL100060 [MIS GT1 18.000] [1]]-[ANGL156661 [DARL G1 22.000] [1
100.00
-100.0
TIME (SECONDS)
SAT, JAN 31 2009 15:41
"NE,NY,NB ANGLE"

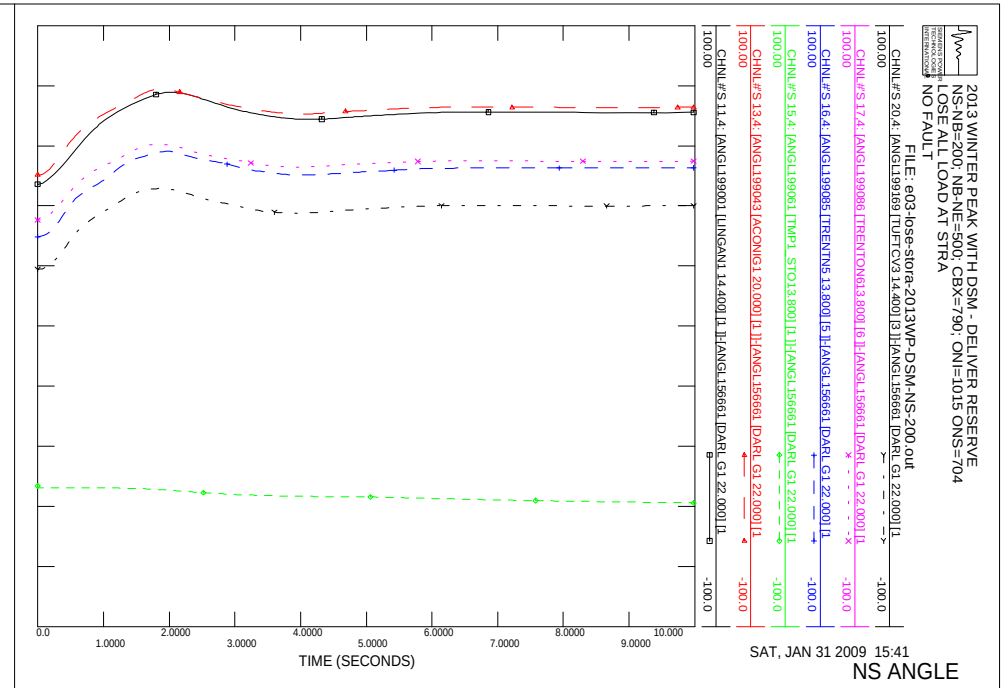
2013 WINTER PEAK WITH DSM - DELIVER RESERVE
NS-NB=200; NB-NE=500; CBX=790; ONI=1015 ONS=704
LOSE ALL LOAD AT STRA
NO FAULT
FILE: e03-lose-stora-2013WP-DSM-NS-200.out
CHNL#'S 20,4: [ANGL199169 [TUFTCV3 14.400] [3]]-[ANGL156661 [DARL G1 22.000] [1
CHNL#'S 17,4: [ANGL199086 [TRENTON613.800] [6]]-[ANGL156661 [DARL G1 22.000] [1
CHNL#'S 16,4: [ANGL199085 [TRENTN5 13.800] [5]]-[ANGL156661 [DARL G1 22.000] [1
CHNL#'S 15,4: [ANGL199061 [TMP1 STO13.800] [1]]-[ANGL156661 [DARL G1 22.000] [1
CHNL#'S 13,4: [ANGL199043 [ACONIG1 20.000] [1]]-[ANGL156661 [DARL G1 22.000] [1
CHNL#'S 11,4: [ANGL199001 [LINGAN1 14.400] [1]]-[ANGL156661 [DARL G1 22.000] [1
100.00
-100.0
TIME (SECONDS)
SAT, JAN 31 2009 15:41
NS ANGLE

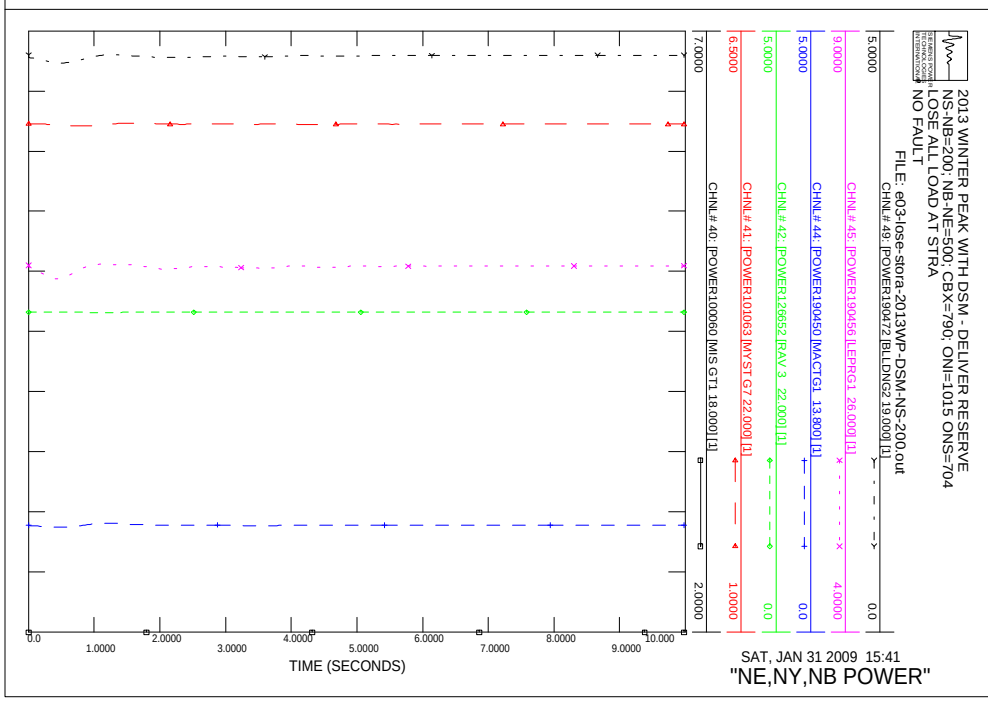
2013 WINTER PEAK WITH DSM - DELIVER RESERVE
NS-NB=200; NB-NE=500; CBX=790; ONI=1015 ONS=704
LOSE ALL LOAD AT STRA
NO FAULT
FILE: e03-lose-stora-2013WP-DSM-NS-200.out
CHNL# 49: [POWER190472 [BLLDNG2 19.000] [1]
CHNL# 45: [POWER190456 [LEPRG1 26.000] [1]
CHNL# 44: [POWER190450 [MACTG1 13.800] [1]
CHNL# 42: [POWER126652 [RAV 3 22.000] [1]
CHNL# 41: [POWER101063 [MYST G7 22.000] [1]
CHNL# 40: [POWER100060 [MIS GT1 18.000] [1]
5.0000
0.0
TIME (SECONDS)
SAT, JAN 31 2009 15:41
"NE,NY,NB POWER"

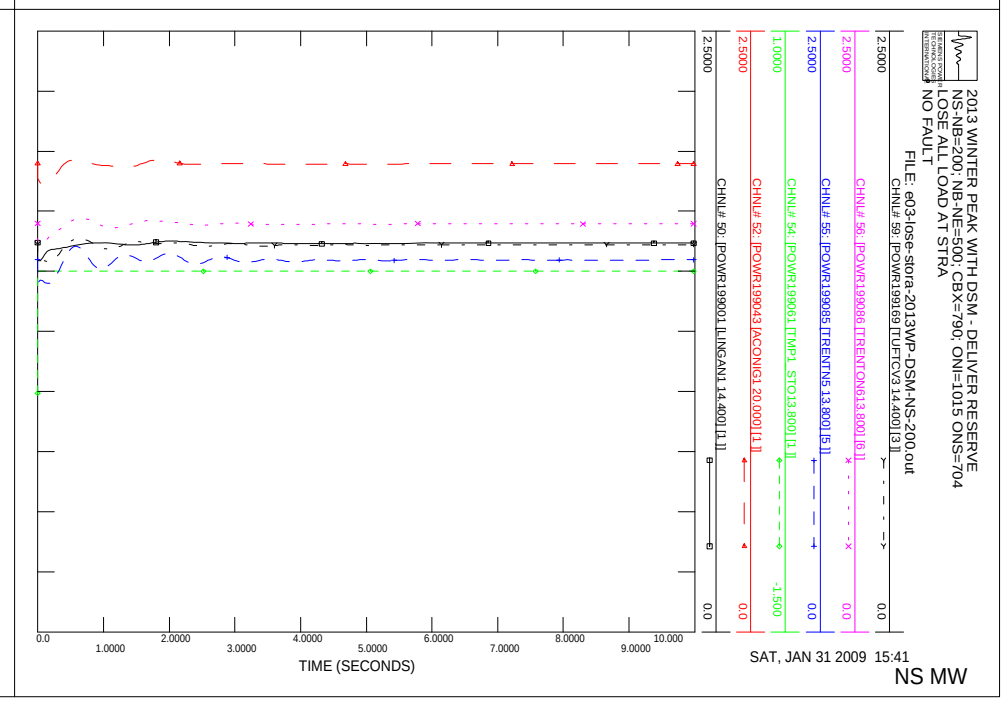
2013 WINTER PEAK WITH DSM - DELIVER RESERVE
NS-NB=200; NB-NE=500; CBX=790; ONI=1015 ONS=704
LOSE ALL LOAD AT STRA
NO FAULT
FILE: e03-lose-stora-2013WP-DSM-NS-200.out
CHNL# 59: [POWR199169 [TUFTCV3 14.400] [3]]
CHNL# 56: [POWR199086 [TRENTON613.800] [6]]
CHNL# 55: [POWR199085 [TRENTN5 13.800] [5]]
CHNL# 54: [POWR199061 [TMP1 STO13.800] [1]]
CHNL# 52: [POWR199043 [ACONIG1 20.000] [1]]
CHNL# 50: [POWR199001 [LINGAN1 14.400] [1]]
2.5000
0.0
TIME (SECONDS)
SAT, JAN 31 2009 15:41
NS MW

2013 WINTER PEAK WITH DSM - DELIVER RESERVE
NS-NB=200; NB-NE=500; CBX=790; ONI=1015 ONS=704
LOSE ALL LOAD AT STRA
NO FAULT
FILE: e03-lose-stora-2013WP-DSM-NS-200.out
CHNL# 119: [VARS IR141-DIGBY]
CHNL# 118: [VARS IR137-STATIA]
CHNL# 117: [VARS IR114-GLENDHU]
CHNL# 116: [VARS IR84-DALHOUSIE]
CHNL# 115: [VARS IR82_NUTTBY]
CHNL# 114: [VARS IR45_AMHERST]
0.50000
-0.5000
0.0
1.0000
2.0000
3.0000
4.0000
5.0000
6.0000
7.0000
8.0000
9.0000
10.000
TIME (SECONDS)
SAT, JAN 31 2009 15:41
NS WIND MV

2013 WINTER PEAK WITH DSM - DELIVER RESERVE
NS-NB=200; NB-NE=500; CBX=790; ONI=1015 ONS=704
LOSE ALL LOAD AT STRA
NO FAULT
FILE: e03-lose-stora-2013WP-DSM-NS-200.out
CHNL# 79: [POWER IR141-DIGBY]
CHNL# 78: [POWER IR137-STATIA]
CHNL# 77: [POWER IR114-GLENDHU]
CHNL# 76: [POWER IR84-DALHOUSIE]
CHNL# 75: [POWER IR82_NUTTBY]
CHNL# 74: [POWER IR45_AMHERST]
1.0000
0.0
0.0
1.0000
2.0000
3.0000
4.0000
5.0000
6.0000
7.0000
8.0000
9.0000
10.000
TIME (SECONDS)
SAT, JAN 31 2009 15:41
NS WIND MW

2013 WINTER PEAK WITH DSM - DELIVER RESERVE
NS-NB=200; NB-NE=500; CBX=790; ONI=1015 ONS=704
LOSE ALL LOAD AT STRA
NO FAULT
FILE: e03-lose-stora-2013WP-DSM-NS-200.out
CHNL# 133: [VOLT199125 IONSLOW 345.00]
CHNL# 132: [VOLT199120 [HOPEWELL345.00]
CHNL# 131: [VOLT199045 [WOODBINE345.00]]
CHNL# 130: [VOLT190320 [SALBRY 345.00]]
CHNL# 128: [VOLT190004 [KESWICK 345.00]]
CHNL# 127: [VOLT 70002 [ORRINGTN345.00]]
1.1000
0.90000
0.0
1.0000
2.0000
3.0000
4.0000
5.0000
6.0000
7.0000
8.0000
9.0000
10.000
TIME (SECONDS)
SAT, JAN 31 2009 15:41
"345KV VOLTAGE"

2013 WINTER PEAK WITH DSM - DELIVER RESERVE
NS-NB=200; NB-NE=500; CBX=790; ONI=1015 ONS=704
LOSE ALL LOAD AT STRA
NO FAULT
FILE: e03-lose-stora-2013WP-DSM-NS-200.out
CHNL# 125: [60*(1+[FREQ199125 [ONSLOW 345.00]])
CHNL# 124: [60*(1+[FREQ199120 [HOPEWELL345.00])
CHNL# 123: [60*(1+[FREQ199045 [WOODBINE345.00]])
CHNL# 122: [60*(1+[FREQ190320 [SALBRY 345.00])
CHNL# 121: [60*(1+[FREQ190197 [C.COVE 345.00]])
CHNL# 120: [60*(1+[FREQ 70002 [ORRINGTN345.00]])
60.500
59.500
0.0
1.0000
2.0000
3.0000
4.0000
5.0000
6.0000
7.0000
8.0000
9.0000
10.000
TIME (SECONDS)
SAT, JAN 31 2009 15:41
FREQUENCY HZ

2013 WINTER PEAK WITH DSM - DELIVER RESERVE
NS-NB=200; NB-NE=500; CBX=790; ONI=1015 ONS=704
LOSE ALL LOAD AT STRA
NO FAULT
FILE: e03-lose-stora-2013WP-DSM-NS-200.out
CHNL# 146: [VOLT199280 [TUSKET A138.00]] 1.2000 0.70000
CHNL# 145: [VOLT199193 [HHWAS 138.00]] 1.2000 0.70000
CHNL# 144: [VOLT199165 [TUFTCOVE138.00]] 1.2000 0.70000
CHNL# 143: [VOLT199138 [SPRNGHIL138.00]] 1.2000 0.70000
CHNL# 142: [VOLT199090 [50N-TREN138.00]] 1.2000 0.70000
CHNL# 141: [VOLT199051 [HASTINGS138.00]] 1.2000 0.70000
0.0 1.0000 2.0000 3.0000 4.0000 5.0000 6.0000 7.0000 8.0000 9.0000 10.000
TIME (SECONDS)
SAT, JAN 31 2009 15:41
138KV BUS VOLTS

2013 WINTER PEAK WITH DSM - DELIVER RESERVE
NS-NB=200; NB-NE=500; CBX=790; ONI=1015 ONS=704
LOSE ALL LOAD AT STRA
NO FAULT
FILE: e03-lose-stora-2013WP-DSM-NS-200.out
CHNL# 140: [VOLT199240 [BWATER A230.00]] 1.2000 0.70000
CHNL# 139: [VOLT199200 [BRUSHY 230.00]] 1.2000 0.70000
CHNL# 138: [VOLT199130 [ONSLOW 230.00]] 1.2000 0.70000
CHNL# 137: [VOLT199050 [HASTINGS230.00]] 1.2000 0.70000
CHNL# 136: [VOLT199044 [PT.ACONI230.00]] 1.2000 0.70000
CHNL# 135: [VOLT199000 [LINGAN 230.00]] 1.2000 0.70000
0.0 1.0000 2.0000 3.0000 4.0000 5.0000 6.0000 7.0000 8.0000 9.0000 10.000
TIME (SECONDS)
SAT, JAN 31 2009 15:41
230KV BUS VOLTS

2013 WINTER PEAK WITH DSM - DELIVER RESERVE
NS-NB=200; NB-NE=500; CBX=790; ONI=1015 ONS=704
LOSE ALL LOAD AT STRA
NO FAULT
FILE: e03-lose-stora-2013WP-DSM-NS-200.out
CHNL# 217: [L6513MW] 250.00 -250.0
CHNL# 215: [L6503MW] 500.00 0.0
CHNL# 197: [L8003MW] 1000.0 0.0
CHNL# 195: [L8004MW] 1000.0 0.0
CHNL# 193: [L8001MW] 1000.0 -1000.
CHNL# 221: [L3001MW] 1000.0 -1000.
0.0 1.0000 2.0000 3.0000 4.0000 5.0000 6.0000 7.0000 8.0000 9.0000 10.000
TIME (SECONDS)
SAT, JAN 31 2009 15:41
LINE FLOW MW

2013 WINTER PEAK WITH DSM - DELIVER RESERVE
NS-NB=200; NB-NE=500; CBX=790; ONI=1015 ONS=704
LOSE ALL LOAD AT STRA
NO FAULT
FILE: e03-lose-stora-2013WP-DSM-NS-200.out
CHNL# 154: [IR141-DIGBYH69.0 VOLTS] 1.2000 0.70000
CHNL# 153: [IR137-STATIG25.0 VOLTS] 1.2000 0.70000
CHNL# 152: [IR114-GLENDH138.0 VOLTS] 1.2000 0.70000
CHNL# 151: [IR84-DALHOHV230.0 VOLTS] 1.2000 0.70000
CHNL# 150: [IR82_NUTBHV69.0 VOLTS] 1.2000 0.70000
CHNL# 149: [IR45_AMHERTP138.0 VOLTS] 1.2000 0.70000
0.0 1.0000 2.0000 3.0000 4.0000 5.0000 6.0000 7.0000 8.0000 9.0000 10.000
TIME (SECONDS)
SAT, JAN 31 2009 15:41
WIND BUS VOLTS

2013 WINTER PEAK WITH DSM - DELIVER RESERVE
NS-NB=200; NB-NE=500; CBX=790; ONI=1015 ONS=704
3PH FAULT ON 138KV BUS B1 AT 79N HOPEWELL
SPS TRIPS 2 LINGAN UNITS
FILE: a101ss-b1_3ph_79n_mrecl-2013WP-DSM-NS-200.out
CHNL#S 20:4 [ANGL199169 [TUFTCV3 14.400] [3]] [ANGL156661 [DARL G1 22.000] [1
CHNL#S 17:4 [ANGL199086 [TRENTON613.800] [6]] [ANGL156661 [DARL G1 22.000] [1
CHNL#S 16:4 [ANGL199085 [TRENTN5 13.800] [5]] [ANGL156661 [DARL G1 22.000] [1
CHNL#S 15:4 [ANGL199061 [TMP1 STO13.800] [1]] [ANGL156661 [DARL G1 22.000] [1
CHNL#S 13:4 [ANGL199043 [ACONIG1 20.000] [1]] [ANGL156661 [DARL G1 22.000] [1
CHNL#S 11:4 [ANGL199001 [LINGAN1 14.400] [1]] [ANGL156661 [DARL G1 22.000] [1
100.00
-100.0
0.0
1.0000
2.0000
3.0000
4.0000
5.0000
6.0000
7.0000
8.0000
9.0000
10.000
TIME (SECONDS)
SAT, JAN 31 2009 15:41
NS ANGLE

2013 WINTER PEAK WITH DSM - DELIVER RESERVE
NS-NB=200; NB-NE=500; CBX=790; ONI=1015 ONS=704
3PH FAULT ON 138KV BUS B1 AT 79N HOPEWELL
SPS TRIPS 2 LINGAN UNITS
FILE: a101ss-b1_3ph_79n_mrecl-2013WP-DSM-NS-200.out
CHNL#S 10:4 [ANGL190472 [BLLDNG2 19.000] [1]] [ANGL156661 [DARL G1 22.000] [1
CHNL#S 6:4 [ANGL190456 [LEPRG1 26.000] [1]] [ANGL156661 [DARL G1 22.000] [1
CHNL#S 5:4 [ANGL190450 [MACTG1 13.800] [1]] [ANGL156661 [DARL G1 22.000] [1
CHNL#S 3:4 [ANGL126652 [RAV 3 22.000] [1]] [ANGL156661 [DARL G1 22.000] [1
CHNL#S 2:4 [ANGL101063 [MYST G7 22.000] [1]] [ANGL156661 [DARL G1 22.000] [1
CHNL#S 1:4 [ANGL100060 [MIS GT1 18.000] [1]] [ANGL156661 [DARL G1 22.000] [1
100.00
-100.0
0.0
1.0000
2.0000
3.0000
4.0000
5.0000
6.0000
7.0000
8.0000
9.0000
10.000
TIME (SECONDS)
SAT, JAN 31 2009 15:41
"NE,NY,NB ANGLE"

2013 WINTER PEAK WITH DSM - DELIVER RESERVE
NS-NB=200; NB-NE=500; CBX=790; ONI=1015 ONS=704
3PH FAULT ON 138KV BUS B1 AT 79N HOPEWELL
SPS TRIPS 2 LINGAN UNITS
FILE: a101ss-b1_3ph_79n_mrecl-2013WP-DSM-NS-200.out
CHNL# 59: [POWER199169 [TUFTCV3 14.400] [3]]
CHNL# 56: [POWER199086 [TRENTON613.800] [6]]
CHNL# 55: [POWER199085 [TRENTN5 13.800] [5]]
CHNL# 54: [POWER199061 [TMP1 STO13.800] [1]]
CHNL# 52: [POWER199043 [ACONIG1 20.000] [1]]
CHNL# 50: [POWER199001 [LINGAN1 14.400] [1]]
2.5000
1.0000
-1.500
0.0
1.0000
2.0000
3.0000
4.0000
5.0000
6.0000
7.0000
8.0000
9.0000
10.000
TIME (SECONDS)
SAT, JAN 31 2009 15:41
NS MW

2013 WINTER PEAK WITH DSM - DELIVER RESERVE
NS-NB=200; NB-NE=500; CBX=790; ONI=1015 ONS=704
3PH FAULT ON 138KV BUS B1 AT 79N HOPEWELL
SPS TRIPS 2 LINGAN UNITS
FILE: a101ss-b1_3ph_79n_mrecl-2013WP-DSM-NS-200.out
CHNL# 49: [POWER190472 [BLLDNG2 19.000] [1]]
CHNL# 45: [POWER190456 [LEPRG1 26.000] [1]]
CHNL# 44: [POWER190450 [MACTG1 13.800] [1]]
CHNL# 42: [POWER126652 [RAV 3 22.000] [1]]
CHNL# 41: [POWER101063 [MYST G7 22.000] [1]]
CHNL# 40: [POWER100060 [MIS GT1 18.000] [1]]
5.0000
9.0000
4.0000
0.0
1.0000
2.0000
3.0000
4.0000
5.0000
6.0000
7.0000
8.0000
9.0000
10.000
TIME (SECONDS)
SAT, JAN 31 2009 15:41
"NE,NY,NB POWER"

2013 WINTER PEAK WITH DSM - DELIVER RESERVE
NS-NB=200; NB-NE=500; CBX=790; ONI=1015 ONS=704
3PH FAULT ON 138KV BUS B1 AT 79N HOPEWELL
SPS TRIPS 2 LINGAN UNITS
FILE: a101ss-b1_3ph_79n_nrecl-2013WP-DSM-NS-200.out
CHNL# 119: [VARS IR141-DIGBY]
CHNL# 118: [VARS IR137-STATIA]
CHNL# 117: [VARS IR114-GLENDHU]
CHNL# 116: [VARS IR84-DALHOUSIE]
CHNL# 115: [VARS IR82_NUTTBY]
CHNL# 114: [VARS IR45_AMHERST]
0.50000
-0.5000
0.0
1.0000
TIME (SECONDS)
SAT, JAN 31 2009 15:41
NS WIND MV

2013 WINTER PEAK WITH DSM - DELIVER RESERVE
NS-NB=200; NB-NE=500; CBX=790; ONI=1015 ONS=704
3PH FAULT ON 138KV BUS B1 AT 79N HOPEWELL
SPS TRIPS 2 LINGAN UNITS
FILE: a101ss-b1_3ph_79n_nrecl-2013WP-DSM-NS-200.out
CHNL# 79: [POWER IR141-DIGBY]
CHNL# 78: [POWER IR137-STATIA]
CHNL# 77: [POWER IR114-GLENDHU]
CHNL# 76: [POWER IR84-DALHOUSIE]
CHNL# 75: [POWER IR82_NUTTBY]
CHNL# 74: [POWER IR45_AMHERST]
1.0000
0.0
TIME (SECONDS)
SAT, JAN 31 2009 15:41
NS WIND MW

2013 WINTER PEAK WITH DSM - DELIVER RESERVE
NS-NB=200; NB-NE=500; CBX=790; ONI=1015 ONS=704
3PH FAULT ON 138KV BUS B1 AT 79N HOPEWELL
SPS TRIPS 2 LINGAN UNITS
FILE: a101ss-b1_3ph_79n_nrecl-2013WP-DSM-NS-200.out
CHNL# 133: [VOLT199125 [ONSLOW 345.00]]
CHNL# 132: [VOLT199120 [HOPEWELL 345.00]]
CHNL# 131: [VOLT199045 [WOODBINE345.00]]
CHNL# 130: [VOLT190320 [SALBRY 345.00]]
CHNL# 128: [VOLT190004 [KESWICK 345.00]]
CHNL# 127: [VOLT 70002 [ORRINGTN345.00]]
1.1000
0.90000
TIME (SECONDS)
SAT, JAN 31 2009 15:41
"345KV VOLTAGE"

2013 WINTER PEAK WITH DSM - DELIVER RESERVE
NS-NB=200; NB-NE=500; CBX=790; ONI=1015 ONS=704
3PH FAULT ON 138KV BUS B1 AT 79N HOPEWELL
SPS TRIPS 2 LINGAN UNITS
FILE: a101ss-b1_3ph_79n_nrecl-2013WP-DSM-NS-200.out
CHNL# 125: 60*(1+[FREQ199125 [ONSLOW 345.00]])
CHNL# 124: 60*(1+[FREQ199120 [HOPEWELL 345.00]])
CHNL# 123: 60*(1+[FREQ199045 [WOODBINE345.00]])
CHNL# 122: 60*(1+[FREQ190320 [SALBRY 345.00]])
CHNL# 121: 60*(1+[FREQ190197 [C.COVE 345.00]])
CHNL# 120: 60*(1+[FREQ 70002 [ORRINGTN345.00]])
60.500
59.500
TIME (SECONDS)
SAT, JAN 31 2009 15:41
FREQUENCY HZ

2013 WINTER PEAK WITH DSM - DELIVER RESERVE
NS-NB=200; NB-NE=500; CBX=790; ONI=1015 ONS=704
3PH FAULT ON 138KV BUS B1 AT 79N HOPEWELL
SPS TRIPS 2 LINGAN UNITS
FILE: a101ss-b1_3ph_79n_nrecl-2013WP-DSM-NS-200.out
CHNL# 146: [VOLT199280 [TUSKET A138.00]]
CHNL# 145: [VOLT199193 [HHWAS 138.00]]
CHNL# 144: [VOLT199165 [TUFTCOVE138.00]]
CHNL# 143: [VOLT199135 [SPRNGHILL138.00]]
CHNL# 142: [VOLT199090 [50N-TREN138.00]]
CHNL# 141: [VOLT199051 [HASTINGS138.00]]
1.2000
0.70000
0.0
1.0000
2.0000
3.0000
4.0000
5.0000
6.0000
7.0000
8.0000
9.0000
10.000
TIME (SECONDS)
SAT, JAN 31 2009 15:41
138KV BUS VOLTS

2013 WINTER PEAK WITH DSM - DELIVER RESERVE
NS-NB=200; NB-NE=500; CBX=790; ONI=1015 ONS=704
3PH FAULT ON 138KV BUS B1 AT 79N HOPEWELL
SPS TRIPS 2 LINGAN UNITS
FILE: a101ss-b1_3ph_79n_nrecl-2013WP-DSM-NS-200.out
CHNL# 140: [VOLT199240 [BWATER A230.00]]
CHNL# 139: [VOLT199200 [BRUSHY 230.00]]
CHNL# 138: [VOLT199130 [ONSLOW 230.00]]
CHNL# 137: [VOLT199050 [HASTINGS230.00]]
CHNL# 136: [VOLT199044 [PT.ACONI230.00]]
CHNL# 135: [VOLT199000 [LINGAN 230.00]]
1.2000
0.70000
0.0
1.0000
2.0000
3.0000
4.0000
5.0000
6.0000
7.0000
8.0000
9.0000
10.000
TIME (SECONDS)
SAT, JAN 31 2009 15:41
230KV BUS VOLTS

2013 WINTER PEAK WITH DSM - DELIVER RESERVE
NS-NB=200; NB-NE=500; CBX=790; ONI=1015 ONS=704
3PH FAULT ON 138KV BUS B1 AT 79N HOPEWELL
SPS TRIPS 2 LINGAN UNITS
FILE: a101ss-b1_3ph_79n_nrecl-2013WP-DSM-NS-200.out
CHNL# 217: [L6533MW]
CHNL# 215: [L6503MW]
CHNL# 197: [L8003MW]
CHNL# 195: [L8004MW]
CHNL# 193: [L8001MW]
CHNL# 221: [L3001MW]
250.00
-250.0
500.00
0.0
1000.0
-1000.
0.0
1.0000
2.0000
3.0000
4.0000
5.0000
6.0000
7.0000
8.0000
9.0000
10.000
TIME (SECONDS)
SAT, JAN 31 2009 15:41
LINE FLOW MW

2013 WINTER PEAK WITH DSM - DELIVER RESERVE
NS-NB=200; NB-NE=500; CBX=790; ONI=1015 ONS=704
3PH FAULT ON 138KV BUS B1 AT 79N HOPEWELL
SPS TRIPS 2 LINGAN UNITS
FILE: a101ss-b1_3ph_79n_nrecl-2013WP-DSM-NS-200.out
CHNL# 154: [IR141-DIGBYH69.0 VOLTS]
CHNL# 153: [IR137-STATIG25.0 VOLTS]
CHNL# 152: [IR114-GLENDH138.0 VOLTS]
CHNL# 151: [IR84-DALHOHV230.0 VOLTS]
CHNL# 150: [IR82_NUTBHV69.0 VOLTS]
CHNL# 149: [IR45_AMHERTP138.0 VOLTS]
1.2000
0.70000
0.0
1.0000
2.0000
3.0000
4.0000
5.0000
6.0000
7.0000
8.0000
9.0000
10.000
TIME (SECONDS)
SAT, JAN 31 2009 15:41
WIND BUS VOLTS

2013 WINTER PEAK WITH DSM - DELIVER RESERVE
NS-NB=200; NB-NE=500; CBX=790; ONI=1015 ONS=704
3 PHASE FAULT ON ONSLOW 138KV BUS B61
TRIPS T72, L6001, T4, CAPACITOR BANK
FILE: a102-b61_3ph_1n_mrecl-2013WP-DSM-NS-200.out
CHNL# 20: [ANGL199169 [TUFTCV3 14.400] [3]] [ANGL156661 [DARL G1 22.000] [1
CHNL# 17: [ANGL199086 [TRENTON613.800] [6]] [ANGL156661 [DARL G1 22.000] [1
CHNL# 16: [ANGL199085 [TRENTN5 13.800] [5]] [ANGL156661 [DARL G1 22.000] [1
CHNL# 15: [ANGL199061 [TMP1 STO13.800] [1]] [ANGL156661 [DARL G1 22.000] [1
CHNL# 13: [ANGL199043 [ACONIG1 20.000] [1]] [ANGL156661 [DARL G1 22.000] [1
CHNL# 11: [ANGAN1 14.400] [1]] [ANGL156661 [DARL G1 22.000] [1
100.00
-100.0
0.0
1.0000
2.0000
3.0000
4.0000
5.0000
6.0000
7.0000
8.0000
9.0000
10.000
TIME (SECONDS)
SAT, JAN 31 2009 15:41
NS ANGLE

2013 WINTER PEAK WITH DSM - DELIVER RESERVE
NS-NB=200; NB-NE=500; CBX=790; ONI=1015 ONS=704
3 PHASE FAULT ON ONSLOW 138KV BUS B61
TRIPS T72, L6001, T4, CAPACITOR BANK
FILE: a102-b61_3ph_1n_mrecl-2013WP-DSM-NS-200.out
CHNL# 10: [ANGL190472 [BLLDNG2 19.000] [1]] [ANGL156661 [DARL G1 22.000] [1
CHNL# 6: [ANGL190456 [LEPRG1 26.000] [1]] [ANGL156661 [DARL G1 22.000] [1
CHNL# 5: [ANGL190450 [MACTG1 13.800] [1]] [ANGL156661 [DARL G1 22.000] [1
CHNL# 3: [ANGL126652 [RAV 3 22.000] [1]] [ANGL156661 [DARL G1 22.000] [1
CHNL# 2: [ANGL101063 [MYST G7 22.000] [1]] [ANGL156661 [DARL G1 22.000] [1
CHNL# 1: [ANGL100060 [MIS GT1 18.000] [1]] [ANGL156661 [DARL G1 22.000] [1
100.00
-100.0
0.0
1.0000
2.0000
3.0000
4.0000
5.0000
6.0000
7.0000
8.0000
9.0000
10.000
TIME (SECONDS)
SAT, JAN 31 2009 15:41
"NE,NY,NB ANGLE"

2013 WINTER PEAK WITH DSM - DELIVER RESERVE
NS-NB=200; NB-NE=500; CBX=790; ONI=1015 ONS=704
3 PHASE FAULT ON ONSLOW 138KV BUS B61
TRIPS T72, L6001, T4, CAPACITOR BANK
FILE: a102-b61_3ph_1n_mrecl-2013WP-DSM-NS-200.out
CHNL# 59: [POWR199169 [TUFTCV3 14.400] [3]]
CHNL# 56: [POWR199086 [TRENTON613.800] [6]]
CHNL# 55: [POWR199085 [TRENTN5 13.800] [5]]
CHNL# 54: [POWR199061 [TMP1 STO13.800] [1]]
CHNL# 52: [POWR199043 [ACONIG1 20.000] [1]]
CHNL# 50: [POWR199001 [LINGAN1 14.400] [1]]
2.5000
0.0
-1.500
1.0000
2.0000
3.0000
4.0000
5.0000
6.0000
7.0000
8.0000
9.0000
10.000
TIME (SECONDS)
SAT, JAN 31 2009 15:41
NS MW

2013 WINTER PEAK WITH DSM - DELIVER RESERVE
NS-NB=200; NB-NE=500; CBX=790; ONI=1015 ONS=704
3 PHASE FAULT ON ONSLOW 138KV BUS B61
TRIPS T72, L6001, T4, CAPACITOR BANK
FILE: a102-b61_3ph_1n_mrecl-2013WP-DSM-NS-200.out
CHNL# 49: [POWER190472 [BLLDNG2 19.000] [1]]
CHNL# 45: [POWER190456 [LEPRG1 26.000] [1]]
CHNL# 44: [POWER190450 [MACTG1 13.800] [1]]
CHNL# 42: [POWER126652 [RAV 3 22.000] [1]]
CHNL# 41: [POWER101063 [MYST G7 22.000] [1]]
CHNL# 40: [POWER100060 [MIS GT1 18.000] [1]]
5.0000
0.0
4.0000
1.0000
2.0000
3.0000
4.0000
5.0000
6.0000
7.0000
8.0000
9.0000
10.000
TIME (SECONDS)
SAT, JAN 31 2009 15:41
"NE,NY,NB POWER"

2013 WINTER PEAK WITH DSM - DELIVER RESERVE
NS-NB=200; NB-NE=500; CBX=790; ONI=1015 ONS=704
3 PHASE FAULT ON ONSLOW 138KV BUS B61
TRIPS T72, L6001, T4, CAPACITOR BANK
FILE: a102-b61_3ph_1n_mect-2013WP-DSM-NS-200.out
CHNL# 119: [VARS IR141-DIGBY]
CHNL# 118: [VARS IR137-STATIA]
CHNL# 117: [VARS IR114-GLENDHU]
CHNL# 116: [VARS IR84-DALHOUSIE]
CHNL# 115: [VARS IR82_NUTTBY]
CHNL# 114: [VARS IR45_AMHERST]
TIME (SECONDS)
SAT, JAN 31 2009 15:41
NS WIND MV

2013 WINTER PEAK WITH DSM - DELIVER RESERVE
NS-NB=200; NB-NE=500; CBX=790; ONI=1015 ONS=704
3 PHASE FAULT ON ONSLOW 138KV BUS B61
TRIPS T72, L6001, T4, CAPACITOR BANK
FILE: a102-b61_3ph_1n_mect-2013WP-DSM-NS-200.out
CHNL# 79: [POWER IR141-DIGBY]
CHNL# 78: [POWER IR137-STATIA]
CHNL# 77: [POWER IR114-GLENDHU]
CHNL# 76: [POWER IR84-DALHOUSIE]
CHNL# 75: [POWER IR82_NUTTBY]
CHNL# 74: [POWER IR45_AMHERST]
TIME (SECONDS)
SAT, JAN 31 2009 15:41
NS WIND MW

2013 WINTER PEAK WITH DSM - DELIVER RESERVE
NS-NB=200; NB-NE=500; CBX=790; ONI=1015 ONS=704
3 PHASE FAULT ON ONSLOW 138KV BUS B61
TRIPS T72, L6001, T4, CAPACITOR BANK
FILE: a102-b61_3ph_1n_mect-2013WP-DSM-NS-200.out
CHNL# 133: [VOLT199125 [ONSLOW 345.00]]
CHNL# 132: [VOLT199120 [HOPEWELL 345.00]]
CHNL# 131: [VOLT199045 [WOODBINE345.00]]
CHNL# 130: [VOLT190320 [SALBRY 345.00]]
CHNL# 128: [VOLT190004 [KESWICK 345.00]]
CHNL# 127: [VOLT 70002 [ORRINGTN345.00]]
TIME (SECONDS)
SAT, JAN 31 2009 15:41
"345KV VOLTAGE"

2013 WINTER PEAK WITH DSM - DELIVER RESERVE
NS-NB=200; NB-NE=500; CBX=790; ONI=1015 ONS=704
3 PHASE FAULT ON ONSLOW 138KV BUS B61
TRIPS T72, L6001, T4, CAPACITOR BANK
FILE: a102-b61_3ph_1n_mect-2013WP-DSM-NS-200.out
CHNL# 125: 60*(1+[FREQ199125 [ONSLOW 345.00]])
CHNL# 124: 60*(1+[FREQ199120 [HOPEWELL 345.00]])
CHNL# 123: 60*(1+[FREQ199045 [WOODBINE345.00]])
CHNL# 122: 60*(1+[FREQ190320 [SALBRY 345.00]])
CHNL# 121: 60*(1+[FREQ190197 [C.COVE 345.00]])
CHNL# 120: 60*(1+[FREQ 70002 [ORRINGTN345.00]])
TIME (SECONDS)
SAT, JAN 31 2009 15:41
FREQUENCY HZ

2013 WINTER PEAK WITH DSM - DELIVER RESERVE
NS-NB=200; NB-NE=500; CBX=790; ONI=1015 ONS=704
3 PHASE FAULT ON ONSLOW 138KV BUS B61
TRIPS T72, L6001, T4, CAPACITOR BANK
FILE: a102-b61_3ph_1n_nrect-2013WP-DSM-NS-200.out
CHNL# 146: [VOLT199280 [TUSKET A138.00]]
CHNL# 145: [VOLT199193 [HHWAS 138.00]]
CHNL# 144: [VOLT199165 [TUFTCOVE138.00]]
CHNL# 143: [VOLT199138: [SPRNGHLL138.00]]
CHNL# 142: [VOLT199090 [SON-TREN138.00]]
CHNL# 141: [VOLT199051 [HASTINGS138.00]]
1.2000
0.70000
0.0
1.0000
2.0000
3.0000
4.0000
5.0000
6.0000
7.0000
8.0000
9.0000
10.000
TIME (SECONDS)
SAT, JAN 31 2009 15:41
138KV BUS VOLTS

2013 WINTER PEAK WITH DSM - DELIVER RESERVE
NS-NB=200; NB-NE=500; CBX=790; ONI=1015 ONS=704
3 PHASE FAULT ON ONSLOW 138KV BUS B61
TRIPS T72, L6001, T4, CAPACITOR BANK
FILE: a102-b61_3ph_1n_nrect-2013WP-DSM-NS-200.out
CHNL# 140: [VOLT199240 [BWATER A230.00]]
CHNL# 139: [VOLT199200 [BRUSHY 230.00]]
CHNL# 138: [VOLT199130 [ONSLOW 230.00]]
CHNL# 137: [VOLT199050 [HASTINGS230.00]]
CHNL# 136: [VOLT199044 [PT.ACONI230.00]]
CHNL# 135: [VOLT199000 [LINGAN 230.00]]
1.2000
0.70000
0.0
1.0000
2.0000
3.0000
4.0000
5.0000
6.0000
7.0000
8.0000
9.0000
10.000
TIME (SECONDS)
SAT, JAN 31 2009 15:41
230KV BUS VOLTS

2013 WINTER PEAK WITH DSM - DELIVER RESERVE
NS-NB=200; NB-NE=500; CBX=790; ONI=1015 ONS=704
3 PHASE FAULT ON ONSLOW 138KV BUS B61
TRIPS T72, L6001, T4, CAPACITOR BANK
FILE: a102-b61_3ph_1n_nrect-2013WP-DSM-NS-200.out
CHNL# 217: [L6533MW]
CHNL# 215: [L6503MW]
CHNL# 197: [L8003MW]
CHNL# 195: [L8004MW]
CHNL# 193: [L8001MW]
CHNL# 221: [L3001MW]
250.00
-250.0
500.00
0.0
1000.0
-1000.
TIME (SECONDS)
SAT, JAN 31 2009 15:41
LINE FLOW MW

2013 WINTER PEAK WITH DSM - DELIVER RESERVE
NS-NB=200; NB-NE=500; CBX=790; ONI=1015 ONS=704
3 PHASE FAULT ON ONSLOW 138KV BUS B61
TRIPS T72, L6001, T4, CAPACITOR BANK
FILE: a102-b61_3ph_1n_nrect-2013WP-DSM-NS-200.out
CHNL# 154: [IR141-DIGBYH69.0 VOLTS]
CHNL# 153: [IR137-STATIG25.0 VOLTS]
CHNL# 152: [IR114-GLENDH138.0 VOLTS]
CHNL# 151: [IR84-DALHOHV230.0 VOLTS]
CHNL# 150: [IR82_NUTBHV69.0 VOLTS]
CHNL# 149: [IR45_AMHERTP138.0 VOLTS]
1.2000
0.70000
0.0
1.0000
2.0000
3.0000
4.0000
5.0000
6.0000
7.0000
8.0000
9.0000
10.000
TIME (SECONDS)
SAT, JAN 31 2009 15:41
WIND BUS VOLTS

2013 WINTER PEAK WITH DSM - DELIVER RESERVE
NS-NB=200; NB-NE=500; CBX=790; ONI=1015 ONS=704
3 PHASE FAULT ON B61 AT BRUSHY HILL 138KV
TRIPS 120H-T72
FILE: a104-120h-b61_3ph_nrecl-2013WP-DSM-NS-200.out
CHNL# 20: [ANGL199169 [TUFTCV3 14.400] [3]] [ANGL156661 [DARL G1 22.000] [1]
CHNL# 17: [ANGL199086 [TRENTON613.800] [6]] [ANGL156661 [DARL G1 22.000] [1]
CHNL# 16: [ANGL199085 [TRENTN5 13.800] [5]] [ANGL156661 [DARL G1 22.000] [1]
CHNL# 15: [ANGL199061 [TMP1 STO13.800] [1]] [ANGL156661 [DARL G1 22.000] [1]
CHNL# 13: [ANGL199043 [ACONIG1 20.000] [1]] [ANGL156661 [DARL G1 22.000] [1]
CHNL# 11: [ANGL199001 [LINGAN1 14.400] [1]] [ANGL156661 [DARL G1 22.000] [1]
100.00
-100.0
0.0
1.0000
2.0000
3.0000
4.0000
5.0000
6.0000
7.0000
8.0000
9.0000
10.000
TIME (SECONDS)
SAT, JAN 31 2009 15:41
NS ANGLE

2013 WINTER PEAK WITH DSM - DELIVER RESERVE
NS-NB=200; NB-NE=500; CBX=790; ONI=1015 ONS=704
3 PHASE FAULT ON B61 AT BRUSHY HILL 138KV
TRIPS 120H-T72
FILE: a104-120h-b61_3ph_nrecl-2013WP-DSM-NS-200.out
CHNL# 10: [ANGL190472 [BLLDNG2 19.000] [1]] [ANGL156661 [DARL G1 22.000] [1]
CHNL# 6: [ANGL190456 [LEPRG1 26.000] [1]] [ANGL156661 [DARL G1 22.000] [1]
CHNL# 5: [ANGL190450 [MACTG1 13.800] [1]] [ANGL156661 [DARL G1 22.000] [1]
CHNL# 3: [ANGL126652 [RAV 3 22.000] [1]] [ANGL156661 [DARL G1 22.000] [1]
CHNL# 2: [ANGL101063 [MYST G7 22.000] [1]] [ANGL156661 [DARL G1 22.000] [1]
CHNL# 1: [ANGL100060 [MIS GT1 18.000] [1]] [ANGL156661 [DARL G1 22.000] [1]
100.00
-100.0
0.0
1.0000
2.0000
3.0000
4.0000
5.0000
6.0000
7.0000
8.0000
9.0000
10.000
TIME (SECONDS)
SAT, JAN 31 2009 15:41
"NE,NY,NB ANGLE"

2013 WINTER PEAK WITH DSM - DELIVER RESERVE
NS-NB=200; NB-NE=500; CBX=790; ONI=1015 ONS=704
3 PHASE FAULT ON B61 AT BRUSHY HILL 138KV
TRIPS 120H-T72
FILE: a104-120h-b61_3ph_nrecl-2013WP-DSM-NS-200.out
CHNL# 59: [POWR199169 [TUFTCV3 14.400] [3]]
CHNL# 56: [POWR199086 [TRENTON613.800] [6]]
CHNL# 55: [POWR199085 [TRENTN5 13.800] [5]]
CHNL# 54: [POWR199061 [TMP1 STO13.800] [1]]
CHNL# 52: [POWR199043 [ACONIG1 20.000] [1]]
CHNL# 50: [POWR199001 [LINGAN1 14.400] [1]]
2.5000
1.0000
-1.500
0.0
1.0000
2.0000
3.0000
4.0000
5.0000
6.0000
7.0000
8.0000
9.0000
10.000
TIME (SECONDS)
SAT, JAN 31 2009 15:41
NS MW

2013 WINTER PEAK WITH DSM - DELIVER RESERVE
NS-NB=200; NB-NE=500; CBX=790; ONI=1015 ONS=704
3 PHASE FAULT ON B61 AT BRUSHY HILL 138KV
TRIPS 120H-T72
FILE: a104-120h-b61_3ph_nrecl-2013WP-DSM-NS-200.out
CHNL# 49: [POWER190472 [BLLDNG2 19.000] [1]]
CHNL# 45: [POWER190456 [LEPRG1 26.000] [1]]
CHNL# 44: [POWER190450 [MACTG1 13.800] [1]]
CHNL# 42: [POWER126652 [RAV 3 22.000] [1]]
CHNL# 41: [POWER101063 [MYST G7 22.000] [1]]
CHNL# 40: [POWER100060 [MIS GT1 18.000] [1]]
5.0000
9.0000
4.0000
0.0
6.5000
1.0000
2.0000
1.0000
2.0000
3.0000
4.0000
5.0000
6.0000
7.0000
8.0000
9.0000
10.000
TIME (SECONDS)
SAT, JAN 31 2009 15:41
"NE,NY,NB POWER"

2013 WINTER PEAK WITH DSM - DELIVER RESERVE
NS-NB=200; NB-NE=500; CBX=790; ONI=1015 ONS=704
3 PHASE FAULT ON B61 AT BRUSHY HILL 138KV
TRIPS 120H-T72
FILE: a104-120h-b61_3ph_nrecl-2013WP-DSM-NS-200.out
CHNL# 119: [VARS IR141-DIGBY]
CHNL# 118: [VARS IR137-STATIA]
CHNL# 117: [VARS IR114-GLENDHU]
CHNL# 116: [VARS IR84-DALHOUSIE]
CHNL# 115: [VARS IR82_NUTTBY]
CHNL# 114: [VARS IR45_AMHERST]
TIME (SECONDS)
SAT, JAN 31 2009 15:41
NS WIND MV

2013 WINTER PEAK WITH DSM - DELIVER RESERVE
NS-NB=200; NB-NE=500; CBX=790; ONI=1015 ONS=704
3 PHASE FAULT ON B61 AT BRUSHY HILL 138KV
TRIPS 120H-T72
FILE: a104-120h-b61_3ph_nrecl-2013WP-DSM-NS-200.out
CHNL# 79: [POWER IR141-DIGBY]
CHNL# 78: [POWER IR137-STATIA]
CHNL# 77: [POWER IR114-GLENDHU]
CHNL# 76: [POWER IR84-DALHOUSIE]
CHNL# 75: [POWER IR82_NUTTBY]
CHNL# 74: [POWER IR45_AMHERST]
TIME (SECONDS)
SAT, JAN 31 2009 15:41
NS WIND MW

2013 WINTER PEAK WITH DSM - DELIVER RESERVE
NS-NB=200; NB-NE=500; CBX=790; ONI=1015 ONS=704
3 PHASE FAULT ON B61 AT BRUSHY HILL 138KV
TRIPS 120H-T72
FILE: a104-120h-b61_3ph_nrecl-2013WP-DSM-NS-200.out
CHNL# 133: [VOLT199125 [ONSLOW 345.00]]
CHNL# 132: [VOLT199120 [HOPEWELL 345.00]]
CHNL# 131: [VOLT199045 [WOODBINE345.00]]
CHNL# 130: [VOLT190320 [SALBRY 345.00]]
CHNL# 128: [VOLT190004 [KESWICK 345.00]]
CHNL# 127: [VOLT 70002 [ORRINGTN345.00]]
TIME (SECONDS)
SAT, JAN 31 2009 15:41
"345KV VOLTAGE"

2013 WINTER PEAK WITH DSM - DELIVER RESERVE
NS-NB=200; NB-NE=500; CBX=790; ONI=1015 ONS=704
3 PHASE FAULT ON B61 AT BRUSHY HILL 138KV
TRIPS 120H-T72
FILE: a104-120h-b61_3ph_nrecl-2013WP-DSM-NS-200.out
CHNL# 125: 60*(1+[FREQ199125 [ONSLOW 345.00]])
CHNL# 124: 60*(1+[FREQ199120 [HOPEWELL 345.00]])
CHNL# 123: 60*(1+[FREQ199045 [WOODBINE345.00]])
CHNL# 122: 60*(1+[FREQ190320 [SALBRY 345.00]])
CHNL# 121: 60*(1+[FREQ190197 [C.COVE 345.00]])
CHNL# 120: 60*(1+[FREQ 70002 [ORRINGTN345.00]])
TIME (SECONDS)
SAT, JAN 31 2009 15:41
FREQUENCY HZ

2013 WINTER PEAK WITH DSM - DELIVER RESERVE
NS-NB=200; NB-NE=500; CBX=790; ONI=1015 ONS=704
3 PHASE FAULT ON B61 AT BRUSHY HILL 138KV
TRIPS 120H-T72
FILE: a104-120h-b61_3ph_nrecl-2013WP-DSM-NS-200.out
CHNL# 146: [VOLT199280 [TUSKET A138.00]]
CHNL# 145: [VOLT199193 [HHWAS 138.00]]
CHNL# 144: [VOLT199165 [TUFTCOVE138.00]]
CHNL# 143: [VOLT199138 [SPRNGHILL138.00]]
CHNL# 142: [VOLT199090 [SON-TREN138.00]]
CHNL# 141: [VOLT199051 [HASTINGS138.00]]
TIME (SECONDS)
SAT, JAN 31 2009 15:41
138KV BUS VOLTS

2013 WINTER PEAK WITH DSM - DELIVER RESERVE
NS-NB=200; NB-NE=500; CBX=790; ONI=1015 ONS=704
3 PHASE FAULT ON B61 AT BRUSHY HILL 138KV
TRIPS 120H-T72
FILE: a104-120h-b61_3ph_nrecl-2013WP-DSM-NS-200.out
CHNL# 140: [VOLT199240 [BWATER A230.00]]
CHNL# 139: [VOLT199200 [BRUSHY 230.00]]
CHNL# 138: [VOLT199130 [ONSLOW 230.00]]
CHNL# 137: [VOLT199050 [HASTINGS230.00]]
CHNL# 136: [VOLT199044 [PT.ACONI230.00]]
CHNL# 135: [VOLT199000 [LINGAN 230.00]]
TIME (SECONDS)
SAT, JAN 31 2009 15:41
230KV BUS VOLTS

2013 WINTER PEAK WITH DSM - DELIVER RESERVE
NS-NB=200; NB-NE=500; CBX=790; ONI=1015 ONS=704
3 PHASE FAULT ON B61 AT BRUSHY HILL 138KV
TRIPS 120H-T72
FILE: a104-120h-b61_3ph_nrecl-2013WP-DSM-NS-200.out
CHNL# 217: [L6533MW]
CHNL# 215: [L6503MW]
CHNL# 197: [L8003MW]
CHNL# 195: [L8004MW]
CHNL# 193: [L8001MW]
CHNL# 221: [L3001MW]
TIME (SECONDS)
SAT, JAN 31 2009 15:41
LINE FLOW MW

2013 WINTER PEAK WITH DSM - DELIVER RESERVE
NS-NB=200; NB-NE=500; CBX=790; ONI=1015 ONS=704
3 PHASE FAULT ON B61 AT BRUSHY HILL 138KV
TRIPS 120H-T72
FILE: a104-120h-b61_3ph_nrecl-2013WP-DSM-NS-200.out
CHNL# 154: [IR141-DIGBYH69.0 VOLTS]
CHNL# 153: [IR137-STATIG25.0 VOLTS]
CHNL# 152: [IR114-GLENDH138.0 VOLTS]
CHNL# 151: [IR84-DALHOHV230.0 VOLTS]
CHNL# 150: [IR82 NUTBHV69.0 VOLTS]
CHNL# 149: [IR45 AMHERTP138.0 VOLTS]
TIME (SECONDS)
SAT, JAN 31 2009 15:41
WIND BUS VOLTS

2013 WINTER PEAK WITH DSM - DELIVER RESERVE
NS-NB=200; NB-NE=500; CBX=790; ONI=1015 ONS=704
3 PHASE FAULT ON L6012 AT 120H BRUSHY
RECLOSES IN 5 SECONDS
FILE: a105-L6012_3ph_recl-2013WP-DSM-NS-200.out
CHNL#S 20.4: [ANGL199169] [TUFTCV3 14.400] [3] [ANGL156661] [DARL G1 22.000] [1]
CHNL#S 17.4: [ANGL199086] [TRENTON613.800] [6] [ANGL156661] [DARL G1 22.000] [1]
CHNL#S 16.4: [ANGL199085] [TRENTN5 13.800] [5] [ANGL156661] [DARL G1 22.000] [1]
CHNL#S 15.4: [ANGL199061] [TMP1 STO13.800] [1] [ANGL156661] [DARL G1 22.000] [1]
CHNL#S 13.4: [ANGL199043] [ACONIG1 20.000] [1] [ANGL156661] [DARL G1 22.000] [1]
CHNL#S 11.4: [ANGL199001] [LINGAN1 14.400] [1] [ANGL156661] [DARL G1 22.000] [1]
100.00
-100.0
0.0
1.0000
2.0000
3.0000
4.0000
5.0000
6.0000
7.0000
8.0000
9.0000
10.000
TIME (SECONDS)
SAT, JAN 31 2009 15:41
NS ANGLE

2013 WINTER PEAK WITH DSM - DELIVER RESERVE
NS-NB=200; NB-NE=500; CBX=790; ONI=1015 ONS=704
3 PHASE FAULT ON L6012 AT 120H BRUSHY
RECLOSES IN 5 SECONDS
FILE: a105-L6012_3ph_recl-2013WP-DSM-NS-200.out
CHNL#S 10.4: [ANGL190472] [BLLDNG2 19.000] [1] [ANGL156661] [DARL G1 22.000] [1]
CHNL#S 6.4: [ANGL190456] [LEPRG1 26.000] [1] [ANGL156661] [DARL G1 22.000] [1]
CHNL#S 5.4: [ANGL190450] [MACTG1 13.800] [1] [ANGL156661] [DARL G1 22.000] [1]
CHNL#S 3.4: [ANGL126652] [RAV 3 22.000] [1] [ANGL156661] [DARL G1 22.000] [1]
CHNL#S 2.4: [ANGL101063] [MYST G7 22.000] [1] [ANGL156661] [DARL G1 22.000] [1]
CHNL#S 1.4: [ANGL100060] [MIS GT1 18.000] [1] [ANGL156661] [DARL G1 22.000] [1]
100.00
-100.0
0.0
1.0000
2.0000
3.0000
4.0000
5.0000
6.0000
7.0000
8.0000
9.0000
10.000
TIME (SECONDS)
SAT, JAN 31 2009 15:41
"NE,NY,NB ANGLE"

2013 WINTER PEAK WITH DSM - DELIVER RESERVE
NS-NB=200; NB-NE=500; CBX=790; ONI=1015 ONS=704
3 PHASE FAULT ON L6012 AT 120H BRUSHY
RECLOSES IN 5 SECONDS
FILE: a105-L6012_3ph_recl-2013WP-DSM-NS-200.out
CHNL# 59: [POWR199169] [TUFTCV3 14.400] [3] [1]
CHNL# 56: [POWR199086] [TRENTON613.800] [6] [1]
CHNL# 55: [POWR199085] [TRENTN5 13.800] [5] [1]
CHNL# 54: [POWR199061] [TMP1 STO13.800] [1] [1]
CHNL# 52: [POWR199043] [ACONIG1 20.000] [1] [1]
CHNL# 50: [POWR199001] [LINGAN1 14.400] [1] [1]
2.5000
-1.500
0.0
1.0000
2.0000
3.0000
4.0000
5.0000
6.0000
7.0000
8.0000
9.0000
10.000
TIME (SECONDS)
SAT, JAN 31 2009 15:41
NS MW

2013 WINTER PEAK WITH DSM - DELIVER RESERVE
NS-NB=200; NB-NE=500; CBX=790; ONI=1015 ONS=704
3 PHASE FAULT ON L6012 AT 120H BRUSHY
RECLOSES IN 5 SECONDS
FILE: a105-L6012_3ph_recl-2013WP-DSM-NS-200.out
CHNL# 49: [POWER190472] [BLLDNG2 19.000] [1]
CHNL# 45: [POWER190456] [LEPRG1 26.000] [1]
CHNL# 44: [POWER190450] [MACTG1 13.800] [1]
CHNL# 42: [POWER126652] [RAV 3 22.000] [1]
CHNL# 41: [POWER101063] [MYST G7 22.000] [1]
CHNL# 40: [POWER100060] [MIS GT1 18.000] [1]
5.0000
4.0000
0.0
1.0000
2.0000
3.0000
4.0000
5.0000
6.0000
7.0000
8.0000
9.0000
10.000
TIME (SECONDS)
SAT, JAN 31 2009 15:41
"NE,NY,NB POWER"

2013 WINTER PEAK WITH DSM - DELIVER RESERVE
NS-NB=200; NB-NE=500; CBX=790; ONI=1015 ONS=704
3 PHASE FAULT ON L6012 AT 120H BRUSHY
RECLOSES IN 5 SECONDS
FILE: a105-L6012_3ph_recl-2013WP-DSM-NS-200.out
CHNL# 119: [VARS IR141-DIGBY]
CHNL# 118: [VARS IR137-STATIA]
CHNL# 117: [VARS IR114-GLENDHU]
CHNL# 116: [VARS IR84-DALHOUSIE]
CHNL# 115: [VARS IR82_NUTTBY]
CHNL# 114: [VARS IR45_AMHERST]
TIME (SECONDS)
SAT, JAN 31 2009 15:41
NS WIND MV

2013 WINTER PEAK WITH DSM - DELIVER RESERVE
NS-NB=200; NB-NE=500; CBX=790; ONI=1015 ONS=704
3 PHASE FAULT ON L6012 AT 120H BRUSHY
RECLOSES IN 5 SECONDS
FILE: a105-L6012_3ph_recl-2013WP-DSM-NS-200.out
CHNL# 79: [POWER IR141-DIGBY]
CHNL# 78: [POWER IR137-STATIA]
CHNL# 77: [POWER IR114-GLENDHU]
CHNL# 76: [POWER IR84-DALHOUSIE]
CHNL# 75: [POWER IR82_NUTTBY]
CHNL# 74: [POWER IR45_AMHERST]
TIME (SECONDS)
SAT, JAN 31 2009 15:41
NS WIND MW

2013 WINTER PEAK WITH DSM - DELIVER RESERVE
NS-NB=200; NB-NE=500; CBX=790; ONI=1015 ONS=704
3 PHASE FAULT ON L6012 AT 120H BRUSHY
RECLOSES IN 5 SECONDS
FILE: a105-L6012_3ph_recl-2013WP-DSM-NS-200.out
CHNL# 133: [VOLT199125 IONSLOW 345.00]
CHNL# 132: [VOLT199120 [HOPEWELL345.00]
CHNL# 131: [VOLT199045 [WOODBINE345.00]
CHNL# 130: [VOLT190320 [SALBRY 345.00]
CHNL# 128: [VOLT190004 [KESWICK 345.00]
CHNL# 127: [VOLT 70002 [ORRINGTN345.00]
TIME (SECONDS)
SAT, JAN 31 2009 15:41
"345KV VOLTAGE"

2013 WINTER PEAK WITH DSM - DELIVER RESERVE
NS-NB=200; NB-NE=500; CBX=790; ONI=1015 ONS=704
3 PHASE FAULT ON L6012 AT 120H BRUSHY
RECLOSES IN 5 SECONDS
FILE: a105-L6012_3ph_recl-2013WP-DSM-NS-200.out
CHNL# 125: 60*(1+[FREQ199125 IONSLOW 345.00])
CHNL# 124: 60*(1+[FREQ199120 [HOPEWELL345.00])
CHNL# 123: 60*(1+[FREQ199045 [WOODBINE345.00])
CHNL# 122: 60*(1+[FREQ190320 [SALBRY 345.00])
CHNL# 121: 60*(1+[FREQ190197 [C.COVE 345.00])
CHNL# 120: 60*(1+[FREQ 70002 [ORRINGTN345.00])
TIME (SECONDS)
SAT, JAN 31 2009 15:41
FREQUENCY HZ

2013 WINTER PEAK WITH DSM - DELIVER RESERVE
NS-NB=200; NB-NE=500; CBX=790; ONI=1015 ONS=704
3 PHASE FAULT ON L6012 AT 120H BRUSHY
RECLOSES IN 5 SECONDS
FILE: a105-L6012_3ph_recl-2013WP-DSM-NS-200.out
CHNL# 146: [VOLT199280 [TUSKET A138.00]]
CHNL# 145: [VOLT199193 [HHWAS 138.00]]
CHNL# 144: [VOLT199165 [TUFTCOVE138.00]]
CHNL# 143: [VOLT199138: [SPRNGHILL138.00]]
CHNL# 142: [VOLT199090 [50N-TREN138.00]]
CHNL# 141: [VOLT199051 [HASTINGS138.00]]
1.2000
0.70000
0.0
1.0000
2.0000
3.0000
4.0000
5.0000
6.0000
7.0000
8.0000
9.0000
10.000
TIME (SECONDS)
SAT, JAN 31 2009 15:41
138KV BUS VOLTS

2013 WINTER PEAK WITH DSM - DELIVER RESERVE
NS-NB=200; NB-NE=500; CBX=790; ONI=1015 ONS=704
3 PHASE FAULT ON L6012 AT 120H BRUSHY
RECLOSES IN 5 SECONDS
FILE: a105-L6012_3ph_recl-2013WP-DSM-NS-200.out
CHNL# 140: [VOLT199240 [BWATER A230.00]]
CHNL# 139: [VOLT199200 [BRUSHY 230.00]]
CHNL# 138: [VOLT199130 [ONSLOW 230.00]]
CHNL# 137: [VOLT199050 [HASTINGS230.00]]
CHNL# 136: [VOLT199044 [PT.ACONI230.00]]
CHNL# 135: [VOLT199000 [LINGAN 230.00]]
1.2000
0.70000
0.0
1.0000
2.0000
3.0000
4.0000
5.0000
6.0000
7.0000
8.0000
9.0000
10.000
TIME (SECONDS)
SAT, JAN 31 2009 15:41
230KV BUS VOLTS

2013 WINTER PEAK WITH DSM - DELIVER RESERVE
NS-NB=200; NB-NE=500; CBX=790; ONI=1015 ONS=704
3 PHASE FAULT ON L6012 AT 120H BRUSHY
RECLOSES IN 5 SECONDS
FILE: a105-L6012_3ph_recl-2013WP-DSM-NS-200.out
CHNL# 217: [L6513MW]
CHNL# 215: [L6503MW]
CHNL# 197: [L8003MW]
CHNL# 195: [L8004MW]
CHNL# 193: [L8001MW]
CHNL# 221: [L3001MW]
250.00
-250.0
500.00
0.0
1000.0
-1000.
1000.0
0.0
1000.0
-1000.
0.0
1.0000
2.0000
3.0000
4.0000
5.0000
6.0000
7.0000
8.0000
9.0000
10.000
TIME (SECONDS)
SAT, JAN 31 2009 15:41
LINE FLOW MW

2013 WINTER PEAK WITH DSM - DELIVER RESERVE
NS-NB=200; NB-NE=500; CBX=790; ONI=1015 ONS=704
3 PHASE FAULT ON L6012 AT 120H BRUSHY
RECLOSES IN 5 SECONDS
FILE: a105-L6012_3ph_recl-2013WP-DSM-NS-200.out
CHNL# 154: [IR141-DIGBYH69.0 VOLTS]
CHNL# 153: [IR137-STATIG25.0 VOLTS]
CHNL# 152: [IR114-GLENDH138.0 VOLTS]
CHNL# 151: [IR84-DALHOHV230.0 VOLTS]
CHNL# 150: [IR82 NUTBHV69.0 VOLTS]
CHNL# 149: [IR45 AMHERTP138.0 VOLTS]
1.2000
0.70000
0.0
1.0000
2.0000
3.0000
4.0000
5.0000
6.0000
7.0000
8.0000
9.0000
10.000
TIME (SECONDS)
SAT, JAN 31 2009 15:41
WIND BUS VOLTS

2013 WINTER PEAK WITH DSM - DELIVER RESERVE
NS-NB=200; NB-NE=500; CBX=790; ONI=1015 ONS=704
3 PHASE FAULT ON B62 AT LAKESIDE
TRIPS L6008, L6016, 103H-T61
FILE: a106-103h-b62_3ph_nrecl-2013WP-DSM-NS-200.out
CHNL#S 20,4: [ANGL199169 [TUFTCV3 14.400] [3]] [ANGL156661 [DARL G1 22.000] [1]
CHNL#S 17,4: [ANGL199086 [TRENTON613.800] [6]] [ANGL156661 [DARL G1 22.000] [1]
CHNL#S 16,4: [ANGL199085 [TRENTN5 13.800] [5]] [ANGL156661 [DARL G1 22.000] [1]
CHNL#S 15,4: [ANGL199061 [TMP1 STO13.800] [1]] [ANGL156661 [DARL G1 22.000] [1]
CHNL#S 13,4: [ANGL199043 [ACONIG1 20.000] [1]] [ANGL156661 [DARL G1 22.000] [1]
CHNL#S 11,4: [ANGL199001 [LINGAN1 14.400] [1]] [ANGL156661 [DARL G1 22.000] [1]
100.00
-100.0
0.0
1.0000
2.0000
3.0000
4.0000
5.0000
6.0000
7.0000
8.0000
9.0000
10.000
TIME (SECONDS)
SAT, JAN 31 2009 15:41
NS ANGLE

2013 WINTER PEAK WITH DSM - DELIVER RESERVE
NS-NB=200; NB-NE=500; CBX=790; ONI=1015 ONS=704
3 PHASE FAULT ON B62 AT LAKESIDE
TRIPS L6008, L6016, 103H-T61
FILE: a106-103h-b62_3ph_nrecl-2013WP-DSM-NS-200.out
CHNL#S 10,4: [ANGL190472 [BLLDNG2 19.000] [1]] [ANGL156661 [DARL G1 22.000] [1]
CHNL#S 6,4: [ANGL190456 [LEPRG1 26.000] [1]] [ANGL156661 [DARL G1 22.000] [1]
CHNL#S 5,4: [ANGL190450 [MACTG1 13.800] [1]] [ANGL156661 [DARL G1 22.000] [1]
CHNL#S 3,4: [ANGL126652 [RAV 3 22.000] [1]] [ANGL156661 [DARL G1 22.000] [1]
CHNL#S 2,4: [ANGL101063 [MYST G7 22.000] [1]] [ANGL156661 [DARL G1 22.000] [1]
CHNL#S 1,4: [ANGL100060 [MIS GT1 18.000] [1]] [ANGL156661 [DARL G1 22.000] [1]
100.00
-100.0
0.0
1.0000
2.0000
3.0000
4.0000
5.0000
6.0000
7.0000
8.0000
9.0000
10.000
TIME (SECONDS)
SAT, JAN 31 2009 15:41
"NE,NY,NB ANGLE"

2013 WINTER PEAK WITH DSM - DELIVER RESERVE
NS-NB=200; NB-NE=500; CBX=790; ONI=1015 ONS=704
3 PHASE FAULT ON B62 AT LAKESIDE
TRIPS L6008, L6016, 103H-T61
FILE: a106-103h-b62_3ph_nrecl-2013WP-DSM-NS-200.out
CHNL# 59: [POWR199169 [TUFTCV3 14.400] [3]]
CHNL# 56: [POWR199086 [TRENTON613.800] [6]]
CHNL# 55: [POWR199085 [TRENTN5 13.800] [5]]
CHNL# 54: [POWR199061 [TMP1 STO13.800] [1]]
CHNL# 52: [POWR199043 [ACONIG1 20.000] [1]]
CHNL# 50: [POWR199001 [LINGAN1 14.400] [1]]
2.5000
0.0
-1.500
1.0000
2.0000
3.0000
4.0000
5.0000
6.0000
7.0000
8.0000
9.0000
10.000
TIME (SECONDS)
SAT, JAN 31 2009 15:41
NS MW

2013 WINTER PEAK WITH DSM - DELIVER RESERVE
NS-NB=200; NB-NE=500; CBX=790; ONI=1015 ONS=704
3 PHASE FAULT ON B62 AT LAKESIDE
TRIPS L6008, L6016, 103H-T61
FILE: a106-103h-b62_3ph_nrecl-2013WP-DSM-NS-200.out
CHNL# 49: [POWER190472 [BLLDNG2 19.000] [1]]
CHNL# 45: [POWER190456 [LEPRG1 26.000] [1]]
CHNL# 44: [POWER190450 [MACTG1 13.800] [1]]
CHNL# 42: [POWER126652 [RAV 3 22.000] [1]]
CHNL# 41: [POWER101063 [MYST G7 22.000] [1]]
CHNL# 40: [POWER100060 [MIS GT1 18.000] [1]]
5.0000
0.0
4.0000
1.0000
2.0000
3.0000
4.0000
5.0000
6.0000
7.0000
8.0000
9.0000
10.000
TIME (SECONDS)
SAT, JAN 31 2009 15:41
"NE,NY,NB POWER"

2013 WINTER PEAK WITH DSM - DELIVER RESERVE
NS-NB=200; NB-NE=500; CBX=790; ONI=1015 ONS=704
3 PHASE FAULT ON B62 AT LAKESIDE
TRIPS L6008, L6016, 103H-T61
FILE: a106-103h-b62_3ph_nrecl-2013WP-DSM-NS-200.out
CHNL# 119: [VARS IR141-DIGBY]
CHNL# 118: [VARS IR137-STATIA]
CHNL# 117: [VARS IR114-GLENDHU]
CHNL# 116: [VARS IR84-DALHOUSIE]
CHNL# 115: [VARS IR82_NUTTBY]
CHNL# 114: [VARS IR45_AMHERST]
0.50000
-0.5000
0.0
1.0000
2.0000
3.0000
4.0000
5.0000
6.0000
7.0000
8.0000
9.0000
10.000
TIME (SECONDS)
SAT, JAN 31 2009 15:41
NS WIND MV

2013 WINTER PEAK WITH DSM - DELIVER RESERVE
NS-NB=200; NB-NE=500; CBX=790; ONI=1015 ONS=704
3 PHASE FAULT ON B62 AT LAKESIDE
TRIPS L6008, L6016, 103H-T61
FILE: a106-103h-b62_3ph_nrecl-2013WP-DSM-NS-200.out
CHNL# 79: [POWER IR141-DIGBY]
CHNL# 78: [POWER IR137-STATIA]
CHNL# 77: [POWER IR114-GLENDHU]
CHNL# 76: [POWER IR84-DALHOUSIE]
CHNL# 75: [POWER IR82_NUTTBY]
CHNL# 74: [POWER IR45_AMHERST]
1.0000
0.0
0.0
1.0000
2.0000
3.0000
4.0000
5.0000
6.0000
7.0000
8.0000
9.0000
10.000
TIME (SECONDS)
SAT, JAN 31 2009 15:41
NS WIND MW

2013 WINTER PEAK WITH DSM - DELIVER RESERVE
NS-NB=200; NB-NE=500; CBX=790; ONI=1015 ONS=704
3 PHASE FAULT ON B62 AT LAKESIDE
TRIPS L6008, L6016, 103H-T61
FILE: a106-103h-b62_3ph_nrecl-2013WP-DSM-NS-200.out
CHNL# 133: [VOLT199125 IONSLOW 345.00]
CHNL# 132: [VOLT199120 IHOPEWELL345.00]
CHNL# 131: [VOLT199045 IWOODBINE345.00]
CHNL# 130: [VOLT190320 ISALBRY 345.00]
CHNL# 128: [VOLT190004 IKESWICK 345.00]
CHNL# 127: [VOLT 70002 IORRINGTN345.00]
1.1000
0.90000
1.0000
2.0000
3.0000
4.0000
5.0000
6.0000
7.0000
8.0000
9.0000
10.000
TIME (SECONDS)
SAT, JAN 31 2009 15:41
"345KV VOLTAGE"

2013 WINTER PEAK WITH DSM - DELIVER RESERVE
NS-NB=200; NB-NE=500; CBX=790; ONI=1015 ONS=704
3 PHASE FAULT ON B62 AT LAKESIDE
TRIPS L6008, L6016, 103H-T61
FILE: a106-103h-b62_3ph_nrecl-2013WP-DSM-NS-200.out
CHNL# 125: 60*(1+[FREQ199125 IONSLOW 345.00])
CHNL# 124: 60*(1+[FREQ199120 IHOPEWELL345.00])
CHNL# 123: 60*(1+[FREQ199045 IWOODBINE345.00])
CHNL# 122: 60*(1+[FREQ190320 ISALBRY 345.00])
CHNL# 121: 60*(1+[FREQ190197 IC.COVE 345.00])
CHNL# 120: 60*(1+[FREQ 70002 IORRINGTN345.00])
60.500
59.500
0.0
1.0000
2.0000
3.0000
4.0000
5.0000
6.0000
7.0000
8.0000
9.0000
10.000
TIME (SECONDS)
SAT, JAN 31 2009 15:41
FREQUENCY HZ

2013 WINTER PEAK WITH DSM - DELIVER RESERVE
NS-NB=200; NB-NE=500; CBX=790; ONI=1015 ONS=704
3 PHASE FAULT ON B62 AT LAKESIDE
TRIPS L6008, L6016, 103H-T61
FILE: a106-103h-b62_3ph_nrecl-2013WP-DSM-NS-200.out
CHNL# 146: [VOLT199280 [TUSKET A138.00]]
CHNL# 145: [VOLT199193 [HHWAS 138.00]]
CHNL# 144: [VOLT199165 [TUFTCOVE138.00]]
CHNL# 143: [VOLT199138 [SPRNGHILL138.00]]
CHNL# 142: [VOLT199090 [50N-TREN138.00]]
CHNL# 141: [VOLT199051 [HASTINGS138.00]]
1.2000
0.70000
0.0
1.0000
2.0000
3.0000
4.0000
5.0000
6.0000
7.0000
8.0000
9.0000
10.000
TIME (SECONDS)
SAT, JAN 31 2009 15:41
138KV BUS VOLTS

2013 WINTER PEAK WITH DSM - DELIVER RESERVE
NS-NB=200; NB-NE=500; CBX=790; ONI=1015 ONS=704
3 PHASE FAULT ON B62 AT LAKESIDE
TRIPS L6008, L6016, 103H-T61
FILE: a106-103h-b62_3ph_nrecl-2013WP-DSM-NS-200.out
CHNL# 140: [VOLT199240 [BWATER A230.00]]
CHNL# 139: [VOLT199200 [BRUSHY 230.00]]
CHNL# 138: [VOLT199130 [ONSLOW 230.00]]
CHNL# 137: [VOLT199050 [HASTINGS230.00]]
CHNL# 136: [VOLT199044 [PT.ACONI230.00]]
CHNL# 135: [VOLT199000 [LINGAN 230.00]]
1.2000
0.70000
0.0
1.0000
2.0000
3.0000
4.0000
5.0000
6.0000
7.0000
8.0000
9.0000
10.000
TIME (SECONDS)
SAT, JAN 31 2009 15:41
230KV BUS VOLTS

2013 WINTER PEAK WITH DSM - DELIVER RESERVE
NS-NB=200; NB-NE=500; CBX=790; ONI=1015 ONS=704
3 PHASE FAULT ON B62 AT LAKESIDE
TRIPS L6008, L6016, 103H-T61
FILE: a106-103h-b62_3ph_nrecl-2013WP-DSM-NS-200.out
CHNL# 217: [L6533MW]
CHNL# 215: [L6503MW]
CHNL# 197: [L8003MW]
CHNL# 195: [L8004MW]
CHNL# 193: [L8001MW]
CHNL# 221: [L3001MW]
250.00
-250.0
500.00
0.0
1000.0
-1000.
0.0
1.0000
2.0000
3.0000
4.0000
5.0000
6.0000
7.0000
8.0000
9.0000
10.000
TIME (SECONDS)
SAT, JAN 31 2009 15:41
LINE FLOW MW

2013 WINTER PEAK WITH DSM - DELIVER RESERVE
NS-NB=200; NB-NE=500; CBX=790; ONI=1015 ONS=704
3 PHASE FAULT ON B62 AT LAKESIDE
TRIPS L6008, L6016, 103H-T61
FILE: a106-103h-b62_3ph_nrecl-2013WP-DSM-NS-200.out
CHNL# 154: [IR141-DIGBYH69.0 VOLTS]
CHNL# 153: [IR137-STATIG25.0 VOLTS]
CHNL# 152: [IR114-GLENDH138.0 VOLTS]
CHNL# 151: [IR84-DALHOHV230.0 VOLTS]
CHNL# 150: [IR82_NUTBHV69.0 VOLTS]
CHNL# 149: [IR45_AMHERTP138.0 VOLTS]
1.2000
0.70000
0.0
1.0000
2.0000
3.0000
4.0000
5.0000
6.0000
7.0000
8.0000
9.0000
10.000
TIME (SECONDS)
SAT, JAN 31 2009 15:41
WIND BUS VOLTS

2013 WINTER PEAK WITH DSM - DELIVER RESERVE
NS-NB=200; NB-NE=500; CBX=790; ONI=1015 ONS=704
3 PHASE FAULT ON L6003 AT SACKVILLE
RECLOSES FROM SACKVILLE IN 5 SECONDS
FILE: a107-l6003_3ph_rect-2013WP-DSM-NS-200.out
CHNL#S 20.4: [ANGL199169] [TUFTCV3 14.400] [3] [ANGL156661] [DARL G1 22.000] [1]
CHNL#S 17.4: [ANGL199086] [TRENTON613.800] [6] [ANGL156661] [DARL G1 22.000] [1]
CHNL#S 16.4: [ANGL199085] [TRENTN5 13.800] [5] [ANGL156661] [DARL G1 22.000] [1]
CHNL#S 15.4: [ANGL199061] [TMP1 STO13.800] [1] [ANGL156661] [DARL G1 22.000] [1]
CHNL#S 13.4: [ANGL199043] [ACONIG1 20.000] [1] [ANGL156661] [DARL G1 22.000] [1]
CHNL#S 11.4: [ANGL199001] [LINGAN1 14.400] [1] [ANGL156661] [DARL G1 22.000] [1]
100.00
-100.0
0.0
1.0000
2.0000
3.0000
4.0000
5.0000
6.0000
7.0000
8.0000
9.0000
10.000
TIME (SECONDS)
SAT, JAN 31 2009 15:41
NS ANGLE

2013 WINTER PEAK WITH DSM - DELIVER RESERVE
NS-NB=200; NB-NE=500; CBX=790; ONI=1015 ONS=704
3 PHASE FAULT ON L6003 AT SACKVILLE
RECLOSES FROM SACKVILLE IN 5 SECONDS
FILE: a107-l6003_3ph_rect-2013WP-DSM-NS-200.out
CHNL#S 10.4: [ANGL190472] [BLLDNG2 19.000] [1] [ANGL156661] [DARL G1 22.000] [1]
CHNL#S 6.4: [ANGL190456] [LEPRG1 26.000] [1] [ANGL156661] [DARL G1 22.000] [1]
CHNL#S 5.4: [ANGL190450] [MACTG1 13.800] [1] [ANGL156661] [DARL G1 22.000] [1]
CHNL#S 3.4: [ANGL126652] [RAV 3 22.000] [1] [ANGL156661] [DARL G1 22.000] [1]
CHNL#S 2.4: [ANGL101063] [MYST G7 22.000] [1] [ANGL156661] [DARL G1 22.000] [1]
CHNL#S 1.4: [ANGL100060] [MIS GT1 18.000] [1] [ANGL156661] [DARL G1 22.000] [1]
100.00
-100.0
0.0
1.0000
2.0000
3.0000
4.0000
5.0000
6.0000
7.0000
8.0000
9.0000
10.000
TIME (SECONDS)
SAT, JAN 31 2009 15:41
"NE,NY,NB ANGLE"

2013 WINTER PEAK WITH DSM - DELIVER RESERVE
NS-NB=200; NB-NE=500; CBX=790; ONI=1015 ONS=704
3 PHASE FAULT ON L6003 AT SACKVILLE
RECLOSES FROM SACKVILLE IN 5 SECONDS
FILE: a107-l6003_3ph_rect-2013WP-DSM-NS-200.out
CHNL# 59: [POWR199169] [TUFTCV3 14.400] [3] [ANGL156661]
CHNL# 56: [POWR199086] [TRENTON613.800] [6] [ANGL156661]
CHNL# 55: [POWR199085] [TRENTN5 13.800] [5] [ANGL156661]
CHNL# 54: [POWR199061] [TMP1 STO13.800] [1] [ANGL156661]
CHNL# 52: [POWR199043] [ACONIG1 20.000] [1] [ANGL156661]
CHNL# 50: [POWR199001] [LINGAN1 14.400] [1] [ANGL156661]
2.5000
0.0
-1.500
1.0000
2.0000
3.0000
4.0000
5.0000
6.0000
7.0000
8.0000
9.0000
10.000
TIME (SECONDS)
SAT, JAN 31 2009 15:41
NS MW

2013 WINTER PEAK WITH DSM - DELIVER RESERVE
NS-NB=200; NB-NE=500; CBX=790; ONI=1015 ONS=704
3 PHASE FAULT ON L6003 AT SACKVILLE
RECLOSES FROM SACKVILLE IN 5 SECONDS
FILE: a107-l6003_3ph_rect-2013WP-DSM-NS-200.out
CHNL# 49: [POWER190472] [BLLDNG2 19.000] [1]
CHNL# 45: [POWER190456] [LEPRG1 26.000] [1]
CHNL# 44: [POWER190450] [MACTG1 13.800] [1]
CHNL# 42: [POWER126652] [RAV 3 22.000] [1]
CHNL# 41: [POWER101063] [MYST G7 22.000] [1]
CHNL# 40: [POWER100060] [MIS GT1 18.000] [1]
5.0000
0.0
4.0000
1.0000
2.0000
3.0000
4.0000
5.0000
6.0000
7.0000
8.0000
9.0000
10.000
TIME (SECONDS)
SAT, JAN 31 2009 15:41
"NE,NY,NB POWER"

2013 WINTER PEAK WITH DSM - DELIVER RESERVE
NS-NB=200; NB-NE=500; CBX=790; ONI=1015 ONS=704
3 PHASE FAULT ON L6003 AT SACKVILLE
RECLOSES FROM SACKVILLE IN 5 SECONDS
FILE: a107-l6003_3ph_recl-2013WP-DSM-NS-200.out
CHNL# 119: [VARS IR141-DIGBY]
CHNL# 118: [VARS IR137-STATIA]
CHNL# 117: [VARS IR114-GLENDHU]
CHNL# 116: [VARS IR84-DALHOUSIE]
CHNL# 115: [VARS IR82_NUTTBY]
CHNL# 114: [VARS IR45_AMHERST]
TIME (SECONDS)
SAT, JAN 31 2009 15:41
NS WIND MV

2013 WINTER PEAK WITH DSM - DELIVER RESERVE
NS-NB=200; NB-NE=500; CBX=790; ONI=1015 ONS=704
3 PHASE FAULT ON L6003 AT SACKVILLE
RECLOSES FROM SACKVILLE IN 5 SECONDS
FILE: a107-l6003_3ph_recl-2013WP-DSM-NS-200.out
CHNL# 79: [POWER IR141-DIGBY]
CHNL# 78: [POWER IR137-STATIA]
CHNL# 77: [POWER IR114-GLENDHU]
CHNL# 76: [POWER IR84-DALHOUSIE]
CHNL# 75: [POWER IR82_NUTTBY]
CHNL# 74: [POWER IR45_AMHERST]
TIME (SECONDS)
SAT, JAN 31 2009 15:41
NS WIND MW

2013 WINTER PEAK WITH DSM - DELIVER RESERVE
NS-NB=200; NB-NE=500; CBX=790; ONI=1015 ONS=704
3 PHASE FAULT ON L6003 AT SACKVILLE
RECLOSES FROM SACKVILLE IN 5 SECONDS
FILE: a107-l6003_3ph_recl-2013WP-DSM-NS-200.out
CHNL# 133: [VOLT199125 [ONSLOW 345.00]]
CHNL# 132: [VOLT199120 [HOPEWELL345.00]]
CHNL# 131: [VOLT199045 [WOODBINE345.00]]
CHNL# 130: [VOLT190320 [SALBRY 345.00]]
CHNL# 128: [VOLT190004 [KESWICK 345.00]]
CHNL# 127: [VOLT 70002 [ORRINGTN345.00]]
TIME (SECONDS)
SAT, JAN 31 2009 15:41
"345KV VOLTAGE"

2013 WINTER PEAK WITH DSM - DELIVER RESERVE
NS-NB=200; NB-NE=500; CBX=790; ONI=1015 ONS=704
3 PHASE FAULT ON L6003 AT SACKVILLE
RECLOSES FROM SACKVILLE IN 5 SECONDS
FILE: a107-l6003_3ph_recl-2013WP-DSM-NS-200.out
CHNL# 125: 60*(1+[FREQ199125 [ONSLOW 345.00]])
CHNL# 124: 60*(1+[FREQ199120 [HOPEWELL345.00]])
CHNL# 123: 60*(1+[FREQ199045 [WOODBINE345.00]])
CHNL# 122: 60*(1+[FREQ190320 [SALBRY 345.00]])
CHNL# 121: 60*(1+[FREQ190197 [C.COVE 345.00]])
CHNL# 120: 60*(1+[FREQ 70002 [ORRINGTN345.00]])
TIME (SECONDS)
SAT, JAN 31 2009 15:41
FREQUENCY HZ

2013 WINTER PEAK WITH DSM - DELIVER RESERVE
NS-NB=200; NB-NE=500; CBX=790; ONI=1015 ONS=704
3 PHASE FAULT ON L6003 AT SACKVILLE
RECLOSES FROM SACKVILLE IN 5 SECONDS
FILE: a107-l6003_3ph_recl-2013WP-DSM-NS-200.out
CHNL# 146: [VOLT199280 [TUSKET A138.00]]
CHNL# 145: [VOLT199193 [HHWAS 138.00]]
CHNL# 144: [VOLT199165 [TUFTCOVE138.00]]
CHNL# 143: [VOLT199138: [SPRNGHILL138.00]]
CHNL# 142: [VOLT199090 [50N-TREN138.00]]
CHNL# 141: [VOLT199051 [HASTINGS138.00]]
1.2000
0.70000
0.0
1.0000
2.0000
3.0000
4.0000
5.0000
6.0000
7.0000
8.0000
9.0000
10.000
TIME (SECONDS)
SAT, JAN 31 2009 15:41
138KV BUS VOLTS

2013 WINTER PEAK WITH DSM - DELIVER RESERVE
NS-NB=200; NB-NE=500; CBX=790; ONI=1015 ONS=704
3 PHASE FAULT ON L6003 AT SACKVILLE
RECLOSES FROM SACKVILLE IN 5 SECONDS
FILE: a107-l6003_3ph_recl-2013WP-DSM-NS-200.out
CHNL# 140: [VOLT199240 [BWATER A230.00]]
CHNL# 139: [VOLT199200 [BRUSHY 230.00]]
CHNL# 138: [VOLT199130 [ONSLOW 230.00]]
CHNL# 137: [VOLT199050 [HASTINGS230.00]]
CHNL# 136: [VOLT199044 [PT.ACONI230.00]]
CHNL# 135: [VOLT199000 [LINGAN 230.00]]
1.2000
0.70000
0.0
1.0000
2.0000
3.0000
4.0000
5.0000
6.0000
7.0000
8.0000
9.0000
10.000
TIME (SECONDS)
SAT, JAN 31 2009 15:41
230KV BUS VOLTS

2013 WINTER PEAK WITH DSM - DELIVER RESERVE
NS-NB=200; NB-NE=500; CBX=790; ONI=1015 ONS=704
3 PHASE FAULT ON L6003 AT SACKVILLE
RECLOSES FROM SACKVILLE IN 5 SECONDS
FILE: a107-l6003_3ph_recl-2013WP-DSM-NS-200.out
CHNL# 217: [L6513MW]
CHNL# 215: [L6503MW]
CHNL# 197: [L8003MW]
CHNL# 195: [L8004MW]
CHNL# 193: [L8001MW]
CHNL# 221: [L3001MW]
250.00
-250.0
500.00
0.0
1000.0
-1000.
0.0
1.0000
2.0000
3.0000
4.0000
5.0000
6.0000
7.0000
8.0000
9.0000
10.000
TIME (SECONDS)
SAT, JAN 31 2009 15:41
LINE FLOW MW

2013 WINTER PEAK WITH DSM - DELIVER RESERVE
NS-NB=200; NB-NE=500; CBX=790; ONI=1015 ONS=704
3 PHASE FAULT ON L6003 AT SACKVILLE
RECLOSES FROM SACKVILLE IN 5 SECONDS
FILE: a107-l6003_3ph_recl-2013WP-DSM-NS-200.out
CHNL# 154: [IR141-DIGBYH69.0 VOLTS]
CHNL# 153: [IR137-STATIG25.0 VOLTS]
CHNL# 152: [IR114-GLENDH138.0 VOLTS]
CHNL# 151: [IR84-DALHOHV230.0 VOLTS]
CHNL# 150: [IR82-NUTBHV69.0 VOLTS]
CHNL# 149: [IR45-AMHERTP138.0 VOLTS]
1.2000
0.70000
0.0
1.0000
2.0000
3.0000
4.0000
5.0000
6.0000
7.0000
8.0000
9.0000
10.000
TIME (SECONDS)
SAT, JAN 31 2009 15:41
WIND BUS VOLTS

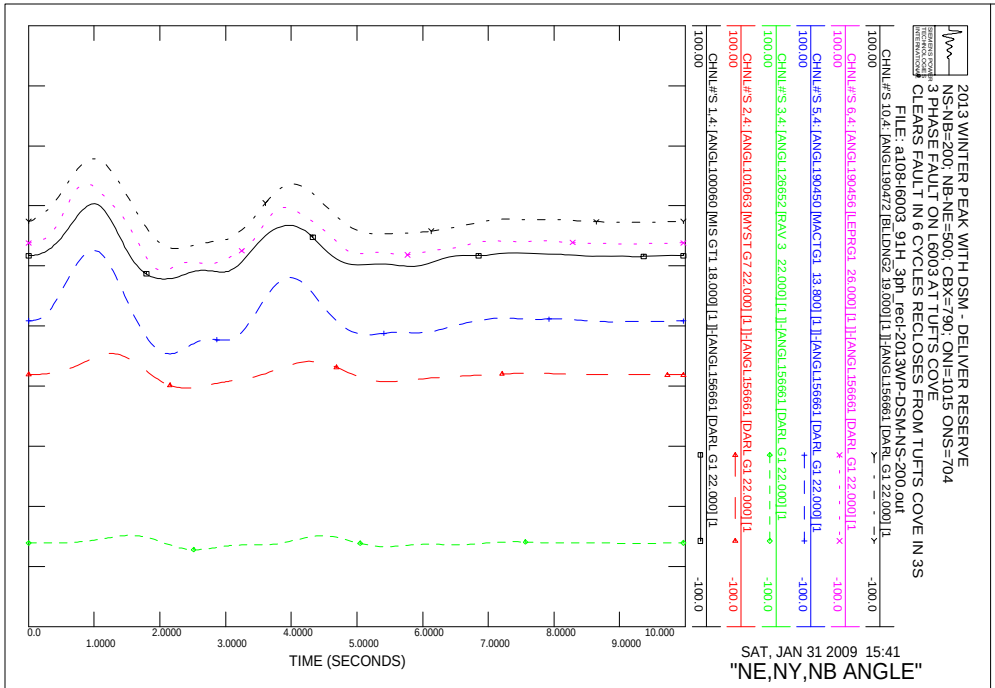
2013 WINTER PEAK WITH DSM - DELIVER RESERVE
NS-NB=200; NB-NE=500; CBX=790; ONI=1015 ONS=704
3 PHASE FAULT ON L6003 AT TUFTS COVE
CLEARS FAULT IN 6 CYCLES RECLOSES FROM TUFTS COVE IN 3S
FILE: a108-l6003_91H_3ph_recl-2013WP-DSM-NS-200.out
CHNL#'S 10,4: [ANGL190472 [BLLDNG2 19.000] [1]]-[ANGL156661 [DARL G1 22.000] [1
CHNL#'S 6,4: [ANGL190456 [LEPRG1 26.000] [1]]-[ANGL156661 [DARL G1 22.000] [1
CHNL#'S 5,4: [ANGL190450 [MACTG1 13.800] [1]]-[ANGL156661 [DARL G1 22.000] [1
CHNL#'S 3,4: [ANGL126652 [RAV 3 22.000] [1]]-[ANGL156661 [DARL G1 22.000] [1
CHNL#'S 2,4: [ANGL101063 [MYST G7 22.000] [1]]-[ANGL156661 [DARL G1 22.000] [1
CHNL#'S 1,4: [ANGL100060 [MIS GT1 18.000] [1]]-[ANGL156661 [DARL G1 22.000] [1
100.00
-100.0
TIME (SECONDS)
SAT, JAN 31 2009 15:41
"NE,NY,NB ANGLE"

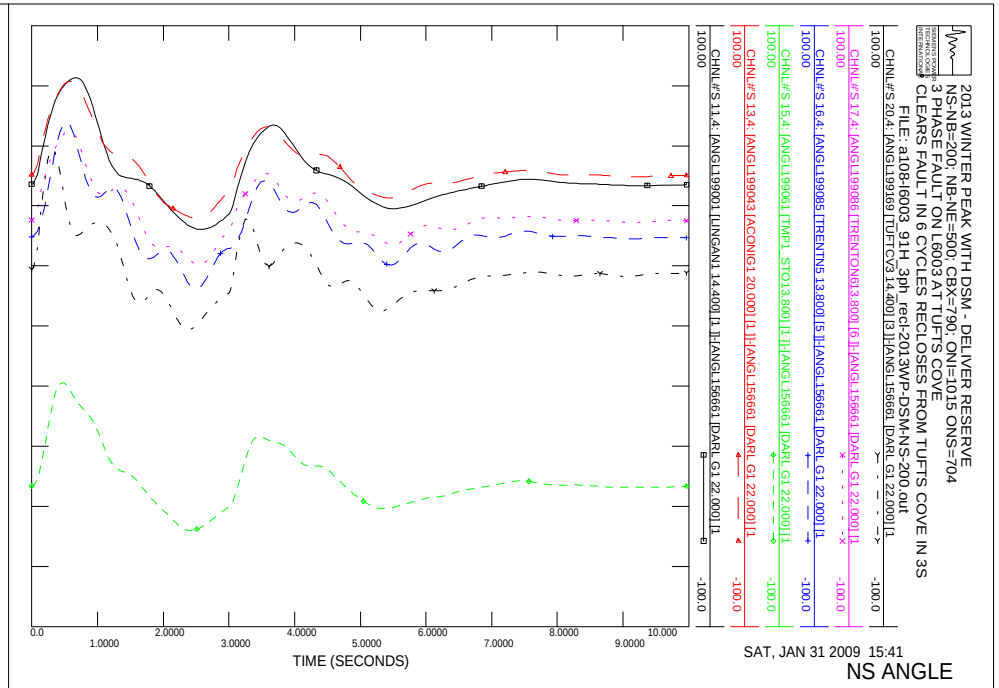
2013 WINTER PEAK WITH DSM - DELIVER RESERVE
NS-NB=200; NB-NE=500; CBX=790; ONI=1015 ONS=704
3 PHASE FAULT ON L6003 AT TUFTS COVE
CLEARS FAULT IN 6 CYCLES RECLOSES FROM TUFTS COVE IN 3S
FILE: a108-l6003_91H_3ph_recl-2013WP-DSM-NS-200.out
CHNL#'S 20,4: [ANGL199169 [TUFTCV3 14.400] [3]]-[ANGL156661 [DARL G1 22.000] [1
CHNL#'S 17,4: [ANGL199086 [TRENTON613.800] [6]]-[ANGL156661 [DARL G1 22.000] [1
CHNL#'S 16,4: [ANGL199085 [TRENTN5 13.800] [5]]-[ANGL156661 [DARL G1 22.000] [1
CHNL#'S 15,4: [ANGL199061 [TMP1 STO13.800] [1]]-[ANGL156661 [DARL G1 22.000] [1
CHNL#'S 13,4: [ANGL199043 [ACONIG1 20.000] [1]]-[ANGL156661 [DARL G1 22.000] [1
CHNL#'S 11,4: [ANGL199001 [LINGAN1 14.400] [1]]-[ANGL156661 [DARL G1 22.000] [1
100.00
-100.0
TIME (SECONDS)
SAT, JAN 31 2009 15:41
NS ANGLE

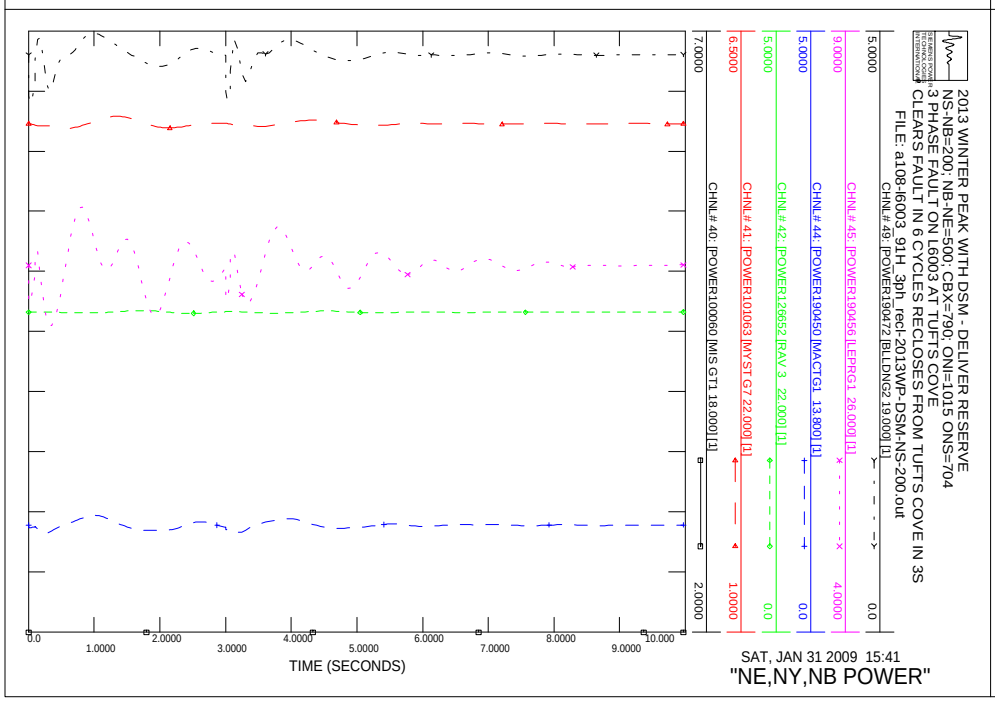
2013 WINTER PEAK WITH DSM - DELIVER RESERVE
NS-NB=200; NB-NE=500; CBX=790; ONI=1015 ONS=704
3 PHASE FAULT ON L6003 AT TUFTS COVE
CLEARS FAULT IN 6 CYCLES RECLOSES FROM TUFTS COVE IN 3S
FILE: a108-l6003_91H_3ph_recl-2013WP-DSM-NS-200.out
CHNL# 49: [POWER190472 [BLLDNG2 19.000] [1]
CHNL# 45: [POWER190456 [LEPRG1 26.000] [1]
CHNL# 44: [POWER190450 [MACTG1 13.800] [1]
CHNL# 42: [POWER126652 [RAV 3 22.000] [1]
CHNL# 41: [POWER101063 [MYST G7 22.000] [1]
CHNL# 40: [POWER100060 [MIS GT1 18.000] [1]
5.0000
0.0
TIME (SECONDS)
SAT, JAN 31 2009 15:41
"NE,NY,NB POWER"

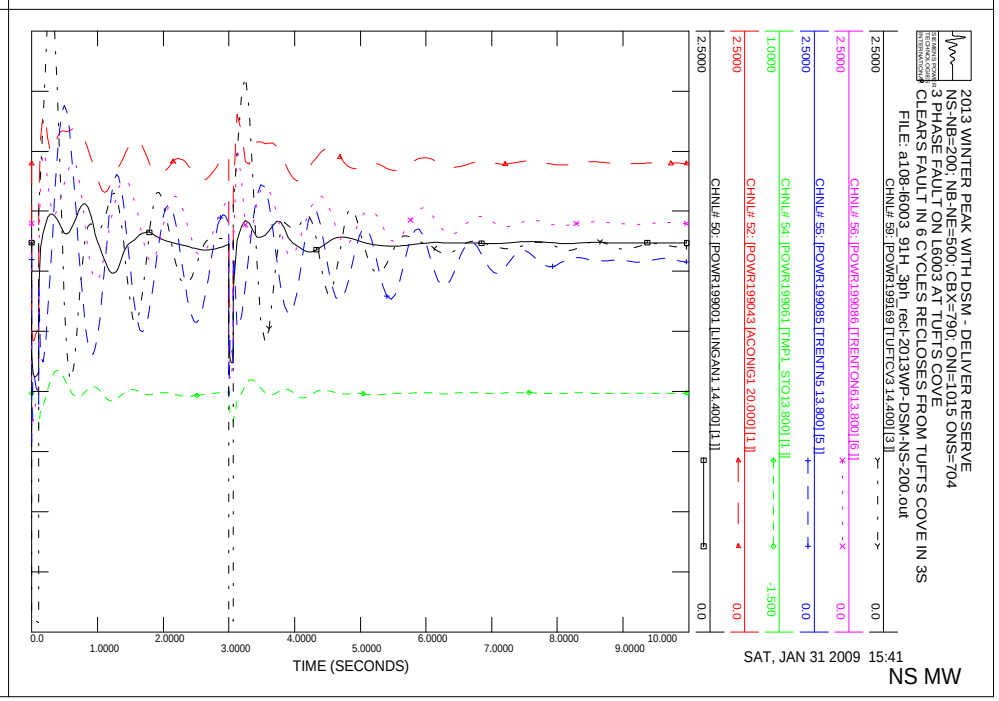
2013 WINTER PEAK WITH DSM - DELIVER RESERVE
NS-NB=200; NB-NE=500; CBX=790; ONI=1015 ONS=704
3 PHASE FAULT ON L6003 AT TUFTS COVE
CLEARS FAULT IN 6 CYCLES RECLOSES FROM TUFTS COVE IN 3S
FILE: a108-l6003_91H_3ph_recl-2013WP-DSM-NS-200.out
CHNL# 59: [POWR199169 [TUFTCV3 14.400] [3]]
CHNL# 56: [POWR199086 [TRENTON613.800] [6]]
CHNL# 55: [POWR199085 [TRENTN5 13.800] [5]]
CHNL# 54: [POWR199061 [TMP1 STO13.800] [1]]
CHNL# 52: [POWR199043 [ACONIG1 20.000] [1]]
CHNL# 50: [POWR199001 [LINGAN1 14.400] [1]]
2.5000
0.0
TIME (SECONDS)
SAT, JAN 31 2009 15:41
NS MW

2013 WINTER PEAK WITH DSM - DELIVER RESERVE
NS-NB=200; NB-NE=500; CBX=790; ONI=1015 ONS=704
3 PHASE FAULT ON L6003 AT TUFTS COVE
CLEARS FAULT IN 6 CYCLES RECLOSES FROM TUFTS COVE IN 3S
FILE: a108-l6003_91H_3ph_recl-2013WP-DSM-NS-200.out
CHNL# 119: [VARS IR141-DIGBY]
CHNL# 118: [VARS IR137-STATIA]
CHNL# 117: [VARS IR114-GLENDHU]
CHNL# 116: [VARS IR84-DALHOUSIE]
CHNL# 115: [VARS IR82_NUTTBY]
CHNL# 114: [VARS IR45_AMHERST]
TIME (SECONDS)
SAT, JAN 31 2009 15:41
NS WIND MV

2013 WINTER PEAK WITH DSM - DELIVER RESERVE
NS-NB=200; NB-NE=500; CBX=790; ONI=1015 ONS=704
3 PHASE FAULT ON L6003 AT TUFTS COVE
CLEARS FAULT IN 6 CYCLES RECLOSES FROM TUFTS COVE IN 3S
FILE: a108-l6003_91H_3ph_recl-2013WP-DSM-NS-200.out
CHNL# 79: [POWER IR141-DIGBY]
CHNL# 78: [POWER IR137-STATIA]
CHNL# 77: [POWER IR114-GLENDHU]
CHNL# 76: [POWER IR84-DALHOUSIE]
CHNL# 75: [POWER IR82_NUTTBY]
CHNL# 74: [POWER IR45_AMHERST]
TIME (SECONDS)
SAT, JAN 31 2009 15:41
NS WIND MW

2013 WINTER PEAK WITH DSM - DELIVER RESERVE
NS-NB=200; NB-NE=500; CBX=790; ONI=1015 ONS=704
3 PHASE FAULT ON L6003 AT TUFTS COVE
CLEARS FAULT IN 6 CYCLES RECLOSES FROM TUFTS COVE IN 3S
FILE: a108-l6003_91H_3ph_recl-2013WP-DSM-NS-200.out
CHNL# 133: [VOLT199125 [ONSLOW 345.00]]
CHNL# 132: [VOLT199120 [HOPEWELL 345.00]]
CHNL# 131: [VOLT199045 [WOODBINE345.00]]
CHNL# 130: [VOLT190320 [SALBRY 345.00]]
CHNL# 128: [VOLT190004 [KESWICK 345.00]]
CHNL# 127: [VOLT 70002 [ORRINGTN345.00]]
TIME (SECONDS)
SAT, JAN 31 2009 15:41
"345KV VOLTAGE"

2013 WINTER PEAK WITH DSM - DELIVER RESERVE
NS-NB=200; NB-NE=500; CBX=790; ONI=1015 ONS=704
3 PHASE FAULT ON L6003 AT TUFTS COVE
CLEARS FAULT IN 6 CYCLES RECLOSES FROM TUFTS COVE IN 3S
FILE: a108-l6003_91H_3ph_recl-2013WP-DSM-NS-200.out
CHNL# 125: 60*(1+[FREQ199125 [ONSLOW 345.00]])
CHNL# 124: 60*(1+[FREQ199120 [HOPEWELL 345.00]])
CHNL# 123: 60*(1+[FREQ199045 [WOODBINE345.00]])
CHNL# 122: 60*(1+[FREQ190320 [SALBRY 345.00]])
CHNL# 121: 60*(1+[FREQ190197 [C.COVE 345.00]])
CHNL# 120: 60*(1+[FREQ 70002 [ORRINGTN345.00]])
TIME (SECONDS)
SAT, JAN 31 2009 15:41
FREQUENCY HZ

2013 WINTER PEAK WITH DSM - DELIVER RESERVE
NS-NB=200; NB-NE=500; CBX=790; ONI=1015 ONS=704
3 PHASE FAULT ON L6003 AT TUFTS COVE
CLEARS FAULT IN 6 CYCLES RECLOSES FROM TUFTS COVE IN 3S
FILE: a108-l6003_91H_3ph_recl-2013WP-DSM-NS-200.out
CHNL# 145: [VOLT199193 [HHWAS_138.00]]
CHNL# 144: [VOLT199165 [TUFTCOVE138.00]]
CHNL# 143: [VOLT199138 [SPRNGHLL138.00]]
CHNL# 142: [VOLT199090 [SON-TREN138.00]]
CHNL# 141: [VOLT199051 [HASTINGS138.00]]
TIME (SECONDS)
SAT, JAN 31 2009 15:41
138KV BUS VOLTS

2013 WINTER PEAK WITH DSM - DELIVER RESERVE
NS-NB=200; NB-NE=500; CBX=790; ONI=1015 ONS=704
3 PHASE FAULT ON L6003 AT TUFTS COVE
CLEARS FAULT IN 6 CYCLES RECLOSES FROM TUFTS COVE IN 3S
FILE: a108-l6003_91H_3ph_recl-2013WP-DSM-NS-200.out
CHNL# 139: [VOLT199200 [BRUSHY_230.00]]
CHNL# 138: [VOLT199130 [ONSLOW_230.00]]
CHNL# 137: [VOLT199050 [HASTINGS230.00]]
CHNL# 136: [VOLT199044 [PT.ACONI230.00]]
CHNL# 135: [VOLT199000 [LINGAN_230.00]]
TIME (SECONDS)
SAT, JAN 31 2009 15:41
230KV BUS VOLTS

2013 WINTER PEAK WITH DSM - DELIVER RESERVE
NS-NB=200; NB-NE=500; CBX=790; ONI=1015 ONS=704
3 PHASE FAULT ON L6003 AT TUFTS COVE
CLEARS FAULT IN 6 CYCLES RECLOSES FROM TUFTS COVE IN 3S
FILE: a108-l6003_91H_3ph_recl-2013WP-DSM-NS-200.out
CHNL# 217: [L6513NMW]
CHNL# 215: [L6503MW]
CHNL# 197: [L8003MW]
CHNL# 195: [L8004MW]
CHNL# 193: [L8001MW]
CHNL# 221: [L3001MW]
TIME (SECONDS)
SAT, JAN 31 2009 15:41
LINE FLOW MW

2013 WINTER PEAK WITH DSM - DELIVER RESERVE
NS-NB=200; NB-NE=500; CBX=790; ONI=1015 ONS=704
3 PHASE FAULT ON L6003 AT TUFTS COVE
CLEARS FAULT IN 6 CYCLES RECLOSES FROM TUFTS COVE IN 3S
FILE: a108-l6003_91H_3ph_recl-2013WP-DSM-NS-200.out
CHNL# 153: [IR137-STATIG25.0 VOLTS]
CHNL# 152: [IR114-GLENDH138.0 VOLTS]
CHNL# 151: [IR84-DALHOHV230.0 VOLTS]
CHNL# 150: [IR82_NUTBHV69.0 VOLTS]
CHNL# 149: [IR45_AMHERTP138.0 VOLTS]
TIME (SECONDS)
SAT, JAN 31 2009 15:41
WIND BUS VOLTS

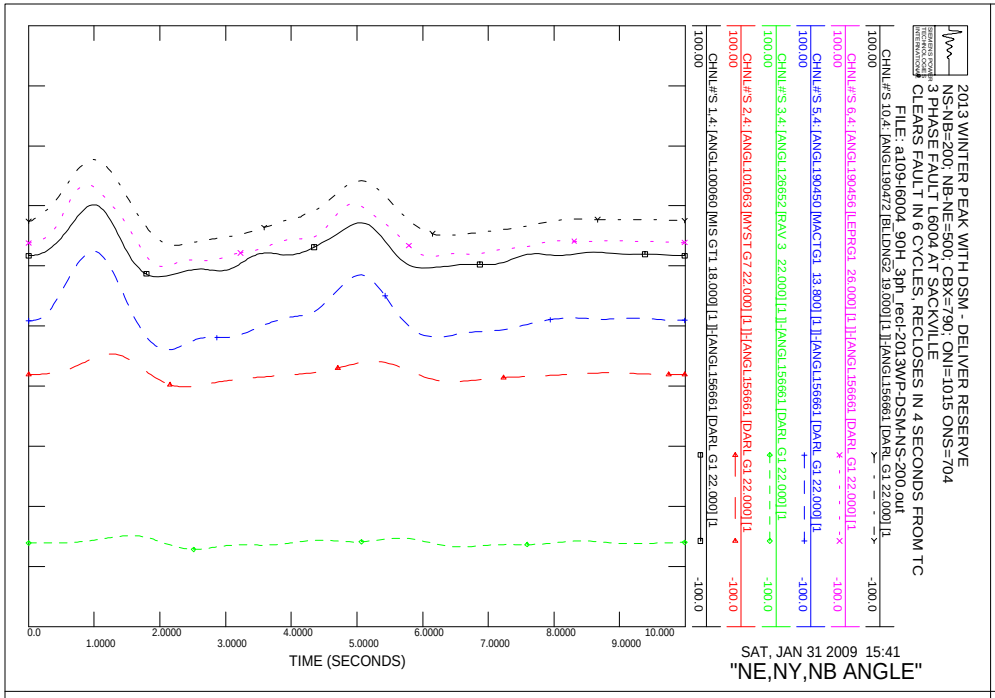
2013 WINTER PEAK WITH DSM - DELIVER RESERVE
NS-NB=200; NB-NE=500; CBX=790; ONI=1015 ONS=704
3 PHASE FAULT L6004 AT SACKVILLE
CLEARS FAULT IN 6 CYCLES, RECLOSES IN 4 SECONDS FROM TC
FILE: a109-l6004_90H_3ph_recl-2013WP-DSM-NS-200.out
CHNL#S 10,4: [ANGL190472 [BLLDNG2 19.000] [1]]-[ANGL156661 [DARL G1 22.000] [1]
CHNL#S 6,4: [ANGL190456 [LEPRG1 26.000] [1]]-[ANGL156661 [DARL G1 22.000] [1]
CHNL#S 5,4: [ANGL190450 [MACTG1 13.800] [1]]-[ANGL156661 [DARL G1 22.000] [1]
CHNL#S 3,4: [ANGL126652 [RAV 3 22.000] [1]]-[ANGL156661 [DARL G1 22.000] [1]
CHNL#S 2,4: [ANGL101063 [MYST G7 22.000] [1]]-[ANGL156661 [DARL G1 22.000] [1]
CHNL#S 1,4: [ANGL100060 [MIS GT1 18.000] [1]]-[ANGL156661 [DARL G1 22.000] [1]
100.00
-100.0
TIME (SECONDS)
SAT, JAN 31 2009 15:41
"NE,NY,NB ANGLE"

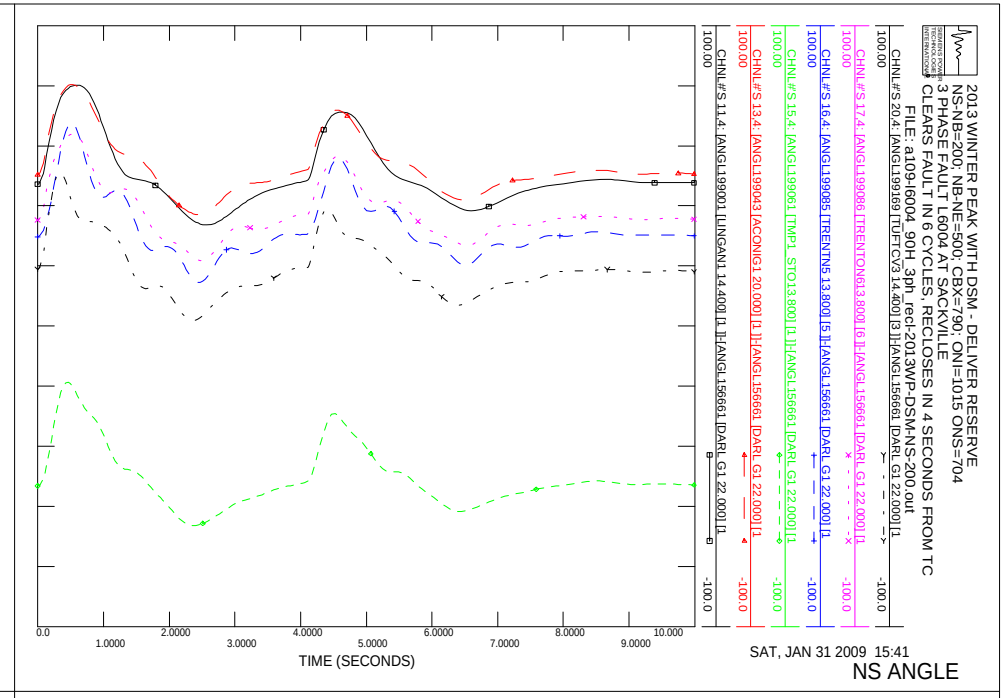
2013 WINTER PEAK WITH DSM - DELIVER RESERVE
NS-NB=200; NB-NE=500; CBX=790; ONI=1015 ONS=704
3 PHASE FAULT L6004 AT SACKVILLE
CLEARS FAULT IN 6 CYCLES, RECLOSES IN 4 SECONDS FROM TC
FILE: a109-l6004_90H_3ph_recl-2013WP-DSM-NS-200.out
CHNL#S 20,4: [ANGL199169 [TUFTCV3 14.400] [3]]-[ANGL156661 [DARL G1 22.000] [1]
CHNL#S 17,4: [ANGL199086 [TRENTON613.800] [6]]-[ANGL156661 [DARL G1 22.000] [1]
CHNL#S 16,4: [ANGL199085 [TRENTN5 13.800] [5]]-[ANGL156661 [DARL G1 22.000] [1]
CHNL#S 15,4: [ANGL199061 [TMP1 STO13.800] [1]]-[ANGL156661 [DARL G1 22.000] [1]
CHNL#S 13,4: [ANGL199043 [ACONIG1 20.000] [1]]-[ANGL156661 [DARL G1 22.000] [1]
CHNL#S 11,4: [ANGL199001 [LINGAN1 14.400] [1]]-[ANGL156661 [DARL G1 22.000] [1]
100.00
-100.0
TIME (SECONDS)
SAT, JAN 31 2009 15:41
NS ANGLE

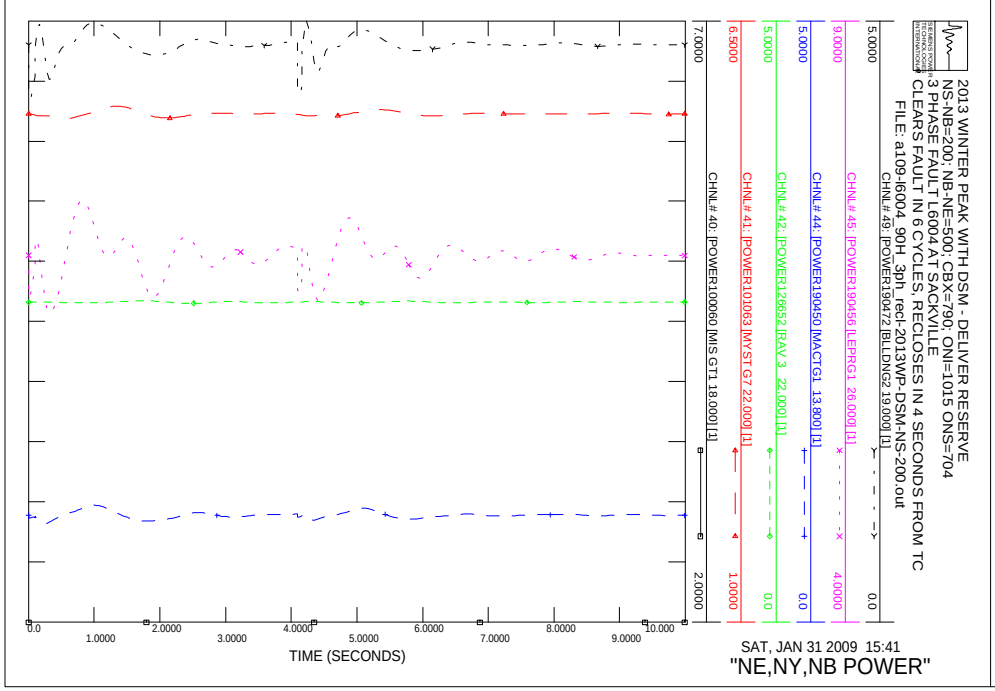
2013 WINTER PEAK WITH DSM - DELIVER RESERVE
NS-NB=200; NB-NE=500; CBX=790; ONI=1015 ONS=704
3 PHASE FAULT L6004 AT SACKVILLE
CLEARS FAULT IN 6 CYCLES, RECLOSES IN 4 SECONDS FROM TC
FILE: a109-l6004_90H_3ph_recl-2013WP-DSM-NS-200.out
CHNL# 49: [POWER190472 [BLLDNG2 19.000] [1]
CHNL# 45: [POWER190456 [LEPRG1 26.000] [1]
CHNL# 44: [POWER190450 [MACTG1 13.800] [1]
CHNL# 42: [POWER126652 [RAV 3 22.000] [1]
CHNL# 41: [POWER101063 [MYST G7 22.000] [1]
CHNL# 40: [POWER100060 [MIS GT1 18.000] [1]
5.0000
0.0
TIME (SECONDS)
SAT, JAN 31 2009 15:41
"NE,NY,NB POWER"

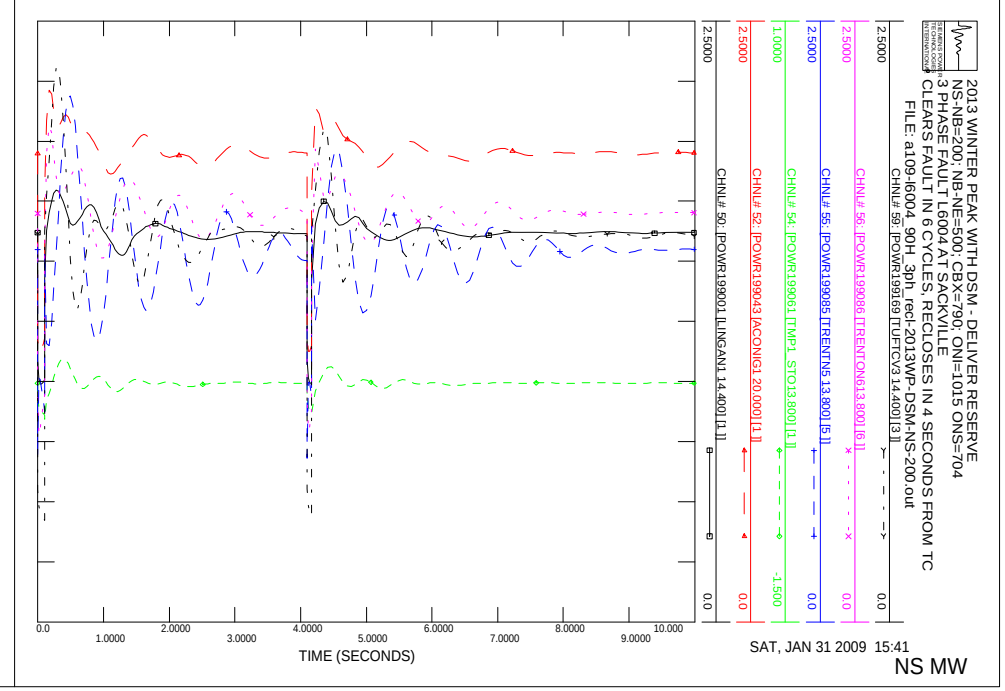
2013 WINTER PEAK WITH DSM - DELIVER RESERVE
NS-NB=200; NB-NE=500; CBX=790; ONI=1015 ONS=704
3 PHASE FAULT L6004 AT SACKVILLE
CLEARS FAULT IN 6 CYCLES, RECLOSES IN 4 SECONDS FROM TC
FILE: a109-l6004_90H_3ph_recl-2013WP-DSM-NS-200.out
CHNL# 59: [POWR199169 [TUFTCV3 14.400] [3]]
CHNL# 56: [POWR199086 [TRENTON613.800] [6]]
CHNL# 55: [POWR199085 [TRENTN5 13.800] [5]]
CHNL# 54: [POWR199061 [TMP1 STO13.800] [1]]
CHNL# 52: [POWR199043 [ACONIG1 20.000] [1]]
CHNL# 50: [POWR199001 [LINGAN1 14.400] [1]]
2.5000
0.0
TIME (SECONDS)
SAT, JAN 31 2009 15:41
NS MW

2013 WINTER PEAK WITH DSM - DELIVER RESERVE
NS-NB=200; NB-NE=500; CBX=790; ONI=1015 ONS=704
3 PHASE FAULT L6004 AT SACKVILLE
CLEARS FAULT IN 6 CYCLES, RECLOSES IN 4 SECONDS FROM TC
FILE: a109-l6004_90H_3ph_recl-2013WP-DSM-NS-200.out
CHNL# 119: [VARS IR141-DIGBY]
CHNL# 118: [VARS IR137-STATIA]
CHNL# 117: [VARS IR114-GLENDHU]
CHNL# 116: [VARS IR84-DALHOUSIE]
CHNL# 115: [VARS IR82_NUTTBY]
CHNL# 114: [VARS IR45_AMHERST]
TIME (SECONDS)
SAT, JAN 31 2009 15:41
NS WIND MV

2013 WINTER PEAK WITH DSM - DELIVER RESERVE
NS-NB=200; NB-NE=500; CBX=790; ONI=1015 ONS=704
3 PHASE FAULT L6004 AT SACKVILLE
CLEARS FAULT IN 6 CYCLES, RECLOSES IN 4 SECONDS FROM TC
FILE: a109-l6004_90H_3ph_recl-2013WP-DSM-NS-200.out
CHNL# 79: [POWER IR141-DIGBY]
CHNL# 78: [POWER IR137-STATIA]
CHNL# 77: [POWER IR114-GLENDHU]
CHNL# 76: [POWER IR84-DALHOUSIE]
CHNL# 75: [POWER IR82_NUTTBY]
CHNL# 74: [POWER IR45_AMHERST]
TIME (SECONDS)
SAT, JAN 31 2009 15:41
NS WIND MW

2013 WINTER PEAK WITH DSM - DELIVER RESERVE
NS-NB=200; NB-NE=500; CBX=790; ONI=1015 ONS=704
3 PHASE FAULT L6004 AT SACKVILLE
CLEARS FAULT IN 6 CYCLES, RECLOSES IN 4 SECONDS FROM TC
FILE: a109-l6004_90H_3ph_recl-2013WP-DSM-NS-200.out
CHNL# 133: [VOLT199125 [ONSLOW 345.00]]
CHNL# 132: [VOLT199120 [HOPEWELL345.00]]
CHNL# 131: [VOLT199045 [WOODBINE345.00]]
CHNL# 130: [VOLT190320 [SALBRY 345.00]]
CHNL# 128: [VOLT190004 [KESWICK 345.00]]
CHNL# 127: [VOLT 70002 [ORRINGTN345.00]]
TIME (SECONDS)
SAT, JAN 31 2009 15:41
"345KV VOLTAGE"

2013 WINTER PEAK WITH DSM - DELIVER RESERVE
NS-NB=200; NB-NE=500; CBX=790; ONI=1015 ONS=704
3 PHASE FAULT L6004 AT SACKVILLE
CLEARS FAULT IN 6 CYCLES, RECLOSES IN 4 SECONDS FROM TC
FILE: a109-l6004_90H_3ph_recl-2013WP-DSM-NS-200.out
CHNL# 125: 60*(1+[FREQ199125 [ONSLOW 345.00]])
CHNL# 124: 60*(1+[FREQ199120 [HOPEWELL345.00]])
CHNL# 123: 60*(1+[FREQ199045 [WOODBINE345.00]])
CHNL# 122: 60*(1+[FREQ190320 [SALBRY 345.00]])
CHNL# 121: 60*(1+[FREQ190197 [C.COVE 345.00]])
CHNL# 120: 60*(1+[FREQ 70002 [ORRINGTN345.00]])
TIME (SECONDS)
SAT, JAN 31 2009 15:41
FREQUENCY HZ

2013 WINTER PEAK WITH DSM - DELIVER RESERVE
NS-NB=200; NB-NE=500; CBX=790; ONI=1015 ONS=704
3 PHASE FAULT L6004 AT SACKVILLE
CLEARS FAULT IN 6 CYCLES, RECLOSES IN 4 SECONDS FROM TC
FILE: a109-l6004_90H_3ph_recl-2013WP-DSM-NS-200.out
CHNL# 146: [VOLT199280 [TUSKET A138.00]]
CHNL# 145: [VOLT199193 [HHWAS 138.00]]
CHNL# 144: [VOLT199165 [TUFTCOVE138.00]]
CHNL# 143: [VOLT199138: [SPRNGHILL138.00]]
CHNL# 142: [VOLT199090 [SON-TREN138.00]]
CHNL# 141: [VOLT199051 [HASTINGS138.00]]
1.2000
0.70000
0.0
1.0000
2.0000
3.0000
4.0000
5.0000
6.0000
7.0000
8.0000
9.0000
10.000
TIME (SECONDS)
SAT, JAN 31 2009 15:41
138KV BUS VOLTS

2013 WINTER PEAK WITH DSM - DELIVER RESERVE
NS-NB=200; NB-NE=500; CBX=790; ONI=1015 ONS=704
3 PHASE FAULT L6004 AT SACKVILLE
CLEARS FAULT IN 6 CYCLES, RECLOSES IN 4 SECONDS FROM TC
FILE: a109-l6004_90H_3ph_recl-2013WP-DSM-NS-200.out
CHNL# 140: [VOLT199240 [BWATER A230.00]]
CHNL# 139: [VOLT199200 [BRUSHY 230.00]]
CHNL# 138: [VOLT199130 [ONSLOW 230.00]]
CHNL# 137: [VOLT199050 [HASTINGS230.00]]
CHNL# 136: [VOLT199044 [PT.ACONI230.00]]
CHNL# 135: [VOLT199000 [LINGAN 230.00]]
1.2000
0.70000
0.0
1.0000
2.0000
3.0000
4.0000
5.0000
6.0000
7.0000
8.0000
9.0000
10.000
TIME (SECONDS)
SAT, JAN 31 2009 15:41
230KV BUS VOLTS

2013 WINTER PEAK WITH DSM - DELIVER RESERVE
NS-NB=200; NB-NE=500; CBX=790; ONI=1015 ONS=704
3 PHASE FAULT L6004 AT SACKVILLE
CLEARS FAULT IN 6 CYCLES, RECLOSES IN 4 SECONDS FROM TC
FILE: a109-l6004_90H_3ph_recl-2013WP-DSM-NS-200.out
CHNL# 217: [L6533MW]
CHNL# 215: [L6503MW]
CHNL# 197: [L8003MW]
CHNL# 195: [L8004MW]
CHNL# 193: [L8001MW]
CHNL# 221: [L3001MW]
250.00
-250.0
500.00
0.0
1000.0
-1000.
0.0
1.0000
2.0000
3.0000
4.0000
5.0000
6.0000
7.0000
8.0000
9.0000
10.000
TIME (SECONDS)
SAT, JAN 31 2009 15:41
LINE FLOW MW

2013 WINTER PEAK WITH DSM - DELIVER RESERVE
NS-NB=200; NB-NE=500; CBX=790; ONI=1015 ONS=704
3 PHASE FAULT L6004 AT SACKVILLE
CLEARS FAULT IN 6 CYCLES, RECLOSES IN 4 SECONDS FROM TC
FILE: a109-l6004_90H_3ph_recl-2013WP-DSM-NS-200.out
CHNL# 154: [IR141-DIGBYH69.0 VOLTS]
CHNL# 153: [IR137-STATIG25.0 VOLTS]
CHNL# 152: [IR114-GLENDH138.0 VOLTS]
CHNL# 151: [IR84-DALHOHV230.0 VOLTS]
CHNL# 150: [IR82 NUTBHV69.0 VOLTS]
CHNL# 149: [IR45 AMHERTP138.0 VOLTS]
1.2000
0.70000
0.0
1.0000
2.0000
3.0000
4.0000
5.0000
6.0000
7.0000
8.0000
9.0000
10.000
TIME (SECONDS)
SAT, JAN 31 2009 15:41
WIND BUS VOLTS

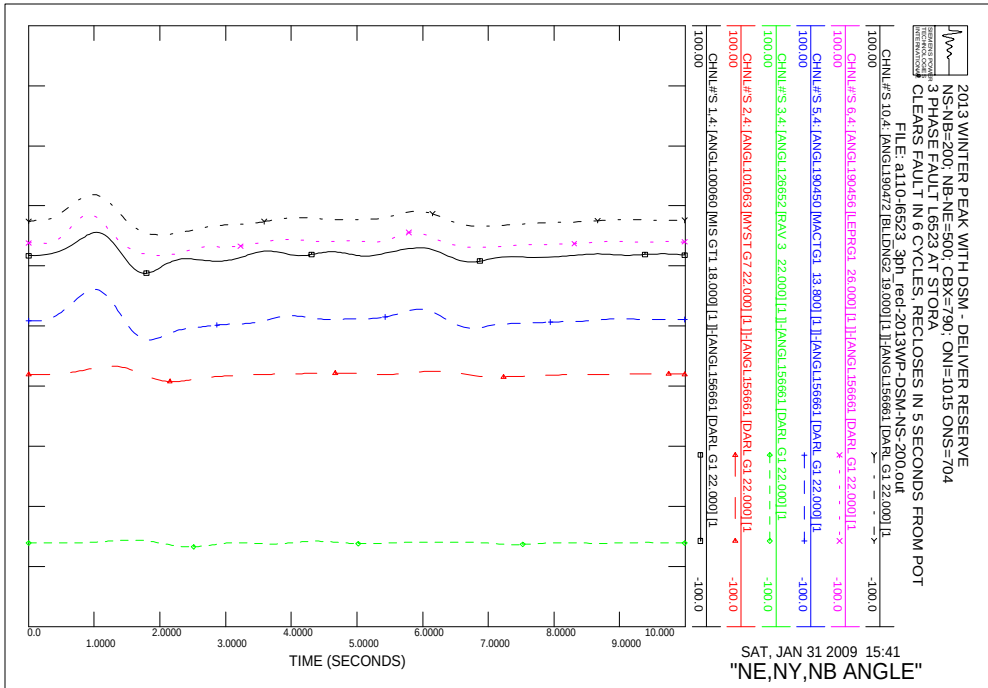
2013 WINTER PEAK WITH DSM - DELIVER RESERVE
NS-NB=200; NB-NE=500; CBX=790; ONI=1015 ONS=704
3 PHASE FAULT L6523 AT STORA
CLEARS FAULT IN 6 CYCLES, RECLOSES IN 5 SECONDS FROM POT
FILE: a110-l6523_3ph_rect-2013WP-DSM-NS-200.out
CHNL#'S 10,4: [ANGL190472 [BLLDNG2 19.000] [1]]-[ANGL156661 [DARL G1 22.000] [1
CHNL#'S 6,4: [ANGL190456 [LEPRG1 26.000] [1]]-[ANGL156661 [DARL G1 22.000] [1
CHNL#'S 5,4: [ANGL190450 [MACTG1 13.800] [1]]-[ANGL156661 [DARL G1 22.000] [1
CHNL#'S 3,4: [ANGL126652 [RAV 3 22.000] [1]]-[ANGL156661 [DARL G1 22.000] [1
CHNL#'S 2,4: [ANGL101063 [MYST G7 22.000] [1]]-[ANGL156661 [DARL G1 22.000] [1
CHNL#'S 1,4: [ANGL100060 [MIS GT1 18.000] [1]]-[ANGL156661 [DARL G1 22.000] [1
100.00
-100.0
TIME (SECONDS)
SAT, JAN 31 2009 15:41
"NE,NY,NB ANGLE"

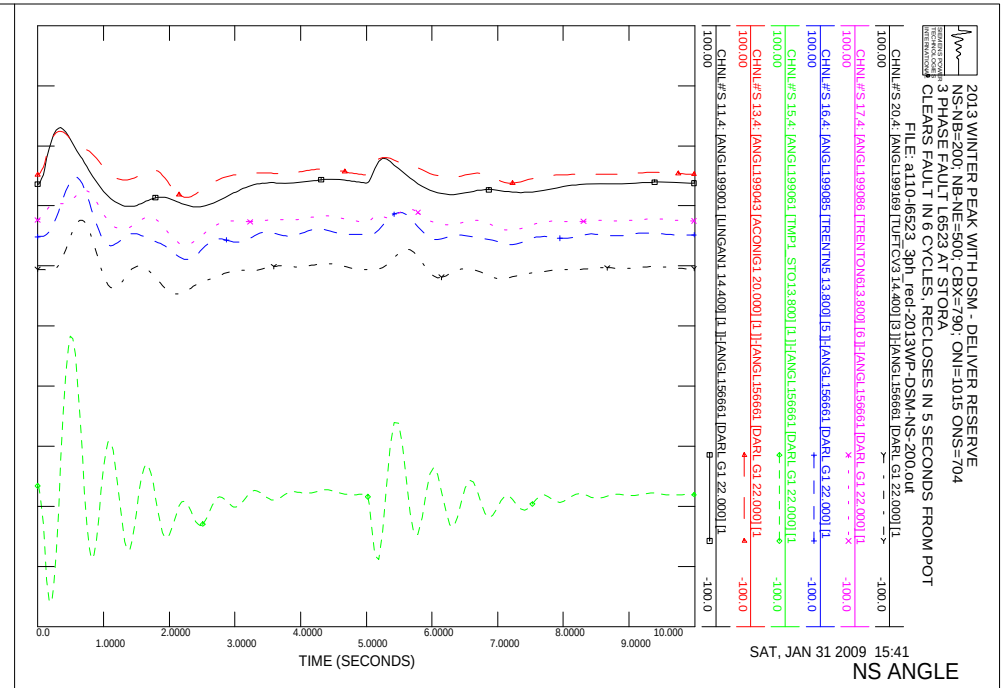
2013 WINTER PEAK WITH DSM - DELIVER RESERVE
NS-NB=200; NB-NE=500; CBX=790; ONI=1015 ONS=704
3 PHASE FAULT L6523 AT STORA
CLEARS FAULT IN 6 CYCLES, RECLOSES IN 5 SECONDS FROM POT
FILE: a110-l6523_3ph_rect-2013WP-DSM-NS-200.out
CHNL#'S 20,4: [ANGL199169 [TUFTCV3 14.400] [3]]-[ANGL156661 [DARL G1 22.000] [1
CHNL#'S 17,4: [ANGL199086 [TRENTON613.800] [6]]-[ANGL156661 [DARL G1 22.000] [1
CHNL#'S 16,4: [ANGL199085 [TRENTN5 13.800] [5]]-[ANGL156661 [DARL G1 22.000] [1
CHNL#'S 15,4: [ANGL199061 [TMP1 STO13.800] [1]]-[ANGL156661 [DARL G1 22.000] [1
CHNL#'S 13,4: [ANGL199043 [ACONIG1 20.000] [1]]-[ANGL156661 [DARL G1 22.000] [1
CHNL#'S 11,4: [ANGL199001 [LINGAN1 14.400] [1]]-[ANGL156661 [DARL G1 22.000] [1
100.00
-100.0
TIME (SECONDS)
SAT, JAN 31 2009 15:41
NS ANGLE

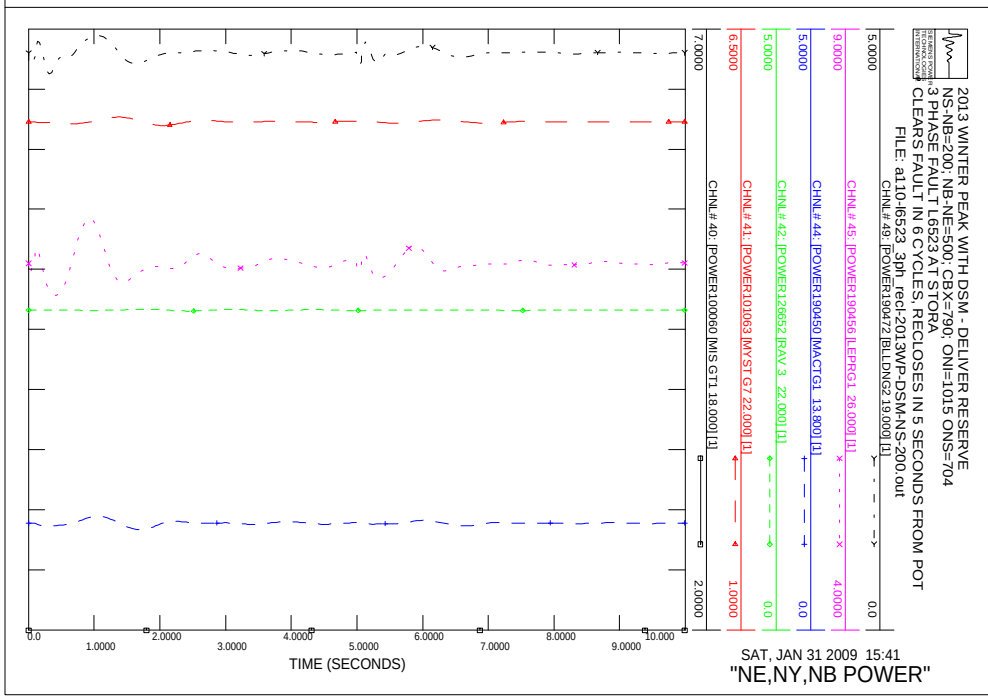
2013 WINTER PEAK WITH DSM - DELIVER RESERVE
NS-NB=200; NB-NE=500; CBX=790; ONI=1015 ONS=704
3 PHASE FAULT L6523 AT STORA
CLEARS FAULT IN 6 CYCLES, RECLOSES IN 5 SECONDS FROM POT
FILE: a110-l6523_3ph_rect-2013WP-DSM-NS-200.out
CHNL# 49: [POWER190472 [BLLDNG2 19.000] [1]]
CHNL# 45: [POWER190456 [LEPRG1 26.000] [1]]
CHNL# 44: [POWER190450 [MACTG1 13.800] [1]]
CHNL# 42: [POWER126652 [RAV 3 22.000] [1]]
CHNL# 41: [POWER101063 [MYST G7 22.000] [1]]
CHNL# 40: [POWER100060 [MIS GT1 18.000] [1]]
5.0000
0.0
4.0000
6.5000
1.0000
7.0000
2.0000
TIME (SECONDS)
SAT, JAN 31 2009 15:41
"NE,NY,NB POWER"

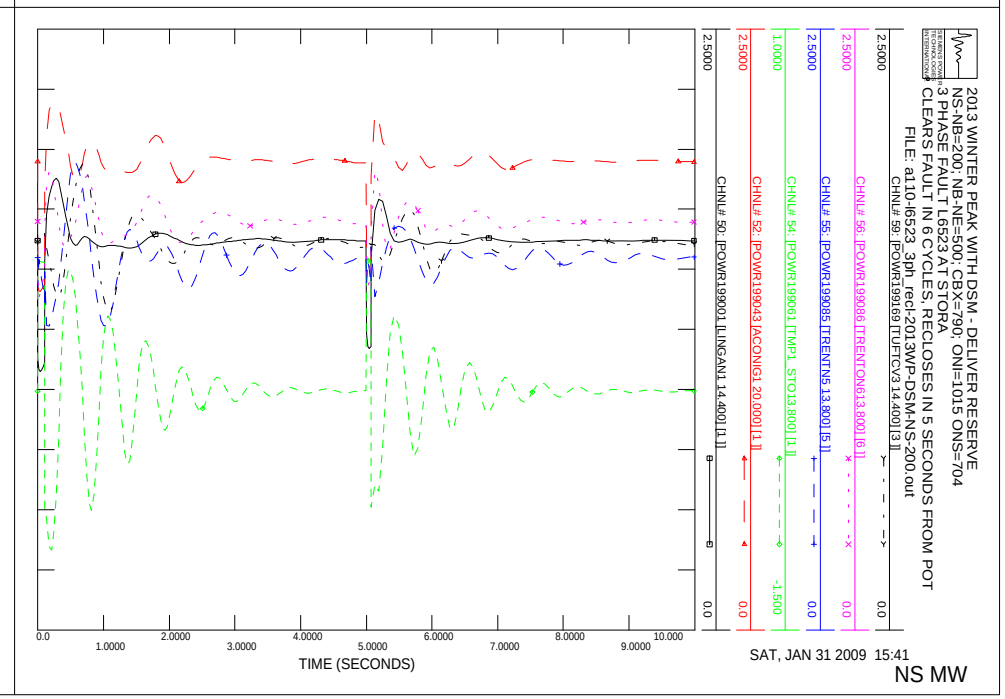
2013 WINTER PEAK WITH DSM - DELIVER RESERVE
NS-NB=200; NB-NE=500; CBX=790; ONI=1015 ONS=704
3 PHASE FAULT L6523 AT STORA
CLEARS FAULT IN 6 CYCLES, RECLOSES IN 5 SECONDS FROM POT
FILE: a110-l6523_3ph_rect-2013WP-DSM-NS-200.out
CHNL# 59: [POWR199169 [TUFTCV3 14.400] [3]]
CHNL# 56: [POWR199086 [TRENTON613.800] [6]]
CHNL# 55: [POWR199085 [TRENTN5 13.800] [5]]
CHNL# 54: [POWR199061 [TMP1 STO13.800] [1]]
CHNL# 52: [POWR199043 [ACONIG1 20.000] [1]]
CHNL# 50: [POWR199001 [LINGAN1 14.400] [1]]
2.5000
0.0
-1.500
1.0000
TIME (SECONDS)
SAT, JAN 31 2009 15:41
NS MW

2013 WINTER PEAK WITH DSM - DELIVER RESERVE
NS-NB=200; NB-NE=500; CBX=790; ONI=1015 ONS=704
3 PHASE FAULT L6523 AT STORA
CLEARS FAULT IN 6 CYCLES, RECLOSES IN 5 SECONDS FROM POT
FILE: a110-l6523_3ph_recl-2013WP-DSM-NS-200.out
CHNL# 119: [VARS IR141-DIGBY]
CHNL# 118: [VARS IR137-STATIA]
CHNL# 117: [VARS IR114-GLENDHU]
CHNL# 116: [VARS IR84-DALHOUSIE]
CHNL# 115: [VARS IR82_NUTTBY]
CHNL# 114: [VARS IR45_AMHERST]
TIME (SECONDS)
SAT, JAN 31 2009 15:41
NS WIND MV

2013 WINTER PEAK WITH DSM - DELIVER RESERVE
NS-NB=200; NB-NE=500; CBX=790; ONI=1015 ONS=704
3 PHASE FAULT L6523 AT STORA
CLEARS FAULT IN 6 CYCLES, RECLOSES IN 5 SECONDS FROM POT
FILE: a110-l6523_3ph_recl-2013WP-DSM-NS-200.out
CHNL# 79: [POWER IR141-DIGBY]
CHNL# 78: [POWER IR137-STATIA]
CHNL# 77: [POWER IR114-GLENDHU]
CHNL# 76: [POWER IR84-DALHOUSIE]
CHNL# 75: [POWER IR82_NUTTBY]
CHNL# 74: [POWER IR45_AMHERST]
TIME (SECONDS)
SAT, JAN 31 2009 15:41
NS WIND MW

2013 WINTER PEAK WITH DSM - DELIVER RESERVE
NS-NB=200; NB-NE=500; CBX=790; ONI=1015 ONS=704
3 PHASE FAULT L6523 AT STORA
CLEARS FAULT IN 6 CYCLES, RECLOSES IN 5 SECONDS FROM POT
FILE: a110-l6523_3ph_recl-2013WP-DSM-NS-200.out
CHNL# 133: [VOLT199125 IONSLOW 345.00]
CHNL# 132: [VOLT199120 [HOPEWELL 345.00]
CHNL# 131: [VOLT199045 [WOODBINE345.00]]
CHNL# 130: [VOLT190320 [SALBRY 345.00]]
CHNL# 128: [VOLT190004 [KESWICK 345.00]]
CHNL# 127: [VOLT 70002 [ORRINGTN345.00]]
TIME (SECONDS)
SAT, JAN 31 2009 15:41
"345KV VOLTAGE"

2013 WINTER PEAK WITH DSM - DELIVER RESERVE
NS-NB=200; NB-NE=500; CBX=790; ONI=1015 ONS=704
3 PHASE FAULT L6523 AT STORA
CLEARS FAULT IN 6 CYCLES, RECLOSES IN 5 SECONDS FROM POT
FILE: a110-l6523_3ph_recl-2013WP-DSM-NS-200.out
CHNL# 125: 60*(1+[FREQ199125 [ONSLOW 345.00]])
CHNL# 124: 60*(1+[FREQ199120 [HOPEWELL 345.00]])
CHNL# 123: 60*(1+[FREQ199045 [WOODBINE345.00]])
CHNL# 122: 60*(1+[FREQ190320 [SALBRY 345.00]])
CHNL# 121: 60*(1+[FREQ190197 [C.COVE 345.00]])
CHNL# 120: 60*(1+[FREQ 70002 [ORRINGTN345.00]])
TIME (SECONDS)
SAT, JAN 31 2009 15:41
FREQUENCY HZ

2013 WINTER PEAK WITH DSM - DELIVER RESERVE
NS-NB=200; NB-NE=500; CBX=790; ONI=1015 ONS=704
3 PHASE FAULT L6523 AT STORA
CLEARS FAULT IN 6 CYCLES, RECLOSES IN 5 SECONDS FROM POT
FILE: a110-l6523_3ph_recl-2013WP-DSM-NS-200.out
CHNL# 146: [VOLT199280 [TUSKET A138.00]]
CHNL# 145: [VOLT199193 [HHWAS 138.00]]
CHNL# 144: [VOLT199165 [TUFTCOVE138.00]]
CHNL# 143: [VOLT199138: [SPRNGHILL138.00]]
CHNL# 142: [VOLT199090 [SON-TREN138.00]]
CHNL# 141: [VOLT199051 [HASTINGS138.00]]
1.2000
0.70000
0.0
1.0000
2.0000
3.0000
4.0000
5.0000
6.0000
7.0000
8.0000
9.0000
10.000
TIME (SECONDS)
SAT, JAN 31 2009 15:41
138KV BUS VOLTS

2013 WINTER PEAK WITH DSM - DELIVER RESERVE
NS-NB=200; NB-NE=500; CBX=790; ONI=1015 ONS=704
3 PHASE FAULT L6523 AT STORA
CLEARS FAULT IN 6 CYCLES, RECLOSES IN 5 SECONDS FROM POT
FILE: a110-l6523_3ph_recl-2013WP-DSM-NS-200.out
CHNL# 140: [VOLT199240 [BWATER A230.00]]
CHNL# 139: [VOLT199200 [BRUSHY 230.00]]
CHNL# 138: [VOLT199130 [ONSLOW 230.00]]
CHNL# 137: [VOLT199050 [HASTINGS230.00]]
CHNL# 136: [VOLT199044 [PT.ACONI230.00]]
CHNL# 135: [VOLT199000 [LINGAN 230.00]]
1.2000
0.70000
0.0
1.0000
2.0000
3.0000
4.0000
5.0000
6.0000
7.0000
8.0000
9.0000
10.000
TIME (SECONDS)
SAT, JAN 31 2009 15:41
230KV BUS VOLTS

2013 WINTER PEAK WITH DSM - DELIVER RESERVE
NS-NB=200; NB-NE=500; CBX=790; ONI=1015 ONS=704
3 PHASE FAULT L6523 AT STORA
CLEARS FAULT IN 6 CYCLES, RECLOSES IN 5 SECONDS FROM POT
FILE: a110-l6523_3ph_recl-2013WP-DSM-NS-200.out
CHNL# 217: [L6513kMW]
CHNL# 215: [L6503MW]
CHNL# 197: [L8003MW]
CHNL# 195: [L8004MW]
CHNL# 193: [L8001MW]
CHNL# 221: [L3001MW]
250.00
-250.0
500.00
0.0
1000.0
-1000.
TIME (SECONDS)
SAT, JAN 31 2009 15:41
LINE FLOW MW

2013 WINTER PEAK WITH DSM - DELIVER RESERVE
NS-NB=200; NB-NE=500; CBX=790; ONI=1015 ONS=704
3 PHASE FAULT L6523 AT STORA
CLEARS FAULT IN 6 CYCLES, RECLOSES IN 5 SECONDS FROM POT
FILE: a110-l6523_3ph_recl-2013WP-DSM-NS-200.out
CHNL# 154: [IR141-DIGBYH69.0 VOLTS]
CHNL# 153: [IR137-STATIG25.0 VOLTS]
CHNL# 152: [IR114-GLENDH138.0 VOLTS]
CHNL# 151: [IR84-DALHOHV230.0 VOLTS]
CHNL# 150: [IR82 NUTBHV69.0 VOLTS]
CHNL# 149: [IR45 AMHERTP138.0 VOLTS]
1.2000
0.70000
0.0
1.0000
2.0000
3.0000
4.0000
5.0000
6.0000
7.0000
8.0000
9.0000
10.000
TIME (SECONDS)
SAT, JAN 31 2009 15:41
WIND BUS VOLTS

2013 WINTER PEAK WITH DSM - DELIVER RESERVE
NS-NB=200; NB-NE=500; CBX=790; ONI=1015 ONS=704
3 PHASE FAULT L5049 AT 91H-TUFTS COVE69KV
CLEARS FAULT IN 9 CYCLES, NO RECLOSE
FILE: a112-I5049_3ph_nrecl-2013WP-DSM-NS-200.out
CHNL#S 20:4 [ANGL199169 [TUFTCV3 14.400] [3]] [ANGL156661 [DARL G1 22.000] [1
CHNL#S 17:4 [ANGL199086 [TRENTON613.800] [6]] [ANGL156661 [DARL G1 22.000] [1
CHNL#S 16:4 [ANGL199085 [TRENTN5 13.800] [5]] [ANGL156661 [DARL G1 22.000] [1
CHNL#S 15:4 [ANGL199061 [TMP1 STO13.800] [1]] [ANGL156661 [DARL G1 22.000] [1
CHNL#S 13:4 [ANGL199043 [ACONIG1 20.000] [1]] [ANGL156661 [DARL G1 22.000] [1
CHNL#S 11:4 [ANGL199001 [LINGAN1 14.400] [1]] [ANGL156661 [DARL G1 22.000] [1
100.00
-100.0
0.0
1.0000
2.0000
3.0000
4.0000
5.0000
6.0000
7.0000
8.0000
9.0000
10.000
TIME (SECONDS)
SAT, JAN 31 2009 15:41
NS ANGLE

2013 WINTER PEAK WITH DSM - DELIVER RESERVE
NS-NB=200; NB-NE=500; CBX=790; ONI=1015 ONS=704
3 PHASE FAULT L5049 AT 91H-TUFTS COVE69KV
CLEARS FAULT IN 9 CYCLES, NO RECLOSE
FILE: a112-I5049_3ph_nrecl-2013WP-DSM-NS-200.out
CHNL#S 10:4 [ANGL190472 [BLLDNG2 19.000] [1]] [ANGL156661 [DARL G1 22.000] [1
CHNL#S 6:4 [ANGL190456 [LEPRG1 26.000] [1]] [ANGL156661 [DARL G1 22.000] [1
CHNL#S 5:4 [ANGL190450 [MACTG1 13.800] [1]] [ANGL156661 [DARL G1 22.000] [1
CHNL#S 3:4 [ANGL126652 [RAV 3 22.000] [1]] [ANGL156661 [DARL G1 22.000] [1
CHNL#S 2:4 [ANGL101063 [MYST G7 22.000] [1]] [ANGL156661 [DARL G1 22.000] [1
CHNL#S 1:4 [ANGL100060 [MIS GT1 18.000] [1]] [ANGL156661 [DARL G1 22.000] [1
100.00
-100.0
0.0
1.0000
2.0000
3.0000
4.0000
5.0000
6.0000
7.0000
8.0000
9.0000
10.000
TIME (SECONDS)
SAT, JAN 31 2009 15:41
"NE,NY,NB ANGLE"

2013 WINTER PEAK WITH DSM - DELIVER RESERVE
NS-NB=200; NB-NE=500; CBX=790; ONI=1015 ONS=704
3 PHASE FAULT L5049 AT 91H-TUFTS COVE69KV
CLEARS FAULT IN 9 CYCLES, NO RECLOSE
FILE: a112-I5049_3ph_nrecl-2013WP-DSM-NS-200.out
CHNL# 59: [POWR199169 [TUFTCV3 14.400] [3]]
CHNL# 56: [POWR199086 [TRENTON613.800] [6]]
CHNL# 55: [POWR199085 [TRENTN5 13.800] [5]]
CHNL# 54: [POWR199061 [TMP1 STO13.800] [1]]
CHNL# 52: [POWR199043 [ACONIG1 20.000] [1]]
CHNL# 50: [POWR199001 [LINGAN1 14.400] [1]]
2.5000
0.0
-1.500
1.0000
0.0
TIME (SECONDS)
SAT, JAN 31 2009 15:41
NS MW

2013 WINTER PEAK WITH DSM - DELIVER RESERVE
NS-NB=200; NB-NE=500; CBX=790; ONI=1015 ONS=704
3 PHASE FAULT L5049 AT 91H-TUFTS COVE69KV
CLEARS FAULT IN 9 CYCLES, NO RECLOSE
FILE: a112-I5049_3ph_nrecl-2013WP-DSM-NS-200.out
CHNL# 49: [POWR190472 [BLLDNG2 19.000] [1]]
CHNL# 45: [POWR190456 [LEPRG1 26.000] [1]]
CHNL# 44: [POWR190450 [MACTG1 13.800] [1]]
CHNL# 42: [POWR126652 [RAV 3 22.000] [1]]
CHNL# 41: [POWR101063 [MYST G7 22.000] [1]]
CHNL# 40: [POWR100060 [MIS GT1 18.000] [1]]
5.0000
0.0
4.0000
0.0
1.0000
6.5000
7.0000
2.0000
TIME (SECONDS)
SAT, JAN 31 2009 15:41
"NE,NY,NB POWER"

NS WIND MV

NS WIND MW

"345KV VOLTAGE"

FREQUENCY HZ

2013 WINTER PEAK WITH DSM - DELIVER RESERVE
NS-NB=200; NB-NE=500; CBX=790; ONI=1015 ONS=704
3 PHASE FAULT L5049 AT 91H-TUFTS COVE69KV
CLEARS FAULT IN 9 CYCLES, NO RECLOSE
FILE: a112-l5049_3ph_mecl-2013WP-DSM-NS-200.out
CHNL# 146: [VOLT199280 [TUSKET A138.00]]
CHNL# 145: [VOLT199193 [HHWAS 138.00]]
CHNL# 144: [VOLT199165 [TUFTCOVE138.00]]
CHNL# 143: [VOLT199138 [SPRNGHIL138.00]]
CHNL# 142: [VOLT199090 [SON-TREN138.00]]
CHNL# 141: [VOLT199051 [HASTINGS138.00]]
1.2000
0.70000
0.0
1.0000
2.0000
3.0000
4.0000
5.0000
6.0000
7.0000
8.0000
9.0000
10.000
TIME (SECONDS)
SAT, JAN 31 2009 15:41
138KV BUS VOLTS

2013 WINTER PEAK WITH DSM - DELIVER RESERVE
NS-NB=200; NB-NE=500; CBX=790; ONI=1015 ONS=704
3 PHASE FAULT L5049 AT 91H-TUFTS COVE69KV
CLEARS FAULT IN 9 CYCLES, NO RECLOSE
FILE: a112-l5049_3ph_mecl-2013WP-DSM-NS-200.out
CHNL# 140: [VOLT199240 [BWATER A230.00]]
CHNL# 139: [VOLT199200 [BRUSHY 230.00]]
CHNL# 138: [VOLT199130 [ONSLOW 230.00]]
CHNL# 137: [VOLT199050 [HASTINGS230.00]]
CHNL# 136: [VOLT199044 [PT.ACONI230.00]]
CHNL# 135: [VOLT199000 [LINGAN 230.00]]
1.2000
0.70000
0.0
1.0000
2.0000
3.0000
4.0000
5.0000
6.0000
7.0000
8.0000
9.0000
10.000
TIME (SECONDS)
SAT, JAN 31 2009 15:41
230KV BUS VOLTS

2013 WINTER PEAK WITH DSM - DELIVER RESERVE
NS-NB=200; NB-NE=500; CBX=790; ONI=1015 ONS=704
3 PHASE FAULT L5049 AT 91H-TUFTS COVE69KV
CLEARS FAULT IN 9 CYCLES, NO RECLOSE
FILE: a112-l5049_3ph_mecl-2013WP-DSM-NS-200.out
CHNL# 217: [L6513MW]
CHNL# 215: [L6503MW]
CHNL# 197: [L8003MW]
CHNL# 195: [L8004MW]
CHNL# 193: [L8001MW]
CHNL# 221: [L3001MW]
250.00
-250.0
500.00
0.0
1000.0
-1000.
TIME (SECONDS)
SAT, JAN 31 2009 15:41
LINE FLOW MW

2013 WINTER PEAK WITH DSM - DELIVER RESERVE
NS-NB=200; NB-NE=500; CBX=790; ONI=1015 ONS=704
3 PHASE FAULT L5049 AT 91H-TUFTS COVE69KV
CLEARS FAULT IN 9 CYCLES, NO RECLOSE
FILE: a112-l5049_3ph_mecl-2013WP-DSM-NS-200.out
CHNL# 154: [IR141-DIGBYH69.0 VOLTS]
CHNL# 153: [IR137-STATIG25.0 VOLTS]
CHNL# 152: [IR114-GLENDH138.0 VOLTS]
CHNL# 151: [IR84-DALHOHV230.0 VOLTS]
CHNL# 150: [IR82 NUTBHV69.0 VOLTS]
CHNL# 149: [IR45 AMHERTP138.0 VOLTS]
1.2000
0.70000
0.0
1.0000
2.0000
3.0000
4.0000
5.0000
6.0000
7.0000
8.0000
9.0000
10.000
TIME (SECONDS)
SAT, JAN 31 2009 15:41
WIND BUS VOLTS

2013 WINTER PEAK WITH DSM - DELIVER RESERVE
NS-NB=200; NB-NE=500; CBX=790; ONI=1015 ONS=704
3 PHASE FAULT L6009 AT 101H COBEQUID RD
CLEARS FAULT IN 6 CYCLES, RECLOSE FROM SACKVILLE IN 5S
FILE: a113-l6009_3ph_rect-2013WP-DSM-NS-200.out
CHNL#S 20,4: [ANGL199169 [TUFTCV3 14.400] [3]] [ANGL156661 [DARL G1 22.000] [1]
CHNL#S 17,4: [ANGL199086 [TRENTON613.800] [6]] [ANGL156661 [DARL G1 22.000] [1]
CHNL#S 16,4: [ANGL199085 [TRENTN5 13.800] [5]] [ANGL156661 [DARL G1 22.000] [1]
CHNL#S 15,4: [ANGL199061 [TMP1 STO13.800] [1]] [ANGL156661 [DARL G1 22.000] [1]
CHNL#S 13,4: [ANGL199043 [ACONIG1 20.000] [1]] [ANGL156661 [DARL G1 22.000] [1]
CHNL#S 11,4: [ANGL199001 [LINGAN1 14.400] [1]] [ANGL156661 [DARL G1 22.000] [1]
100.00
-100.0
0.0
1.0000
2.0000
3.0000
4.0000
5.0000
6.0000
7.0000
8.0000
9.0000
10.000
TIME (SECONDS)
SAT, JAN 31 2009 15:41
NS ANGLE

2013 WINTER PEAK WITH DSM - DELIVER RESERVE
NS-NB=200; NB-NE=500; CBX=790; ONI=1015 ONS=704
3 PHASE FAULT L6009 AT 101H COBEQUID RD
CLEARS FAULT IN 6 CYCLES, RECLOSE FROM SACKVILLE IN 5S
FILE: a113-l6009_3ph_rect-2013WP-DSM-NS-200.out
CHNL#S 10,4: [ANGL190472 [BLLDNG2 19.000] [1]] [ANGL156661 [DARL G1 22.000] [1]
CHNL#S 6,4: [ANGL190456 [LEPRG1 26.000] [1]] [ANGL156661 [DARL G1 22.000] [1]
CHNL#S 5,4: [ANGL190450 [MACTG1 13.800] [1]] [ANGL156661 [DARL G1 22.000] [1]
CHNL#S 3,4: [ANGL126652 [RAV 3 22.000] [1]] [ANGL156661 [DARL G1 22.000] [1]
CHNL#S 2,4: [ANGL101063 [MYST G7 22.000] [1]] [ANGL156661 [DARL G1 22.000] [1]
CHNL#S 1,4: [ANGL100060 [MIS GT1 18.000] [1]] [ANGL156661 [DARL G1 22.000] [1]
100.00
-100.0
0.0
1.0000
2.0000
3.0000
4.0000
5.0000
6.0000
7.0000
8.0000
9.0000
10.000
TIME (SECONDS)
SAT, JAN 31 2009 15:41
"NE,NY,NB ANGLE"

2013 WINTER PEAK WITH DSM - DELIVER RESERVE
NS-NB=200; NB-NE=500; CBX=790; ONI=1015 ONS=704
3 PHASE FAULT L6009 AT 101H COBEQUID RD
CLEARS FAULT IN 6 CYCLES, RECLOSE FROM SACKVILLE IN 5S
FILE: a113-l6009_3ph_rect-2013WP-DSM-NS-200.out
CHNL# 59: [POWER199169 [TUFTCV3 14.400] [3]]
CHNL# 56: [POWER199086 [TRENTON613.800] [6]]
CHNL# 55: [POWER199085 [TRENTN5 13.800] [5]]
CHNL# 54: [POWER199061 [TMP1 STO13.800] [1]]
CHNL# 52: [POWER199043 [ACONIG1 20.000] [1]]
CHNL# 50: [POWER199001 [LINGAN1 14.400] [1]]
2.5000
0.0
-1.500
1.0000
0.0
TIME (SECONDS)
SAT, JAN 31 2009 15:41
NS MW

2013 WINTER PEAK WITH DSM - DELIVER RESERVE
NS-NB=200; NB-NE=500; CBX=790; ONI=1015 ONS=704
3 PHASE FAULT L6009 AT 101H COBEQUID RD
CLEARS FAULT IN 6 CYCLES, RECLOSE FROM SACKVILLE IN 5S
FILE: a113-l6009_3ph_rect-2013WP-DSM-NS-200.out
CHNL# 49: [POWER190472 [BLLDNG2 19.000] [1]]
CHNL# 45: [POWER190456 [LEPRG1 26.000] [1]]
CHNL# 44: [POWER190450 [MACTG1 13.800] [1]]
CHNL# 42: [POWER126652 [RAV 3 22.000] [1]]
CHNL# 41: [POWER101063 [MYST G7 22.000] [1]]
CHNL# 40: [POWER100060 [MIS GT1 18.000] [1]]
5.0000
0.0
4.0000
0.0
1.0000
2.0000
TIME (SECONDS)
SAT, JAN 31 2009 15:41
"NE,NY,NB POWER"

2013 WINTER PEAK WITH DSM - DELIVER RESERVE
NS-NB=200; NB-NE=500; CBX=790; ONI=1015 ONS=704
3 PHASE FAULT L6009 AT 101H COBEQUID RD
CLEARS FAULT IN 6 CYCLES, RECLOSE FROM SACKVILLE IN 5S
FILE: a113-l6009_3ph_rect-2013WP-DSM-NS-200.out
CHNL# 119: [VARS IR141-DIGBY]
CHNL# 118: [VARS IR137-STATIA]
CHNL# 117: [VARS IR114-GLENDHU]
CHNL# 116: [VARS IR84-DALHOUSIE]
CHNL# 115: [VARS IR82_NUTTBY]
CHNL# 114: [VARS IR45_AMHERST]
TIME (SECONDS)
SAT, JAN 31 2009 15:41
NS WIND MV

2013 WINTER PEAK WITH DSM - DELIVER RESERVE
NS-NB=200; NB-NE=500; CBX=790; ONI=1015 ONS=704
3 PHASE FAULT L6009 AT 101H COBEQUID RD
CLEARS FAULT IN 6 CYCLES, RECLOSE FROM SACKVILLE IN 5S
FILE: a113-l6009_3ph_rect-2013WP-DSM-NS-200.out
CHNL# 79: [POWER IR141-DIGBY]
CHNL# 78: [POWER IR137-STATIA]
CHNL# 77: [POWER IR114-GLENDHU]
CHNL# 76: [POWER IR84-DALHOUSIE]
CHNL# 75: [POWER IR82_NUTTBY]
CHNL# 74: [POWER IR45_AMHERST]
TIME (SECONDS)
SAT, JAN 31 2009 15:41
NS WIND MW

2013 WINTER PEAK WITH DSM - DELIVER RESERVE
NS-NB=200; NB-NE=500; CBX=790; ONI=1015 ONS=704
3 PHASE FAULT L6009 AT 101H COBEQUID RD
CLEARS FAULT IN 6 CYCLES, RECLOSE FROM SACKVILLE IN 5S
FILE: a113-l6009_3ph_rect-2013WP-DSM-NS-200.out
CHNL# 133: [VOLT199125 [ONSLOW 345.00]]
CHNL# 132: [VOLT199120 [HOPEWELL 345.00]]
CHNL# 131: [VOLT199045 [WOODBINE345.00]]
CHNL# 130: [VOLT190320 [SALBRY 345.00]]
CHNL# 128: [VOLT190004 [KESWICK 345.00]]
CHNL# 127: [VOLT 70002 [ORRINGTN345.00]]
TIME (SECONDS)
SAT, JAN 31 2009 15:41
"345KV VOLTAGE"

2013 WINTER PEAK WITH DSM - DELIVER RESERVE
NS-NB=200; NB-NE=500; CBX=790; ONI=1015 ONS=704
3 PHASE FAULT L6009 AT 101H COBEQUID RD
CLEARS FAULT IN 6 CYCLES, RECLOSE FROM SACKVILLE IN 5S
FILE: a113-l6009_3ph_rect-2013WP-DSM-NS-200.out
CHNL# 125: 60*(1+[FREQ199125 [ONSLOW 345.00]])
CHNL# 124: 60*(1+[FREQ199120 [HOPEWELL 345.00]])
CHNL# 123: 60*(1+[FREQ199045 [WOODBINE345.00]])
CHNL# 122: 60*(1+[FREQ190320 [SALBRY 345.00]])
CHNL# 121: 60*(1+[FREQ190197 [C.COVE 345.00]])
CHNL# 120: 60*(1+[FREQ 70002 [ORRINGTN345.00]])
TIME (SECONDS)
SAT, JAN 31 2009 15:41
FREQUENCY HZ

2013 WINTER PEAK WITH DSM - DELIVER RESERVE
NS-NB=200; NB-NE=500; CBX=790; ONI=1015 ONS=704
3 PHASE FAULT L6009 AT 101H COBEQUID RD
CLEARS FAULT IN 6 CYCLES, RECLOSE FROM SACKVILLE IN 5S
FILE: a113-l6009_3ph_rec-2013WP-DSM-NS-200.out
CHNL# 146: [VOLT199280 [TUSKET A138.00]]
CHNL# 145: [VOLT199193 [HHWAS 138.00]]
CHNL# 144: [VOLT199165 [TUFTCOVE138.00]]
CHNL# 143: [VOLT199135 [SPRNGHILL138.00]]
CHNL# 142: [VOLT199090 [50N-TREN138.00]]
CHNL# 141: [VOLT199051 [HASTINGS138.00]]
TIME (SECONDS)
SAT, JAN 31 2009 15:41
138KV BUS VOLTS

2013 WINTER PEAK WITH DSM - DELIVER RESERVE
NS-NB=200; NB-NE=500; CBX=790; ONI=1015 ONS=704
3 PHASE FAULT L6009 AT 101H COBEQUID RD
CLEARS FAULT IN 6 CYCLES, RECLOSE FROM SACKVILLE IN 5S
FILE: a113-l6009_3ph_rec-2013WP-DSM-NS-200.out
CHNL# 140: [VOLT199240 [BWATER A230.00]]
CHNL# 139: [VOLT199200 [BRUSHY 230.00]]
CHNL# 138: [VOLT199130 [ONSLOW 230.00]]
CHNL# 137: [VOLT199050 [HASTINGS230.00]]
CHNL# 136: [VOLT199044 [PT.ACONI230.00]]
CHNL# 135: [VOLT199000 [LINGAN 230.00]]
TIME (SECONDS)
SAT, JAN 31 2009 15:41
230KV BUS VOLTS

2013 WINTER PEAK WITH DSM - DELIVER RESERVE
NS-NB=200; NB-NE=500; CBX=790; ONI=1015 ONS=704
3 PHASE FAULT L6009 AT 101H COBEQUID RD
CLEARS FAULT IN 6 CYCLES, RECLOSE FROM SACKVILLE IN 5S
FILE: a113-l6009_3ph_rec-2013WP-DSM-NS-200.out
CHNL# 217: [L6513MW]
CHNL# 215: [L6503MW]
CHNL# 197: [L8003MW]
CHNL# 195: [L8004MW]
CHNL# 193: [L8001MW]
CHNL# 221: [L3001MW]
TIME (SECONDS)
SAT, JAN 31 2009 15:41
LINE FLOW MW

2013 WINTER PEAK WITH DSM - DELIVER RESERVE
NS-NB=200; NB-NE=500; CBX=790; ONI=1015 ONS=704
3 PHASE FAULT L6009 AT 101H COBEQUID RD
CLEARS FAULT IN 6 CYCLES, RECLOSE FROM SACKVILLE IN 5S
FILE: a113-l6009_3ph_rec-2013WP-DSM-NS-200.out
CHNL# 154: [IR141-DIGBYH69.0 VOLTS]
CHNL# 153: [IR137-STATIG25.0 VOLTS]
CHNL# 152: [IR114-GLENDH138.0 VOLTS]
CHNL# 151: [IR84-DALHOHV230.0 VOLTS]
CHNL# 150: [IR82-NUTBHV69.0 VOLTS]
CHNL# 149: [IR45-AMHERTP138.0 VOLTS]
TIME (SECONDS)
SAT, JAN 31 2009 15:41
WIND BUS VOLTS

2013 WINTER PEAK WITH DSM - DELIVER RESERVE
NS-NB=200; NB-NE=500; CBX=790; ONI=1015 ONS=704
3 PHASE FAULT ON L6503 AT TRENTON
CLEARED IN 6 CYCLES - RECLOSE ATTEMPT FROM ONSLOW
FILE: a103-L6503_3ph_1n_recl-2013WP-DSM-NS-200.out
CHNL# 20: [ANGL199169 [TUFTCV3 14.400] [3]] [ANGL156661 [DARL G1 22.000] [1]
CHNL# 17: [ANGL199086 [TRENTON6 13.800] [6]] [ANGL156661 [DARL G1 22.000] [1]
CHNL# 16: [ANGL199085 [TRENTN5 13.800] [5]] [ANGL156661 [DARL G1 22.000] [1]
CHNL# 15: [ANGL199061 [TMP1 STO13.800] [1]] [ANGL156661 [DARL G1 22.000] [1]
CHNL# 13: [ANGL199043 [ACONIG1 20.000] [1]] [ANGL156661 [DARL G1 22.000] [1]
CHNL# 11: [ANGL199001 [LINGAN1 14.400] [1]] [ANGL156661 [DARL G1 22.000] [1]
100.00
-100.0
0.0
1.0000
2.0000
3.0000
4.0000
5.0000
6.0000
7.0000
8.0000
9.0000
10.000
TIME (SECONDS)
SAT, JAN 31 2009 15:41
NS ANGLE

2013 WINTER PEAK WITH DSM - DELIVER RESERVE
NS-NB=200; NB-NE=500; CBX=790; ONI=1015 ONS=704
3 PHASE FAULT ON L6503 AT TRENTON
CLEARED IN 6 CYCLES - RECLOSE ATTEMPT FROM ONSLOW
FILE: a103-L6503_3ph_1n_recl-2013WP-DSM-NS-200.out
CHNL# 10: [ANGL190472 [BLLDNG2 19.000] [1]] [ANGL156661 [DARL G1 22.000] [1]
CHNL# 6: [ANGL190456 [LEPRG1 26.000] [1]] [ANGL156661 [DARL G1 22.000] [1]
CHNL# 5: [ANGL190450 [MACTG1 13.800] [1]] [ANGL156661 [DARL G1 22.000] [1]
CHNL# 3: [ANGL126652 [RAV 3 22.000] [1]] [ANGL156661 [DARL G1 22.000] [1]
CHNL# 2: [ANGL101063 [MYST G7 22.000] [1]] [ANGL156661 [DARL G1 22.000] [1]
CHNL# 1: [ANGL100060 [MIS GT1 18.000] [1]] [ANGL156661 [DARL G1 22.000] [1]
100.00
-100.0
0.0
1.0000
2.0000
3.0000
4.0000
5.0000
6.0000
7.0000
8.0000
9.0000
10.000
TIME (SECONDS)
SAT, JAN 31 2009 15:41
"NE,NY,NB ANGLE"

2013 WINTER PEAK WITH DSM - DELIVER RESERVE
NS-NB=200; NB-NE=500; CBX=790; ONI=1015 ONS=704
3 PHASE FAULT ON L6503 AT TRENTON
CLEARED IN 6 CYCLES - RECLOSE ATTEMPT FROM ONSLOW
FILE: a103-L6503_3ph_1n_recl-2013WP-DSM-NS-200.out
CHNL# 59: [POWER199169 [TUFTCV3 14.400] [3]]
CHNL# 56: [POWER199086 [TRENTON6 13.800] [6]]
CHNL# 55: [POWER199085 [TRENTN5 13.800] [5]]
CHNL# 54: [POWER199061 [TMP1 STO13.800] [1]]
CHNL# 52: [POWER199043 [ACONIG1 20.000] [1]]
CHNL# 50: [POWER199001 [LINGAN1 14.400] [1]]
2.5000
0.0
-1.500
1.0000
2.0000
3.0000
4.0000
5.0000
6.0000
7.0000
8.0000
9.0000
10.000
TIME (SECONDS)
SAT, JAN 31 2009 15:41
NS MW

2013 WINTER PEAK WITH DSM - DELIVER RESERVE
NS-NB=200; NB-NE=500; CBX=790; ONI=1015 ONS=704
3 PHASE FAULT ON L6503 AT TRENTON
CLEARED IN 6 CYCLES - RECLOSE ATTEMPT FROM ONSLOW
FILE: a103-L6503_3ph_1n_recl-2013WP-DSM-NS-200.out
CHNL# 49: [POWER190472 [BLLDNG2 19.000] [1]]
CHNL# 45: [POWER190456 [LEPRG1 26.000] [1]]
CHNL# 44: [POWER190450 [MACTG1 13.800] [1]]
CHNL# 42: [POWER126652 [RAV 3 22.000] [1]]
CHNL# 41: [POWER101063 [MYST G7 22.000] [1]]
CHNL# 40: [POWER100060 [MIS GT1 18.000] [1]]
5.0000
0.0
4.0000
1.0000
2.0000
3.0000
4.0000
5.0000
6.0000
7.0000
8.0000
9.0000
10.000
TIME (SECONDS)
SAT, JAN 31 2009 15:41
"NE,NY,NB POWER"

2013 WINTER PEAK WITH DSM - DELIVER RESERVE
NS-NB=200; NB-NE=500; CBX=790; ONI=1015 ONS=704
3 PHASE FAULT ON L6503 AT TRENTON
CLEARED IN 6 CYCLES - RECLOSE ATTEMPT FROM ONSLOW
FILE: a103-L6503_3ph_1n_recl-2013WP-DSM-NS-200.out
CHNL# 119: [VARS IR141-DIGBY]
CHNL# 118: [VARS IR137-STATIA]
CHNL# 117: [VARS IR114-GLENDHU]
CHNL# 116: [VARS IR84-DALHOUSIE]
CHNL# 115: [VARS IR82_NUTTBY]
CHNL# 114: [VARS IR45_AMHERST]
TIME (SECONDS)
SAT, JAN 31 2009 15:41
NS WIND MV

2013 WINTER PEAK WITH DSM - DELIVER RESERVE
NS-NB=200; NB-NE=500; CBX=790; ONI=1015 ONS=704
3 PHASE FAULT ON L6503 AT TRENTON
CLEARED IN 6 CYCLES - RECLOSE ATTEMPT FROM ONSLOW
FILE: a103-L6503_3ph_1n_recl-2013WP-DSM-NS-200.out
CHNL# 79: [POWER IR141-DIGBY]
CHNL# 78: [POWER IR137-STATIA]
CHNL# 77: [POWER IR114-GLENDHU]
CHNL# 76: [POWER IR84-DALHOUSIE]
CHNL# 75: [POWER IR82_NUTTBY]
CHNL# 74: [POWER IR45_AMHERST]
TIME (SECONDS)
SAT, JAN 31 2009 15:41
NS WIND MW

2013 WINTER PEAK WITH DSM - DELIVER RESERVE
NS-NB=200; NB-NE=500; CBX=790; ONI=1015 ONS=704
3 PHASE FAULT ON L6503 AT TRENTON
CLEARED IN 6 CYCLES - RECLOSE ATTEMPT FROM ONSLOW
FILE: a103-L6503_3ph_1n_recl-2013WP-DSM-NS-200.out
CHNL# 133: [VOLT199125 [ONSLOW 345.00]]
CHNL# 132: [VOLT199120 [HOPEWELL345.00]]
CHNL# 131: [VOLT199045 [WOODBINE345.00]]
CHNL# 130: [VOLT190320 [SALBRY 345.00]]
CHNL# 128: [VOLT190004 [KESWICK 345.00]]
CHNL# 127: [VOLT 70002 [ORRINGTN345.00]]
TIME (SECONDS)
SAT, JAN 31 2009 15:41
"345KV VOLTAGE"

2013 WINTER PEAK WITH DSM - DELIVER RESERVE
NS-NB=200; NB-NE=500; CBX=790; ONI=1015 ONS=704
3 PHASE FAULT ON L6503 AT TRENTON
CLEARED IN 6 CYCLES - RECLOSE ATTEMPT FROM ONSLOW
FILE: a103-L6503_3ph_1n_recl-2013WP-DSM-NS-200.out
CHNL# 125: 60*(1+[FREQ199125 [ONSLOW 345.00]])
CHNL# 124: 60*(1+[FREQ199120 [HOPEWELL345.00]])
CHNL# 123: 60*(1+[FREQ199045 [WOODBINE345.00]])
CHNL# 122: 60*(1+[FREQ190320 [SALBRY 345.00]])
CHNL# 121: 60*(1+[FREQ190197 [C.COVE 345.00]])
CHNL# 120: 60*(1+[FREQ 70002 [ORRINGTN345.00]])
TIME (SECONDS)
SAT, JAN 31 2009 15:41
FREQUENCY HZ

2013 WINTER PEAK WITH DSM - DELIVER RESERVE
NS-NB=200; NB-NE=500; CBX=790; ONI=1015 ONS=704
3 PHASE FAULT ON L6503 AT TRENTON
CLEARED IN 6 CYCLES - RECLOSE ATTEMPT FROM ONSLOW
FILE: a103-L6503_3ph_1n_recl-2013WP-DSM-NS-200.out
CHNL# 146: [VOLT199280 [TUSKET A138.00]]
CHNL# 145: [VOLT199193 [HHWAS 138.00]]
CHNL# 144: [VOLT199165 [TUFTCOVE138.00]]
CHNL# 143: [VOLT199138: [SPRNGHILL138.00]]
CHNL# 142: [VOLT199090 [SON-TREN138.00]]
CHNL# 141: [VOLT199051 [HASTINGS138.00]]
1.2000
0.70000
0.0
1.0000
2.0000
3.0000
4.0000
5.0000
6.0000
7.0000
8.0000
9.0000
10.000
TIME (SECONDS)
SAT, JAN 31 2009 15:41
138KV BUS VOLTS

2013 WINTER PEAK WITH DSM - DELIVER RESERVE
NS-NB=200; NB-NE=500; CBX=790; ONI=1015 ONS=704
3 PHASE FAULT ON L6503 AT TRENTON
CLEARED IN 6 CYCLES - RECLOSE ATTEMPT FROM ONSLOW
FILE: a103-L6503_3ph_1n_recl-2013WP-DSM-NS-200.out
CHNL# 140: [VOLT199240 [BWATER A230.00]]
CHNL# 139: [VOLT199200 [BRUSHY 230.00]]
CHNL# 138: [VOLT199130 [ONSLOW 230.00]]
CHNL# 137: [VOLT199050 [HASTINGS230.00]]
CHNL# 136: [VOLT199044 [PT.ACONI230.00]]
CHNL# 135: [VOLT199000 [LINGAN 230.00]]
1.2000
0.70000
0.0
1.0000
2.0000
3.0000
4.0000
5.0000
6.0000
7.0000
8.0000
9.0000
10.000
TIME (SECONDS)
SAT, JAN 31 2009 15:41
230KV BUS VOLTS

2013 WINTER PEAK WITH DSM - DELIVER RESERVE
NS-NB=200; NB-NE=500; CBX=790; ONI=1015 ONS=704
3 PHASE FAULT ON L6503 AT TRENTON
CLEARED IN 6 CYCLES - RECLOSE ATTEMPT FROM ONSLOW
FILE: a103-L6503_3ph_1n_recl-2013WP-DSM-NS-200.out
CHNL# 217: [L6513MW]
CHNL# 215: [L6503MW]
CHNL# 197: [L8003MW]
CHNL# 195: [L8004MW]
CHNL# 193: [L8001MW]
CHNL# 221: [L3001MW]
250.00
-250.0
500.00
0.0
1000.0
-1000.
0.0
1.0000
2.0000
3.0000
4.0000
5.0000
6.0000
7.0000
8.0000
9.0000
10.000
TIME (SECONDS)
SAT, JAN 31 2009 15:41
LINE FLOW MW

2013 WINTER PEAK WITH DSM - DELIVER RESERVE
NS-NB=200; NB-NE=500; CBX=790; ONI=1015 ONS=704
3 PHASE FAULT ON L6503 AT TRENTON
CLEARED IN 6 CYCLES - RECLOSE ATTEMPT FROM ONSLOW
FILE: a103-L6503_3ph_1n_recl-2013WP-DSM-NS-200.out
CHNL# 154: [IR141-DIGBYH69.0 VOLTS]
CHNL# 153: [IR137-STATIG25.0 VOLTS]
CHNL# 152: [IR114-GLENDH138.0 VOLTS]
CHNL# 151: [IR84-DALHOHV230.0 VOLTS]
CHNL# 150: [IR82 NUTBHV69.0 VOLTS]
CHNL# 149: [IR45 AMHERTP138.0 VOLTS]
1.2000
0.70000
0.0
1.0000
2.0000
3.0000
4.0000
5.0000
6.0000
7.0000
8.0000
9.0000
10.000
TIME (SECONDS)
SAT, JAN 31 2009 15:41
WIND BUS VOLTS

2013 WINTER PEAK WITH DSM - DELIVER RESERVE
NS-NB=200; NB-NE=500; CBX=790; ONI=1015 ONS=704
3 PHASE FAULT ON L6014 AT KEMPT RD PRIMARY FAILED
CLEARED IN 6 CYCLES RECLOSING ATTEMPT FROM 91H IN 10 SEC
FILE: a117F-l6014_104H_3ph_rect-2013WP-DSM-NS-200.out
CHNL# 20: [ANGL199169 [TUFTCV3 14.400] [3]] [ANGL156661 [DARL G1 22.000] [1]
CHNL# 17: [ANGL199086 [TRENTON613.800] [6]] [ANGL156661 [DARL G1 22.000] [1]
CHNL# 16: [ANGL199085 [TRENTN5 13.800] [5]] [ANGL156661 [DARL G1 22.000] [1]
CHNL# 15: [ANGL199061 [TMP1 STO13.800] [1]] [ANGL156661 [DARL G1 22.000] [1]
CHNL# 13: [ANGL199043 [ACONIG1 20.000] [1]] [ANGL156661 [DARL G1 22.000] [1]
CHNL# 11: [ANGL199001 [LINGAN1 14.400] [1]] [ANGL156661 [DARL G1 22.000] [1]
100.00
-100.0
0.0
1.0000
2.0000
3.0000
4.0000
5.0000
6.0000
7.0000
8.0000
9.0000
10.000
TIME (SECONDS)
SAT, JAN 31 2009 15:41
NS ANGLE

2013 WINTER PEAK WITH DSM - DELIVER RESERVE
NS-NB=200; NB-NE=500; CBX=790; ONI=1015 ONS=704
3 PHASE FAULT ON L6014 AT KEMPT RD PRIMARY FAILED
CLEARED IN 6 CYCLES RECLOSING ATTEMPT FROM 91H IN 10 SEC
FILE: a117F-l6014_104H_3ph_rect-2013WP-DSM-NS-200.out
CHNL# 10: [ANGL190472 [BLLDNG2 19.000] [1]] [ANGL156661 [DARL G1 22.000] [1]
CHNL# 6: [ANGL190456 [LEPRG1 26.000] [1]] [ANGL156661 [DARL G1 22.000] [1]
CHNL# 5: [ANGL190450 [MACTG1 13.800] [1]] [ANGL156661 [DARL G1 22.000] [1]
CHNL# 3: [ANGL126652 [RAV 3 22.000] [1]] [ANGL156661 [DARL G1 22.000] [1]
CHNL# 2: [ANGL101063 [MYST G7 22.000] [1]] [ANGL156661 [DARL G1 22.000] [1]
CHNL# 1: [ANGL100060 [MIS GT1 18.000] [1]] [ANGL156661 [DARL G1 22.000] [1]
100.00
-100.0
0.0
1.0000
2.0000
3.0000
4.0000
5.0000
6.0000
7.0000
8.0000
9.0000
10.000
TIME (SECONDS)
SAT, JAN 31 2009 15:41
"NE,NY,NB ANGLE"

2013 WINTER PEAK WITH DSM - DELIVER RESERVE
NS-NB=200; NB-NE=500; CBX=790; ONI=1015 ONS=704
3 PHASE FAULT ON L6014 AT KEMPT RD PRIMARY FAILED
CLEARED IN 6 CYCLES RECLOSING ATTEMPT FROM 91H IN 10 SEC
FILE: a117F-l6014_104H_3ph_rect-2013WP-DSM-NS-200.out
CHNL# 59: [POWR199169 [TUFTCV3 14.400] [3]]
CHNL# 56: [POWR199086 [TRENTON613.800] [6]]
CHNL# 55: [POWR199085 [TRENTN5 13.800] [5]]
CHNL# 54: [POWR199061 [TMP1 STO13.800] [1]]
CHNL# 52: [POWR199043 [ACONIG1 20.000] [1]]
CHNL# 50: [POWR199001 [LINGAN1 14.400] [1]]
2.5000
1.0000
-1.500
0.0
0.0
1.0000
2.0000
3.0000
4.0000
5.0000
6.0000
7.0000
8.0000
9.0000
10.000
TIME (SECONDS)
SAT, JAN 31 2009 15:41
NS MW

2013 WINTER PEAK WITH DSM - DELIVER RESERVE
NS-NB=200; NB-NE=500; CBX=790; ONI=1015 ONS=704
3 PHASE FAULT ON L6014 AT KEMPT RD PRIMARY FAILED
CLEARED IN 6 CYCLES RECLOSING ATTEMPT FROM 91H IN 10 SEC
FILE: a117F-l6014_104H_3ph_rect-2013WP-DSM-NS-200.out
CHNL# 49: [POWER190472 [BLLDNG2 19.000] [1]]
CHNL# 45: [POWER190456 [LEPRG1 26.000] [1]]
CHNL# 44: [POWER190450 [MACTG1 13.800] [1]]
CHNL# 42: [POWER126652 [RAV 3 22.000] [1]]
CHNL# 41: [POWER101063 [MYST G7 22.000] [1]]
CHNL# 40: [POWER100060 [MIS GT1 18.000] [1]]
5.0000
9.0000
5.0000
5.0000
6.5000
7.0000
4.0000
0.0
0.0
1.0000
2.0000
0.0
1.0000
2.0000
3.0000
4.0000
5.0000
6.0000
7.0000
8.0000
9.0000
10.000
TIME (SECONDS)
SAT, JAN 31 2009 15:41
"NE,NY,NB POWER"

2013 WINTER PEAK WITH DSM - DELIVER RESERVE
NS-NB=200; NB-NE=500; CBX=790; ONI=1015 ONS=704
3 PHASE FAULT ON HASTINGS 138KV BUS B61
CLEARED IN 6 CYCLES
FILE: a114-b61_3ph_2C_nrecl-2013WP-DSM-NS-200.out
CHNL#S 20:4 [ANGL199169 [TUFTCV3 14.400] [3]] [ANGL156661 [DARL G1 22.000] [1
CHNL#S 17:4 [ANGL199086 [TRENTON613.800] [6]] [ANGL156661 [DARL G1 22.000] [1
CHNL#S 16:4 [ANGL199085 [TRENTN5 13.800] [5]] [ANGL156661 [DARL G1 22.000] [1
CHNL#S 15:4 [ANGL199061 [TMP1 STO13.800] [1]] [ANGL156661 [DARL G1 22.000] [1
CHNL#S 13:4 [ANGL199043 [ACONIG1 20.000] [1]] [ANGL156661 [DARL G1 22.000] [1
CHNL#S 11:4 [ANGL199001 [LINGAN1 14.400] [1]] [ANGL156661 [DARL G1 22.000] [1
100.00
-100.0
0.0
1.0000
2.0000
3.0000
4.0000
5.0000
6.0000
7.0000
8.0000
9.0000
10.000
TIME (SECONDS)
SAT, JAN 31 2009 15:41
NS ANGLE

2013 WINTER PEAK WITH DSM - DELIVER RESERVE
NS-NB=200; NB-NE=500; CBX=790; ONI=1015 ONS=704
3 PHASE FAULT ON HASTINGS 138KV BUS B61
CLEARED IN 6 CYCLES
FILE: a114-b61_3ph_2C_nrecl-2013WP-DSM-NS-200.out
CHNL#S 10:4 [ANGL190472 [BLLDNG2 19.000] [1]] [ANGL156661 [DARL G1 22.000] [1
CHNL#S 6:4 [ANGL190456 [LEPRG1 26.000] [1]] [ANGL156661 [DARL G1 22.000] [1
CHNL#S 5:4 [ANGL190450 [MACTG1 13.800] [1]] [ANGL156661 [DARL G1 22.000] [1
CHNL#S 3:4 [ANGL126652 [RAV 3 22.000] [1]] [ANGL156661 [DARL G1 22.000] [1
CHNL#S 2:4 [ANGL101063 [MYST G7 22.000] [1]] [ANGL156661 [DARL G1 22.000] [1
CHNL#S 1:4 [ANGL100060 [MIS GT1 18.000] [1]] [ANGL156661 [DARL G1 22.000] [1
100.00
-100.0
0.0
1.0000
2.0000
3.0000
4.0000
5.0000
6.0000
7.0000
8.0000
9.0000
10.000
TIME (SECONDS)
SAT, JAN 31 2009 15:41
"NE,NY,NB ANGLE"

2013 WINTER PEAK WITH DSM - DELIVER RESERVE
NS-NB=200; NB-NE=500; CBX=790; ONI=1015 ONS=704
3 PHASE FAULT ON HASTINGS 138KV BUS B61
CLEARED IN 6 CYCLES
FILE: a114-b61_3ph_2C_nrecl-2013WP-DSM-NS-200.out
CHNL# 59: [POWER199169 [TUFTCV3 14.400] [3]]
CHNL# 56: [POWER199086 [TRENTON613.800] [6]]
CHNL# 55: [POWER199085 [TRENTN5 13.800] [5]]
CHNL# 54: [POWER199061 [TMP1 STO13.800] [1]]
CHNL# 52: [POWER199043 [ACONIG1 20.000] [1]]
CHNL# 50: [POWER199001 [LINGAN1 14.400] [1]]
2.5000
0.0
-1.500
1.0000
2.0000
3.0000
4.0000
5.0000
6.0000
7.0000
8.0000
9.0000
10.000
TIME (SECONDS)
SAT, JAN 31 2009 15:41
NS MW

2013 WINTER PEAK WITH DSM - DELIVER RESERVE
NS-NB=200; NB-NE=500; CBX=790; ONI=1015 ONS=704
3 PHASE FAULT ON HASTINGS 138KV BUS B61
CLEARED IN 6 CYCLES
FILE: a114-b61_3ph_2C_nrecl-2013WP-DSM-NS-200.out
CHNL# 49: [POWER190472 [BLLDNG2 19.000] [1]]
CHNL# 45: [POWER190456 [LEPRG1 26.000] [1]]
CHNL# 44: [POWER190450 [MACTG1 13.800] [1]]
CHNL# 42: [POWER126652 [RAV 3 22.000] [1]]
CHNL# 41: [POWER101063 [MYST G7 22.000] [1]]
CHNL# 40: [POWER100060 [MIS GT1 18.000] [1]]
5.0000
0.0
4.0000
1.0000
2.0000
3.0000
4.0000
5.0000
6.0000
7.0000
8.0000
9.0000
10.000
TIME (SECONDS)
SAT, JAN 31 2009 15:41
"NE,NY,NB POWER"

2013 WINTER PEAK WITH DSM - DELIVER RESERVE
NS-NB=200; NB-NE=500; CBX=790; ONI=1015 ONS=704
3 PHASE FAULT ON HASTINGS 138KV BUS B61
CLEARED IN 6 CYCLES
FILE: a114-b61_3ph_2C_mrecl-2013WP-DSM-NS-200.out
CHNL# 119: [VARS IR141-DIGBY]
CHNL# 118: [VARS IR137-STATIA]
CHNL# 117: [VARS IR114-GLENDHU]
CHNL# 116: [VARS IR84-DALHOUSIE]
CHNL# 115: [VARS IR82_NUTTBY]
CHNL# 114: [VARS IR45_AMHERST]
TIME (SECONDS)
SAT, JAN 31 2009 15:41
NS WIND MV

2013 WINTER PEAK WITH DSM - DELIVER RESERVE
NS-NB=200; NB-NE=500; CBX=790; ONI=1015 ONS=704
3 PHASE FAULT ON HASTINGS 138KV BUS B61
CLEARED IN 6 CYCLES
FILE: a114-b61_3ph_2C_mrecl-2013WP-DSM-NS-200.out
CHNL# 79: [POWER IR141-DIGBY]
CHNL# 78: [POWER IR137-STATIA]
CHNL# 77: [POWER IR114-GLENDHU]
CHNL# 76: [POWER IR84-DALHOUSIE]
CHNL# 75: [POWER IR82_NUTTBY]
CHNL# 74: [POWER IR45_AMHERST]
TIME (SECONDS)
SAT, JAN 31 2009 15:41
NS WIND MW

2013 WINTER PEAK WITH DSM - DELIVER RESERVE
NS-NB=200; NB-NE=500; CBX=790; ONI=1015 ONS=704
3 PHASE FAULT ON HASTINGS 138KV BUS B61
CLEARED IN 6 CYCLES
FILE: a114-b61_3ph_2C_mrecl-2013WP-DSM-NS-200.out
CHNL# 133: [VOLT199125 IONSLOW 345.00]
CHNL# 132: [VOLT199120 IHOPEWELL345.00]
CHNL# 131: [VOLT199045 IWOODBINE345.00]
CHNL# 130: [VOLT190320 ISALBRY 345.00]
CHNL# 128: [VOLT190004 IKESWICK 345.00]
CHNL# 127: [VOLT 70002 IORRINGTN345.00]
TIME (SECONDS)
SAT, JAN 31 2009 15:41
"345KV VOLTAGE"

2013 WINTER PEAK WITH DSM - DELIVER RESERVE
NS-NB=200; NB-NE=500; CBX=790; ONI=1015 ONS=704
3 PHASE FAULT ON HASTINGS 138KV BUS B61
CLEARED IN 6 CYCLES
FILE: a114-b61_3ph_2C_mrecl-2013WP-DSM-NS-200.out
CHNL# 125: [60*(1+[FREQ199125 IONSLOW 345.00])]
CHNL# 124: [60*(1+[FREQ199120 IHOPEWELL345.00])]
CHNL# 123: [60*(1+[FREQ199045 IWOODBINE345.00])]
CHNL# 122: [60*(1+[FREQ190320 ISALBRY 345.00])]
CHNL# 121: [60*(1+[FREQ190197 IC.COVE 345.00])]
CHNL# 120: [60*(1+[FREQ 70002 IORRINGTN345.00])]
TIME (SECONDS)
SAT, JAN 31 2009 15:41
FREQUENCY HZ

2013 WINTER PEAK WITH DSM - DELIVER RESERVE
NS-NB=200; NB-NE=500; CBX=790; ONI=1015 ONS=704
3 PHASE FAULT ON HASTINGS 138KV BUS B61
CLEARED IN 6 CYCLES
FILE: a114-b61_3ph_2C_nrecl-2013WP-DSM-NS-200.out
CHNL# 146: [VOLT199280 [TUSKET A138.00]]
CHNL# 145: [VOLT199193 [HHWAS 138.00]]
CHNL# 144: [VOLT199165 [TUFTCOVE138.00]]
CHNL# 143: [VOLT199138 [SPRNGHLL138.00]]
CHNL# 142: [VOLT199090 [SON-TREN138.00]]
CHNL# 141: [VOLT199051 [HASTINGS138.00]]
1.2000
0.70000
0.0
1.0000
2.0000
3.0000
4.0000
5.0000
6.0000
7.0000
8.0000
9.0000
10.000
TIME (SECONDS)
SAT, JAN 31 2009 15:41
138KV BUS VOLTS

2013 WINTER PEAK WITH DSM - DELIVER RESERVE
NS-NB=200; NB-NE=500; CBX=790; ONI=1015 ONS=704
3 PHASE FAULT ON HASTINGS 138KV BUS B61
CLEARED IN 6 CYCLES
FILE: a114-b61_3ph_2C_nrecl-2013WP-DSM-NS-200.out
CHNL# 140: [VOLT199240 [BWATER A230.00]]
CHNL# 139: [VOLT199200 [BRUSHY 230.00]]
CHNL# 138: [VOLT199130 [ONSLOW 230.00]]
CHNL# 137: [VOLT199050 [HASTINGS230.00]]
CHNL# 136: [VOLT199044 [PT.ACONI230.00]]
CHNL# 135: [VOLT199000 [LINGAN 230.00]]
1.2000
0.70000
0.0
1.0000
2.0000
3.0000
4.0000
5.0000
6.0000
7.0000
8.0000
9.0000
10.000
TIME (SECONDS)
SAT, JAN 31 2009 15:41
230KV BUS VOLTS

2013 WINTER PEAK WITH DSM - DELIVER RESERVE
NS-NB=200; NB-NE=500; CBX=790; ONI=1015 ONS=704
3 PHASE FAULT ON HASTINGS 138KV BUS B61
CLEARED IN 6 CYCLES
FILE: a114-b61_3ph_2C_nrecl-2013WP-DSM-NS-200.out
CHNL# 217: [L6533MW]
CHNL# 215: [L6503MW]
CHNL# 197: [L8003MW]
CHNL# 195: [L8004MW]
CHNL# 193: [L8001MW]
CHNL# 221: [L3001MW]
250.00
-250.0
500.00
0.0
1000.0
-1000.
0.0
1.0000
2.0000
3.0000
4.0000
5.0000
6.0000
7.0000
8.0000
9.0000
10.000
TIME (SECONDS)
SAT, JAN 31 2009 15:41
LINE FLOW MW

2013 WINTER PEAK WITH DSM - DELIVER RESERVE
NS-NB=200; NB-NE=500; CBX=790; ONI=1015 ONS=704
3 PHASE FAULT ON HASTINGS 138KV BUS B61
CLEARED IN 6 CYCLES
FILE: a114-b61_3ph_2C_nrecl-2013WP-DSM-NS-200.out
CHNL# 154: [IR141-DIGBYH69.0 VOLTS]
CHNL# 153: [IR137-STATIG25.0 VOLTS]
CHNL# 152: [IR114-GLENDH138.0 VOLTS]
CHNL# 151: [IR84-DALHOHV230.0 VOLTS]
CHNL# 150: [IR82_NUTBHV69.0 VOLTS]
CHNL# 149: [IR45_AMHERTP138.0 VOLTS]
1.2000
0.70000
0.0
1.0000
2.0000
3.0000
4.0000
5.0000
6.0000
7.0000
8.0000
9.0000
10.000
TIME (SECONDS)
SAT, JAN 31 2009 15:41
WIND BUS VOLTS

2013 WINTER PEAK WITH DSM - DELIVER RESERVE
NS-NB=200; NB-NE=500; CBX=790; ONI=1015 ONS=704
3 PHASE FAULT ON HASTINGS 138KV BUS B62
CLEARED IN 6 CYCLES
FILE: a115-b62_3ph_2C_nrecl-2013WP-DSM-NS-200.out
CHNL#S 20:4 [ANGL199169 [TUFTCV3 14.400] [3]] [ANGL156661 [DARL G1 22.000] [1]
CHNL#S 17:4 [ANGL199086 [TRENTON613.800] [6]] [ANGL156661 [DARL G1 22.000] [1]
CHNL#S 16:4 [ANGL199085 [TRENTN5 13.800] [5]] [ANGL156661 [DARL G1 22.000] [1]
CHNL#S 15:4 [ANGL199061 [TMP1 STO13.800] [1]] [ANGL156661 [DARL G1 22.000] [1]
CHNL#S 13:4 [ANGL199043 [ACONIG1 20.000] [1]] [ANGL156661 [DARL G1 22.000] [1]
CHNL#S 11:4 [ANGL199001 [LINGAN1 14.400] [1]] [ANGL156661 [DARL G1 22.000] [1]
TIME (SECONDS)
SAT, JAN 31 2009 15:41
NS ANGLE

2013 WINTER PEAK WITH DSM - DELIVER RESERVE
NS-NB=200; NB-NE=500; CBX=790; ONI=1015 ONS=704
3 PHASE FAULT ON HASTINGS 138KV BUS B62
CLEARED IN 6 CYCLES
FILE: a115-b62_3ph_2C_nrecl-2013WP-DSM-NS-200.out
CHNL#S 10:4 [ANGL190472 [BLLDNG2 19.000] [1]] [ANGL156661 [DARL G1 22.000] [1]
CHNL#S 6:4 [ANGL190456 [LEPRG1 26.000] [1]] [ANGL156661 [DARL G1 22.000] [1]
CHNL#S 5:4 [ANGL190450 [MACTG1 13.800] [1]] [ANGL156661 [DARL G1 22.000] [1]
CHNL#S 3:4 [ANGL126652 [RAV 3 22.000] [1]] [ANGL156661 [DARL G1 22.000] [1]
CHNL#S 2:4 [ANGL101063 [MYST G7 22.000] [1]] [ANGL156661 [DARL G1 22.000] [1]
CHNL#S 1:4 [ANGL100060 [MIS GT1 18.000] [1]] [ANGL156661 [DARL G1 22.000] [1]
TIME (SECONDS)
SAT, JAN 31 2009 15:41
"NE,NY,NB ANGLE"

2013 WINTER PEAK WITH DSM - DELIVER RESERVE
NS-NB=200; NB-NE=500; CBX=790; ONI=1015 ONS=704
3 PHASE FAULT ON HASTINGS 138KV BUS B62
CLEARED IN 6 CYCLES
FILE: a115-b62_3ph_2C_nrecl-2013WP-DSM-NS-200.out
CHNL# 59: [POWER199169 [TUFTCV3 14.400] [3]]
CHNL# 56: [POWER199086 [TRENTON613.800] [6]]
CHNL# 55: [POWER199085 [TRENTN5 13.800] [5]]
CHNL# 54: [POWER199061 [TMP1 STO13.800] [1]]
CHNL# 52: [POWER199043 [ACONIG1 20.000] [1]]
CHNL# 50: [POWER199001 [LINGAN1 14.400] [1]]
TIME (SECONDS)
SAT, JAN 31 2009 15:41
NS MW

2013 WINTER PEAK WITH DSM - DELIVER RESERVE
NS-NB=200; NB-NE=500; CBX=790; ONI=1015 ONS=704
3 PHASE FAULT ON HASTINGS 138KV BUS B62
CLEARED IN 6 CYCLES
FILE: a115-b62_3ph_2C_nrecl-2013WP-DSM-NS-200.out
CHNL# 49: [POWER190472 [BLLDNG2 19.000] [1]]
CHNL# 45: [POWER190456 [LEPRG1 26.000] [1]]
CHNL# 44: [POWER190450 [MACTG1 13.800] [1]]
CHNL# 42: [POWER126652 [RAV 3 22.000] [1]]
CHNL# 41: [POWER101063 [MYST G7 22.000] [1]]
CHNL# 40: [POWER100060 [MIS GT1 18.000] [1]]
TIME (SECONDS)
SAT, JAN 31 2009 15:41
"NE,NY,NB POWER"

2013 WINTER PEAK WITH DSM - DELIVER RESERVE
NS-NB=200; NB-NE=500; CBX=790; ONI=1015 ONS=704
3 PHASE FAULT ON HASTINGS 138KV BUS B62
CLEARED IN 6 CYCLES
FILE: a115-b62_3ph_2C_nrecl-2013WP-DSM-NS-200.out
CHNL# 119: [VARS IR141-DIGBY]
CHNL# 118: [VARS IR137-STATIA]
CHNL# 117: [VARS IR114-GLENDHU]
CHNL# 116: [VARS IR84-DALHOUSIE]
CHNL# 115: [VARS IR82_NUTTBY]
CHNL# 114: [VARS IR45_AMHERST]
TIME (SECONDS)
SAT, JAN 31 2009 15:41
NS WIND MV

2013 WINTER PEAK WITH DSM - DELIVER RESERVE
NS-NB=200; NB-NE=500; CBX=790; ONI=1015 ONS=704
3 PHASE FAULT ON HASTINGS 138KV BUS B62
CLEARED IN 6 CYCLES
FILE: a115-b62_3ph_2C_nrecl-2013WP-DSM-NS-200.out
CHNL# 79: [POWER IR141-DIGBY]
CHNL# 78: [POWER IR137-STATIA]
CHNL# 77: [POWER IR114-GLENDHU]
CHNL# 76: [POWER IR84-DALHOUSIE]
CHNL# 75: [POWER IR82_NUTTBY]
CHNL# 74: [POWER IR45_AMHERST]
TIME (SECONDS)
SAT, JAN 31 2009 15:41
NS WIND MW

2013 WINTER PEAK WITH DSM - DELIVER RESERVE
NS-NB=200; NB-NE=500; CBX=790; ONI=1015 ONS=704
3 PHASE FAULT ON HASTINGS 138KV BUS B62
CLEARED IN 6 CYCLES
FILE: a115-b62_3ph_2C_nrecl-2013WP-DSM-NS-200.out
CHNL# 133: [VOLT199125 IONSLOW 345.00]
CHNL# 132: [VOLT199120 IHOPEWELL345.00]
CHNL# 131: [VOLT199045 IWOODBINE345.00]
CHNL# 130: [VOLT190320 ISALBRY 345.00]
CHNL# 128: [VOLT190004 IKESWICK 345.00]
CHNL# 127: [VOLT 70002 IORRINGTN345.00]
TIME (SECONDS)
SAT, JAN 31 2009 15:41
"345KV VOLTAGE"

2013 WINTER PEAK WITH DSM - DELIVER RESERVE
NS-NB=200; NB-NE=500; CBX=790; ONI=1015 ONS=704
3 PHASE FAULT ON HASTINGS 138KV BUS B62
CLEARED IN 6 CYCLES
FILE: a115-b62_3ph_2C_nrecl-2013WP-DSM-NS-200.out
CHNL# 125: [60*(1+[FREQ199125 IONSLOW 345.00])]
CHNL# 124: [60*(1+[FREQ199120 IHOPEWELL345.00])]
CHNL# 123: [60*(1+[FREQ199045 IWOODBINE345.00])]
CHNL# 122: [60*(1+[FREQ190320 ISALBRY 345.00])]
CHNL# 121: [60*(1+[FREQ190197 IC.COVE 345.00])]
CHNL# 120: [60*(1+[FREQ 70002 IORRINGTN345.00])]
TIME (SECONDS)
SAT, JAN 31 2009 15:41
FREQUENCY HZ

2013 WINTER PEAK WITH DSM - DELIVER RESERVE
NS-NB=200; NB-NE=500; CBX=790; ONI=1015 ONS=704
3 PHASE FAULT ON HASTINGS 138KV BUS B62
CLEARED IN 6 CYCLES
FILE: a115-b62_3ph_2C_nrecl-2013WP-DSM-NS-200.out
CHNL# 146: [VOLT199280 [TUSKET A138.00]]
CHNL# 145: [VOLT199193 [HHWAS 138.00]]
CHNL# 144: [VOLT199165 [TUFTCOVE138.00]]
CHNL# 143: [VOLT199138 [SPRNGHILL138.00]]
CHNL# 142: [VOLT199090 [SON-TREN138.00]]
CHNL# 141: [VOLT199051 [HASTINGS138.00]]
1.2000
0.70000
0.0
1.0000
2.0000
3.0000
4.0000
5.0000
6.0000
7.0000
8.0000
9.0000
10.000
TIME (SECONDS)
SAT, JAN 31 2009 15:41
138KV BUS VOLTS

2013 WINTER PEAK WITH DSM - DELIVER RESERVE
NS-NB=200; NB-NE=500; CBX=790; ONI=1015 ONS=704
3 PHASE FAULT ON HASTINGS 138KV BUS B62
CLEARED IN 6 CYCLES
FILE: a115-b62_3ph_2C_nrecl-2013WP-DSM-NS-200.out
CHNL# 140: [VOLT199240 [BWATER A230.00]]
CHNL# 139: [VOLT199200 [BRUSHY 230.00]]
CHNL# 138: [VOLT199130 [ONSLOW 230.00]]
CHNL# 137: [VOLT199050 [HASTINGS230.00]]
CHNL# 136: [VOLT199044 [PT.ACONI230.00]]
CHNL# 135: [VOLT199000 [LINGAN 230.00]]
1.2000
0.70000
0.0
1.0000
2.0000
3.0000
4.0000
5.0000
6.0000
7.0000
8.0000
9.0000
10.000
TIME (SECONDS)
SAT, JAN 31 2009 15:41
230KV BUS VOLTS

2013 WINTER PEAK WITH DSM - DELIVER RESERVE
NS-NB=200; NB-NE=500; CBX=790; ONI=1015 ONS=704
3 PHASE FAULT ON HASTINGS 138KV BUS B62
CLEARED IN 6 CYCLES
FILE: a115-b62_3ph_2C_nrecl-2013WP-DSM-NS-200.out
CHNL# 217: [L6533MW]
CHNL# 215: [L6503MW]
CHNL# 197: [L8003MW]
CHNL# 195: [L8004MW]
CHNL# 193: [L8001MW]
CHNL# 221: [L3001MW]
250.00
-250.0
500.00
0.0
1000.0
-1000.
0.0
1.0000
2.0000
3.0000
4.0000
5.0000
6.0000
7.0000
8.0000
9.0000
10.000
TIME (SECONDS)
SAT, JAN 31 2009 15:41
LINE FLOW MW

2013 WINTER PEAK WITH DSM - DELIVER RESERVE
NS-NB=200; NB-NE=500; CBX=790; ONI=1015 ONS=704
3 PHASE FAULT ON HASTINGS 138KV BUS B62
CLEARED IN 6 CYCLES
FILE: a115-b62_3ph_2C_nrecl-2013WP-DSM-NS-200.out
CHNL# 154: [IR141-DIGBYH69.0 VOLTS]
CHNL# 153: [IR137-STATIG25.0 VOLTS]
CHNL# 152: [IR114-GLENDH138.0 VOLTS]
CHNL# 151: [IR84-DALHOHV230.0 VOLTS]
CHNL# 150: [IR82_NUTBHV69.0 VOLTS]
CHNL# 149: [IR45_AMHERTP138.0 VOLTS]
1.2000
0.70000
0.0
1.0000
2.0000
3.0000
4.0000
5.0000
6.0000
7.0000
8.0000
9.0000
10.000
TIME (SECONDS)
SAT, JAN 31 2009 15:41
WIND BUS VOLTS

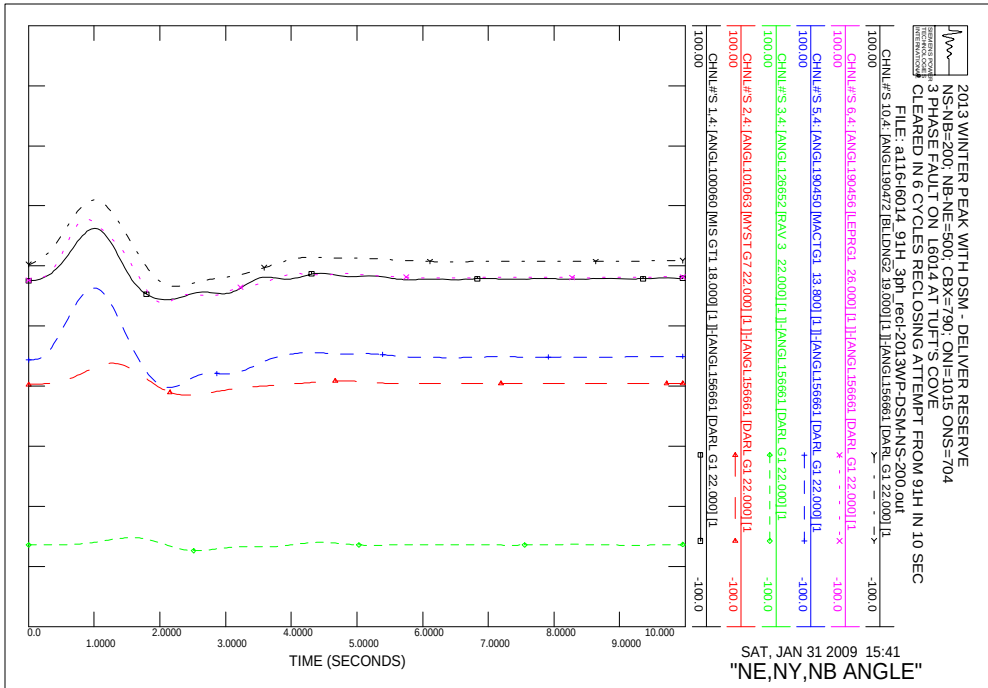
2013 WINTER PEAK WITH DSM - DELIVER RESERVE
NS-NB=200; NB-NE=500; CBX=790; ONI=1015 ONS=704
3 PHASE FAULT ON L6014 AT TUFT'S COVE
CLEARED IN 6 CYCLES RECLOSING ATTEMPT FROM 91H IN 10 SEC
FILE: a116-l6014_91H_3ph_recl-2013WP-DSM-NS-200.out
CHNL#'S 10,4: [ANGL190472 [BLLDNG2 19.000] [1]]-[ANGL156661 [DARL G1 22.000] [1
CHNL#'S 6,4: [ANGL190456 [LEPRG1 26.000] [1]]-[ANGL156661 [DARL G1 22.000] [1
CHNL#'S 5,4: [ANGL190450 [MACTG1 13.800] [1]]-[ANGL156661 [DARL G1 22.000] [1
CHNL#'S 3,4: [ANGL126652 [RAV 3 22.000] [1]]-[ANGL156661 [DARL G1 22.000] [1
CHNL#'S 2,4: [ANGL101063 [MYST G7 22.000] [1]]-[ANGL156661 [DARL G1 22.000] [1
CHNL#'S 1,4: [ANGL100060 [MIS GT1 18.000] [1]]-[ANGL156661 [DARL G1 22.000] [1
100.00
-100.0
0.0
1.0000
2.0000
3.0000
4.0000
5.0000
6.0000
7.0000
8.0000
9.0000
10.000
TIME (SECONDS)
SAT, JAN 31 2009 15:41
"NE,NY,NB ANGLE"

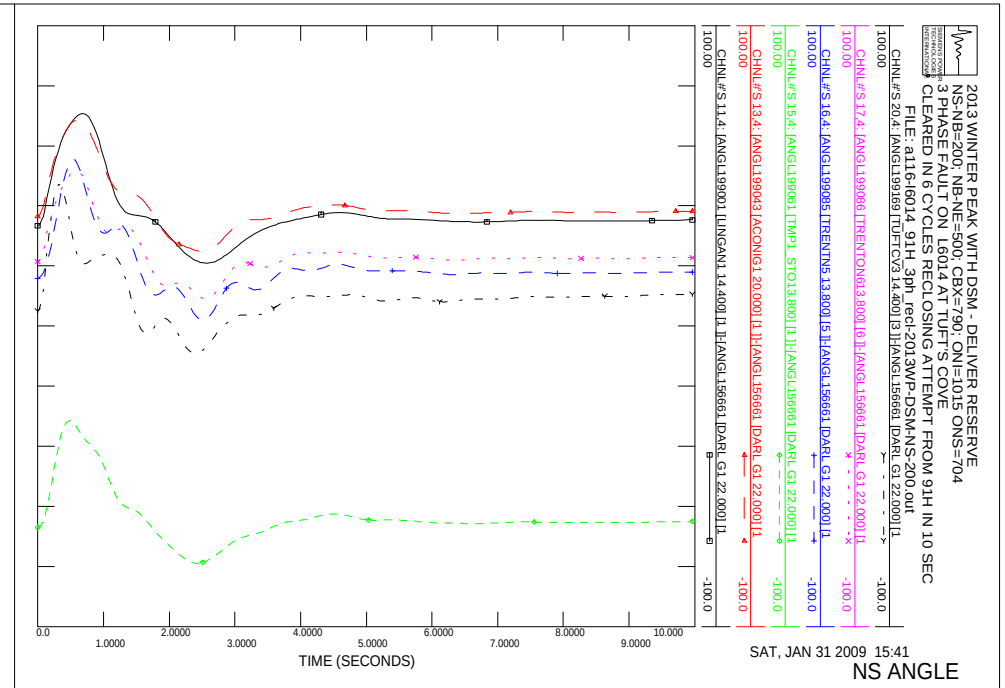
2013 WINTER PEAK WITH DSM - DELIVER RESERVE
NS-NB=200; NB-NE=500; CBX=790; ONI=1015 ONS=704
3 PHASE FAULT ON L6014 AT TUFT'S COVE
CLEARED IN 6 CYCLES RECLOSING ATTEMPT FROM 91H IN 10 SEC
FILE: a116-l6014_91H_3ph_recl-2013WP-DSM-NS-200.out
CHNL#'S 20,4: [ANGL199169 [TUFTCV3 14.400] [3]]-[ANGL156661 [DARL G1 22.000] [1
CHNL#'S 17,4: [ANGL199086 [TRENTON613.800] [6]]-[ANGL156661 [DARL G1 22.000] [1
CHNL#'S 16,4: [ANGL199085 [TRENTN5 13.800] [5]]-[ANGL156661 [DARL G1 22.000] [1
CHNL#'S 15,4: [ANGL199061 [TMP1 STO13.800] [1]]-[ANGL156661 [DARL G1 22.000] [1
CHNL#'S 13,4: [ANGL199043 [ACONIG1 20.000] [1]]-[ANGL156661 [DARL G1 22.000] [1
CHNL#'S 11,4: [ANGL199001 [LINGAN1 14.400] [1]]-[ANGL156661 [DARL G1 22.000] [1
100.00
-100.0
0.0
1.0000
2.0000
3.0000
4.0000
5.0000
6.0000
7.0000
8.0000
9.0000
10.000
TIME (SECONDS)
SAT, JAN 31 2009 15:41
NS ANGLE

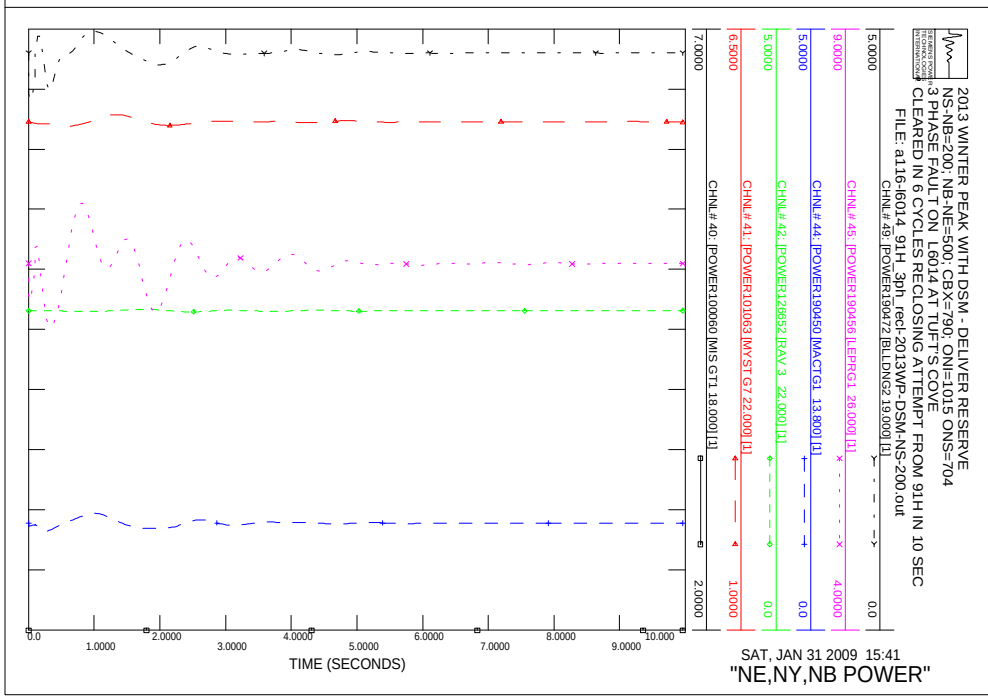
2013 WINTER PEAK WITH DSM - DELIVER RESERVE
NS-NB=200; NB-NE=500; CBX=790; ONI=1015 ONS=704
3 PHASE FAULT ON L6014 AT TUFT'S COVE
CLEARED IN 6 CYCLES RECLOSING ATTEMPT FROM 91H IN 10 SEC
FILE: a116-l6014_91H_3ph_recl-2013WP-DSM-NS-200.out
CHNL# 49: [POWER190472 [BLLDNG2 19.000] [1]
CHNL# 45: [POWER190456 [LEPRG1 26.000] [1]
CHNL# 44: [POWER190450 [MACTG1 13.800] [1]
CHNL# 42: [POWER126652 [RAV 3 22.000] [1]
CHNL# 41: [POWER101063 [MYST G7 22.000] [1]
CHNL# 40: [POWER100060 [MIS GT1 18.000] [1]
5.0000
0.0
9.0000
4.0000
5.0000
0.0
5.0000
0.0
6.5000
1.0000
7.0000
2.0000
0.0
1.0000
2.0000
3.0000
4.0000
5.0000
6.0000
7.0000
8.0000
9.0000
10.000
TIME (SECONDS)
SAT, JAN 31 2009 15:41
"NE,NY,NB POWER"

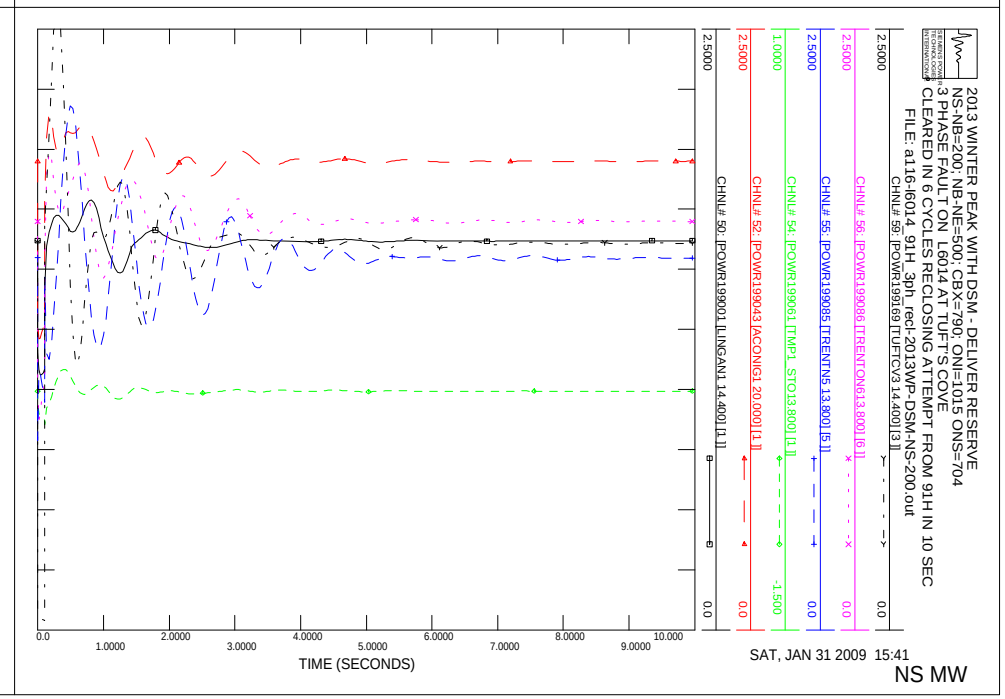
2013 WINTER PEAK WITH DSM - DELIVER RESERVE
NS-NB=200; NB-NE=500; CBX=790; ONI=1015 ONS=704
3 PHASE FAULT ON L6014 AT TUFT'S COVE
CLEARED IN 6 CYCLES RECLOSING ATTEMPT FROM 91H IN 10 SEC
FILE: a116-l6014_91H_3ph_recl-2013WP-DSM-NS-200.out
CHNL# 59: [POWR199169 [TUFTCV3 14.400] [3]]
CHNL# 56: [POWR199086 [TRENTON613.800] [6]]
CHNL# 55: [POWR199085 [TRENTN5 13.800] [5]]
CHNL# 54: [POWR199061 [TMP1 STO13.800] [1]]
CHNL# 52: [POWR199043 [ACONIG1 20.000] [1]]
CHNL# 50: [POWR199001 [LINGAN1 14.400] [1]]
2.5000
0.0
2.5000
0.0
2.5000
0.0
1.0000
-1.500
2.5000
0.0
2.5000
0.0
0.0
1.0000
2.0000
3.0000
4.0000
5.0000
6.0000
7.0000
8.0000
9.0000
10.000
TIME (SECONDS)
SAT, JAN 31 2009 15:41
NS MW

2013 WINTER PEAK WITH DSM - DELIVER RESERVE
NS-NB=200; NB-NE=500; CBX=790; ONI=1015 ONS=704
3 PHASE FAULT ON L6014 AT TUFT'S COVE
CLEARED IN 6 CYCLES RECLOSING ATTEMPT FROM 91H IN 10 SEC
FILE: a116-l6014_91H_3ph_recl-2013WP-DSM-NS-200.out
CHNL# 119: [VARS IR141-DIGBY]
CHNL# 118: [VARS IR137-STATIA]
CHNL# 117: [VARS IR114-GLENDHU]
CHNL# 116: [VARS IR84-DALHOUSIE]
CHNL# 115: [VARS IR82_NUTTBY]
CHNL# 114: [VARS IR45_AMHERST]
TIME (SECONDS)
SAT, JAN 31 2009 15:41
NS WIND MV

2013 WINTER PEAK WITH DSM - DELIVER RESERVE
NS-NB=200; NB-NE=500; CBX=790; ONI=1015 ONS=704
3 PHASE FAULT ON L6014 AT TUFT'S COVE
CLEARED IN 6 CYCLES RECLOSING ATTEMPT FROM 91H IN 10 SEC
FILE: a116-l6014_91H_3ph_recl-2013WP-DSM-NS-200.out
CHNL# 79: [POWER IR141-DIGBY]
CHNL# 78: [POWER IR137-STATIA]
CHNL# 77: [POWER IR114-GLENDHU]
CHNL# 76: [POWER IR84-DALHOUSIE]
CHNL# 75: [POWER IR82_NUTTBY]
CHNL# 74: [POWER IR45_AMHERST]
TIME (SECONDS)
SAT, JAN 31 2009 15:41
NS WIND MW

2013 WINTER PEAK WITH DSM - DELIVER RESERVE
NS-NB=200; NB-NE=500; CBX=790; ONI=1015 ONS=704
3 PHASE FAULT ON L6014 AT TUFT'S COVE
CLEARED IN 6 CYCLES RECLOSING ATTEMPT FROM 91H IN 10 SEC
FILE: a116-l6014_91H_3ph_recl-2013WP-DSM-NS-200.out
CHNL# 133: [VOLT199125 [ONSLOW 345.00]]
CHNL# 132: [VOLT199120 [HOPEWELL 345.00]]
CHNL# 131: [VOLT199045 [WOODBINE345.00]]
CHNL# 130: [VOLT190320 [SALBRY 345.00]]
CHNL# 128: [VOLT190004 [KESWICK 345.00]]
CHNL# 127: [VOLT 70002 [ORRINGTN345.00]]
TIME (SECONDS)
SAT, JAN 31 2009 15:41
"345KV VOLTAGE"

2013 WINTER PEAK WITH DSM - DELIVER RESERVE
NS-NB=200; NB-NE=500; CBX=790; ONI=1015 ONS=704
3 PHASE FAULT ON L6014 AT TUFT'S COVE
CLEARED IN 6 CYCLES RECLOSING ATTEMPT FROM 91H IN 10 SEC
FILE: a116-l6014_91H_3ph_recl-2013WP-DSM-NS-200.out
CHNL# 125: 60*(1+[FREQ199125 [ONSLOW 345.00]])
CHNL# 124: 60*(1+[FREQ199120 [HOPEWELL 345.00]])
CHNL# 123: 60*(1+[FREQ199045 [WOODBINE345.00]])
CHNL# 122: 60*(1+[FREQ190320 [SALBRY 345.00]])
CHNL# 121: 60*(1+[FREQ190197 [C.COVE 345.00]])
CHNL# 120: 60*(1+[FREQ 70002 [ORRINGTN345.00]])
TIME (SECONDS)
SAT, JAN 31 2009 15:41
FREQUENCY HZ

2013 WINTER PEAK WITH DSM - DELIVER RESERVE
NS-NB=200; NB-NE=500; CBX=790; ONI=1015 ONS=704
3 PHASE FAULT ON L6014 AT TUFT'S COVE
CLEARED IN 6 CYCLES RECLOSING ATTEMPT FROM 91H IN 10 SEC
FILE: a116-l6014_91H_3ph_recl-2013WP-DSM-NS-200.out
CHNL# 146: [VOLT199280 [TUSKET A138.00]]
CHNL# 145: [VOLT199193 [HHWAS 138.00]]
CHNL# 144: [VOLT199165 [TUFTCOVE138.00]]
CHNL# 143: [VOLT199135 [SPRNGHILL138.00]]
CHNL# 142: [VOLT199090 [SON-TREN138.00]]
CHNL# 141: [VOLT199051 [HASTINGS138.00]]
1.2000
0.70000
0.0
1.0000
2.0000
3.0000
4.0000
5.0000
6.0000
7.0000
8.0000
9.0000
10.000
TIME (SECONDS)
SAT, JAN 31 2009 15:41
138KV BUS VOLTS

2013 WINTER PEAK WITH DSM - DELIVER RESERVE
NS-NB=200; NB-NE=500; CBX=790; ONI=1015 ONS=704
3 PHASE FAULT ON L6014 AT TUFT'S COVE
CLEARED IN 6 CYCLES RECLOSING ATTEMPT FROM 91H IN 10 SEC
FILE: a116-l6014_91H_3ph_recl-2013WP-DSM-NS-200.out
CHNL# 140: [VOLT199240 [BWATER A230.00]]
CHNL# 139: [VOLT199200 [BRUSHY 230.00]]
CHNL# 138: [VOLT199130 [ONSLOW 230.00]]
CHNL# 137: [VOLT199050 [HASTINGS230.00]]
CHNL# 136: [VOLT199044 [PT.ACONI230.00]]
CHNL# 135: [VOLT199000 [LINGAN 230.00]]
1.2000
0.70000
0.0
1.0000
2.0000
3.0000
4.0000
5.0000
6.0000
7.0000
8.0000
9.0000
10.000
TIME (SECONDS)
SAT, JAN 31 2009 15:41
230KV BUS VOLTS

2013 WINTER PEAK WITH DSM - DELIVER RESERVE
NS-NB=200; NB-NE=500; CBX=790; ONI=1015 ONS=704
3 PHASE FAULT ON L6014 AT TUFT'S COVE
CLEARED IN 6 CYCLES RECLOSING ATTEMPT FROM 91H IN 10 SEC
FILE: a116-l6014_91H_3ph_recl-2013WP-DSM-NS-200.out
CHNL# 217: [L6513MW]
CHNL# 215: [L6503MW]
CHNL# 197: [L8003MW]
CHNL# 195: [L8004MW]
CHNL# 193: [L8001MW]
CHNL# 221: [L3001MW]
250.00
-250.0
500.00
0.0
1000.0
-1000.
0.0
1.0000
2.0000
3.0000
4.0000
5.0000
6.0000
7.0000
8.0000
9.0000
10.000
TIME (SECONDS)
SAT, JAN 31 2009 15:41
LINE FLOW MW

2013 WINTER PEAK WITH DSM - DELIVER RESERVE
NS-NB=200; NB-NE=500; CBX=790; ONI=1015 ONS=704
3 PHASE FAULT ON L6014 AT TUFT'S COVE
CLEARED IN 6 CYCLES RECLOSING ATTEMPT FROM 91H IN 10 SEC
FILE: a116-l6014_91H_3ph_recl-2013WP-DSM-NS-200.out
CHNL# 154: [IR141-DIGBYH69.0 VOLTS]
CHNL# 153: [IR137-STATIG25.0 VOLTS]
CHNL# 152: [IR114-GLENDH138.0 VOLTS]
CHNL# 151: [IR84-DALHOHV230.0 VOLTS]
CHNL# 150: [IR82 NUTBHV69.0 VOLTS]
CHNL# 149: [IR45 AMHERTP138.0 VOLTS]
1.2000
0.70000
0.0
1.0000
2.0000
3.0000
4.0000
5.0000
6.0000
7.0000
8.0000
9.0000
10.000
TIME (SECONDS)
SAT, JAN 31 2009 15:41
WIND BUS VOLTS

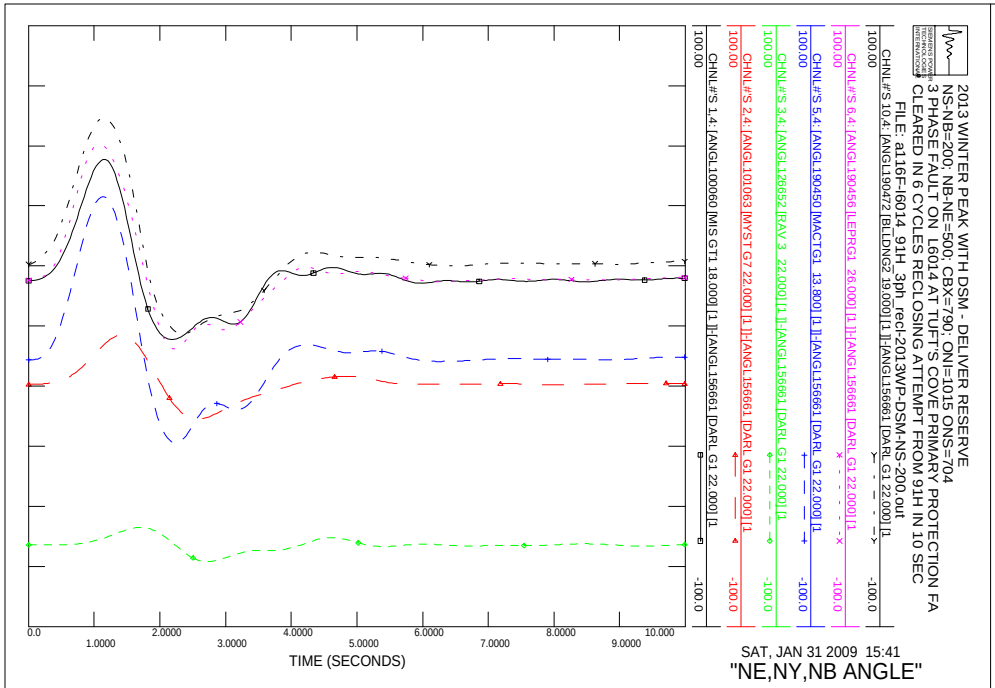
2013 WINTER PEAK WITH DSM - DELIVER RESERVE
NS-NB=200; NB-NE=500; CBX=790; ONI=1015 ONS=704
3 PHASE FAULT ON L6014 AT TUFT'S COVE PRIMARY PROTECTION FA
CLEARED IN 6 CYCLES RECLOSING ATTEMPT FROM 91H IN 10 SEC
FILE: a116F-I6014_91H_3ph_recl-2013WP-DSM-NS-200.out
CHNL#'S 10,4: [ANGL190472 [BLLDNG2 19.000] [1]]-[ANGL156661 [DARL G1 22.000] [1
CHNL#'S 6,4: [ANGL190456 [LEPRG1 26.000] [1]]-[ANGL156661 [DARL G1 22.000] [1
CHNL#'S 5,4: [ANGL190450 [MACTG1 13.800] [1]]-[ANGL156661 [DARL G1 22.000] [1
CHNL#'S 3,4: [ANGL126652 [RAV 3 22.000] [1]]-[ANGL156661 [DARL G1 22.000] [1
CHNL#'S 2,4: [ANGL101063 [MYST G7 22.000] [1]]-[ANGL156661 [DARL G1 22.000] [1
CHNL#'S 1,4: [ANGL100060 [MIS GT1 18.000] [1]]-[ANGL156661 [DARL G1 22.000] [1
100.00
-100.0
TIME (SECONDS)
SAT, JAN 31 2009 15:41
"NE,NY,NB ANGLE"

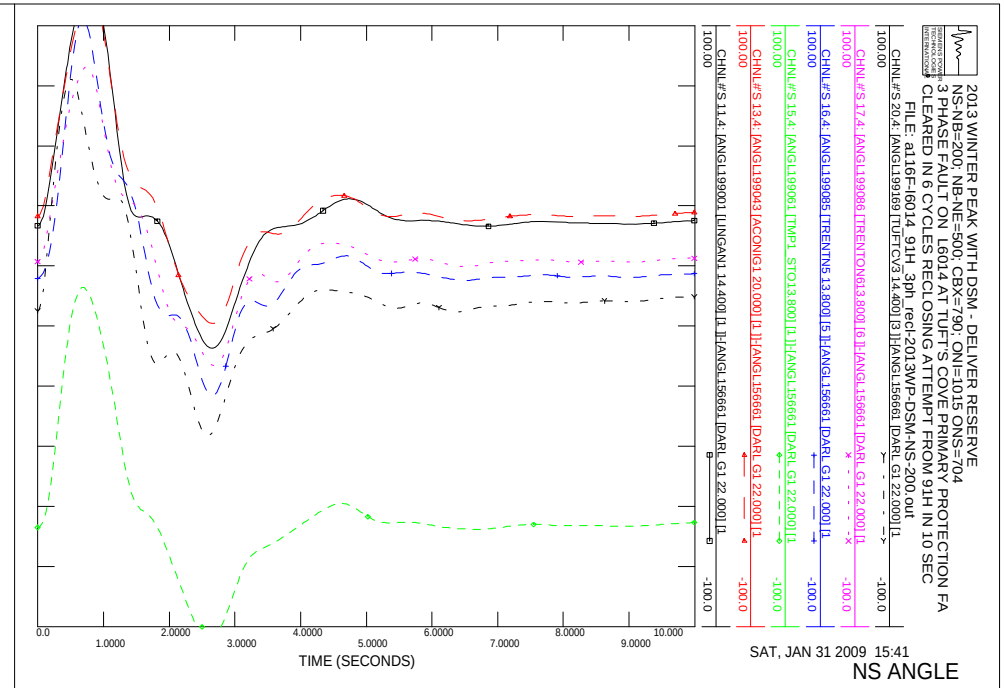
2013 WINTER PEAK WITH DSM - DELIVER RESERVE
NS-NB=200; NB-NE=500; CBX=790; ONI=1015 ONS=704
3 PHASE FAULT ON L6014 AT TUFT'S COVE PRIMARY PROTECTION FA
CLEARED IN 6 CYCLES RECLOSING ATTEMPT FROM 91H IN 10 SEC
FILE: a116F-I6014_91H_3ph_recl-2013WP-DSM-NS-200.out
CHNL#'S 20,4: [ANGL199169 [TUFTCV3 14.400] [3]]-[ANGL156661 [DARL G1 22.000] [1
CHNL#'S 17,4: [ANGL199086 [TRENTON613.800] [6]]-[ANGL156661 [DARL G1 22.000] [1
CHNL#'S 16,4: [ANGL199085 [TRENTN5 13.800] [5]]-[ANGL156661 [DARL G1 22.000] [1
CHNL#'S 15,4: [ANGL199061 [TMP1 STO13.800] [1]]-[ANGL156661 [DARL G1 22.000] [1
CHNL#'S 13,4: [ANGL199043 [ACONIG1 20.000] [1]]-[ANGL156661 [DARL G1 22.000] [1
CHNL#'S 11,4: [ANGL199001 [LINGAN1 14.400] [1]]-[ANGL156661 [DARL G1 22.000] [1
100.00
-100.0
TIME (SECONDS)
SAT, JAN 31 2009 15:41
NS ANGLE

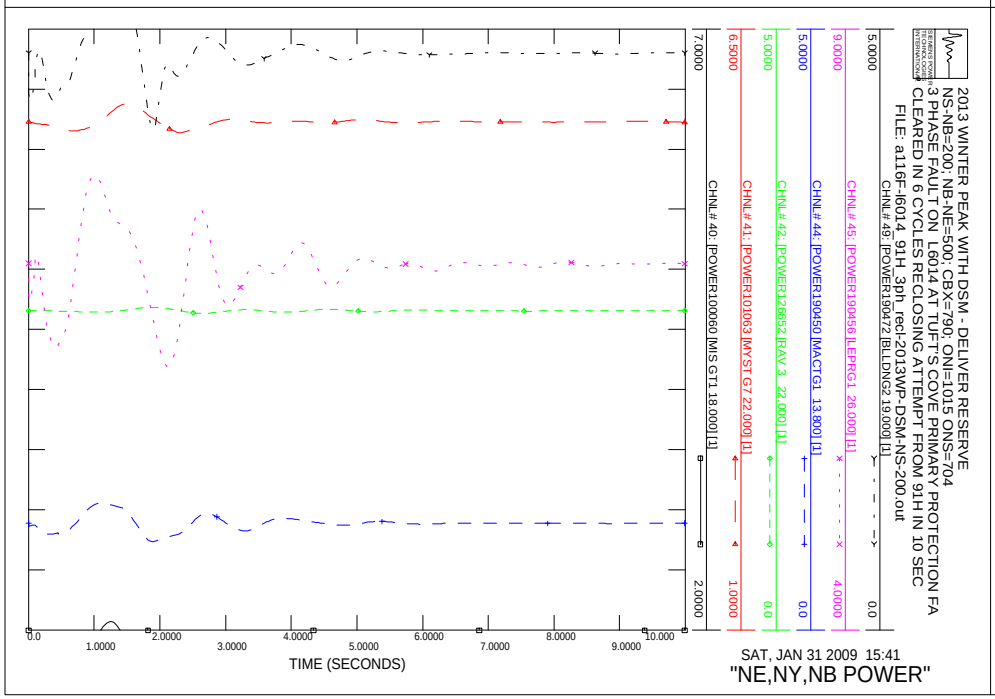
2013 WINTER PEAK WITH DSM - DELIVER RESERVE
NS-NB=200; NB-NE=500; CBX=790; ONI=1015 ONS=704
3 PHASE FAULT ON L6014 AT TUFT'S COVE PRIMARY PROTECTION FA
CLEARED IN 6 CYCLES RECLOSING ATTEMPT FROM 91H IN 10 SEC
FILE: a116F-I6014_91H_3ph_recl-2013WP-DSM-NS-200.out
CHNL# 49: [POWER190472 [BLLDNG2 19.000] [1]
CHNL# 45: [POWER190456 [LEPRG1 26.000] [1]
CHNL# 44: [POWER190450 [MACTG1 13.800] [1]
CHNL# 42: [POWER126652 [RAV 3 22.000] [1]
CHNL# 41: [POWER101063 [MYST G7 22.000] [1]
CHNL# 40: [POWER100060 [MIS GT1 18.000] [1]
5.0000
0.0
TIME (SECONDS)
SAT, JAN 31 2009 15:41
"NE,NY,NB POWER"

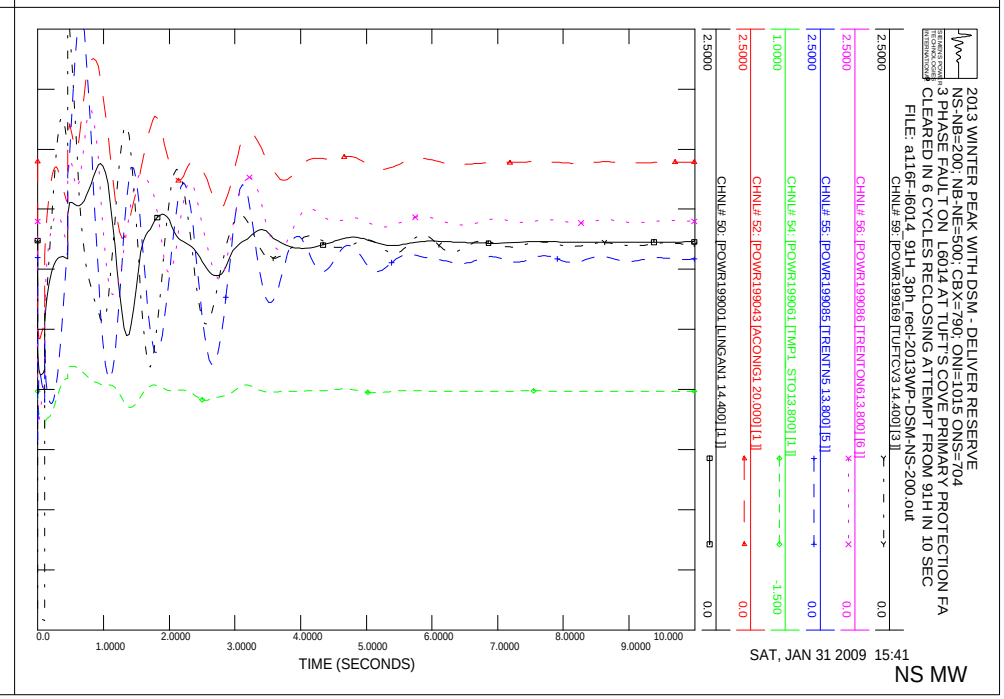
2013 WINTER PEAK WITH DSM - DELIVER RESERVE
NS-NB=200; NB-NE=500; CBX=790; ONI=1015 ONS=704
3 PHASE FAULT ON L6014 AT TUFT'S COVE PRIMARY PROTECTION FA
CLEARED IN 6 CYCLES RECLOSING ATTEMPT FROM 91H IN 10 SEC
FILE: a116F-I6014_91H_3ph_recl-2013WP-DSM-NS-200.out
CHNL# 59: [POWR199169 [TUFTCV3 14.400] [3]]
CHNL# 56: [POWR199086 [TRENTON613.800] [6]]
CHNL# 55: [POWR199085 [TRENTN5 13.800] [5]]
CHNL# 54: [POWR199061 [TMP1 STO13.800] [1]]
CHNL# 52: [POWR199043 [ACONIG1 20.000] [1]]
CHNL# 50: [POWR199001 [LINGAN1 14.400] [1]]
2.5000
0.0
TIME (SECONDS)
SAT, JAN 31 2009 15:41
NS MW

2013 WINTER PEAK WITH DSM - DELIVER RESERVE
NS-NB=200; NB-NE=500; CBX=790; ONI=1015 ONS=704
3 PHASE FAULT ON L6014 AT TUFT'S COVE PRIMARY PROTECTION FA
CLEARED IN 6 CYCLES RECLOSING ATTEMPT FROM 91H IN 10 SEC
FILE: a116f-l6014_91H_3ph_recl-2013WP-DSM-NS-200.out
CHNL# 119: [VARS IR141-DIGBY]
CHNL# 118: [VARS IR137-STATIA]
CHNL# 117: [VARS IR114-GLENDHU]
CHNL# 116: [VARS IR84-DALHOUSIE]
CHNL# 115: [VARS IR82_NUTTBY]
CHNL# 114: [VARS IR45_AMHERST]
TIME (SECONDS)
SAT, JAN 31 2009 15:41
NS WIND MV

2013 WINTER PEAK WITH DSM - DELIVER RESERVE
NS-NB=200; NB-NE=500; CBX=790; ONI=1015 ONS=704
3 PHASE FAULT ON L6014 AT TUFT'S COVE PRIMARY PROTECTION FA
CLEARED IN 6 CYCLES RECLOSING ATTEMPT FROM 91H IN 10 SEC
FILE: a116f-l6014_91H_3ph_recl-2013WP-DSM-NS-200.out
CHNL# 79: [POWER IR141-DIGBY]
CHNL# 78: [POWER IR137-STATIA]
CHNL# 77: [POWER IR114-GLENDHU]
CHNL# 76: [POWER IR84-DALHOUSIE]
CHNL# 75: [POWER IR82_NUTTBY]
CHNL# 74: [POWER IR45_AMHERST]
TIME (SECONDS)
SAT, JAN 31 2009 15:41
NS WIND MW

2013 WINTER PEAK WITH DSM - DELIVER RESERVE
NS-NB=200; NB-NE=500; CBX=790; ONI=1015 ONS=704
3 PHASE FAULT ON L6014 AT TUFT'S COVE PRIMARY PROTECTION FA
CLEARED IN 6 CYCLES RECLOSING ATTEMPT FROM 91H IN 10 SEC
FILE: a116f-l6014_91H_3ph_recl-2013WP-DSM-NS-200.out
CHNL# 133: [VOLT199125 [ONSLOW 345.00]]
CHNL# 132: [VOLT199120 [HOPEWELL 345.00]]
CHNL# 131: [VOLT199045 [WOODBINE345.00]]
CHNL# 130: [VOLT190320 [SALBRY 345.00]]
CHNL# 128: [VOLT190004 [KESWICK 345.00]]
CHNL# 127: [VOLT 70002 [ORRINGTN345.00]]
TIME (SECONDS)
SAT, JAN 31 2009 15:41
"345KV VOLTAGE"

2013 WINTER PEAK WITH DSM - DELIVER RESERVE
NS-NB=200; NB-NE=500; CBX=790; ONI=1015 ONS=704
3 PHASE FAULT ON L6014 AT TUFT'S COVE PRIMARY PROTECTION FA
CLEARED IN 6 CYCLES RECLOSING ATTEMPT FROM 91H IN 10 SEC
FILE: a116f-l6014_91H_3ph_recl-2013WP-DSM-NS-200.out
CHNL# 125: 60*(1+[FREQ199125 [ONSLOW 345.00]])
CHNL# 124: 60*(1+[FREQ199120 [HOPEWELL 345.00]])
CHNL# 123: 60*(1+[FREQ199045 [WOODBINE345.00]])
CHNL# 122: 60*(1+[FREQ190320 [SALBRY 345.00]])
CHNL# 121: 60*(1+[FREQ190197 [C.COVE 345.00]])
CHNL# 120: 60*(1+[FREQ 70002 [ORRINGTN345.00]])
TIME (SECONDS)
SAT, JAN 31 2009 15:41
FREQUENCY HZ

2013 WINTER PEAK WITH DSM - DELIVER RESERVE
NS-NB=200; NB-NE=500; CBX=790; ONI=1015 ONS=704
3 PHASE FAULT ON L6014 AT TUFT'S COVE PRIMARY PROTECTION FA
CLEARED IN 6 CYCLES RECLOSING ATTEMPT FROM 91H IN 10 SEC
FILE: a116F-I6014_91H_3ph_recl-2013WP-DSM-NS-200.out
CHNL# 146: [VOLT199280 [TUSKET A138.00]] 1.2000 0.70000
CHNL# 145: [VOLT199193 [HWAS 138.00]] 1.2000 0.70000
CHNL# 144: [VOLT199165 [TUFT COVE138.00]] 1.2000 0.70000
CHNL# 143: [VOLT199138 [SPRNGHIL138.00]] 1.2000 0.70000
CHNL# 142: [VOLT199090 [SON-TREN138.00]] 1.2000 0.70000
CHNL# 141: [VOLT199051 [HASTINGS138.00]] 1.2000 0.70000
0.0 1.0000 2.0000 3.0000 4.0000 5.0000 6.0000 7.0000 8.0000 9.0000 10.000
TIME (SECONDS)
SAT, JAN 31 2009 15:41
138KV BUS VOLTS

2013 WINTER PEAK WITH DSM - DELIVER RESERVE
NS-NB=200; NB-NE=500; CBX=790; ONI=1015 ONS=704
3 PHASE FAULT ON L6014 AT TUFT'S COVE PRIMARY PROTECTION FA
CLEARED IN 6 CYCLES RECLOSING ATTEMPT FROM 91H IN 10 SEC
FILE: a116F-I6014_91H_3ph_recl-2013WP-DSM-NS-200.out
CHNL# 140: [VOLT199240 [BWATER A230.00]] 1.2000 0.70000
CHNL# 139: [VOLT199200 [BRUSHY 230.00]] 1.2000 0.70000
CHNL# 138: [VOLT199130 [ONSLOW 230.00]] 1.2000 0.70000
CHNL# 137: [VOLT199050 [HASTINGS230.00]] 1.2000 0.70000
CHNL# 136: [VOLT199044 [PT.ACONI230.00]] 1.2000 0.70000
CHNL# 135: [VOLT199000 [LINGAN 230.00]] 1.2000 0.70000
0.0 1.0000 2.0000 3.0000 4.0000 5.0000 6.0000 7.0000 8.0000 9.0000 10.000
TIME (SECONDS)
SAT, JAN 31 2009 15:41
230KV BUS VOLTS

2013 WINTER PEAK WITH DSM - DELIVER RESERVE
NS-NB=200; NB-NE=500; CBX=790; ONI=1015 ONS=704
3 PHASE FAULT ON L6014 AT TUFT'S COVE PRIMARY PROTECTION FA
CLEARED IN 6 CYCLES RECLOSING ATTEMPT FROM 91H IN 10 SEC
FILE: a116F-I6014_91H_3ph_recl-2013WP-DSM-NS-200.out
CHNL# 217: [L6533MW] 250.00 -250.0
CHNL# 215: [L6503MW] 500.00 0.0
CHNL# 197: [L8003MW] 1000.0 0.0
CHNL# 195: [L8004MW] 1000.0 0.0
CHNL# 193: [L8001MW] 1000.0 -1000.
CHNL# 221: [L3001MW] 1000.0 -1000.
0.0 1.0000 2.0000 3.0000 4.0000 5.0000 6.0000 7.0000 8.0000 9.0000 10.000
TIME (SECONDS)
SAT, JAN 31 2009 15:41
LINE FLOW MW

2013 WINTER PEAK WITH DSM - DELIVER RESERVE
NS-NB=200; NB-NE=500; CBX=790; ONI=1015 ONS=704
3 PHASE FAULT ON L6014 AT TUFT'S COVE PRIMARY PROTECTION FA
CLEARED IN 6 CYCLES RECLOSING ATTEMPT FROM 91H IN 10 SEC
FILE: a116F-I6014_91H_3ph_recl-2013WP-DSM-NS-200.out
CHNL# 154: [IR141-DIGBYH69.0 VOLTS] 1.2000 0.70000
CHNL# 153: [IR137-STATIG25.0 VOLTS] 1.2000 0.70000
CHNL# 152: [IR114-GLENDH138.0 VOLTS] 1.2000 0.70000
CHNL# 151: [IR84-DALHOHV230.0 VOLTS] 1.2000 0.70000
CHNL# 150: [IR82_NUTBHV69.0 VOLTS] 1.2000 0.70000
CHNL# 149: [IR45_AMHERTP138.0 VOLTS] 1.2000 0.70000
0.0 1.0000 2.0000 3.0000 4.0000 5.0000 6.0000 7.0000 8.0000 9.0000 10.000
TIME (SECONDS)
SAT, JAN 31 2009 15:41
WIND BUS VOLTS

2013 WINTER PEAK WITH DSM - DELIVER RESERVE
NS-NB=200; NB-NE=500; CBX=790; ONI=1015 ONS=704
3 PHASE FAULT ON L6014 AT KEMPT RD
CLEARED IN 6 CYCLES RECLOSING ATTEMPT FROM 91H IN 10 SEC
FILE: a117-l6014_104H_3ph_recl-2013WP-DSM-NS-200.out
CHNL# 20: [ANGL199169 [TUFTCV3 14.400] [3]] [ANGL156661 [DARL G1 22.000] [1]]
CHNL# 17: [ANGL199086 [TRENTON613.800] [6]] [ANGL156661 [DARL G1 22.000] [1]]
CHNL# 16: [ANGL199085 [TRENTN5 13.800] [5]] [ANGL156661 [DARL G1 22.000] [1]]
CHNL# 15: [ANGL199061 [TMP1 STO13.800] [1]] [ANGL156661 [DARL G1 22.000] [1]]
CHNL# 13: [ANGL199043 [ACONIG1 20.000] [1]] [ANGL156661 [DARL G1 22.000] [1]]
CHNL# 11: [ANGL199001 [LINGAN1 14.400] [1]] [ANGL156661 [DARL G1 22.000] [1]]
100.00
-100.0
0.0
1.0000
2.0000
3.0000
4.0000
5.0000
6.0000
7.0000
8.0000
9.0000
10.000
TIME (SECONDS)
SAT, JAN 31 2009 15:41
NS ANGLE

2013 WINTER PEAK WITH DSM - DELIVER RESERVE
NS-NB=200; NB-NE=500; CBX=790; ONI=1015 ONS=704
3 PHASE FAULT ON L6014 AT KEMPT RD
CLEARED IN 6 CYCLES RECLOSING ATTEMPT FROM 91H IN 10 SEC
FILE: a117-l6014_104H_3ph_recl-2013WP-DSM-NS-200.out
CHNL# 10: [ANGL190472 [BLLDNG2 19.000] [1]] [ANGL156661 [DARL G1 22.000] [1]]
CHNL# 6: [ANGL190456 [LEPRG1 26.000] [1]] [ANGL156661 [DARL G1 22.000] [1]]
CHNL# 5: [ANGL190450 [MACTG1 13.800] [1]] [ANGL156661 [DARL G1 22.000] [1]]
CHNL# 3: [ANGL126652 [RAV 3 22.000] [1]] [ANGL156661 [DARL G1 22.000] [1]]
CHNL# 2: [ANGL101063 [MYST G7 22.000] [1]] [ANGL156661 [DARL G1 22.000] [1]]
CHNL# 1: [ANGL100060 [MIS GT1 18.000] [1]] [ANGL156661 [DARL G1 22.000] [1]]
100.00
-100.0
0.0
1.0000
2.0000
3.0000
4.0000
5.0000
6.0000
7.0000
8.0000
9.0000
10.000
TIME (SECONDS)
SAT, JAN 31 2009 15:41
"NE,NY,NB ANGLE"

2013 WINTER PEAK WITH DSM - DELIVER RESERVE
NS-NB=200; NB-NE=500; CBX=790; ONI=1015 ONS=704
3 PHASE FAULT ON L6014 AT KEMPT RD
CLEARED IN 6 CYCLES RECLOSING ATTEMPT FROM 91H IN 10 SEC
FILE: a117-l6014_104H_3ph_recl-2013WP-DSM-NS-200.out
CHNL# 59: [POWR199169 [TUFTCV3 14.400] [3]]
CHNL# 56: [POWR199086 [TRENTON613.800] [6]]
CHNL# 55: [POWR199085 [TRENTN5 13.800] [5]]
CHNL# 54: [POWR199061 [TMP1 STO13.800] [1]]
CHNL# 52: [POWR199043 [ACONIG1 20.000] [1]]
CHNL# 50: [POWR199001 [LINGAN1 14.400] [1]]
2.5000
1.0000
-1.500
0.0
0.0
1.0000
2.0000
3.0000
4.0000
5.0000
6.0000
7.0000
8.0000
9.0000
10.000
TIME (SECONDS)
SAT, JAN 31 2009 15:41
NS MW

2013 WINTER PEAK WITH DSM - DELIVER RESERVE
NS-NB=200; NB-NE=500; CBX=790; ONI=1015 ONS=704
3 PHASE FAULT ON L6014 AT KEMPT RD
CLEARED IN 6 CYCLES RECLOSING ATTEMPT FROM 91H IN 10 SEC
FILE: a117-l6014_104H_3ph_recl-2013WP-DSM-NS-200.out
CHNL# 49: [POWER190472 [BLLDNG2 19.000] [1]]
CHNL# 45: [POWER190456 [LEPRG1 26.000] [1]]
CHNL# 44: [POWER190450 [MACTG1 13.800] [1]]
CHNL# 42: [POWER126652 [RAV 3 22.000] [1]]
CHNL# 41: [POWER101063 [MYST G7 22.000] [1]]
CHNL# 40: [POWER100060 [MIS GT1 18.000] [1]]
5.0000
9.0000
4.0000
5.0000
0.0
0.0
6.5000
1.0000
7.0000
2.0000
1.0000
2.0000
3.0000
4.0000
5.0000
6.0000
7.0000
8.0000
9.0000
10.000
TIME (SECONDS)
SAT, JAN 31 2009 15:41
"NE,NY,NB POWER"

NS WIND MV

NS WIND MW

"345KV VOLTAGE"

FREQUENCY HZ

2013 WINTER PEAK WITH DSM - DELIVER RESERVE
NS-NB=200; NB-NE=500; CBX=790; ONI=1015 ONS=704
3 PHASE FAULT ON L6014 AT KEMPT RD
CLEARED IN 6 CYCLES RECLOSING ATTEMPT FROM 91H IN 10 SEC
FILE: a117-l6014_104H_3ph_recl-2013WP-DSM-NS-200.out
CHNL# 146: [VOLT199280 [TUSKET A138.00]]
CHNL# 145: [VOLT199193 [HHWAS 138.00]]
CHNL# 144: [VOLT199165 [TUFTCOVE138.00]]
CHNL# 143: [VOLT199138: [SPRNGHILL138.00]]
CHNL# 142: [VOLT199090 [SON-TREN138.00]]
CHNL# 141: [VOLT199051 [HASTINGS138.00]]
1.2000
0.70000
0.0
1.0000
2.0000
3.0000
4.0000
5.0000
6.0000
7.0000
8.0000
9.0000
10.000
TIME (SECONDS)
SAT, JAN 31 2009 15:41
138KV BUS VOLTS

2013 WINTER PEAK WITH DSM - DELIVER RESERVE
NS-NB=200; NB-NE=500; CBX=790; ONI=1015 ONS=704
3 PHASE FAULT ON L6014 AT KEMPT RD
CLEARED IN 6 CYCLES RECLOSING ATTEMPT FROM 91H IN 10 SEC
FILE: a117-l6014_104H_3ph_recl-2013WP-DSM-NS-200.out
CHNL# 140: [VOLT199240 [BWATER A230.00]]
CHNL# 139: [VOLT199200 [BRUSHY 230.00]]
CHNL# 138: [VOLT199130 [ONSLOW 230.00]]
CHNL# 137: [VOLT199050 [HASTINGS230.00]]
CHNL# 136: [VOLT199044 [PT.ACONI230.00]]
CHNL# 135: [VOLT199000 [LINGAN 230.00]]
1.2000
0.70000
0.0
1.0000
2.0000
3.0000
4.0000
5.0000
6.0000
7.0000
8.0000
9.0000
10.000
TIME (SECONDS)
SAT, JAN 31 2009 15:41
230KV BUS VOLTS

2013 WINTER PEAK WITH DSM - DELIVER RESERVE
NS-NB=200; NB-NE=500; CBX=790; ONI=1015 ONS=704
3 PHASE FAULT ON L6014 AT KEMPT RD
CLEARED IN 6 CYCLES RECLOSING ATTEMPT FROM 91H IN 10 SEC
FILE: a117-l6014_104H_3ph_recl-2013WP-DSM-NS-200.out
CHNL# 217: [L6513MW]
CHNL# 215: [L6503MW]
CHNL# 197: [L8003MW]
CHNL# 195: [L8004MW]
CHNL# 193: [L8001MW]
CHNL# 221: [L3001MW]
250.00
-250.0
500.00
0.0
1000.0
-1000.
0.0
1.0000
2.0000
3.0000
4.0000
5.0000
6.0000
7.0000
8.0000
9.0000
10.000
TIME (SECONDS)
SAT, JAN 31 2009 15:41
LINE FLOW MW

2013 WINTER PEAK WITH DSM - DELIVER RESERVE
NS-NB=200; NB-NE=500; CBX=790; ONI=1015 ONS=704
3 PHASE FAULT ON L6014 AT KEMPT RD
CLEARED IN 6 CYCLES RECLOSING ATTEMPT FROM 91H IN 10 SEC
FILE: a117-l6014_104H_3ph_recl-2013WP-DSM-NS-200.out
CHNL# 154: [IR141-DIGBYH69.0 VOLTS]
CHNL# 153: [IR137-STATIG25.0 VOLTS]
CHNL# 152: [IR114-GLENDH138.0 VOLTS]
CHNL# 151: [IR84-DALHOHV230.0 VOLTS]
CHNL# 150: [IR82 NUTBHV69.0 VOLTS]
CHNL# 149: [IR45 AMHERTP138.0 VOLTS]
1.2000
0.70000
0.0
1.0000
2.0000
3.0000
4.0000
5.0000
6.0000
7.0000
8.0000
9.0000
10.000
TIME (SECONDS)
SAT, JAN 31 2009 15:41
WIND BUS VOLTS

2013 WINTER PEAK WITH DSM - DELIVER RESERVE
NS-NB=200; NB-NE=500; CBX=790; ONI=1015 ONS=704
3 PHASE FAULT ON L6014 AT KEMPT RD PRIMARY FAILED
CLEARED IN 6 CYCLES RECLOSING ATTEMPT FROM 91H IN 10 SEC
FILE: a117F-l6014_104H_3ph_rect-2013WP-DSM-NS-200.out
CHNL# 119: [VARS IR141-DIGBY]
CHNL# 118: [VARS IR137-STATIA]
CHNL# 117: [VARS IR114-GLENDHU]
CHNL# 116: [VARS IR84-DALHOUSIE]
CHNL# 115: [VARS IR82_NUTTBY]
CHNL# 114: [VARS IR45_AMHERST]
TIME (SECONDS)
SAT, JAN 31 2009 15:41
NS WIND MV

2013 WINTER PEAK WITH DSM - DELIVER RESERVE
NS-NB=200; NB-NE=500; CBX=790; ONI=1015 ONS=704
3 PHASE FAULT ON L6014 AT KEMPT RD PRIMARY FAILED
CLEARED IN 6 CYCLES RECLOSING ATTEMPT FROM 91H IN 10 SEC
FILE: a117F-l6014_104H_3ph_rect-2013WP-DSM-NS-200.out
CHNL# 79: [POWER IR141-DIGBY]
CHNL# 78: [POWER IR137-STATIA]
CHNL# 77: [POWER IR114-GLENDHU]
CHNL# 76: [POWER IR84-DALHOUSIE]
CHNL# 75: [POWER IR82_NUTTBY]
CHNL# 74: [POWER IR45_AMHERST]
TIME (SECONDS)
SAT, JAN 31 2009 15:41
NS WIND MW

2013 WINTER PEAK WITH DSM - DELIVER RESERVE
NS-NB=200; NB-NE=500; CBX=790; ONI=1015 ONS=704
3 PHASE FAULT ON L6014 AT KEMPT RD PRIMARY FAILED
CLEARED IN 6 CYCLES RECLOSING ATTEMPT FROM 91H IN 10 SEC
FILE: a117F-l6014_104H_3ph_rect-2013WP-DSM-NS-200.out
CHNL# 133: [VOLT199125 [ONSLOW 345.00]]
CHNL# 132: [VOLT199120 [HOPEWELL 345.00]]
CHNL# 131: [VOLT199045 [WOODBINE345.00]]
CHNL# 130: [VOLT190320 [SALBRY 345.00]]
CHNL# 128: [VOLT190004 [KESWICK 345.00]]
CHNL# 127: [VOLT 70002 [ORRINGTN345.00]]
TIME (SECONDS)
SAT, JAN 31 2009 15:41
"345KV VOLTAGE"

2013 WINTER PEAK WITH DSM - DELIVER RESERVE
NS-NB=200; NB-NE=500; CBX=790; ONI=1015 ONS=704
3 PHASE FAULT ON L6014 AT KEMPT RD PRIMARY FAILED
CLEARED IN 6 CYCLES RECLOSING ATTEMPT FROM 91H IN 10 SEC
FILE: a117F-l6014_104H_3ph_rect-2013WP-DSM-NS-200.out
CHNL# 125: 60*(1+[FREQ199125 [ONSLOW 345.00]])
CHNL# 124: 60*(1+[FREQ199120 [HOPEWELL 345.00]])
CHNL# 123: 60*(1+[FREQ199045 [WOODBINE345.00]])
CHNL# 122: 60*(1+[FREQ190320 [SALBRY 345.00]])
CHNL# 121: 60*(1+[FREQ190197 [C.COVE 345.00]])
CHNL# 120: 60*(1+[FREQ 70002 [ORRINGTN345.00]])
TIME (SECONDS)
SAT, JAN 31 2009 15:41
FREQUENCY HZ

2013 WINTER PEAK WITH DSM - DELIVER RESERVE
NS-NB=200; NB-NE=500; CBX=790; ONI=1015 ONS=704
3 PHASE FAULT ON L6014 AT KEMPT RD PRIMARY FAILED
CLEARED IN 6 CYCLES RECLOSING ATTEMPT FROM 91H IN 10 SEC
FILE: a117F-l6014_104H_3ph_recl-2013WP-DSM-NS-200.out
CHNL# 146: [VOLT199280 [TUSKET A138.00]]
CHNL# 145: [VOLT199193 [HHWAS 138.00]]
CHNL# 144: [VOLT199165 [TUFTCOVE138.00]]
CHNL# 143: [VOLT199138: [SPRNGHILL138.00]]
CHNL# 142: [VOLT199090 [50N-TREN138.00]]
CHNL# 141: [VOLT199051 [HASTINGS138.00]]
1.2000
0.70000
0.0
1.0000
2.0000
3.0000
4.0000
5.0000
6.0000
7.0000
8.0000
9.0000
10.000
TIME (SECONDS)
SAT, JAN 31 2009 15:41
138KV BUS VOLTS

2013 WINTER PEAK WITH DSM - DELIVER RESERVE
NS-NB=200; NB-NE=500; CBX=790; ONI=1015 ONS=704
3 PHASE FAULT ON L6014 AT KEMPT RD PRIMARY FAILED
CLEARED IN 6 CYCLES RECLOSING ATTEMPT FROM 91H IN 10 SEC
FILE: a117F-l6014_104H_3ph_recl-2013WP-DSM-NS-200.out
CHNL# 140: [VOLT199240 [BWATER A230.00]]
CHNL# 139: [VOLT199200 [BRUSHY 230.00]]
CHNL# 138: [VOLT199130 [ONSLOW 230.00]]
CHNL# 137: [VOLT199050 [HASTINGS230.00]]
CHNL# 136: [VOLT199044 [PT.ACONI230.00]]
CHNL# 135: [VOLT199000 [LINGAN 230.00]]
1.2000
0.70000
0.0
1.0000
2.0000
3.0000
4.0000
5.0000
6.0000
7.0000
8.0000
9.0000
10.000
TIME (SECONDS)
SAT, JAN 31 2009 15:41
230KV BUS VOLTS

2013 WINTER PEAK WITH DSM - DELIVER RESERVE
NS-NB=200; NB-NE=500; CBX=790; ONI=1015 ONS=704
3 PHASE FAULT ON L6014 AT KEMPT RD PRIMARY FAILED
CLEARED IN 6 CYCLES RECLOSING ATTEMPT FROM 91H IN 10 SEC
FILE: a117F-l6014_104H_3ph_recl-2013WP-DSM-NS-200.out
CHNL# 217: [L6513MW]
CHNL# 215: [L6503MW]
CHNL# 197: [L8003MW]
CHNL# 195: [L8004MW]
CHNL# 193: [L8001MW]
CHNL# 221: [L3001MW]
250.00
500.00
1000.0
0.0
-250.0
-1000.
0.0
1.0000
2.0000
3.0000
4.0000
5.0000
6.0000
7.0000
8.0000
9.0000
10.000
TIME (SECONDS)
SAT, JAN 31 2009 15:41
LINE FLOW MW

2013 WINTER PEAK WITH DSM - DELIVER RESERVE
NS-NB=200; NB-NE=500; CBX=790; ONI=1015 ONS=704
3 PHASE FAULT ON L6014 AT KEMPT RD PRIMARY FAILED
CLEARED IN 6 CYCLES RECLOSING ATTEMPT FROM 91H IN 10 SEC
FILE: a117F-l6014_104H_3ph_recl-2013WP-DSM-NS-200.out
CHNL# 154: [IR141-DIGBYH69.0 VOLTS]
CHNL# 153: [IR137-STATIG25.0 VOLTS]
CHNL# 152: [IR114-GLENDH138.0 VOLTS]
CHNL# 151: [IR84-DALHOHV230.0 VOLTS]
CHNL# 150: [IR82_NUTBHV69.0 VOLTS]
CHNL# 149: [IR45_AMHERTP138.0 VOLTS]
1.2000
0.70000
0.0
1.0000
2.0000
3.0000
4.0000
5.0000
6.0000
7.0000
8.0000
9.0000
10.000
TIME (SECONDS)
SAT, JAN 31 2009 15:41
WIND BUS VOLTS

2013 WINTER PEAK WITH DSM - DELIVER RESERVE
NS-NB=200; NB-NE=500; CBX=790; ONI=1015 ONS=704
3 PHASE FAULT ON L6014 AT KEMPT RD PRIMARY FAILED
TUFTS COVE UNITS TRIP
FILE: a117.1F-I6014_104H_3ph_recl-2013WP-DSM-NS-200.out
CHNL#'S 20:4 [ANGL199169] [TUFTCV3 14.400] [3] [1] [ANGL156661] [DARL G1 22.000] [1]
CHNL#'S 17:4 [ANGL199086] [TRENTON613.800] [6] [1] [ANGL156661] [DARL G1 22.000] [1]
CHNL#'S 16:4 [ANGL199085] [TRENTN5 13.800] [5] [1] [ANGL156661] [DARL G1 22.000] [1]
CHNL#'S 15:4 [ANGL199061] [TMP1 STO13.800] [1] [1] [ANGL156661] [DARL G1 22.000] [1]
CHNL#'S 13:4 [ANGL199043] [ACONIG1 20.000] [1] [1] [ANGL156661] [DARL G1 22.000] [1]
CHNL#'S 11:4 [ANGL199001] [LINGAN1 14.400] [1] [1] [ANGL156661] [DARL G1 22.000] [1]
100.00
-100.0
SAT, JAN 31 2009 15:41
TIME (SECONDS)
NS ANGLE

2013 WINTER PEAK WITH DSM - DELIVER RESERVE
NS-NB=200; NB-NE=500; CBX=790; ONI=1015 ONS=704
3 PHASE FAULT ON L6014 AT KEMPT RD PRIMARY FAILED
TUFTS COVE UNITS TRIP
FILE: a117.1F-I6014_104H_3ph_recl-2013WP-DSM-NS-200.out
CHNL#'S 10:4 [ANGL190472] [BLLDNG2 19.000] [1] [1] [ANGL156661] [DARL G1 22.000] [1]
CHNL#'S 6:4 [ANGL190456] [LEPRG1 26.000] [1] [1] [ANGL156661] [DARL G1 22.000] [1]
CHNL#'S 5:4 [ANGL190450] [MACTG1 13.800] [1] [1] [ANGL156661] [DARL G1 22.000] [1]
CHNL#'S 3:4 [ANGL126652] [RAV 3 22.000] [1] [1] [ANGL156661] [DARL G1 22.000] [1]
CHNL#'S 2:4 [ANGL101063] [MYST G7 22.000] [1] [1] [ANGL156661] [DARL G1 22.000] [1]
CHNL#'S 1:4 [ANGL100060] [MIS GT1 18.000] [1] [1] [ANGL156661] [DARL G1 22.000] [1]
100.00
-100.0
SAT, JAN 31 2009 15:41
TIME (SECONDS)
"NE,NY,NB ANGLE"

2013 WINTER PEAK WITH DSM - DELIVER RESERVE
NS-NB=200; NB-NE=500; CBX=790; ONI=1015 ONS=704
3 PHASE FAULT ON L6014 AT KEMPT RD PRIMARY FAILED
TUFTS COVE UNITS TRIP
FILE: a117.1F-I6014_104H_3ph_recl-2013WP-DSM-NS-200.out
CHNL# 59: [POWR199169] [TUFTCV3 14.400] [3] [1]
CHNL# 56: [POWR199086] [TRENTON613.800] [6] [1]
CHNL# 55: [POWR199085] [TRENTN5 13.800] [5] [1]
CHNL# 54: [POWR199061] [TMP1 STO13.800] [1] [1]
CHNL# 52: [POWR199043] [ACONIG1 20.000] [1] [1]
CHNL# 50: [POWR199001] [LINGAN1 14.400] [1] [1]
2.5000
-1.500
0.0
SAT, JAN 31 2009 15:41
TIME (SECONDS)
NS MW

2013 WINTER PEAK WITH DSM - DELIVER RESERVE
NS-NB=200; NB-NE=500; CBX=790; ONI=1015 ONS=704
3 PHASE FAULT ON L6014 AT KEMPT RD PRIMARY FAILED
TUFTS COVE UNITS TRIP
FILE: a117.1F-I6014_104H_3ph_recl-2013WP-DSM-NS-200.out
CHNL# 49: [POWR190472] [BLLDNG2 19.000] [1]
CHNL# 45: [POWR190456] [LEPRG1 26.000] [1]
CHNL# 44: [POWR190450] [MACTG1 13.800] [1]
CHNL# 42: [POWR126652] [RAV 3 22.000] [1]
CHNL# 41: [POWR101063] [MYST G7 22.000] [1]
CHNL# 40: [POWR100060] [MIS GT1 18.000] [1]
5.0000
4.0000
0.0
1.0000
2.0000
SAT, JAN 31 2009 15:41
TIME (SECONDS)
"NE,NY,NB POWER"

2013 WINTER PEAK WITH DSM - DELIVER RESERVE
NS-NB=200; NB-NE=500; CBX=790; ONI=1015 ONS=704
3 PHASE FAULT ON L6014 AT KEMPT RD PRIMARY FAILED
TUFTS COVE UNITS TRIP
FILE: a117.1F-I6014_104H_3ph_recl-2013WP-DSM-NS-200.out
CHNL# 119: [VARS IR141-DIGBY] 0.50000 -0.5000
CHNL# 118: [VARS IR137-STATIA] 0.50000 -0.5000
CHNL# 117: [VARS IR114-GLENDHU] 0.50000 -0.5000
CHNL# 116: [VARS IR84-DALHOUSIE] 0.50000 -0.5000
CHNL# 115: [VARS IR82_NUTTBY] 0.50000 -0.5000
CHNL# 114: [VARS IR45_AMHERST] 0.50000 -0.5000
0.0 1.0000 2.0000 3.0000 4.0000 5.0000 6.0000 7.0000 8.0000 9.0000 10.000
TIME (SECONDS)
SAT, JAN 31 2009 15:41
NS WIND MV

2013 WINTER PEAK WITH DSM - DELIVER RESERVE
NS-NB=200; NB-NE=500; CBX=790; ONI=1015 ONS=704
3 PHASE FAULT ON L6014 AT KEMPT RD PRIMARY FAILED
TUFTS COVE UNITS TRIP
FILE: a117.1F-I6014_104H_3ph_recl-2013WP-DSM-NS-200.out
CHNL# 79: [POWER IR141-DIGBY] 1.0000 0.0
CHNL# 78: [POWER IR137-STATIA] 1.0000 0.0
CHNL# 77: [POWER IR114-GLENDHU] 1.0000 0.0
CHNL# 76: [POWER IR84-DALHOUSIE] 1.0000 0.0
CHNL# 75: [POWER IR82_NUTTBY] 1.0000 0.0
CHNL# 74: [POWER IR45_AMHERST] 1.0000 0.0
0.0 1.0000 2.0000 3.0000 4.0000 5.0000 6.0000 7.0000 8.0000 9.0000 10.000
TIME (SECONDS)
SAT, JAN 31 2009 15:41
NS WIND MW

2013 WINTER PEAK WITH DSM - DELIVER RESERVE
NS-NB=200; NB-NE=500; CBX=790; ONI=1015 ONS=704
3 PHASE FAULT ON L6014 AT KEMPT RD PRIMARY FAILED
TUFTS COVE UNITS TRIP
FILE: a117.1F-I6014_104H_3ph_recl-2013WP-DSM-NS-200.out
CHNL# 133: [VOLT199125 [ONSLOW 345.00]] 1.1000 0.90000
CHNL# 132: [VOLT199120 [HOPEWELL345.00]] 1.1000 0.90000
CHNL# 131: [VOLT199045 [WOODBINE345.00]] 1.1000 0.90000
CHNL# 130: [VOLT190320 [SALBRY 345.00]] 1.1000 0.90000
CHNL# 128: [VOLT190004 [KESWICK 345.00]] 1.1000 0.90000
CHNL# 127: [VOLT 70002 [ORRINGTN345.00]] 1.1000 0.90000
0.0 1.0000 2.0000 3.0000 4.0000 5.0000 6.0000 7.0000 8.0000 9.0000 10.000
TIME (SECONDS)
SAT, JAN 31 2009 15:41
"345KV VOLTAGE"

2013 WINTER PEAK WITH DSM - DELIVER RESERVE
NS-NB=200; NB-NE=500; CBX=790; ONI=1015 ONS=704
3 PHASE FAULT ON L6014 AT KEMPT RD PRIMARY FAILED
TUFTS COVE UNITS TRIP
FILE: a117.1F-I6014_104H_3ph_recl-2013WP-DSM-NS-200.out
CHNL# 125: 60*(1+[FREQ199125 [ONSLOW 345.00]]) 60.500 59.500
CHNL# 124: 60*(1+[FREQ199120 [HOPEWELL345.00]]) 60.500 59.500
CHNL# 123: 60*(1+[FREQ199045 [WOODBINE345.00]]) 60.500 59.500
CHNL# 122: 60*(1+[FREQ190320 [SALBRY 345.00]]) 60.500 59.500
CHNL# 121: 60*(1+[FREQ190197 [C.COVE 345.00]]) 60.500 59.500
CHNL# 120: 60*(1+[FREQ 70002 [ORRINGTN345.00]]) 60.500 59.500
0.0 1.0000 2.0000 3.0000 4.0000 5.0000 6.0000 7.0000 8.0000 9.0000 10.000
TIME (SECONDS)
SAT, JAN 31 2009 15:41
FREQUENCY HZ

2013 WINTER PEAK WITH DSM - DELIVER RESERVE
NS-NB=200; NB-NE=500; CBX=790; ONI=1015 ONS=704
3 PHASE FAULT ON L6014 AT KEMPT RD PRIMARY FAILED
TUFTS COVE UNITS TRIP
FILE: a117.1F-I6014_104H_3ph_recl-2013WP-DSM-NS-200.out
CHNL# 146: [VOLT199280 ITUSKET A138.00]
CHNL# 145: [VOLT199193 [HHWAS 138.00]
CHNL# 144: [VOLT199165 [TUFTSCOVE138.00]
CHNL# 143: [VOLT199138: [SPRNGHILL138.00]
CHNL# 142: [VOLT199090 [SON-TREN138.00]
CHNL# 141: [VOLT199051 [HASTINGS138.00]
TIME (SECONDS)
SAT, JAN 31 2009 15:41
138KV BUS VOLTS

2013 WINTER PEAK WITH DSM - DELIVER RESERVE
NS-NB=200; NB-NE=500; CBX=790; ONI=1015 ONS=704
3 PHASE FAULT ON L6014 AT KEMPT RD PRIMARY FAILED
TUFTS COVE UNITS TRIP
FILE: a117.1F-I6014_104H_3ph_recl-2013WP-DSM-NS-200.out
CHNL# 140: [VOLT199240 [BWATER A230.00]
CHNL# 139: [VOLT199200 [BRUSHY 230.00]
CHNL# 138: [VOLT199130 [ONSLOW 230.00]
CHNL# 137: [VOLT199050 [HASTINGS230.00]
CHNL# 136: [VOLT199044 [PT.ACONI230.00]
CHNL# 135: [VOLT199000 [LINGAN 230.00]
TIME (SECONDS)
SAT, JAN 31 2009 15:41
230KV BUS VOLTS

2013 WINTER PEAK WITH DSM - DELIVER RESERVE
NS-NB=200; NB-NE=500; CBX=790; ONI=1015 ONS=704
3 PHASE FAULT ON L6014 AT KEMPT RD PRIMARY FAILED
TUFTS COVE UNITS TRIP
FILE: a117.1F-I6014_104H_3ph_recl-2013WP-DSM-NS-200.out
CHNL# 217: [L6533MW]
CHNL# 215: [L6503MW]
CHNL# 197: [L8003MW]
CHNL# 195: [L8004MW]
CHNL# 193: [L8001MW]
CHNL# 221: [L3001MW]
TIME (SECONDS)
SAT, JAN 31 2009 15:41
LINE FLOW MW

2013 WINTER PEAK WITH DSM - DELIVER RESERVE
NS-NB=200; NB-NE=500; CBX=790; ONI=1015 ONS=704
3 PHASE FAULT ON L6014 AT KEMPT RD PRIMARY FAILED
TUFTS COVE UNITS TRIP
FILE: a117.1F-I6014_104H_3ph_recl-2013WP-DSM-NS-200.out
CHNL# 154: [IR141-DIGBYH69.0 VOLTS]
CHNL# 153: [IR137-STATIG25.0 VOLTS]
CHNL# 152: [IR114-GLENDH138.0 VOLTS]
CHNL# 151: [IR84-DALHOHV230.0 VOLTS]
CHNL# 150: [IR82_NUTBHV69.0 VOLTS]
CHNL# 149: [IR45_AMHERTP138.0 VOLTS]
TIME (SECONDS)
SAT, JAN 31 2009 15:41
WIND BUS VOLTS

2013 WINTER PEAK WITH DSM - DELIVER RESERVE
NS-NB=200; NB-NE=500; CBX=790; ONI=1015 ONS=704
3 PHASE FAULT ON L6035 AT WATER ST
CLEARED IN 6 CYCLES
FILE: a118-l6035_1H_3ph_nrecl-2013WP-DSM-NS-200.out
CHNL#S 20,4: [ANGL199169 [TUFTCV3 14.400] [3]] [ANGL156661 [DARL G1 22.000] [1_
100.00
-100.0
CHNL#S 17,4: [ANGL199086 [TRENTON613.800] [6]] [ANGL156661 [DARL G1 22.000] [1
CHNL#S 16,4: [ANGL199085 [TRENTN5 13.800] [5]] [ANGL156661 [DARL G1 22.000] [1
CHNL#S 15,4: [ANGL199061 [TMP1 STO13.800] [1]] [ANGL156661 [DARL G1 22.000] [1
CHNL#S 13,4: [ANGL199043 [ACONIG1 20.000] [1]] [ANGL156661 [DARL G1 22.000] [1
CHNL#S 11,4: [ANGL199001 [LINGAN1 14.400] [1]] [ANGL156661 [DARL G1 22.000] [1
0.0
1.0000
2.0000
3.0000
4.0000
5.0000
6.0000
7.0000
8.0000
9.0000
10.000
TIME (SECONDS)
SAT, JAN 31 2009 15:41
NS ANGLE

2013 WINTER PEAK WITH DSM - DELIVER RESERVE
NS-NB=200; NB-NE=500; CBX=790; ONI=1015 ONS=704
3 PHASE FAULT ON L6035 AT WATER ST
CLEARED IN 6 CYCLES
FILE: a118-l6035_1H_3ph_nrecl-2013WP-DSM-NS-200.out
CHNL#S 10,4: [ANGL190472 [BLLDNG2 19.000] [1]] [ANGL156661 [DARL G1 22.000] [1
CHNL#S 6,4: [ANGL190456 [LEPRG1 26.000] [1]] [ANGL156661 [DARL G1 22.000] [1
CHNL#S 5,4: [ANGL190450 [MACTG1 13.800] [1]] [ANGL156661 [DARL G1 22.000] [1
CHNL#S 3,4: [ANGL126652 [RAV 3 22.000] [1]] [ANGL156661 [DARL G1 22.000] [1
CHNL#S 2,4: [ANGL101063 [MYST G7 22.000] [1]] [ANGL156661 [DARL G1 22.000] [1
CHNL#S 1,4: [ANGL100060 [MIS GT1 18.000] [1]] [ANGL156661 [DARL G1 22.000] [1
100.00
-100.0
0.0
1.0000
2.0000
3.0000
4.0000
5.0000
6.0000
7.0000
8.0000
9.0000
10.000
TIME (SECONDS)
SAT, JAN 31 2009 15:41
"NE,NY,NB ANGLE"

2013 WINTER PEAK WITH DSM - DELIVER RESERVE
NS-NB=200; NB-NE=500; CBX=790; ONI=1015 ONS=704
3 PHASE FAULT ON L6035 AT WATER ST
CLEARED IN 6 CYCLES
FILE: a118-l6035_1H_3ph_nrecl-2013WP-DSM-NS-200.out
CHNL# 59: [POWR199169 [TUFTCV3 14.400] [3]]
CHNL# 56: [POWR199086 [TRENTON613.800] [6]]
CHNL# 55: [POWR199085 [TRENTN5 13.800] [5]]
CHNL# 54: [POWR199061 [TMP1 STO13.800] [1]]
CHNL# 52: [POWR199043 [ACONIG1 20.000] [1]]
CHNL# 50: [POWR199001 [LINGAN1 14.400] [1]]
2.5000
0.0
1.0000
-1.500
2.0000
3.0000
4.0000
5.0000
6.0000
7.0000
8.0000
9.0000
10.000
TIME (SECONDS)
SAT, JAN 31 2009 15:41
NS MW

2013 WINTER PEAK WITH DSM - DELIVER RESERVE
NS-NB=200; NB-NE=500; CBX=790; ONI=1015 ONS=704
3 PHASE FAULT ON L6035 AT WATER ST
CLEARED IN 6 CYCLES
FILE: a118-l6035_1H_3ph_nrecl-2013WP-DSM-NS-200.out
CHNL# 49: [POWER190472 [BLLDNG2 19.000] [1]]
CHNL# 45: [POWER190456 [LEPRG1 26.000] [1]]
CHNL# 44: [POWER190450 [MACTG1 13.800] [1]]
CHNL# 42: [POWER126652 [RAV 3 22.000] [1]]
CHNL# 41: [POWER101063 [MYST G7 22.000] [1]]
CHNL# 40: [POWER100060 [MIS GT1 18.000] [1]]
5.0000
0.0
9.0000
4.0000
6.5000
1.0000
7.0000
2.0000
1.0000
2.0000
3.0000
4.0000
5.0000
6.0000
7.0000
8.0000
9.0000
10.000
TIME (SECONDS)
SAT, JAN 31 2009 15:41
"NE,NY,NB POWER"

2013 WINTER PEAK WITH DSM - DELIVER RESERVE
NS-NB=200; NB-NE=500; CBX=790; ONI=1015 ONS=704
3 PHASE FAULT ON L6035 AT WATER ST
CLEARED IN 6 CYCLES
FILE: a118-l6035_1H_3ph_nrecl-2013WP-DSM-NS-200.out
CHNL# 119: [VARS IR141-DIGBY]
CHNL# 118: [VARS IR137-STATIA]
CHNL# 117: [VARS IR114-GLENDHU]
CHNL# 116: [VARS IR84-DALHOUSIE]
CHNL# 115: [VARS IR82_NUTTBY]
CHNL# 114: [VARS IR45_AMHERST]
TIME (SECONDS)
SAT, JAN 31 2009 15:41
NS WIND MV

2013 WINTER PEAK WITH DSM - DELIVER RESERVE
NS-NB=200; NB-NE=500; CBX=790; ONI=1015 ONS=704
3 PHASE FAULT ON L6035 AT WATER ST
CLEARED IN 6 CYCLES
FILE: a118-l6035_1H_3ph_nrecl-2013WP-DSM-NS-200.out
CHNL# 79: [POWER IR141-DIGBY]
CHNL# 78: [POWER IR137-STATIA]
CHNL# 77: [POWER IR114-GLENDHU]
CHNL# 76: [POWER IR84-DALHOUSIE]
CHNL# 75: [POWER IR82_NUTTBY]
CHNL# 74: [POWER IR45_AMHERST]
TIME (SECONDS)
SAT, JAN 31 2009 15:41
NS WIND MW

2013 WINTER PEAK WITH DSM - DELIVER RESERVE
NS-NB=200; NB-NE=500; CBX=790; ONI=1015 ONS=704
3 PHASE FAULT ON L6035 AT WATER ST
CLEARED IN 6 CYCLES
FILE: a118-l6035_1H_3ph_nrecl-2013WP-DSM-NS-200.out
CHNL# 133: [VOLT199125 [ONSLOW 345.00]]
CHNL# 132: [VOLT199120 [HOPEWELL 345.00]]
CHNL# 131: [VOLT199045 [WOODBINE345.00]]
CHNL# 130: [VOLT190320 [SALBRY 345.00]]
CHNL# 128: [VOLT190004 [KESWICK 345.00]]
CHNL# 127: [VOLT 70002 [ORRINGTN345.00]]
TIME (SECONDS)
SAT, JAN 31 2009 15:41
"345KV VOLTAGE"

2013 WINTER PEAK WITH DSM - DELIVER RESERVE
NS-NB=200; NB-NE=500; CBX=790; ONI=1015 ONS=704
3 PHASE FAULT ON L6035 AT WATER ST
CLEARED IN 6 CYCLES
FILE: a118-l6035_1H_3ph_nrecl-2013WP-DSM-NS-200.out
CHNL# 125: 60*(1+[FREQ199125 [ONSLOW 345.00]])
CHNL# 124: 60*(1+[FREQ199120 [HOPEWELL 345.00]])
CHNL# 123: 60*(1+[FREQ199045 [WOODBINE345.00]])
CHNL# 122: 60*(1+[FREQ190320 [SALBRY 345.00]])
CHNL# 121: 60*(1+[FREQ190197 [C.COVE 345.00]])
CHNL# 120: 60*(1+[FREQ 70002 [ORRINGTN345.00]])
TIME (SECONDS)
SAT, JAN 31 2009 15:41
FREQUENCY HZ

2013 WINTER PEAK WITH DSM - DELIVER RESERVE
NS-NB=200; NB-NE=500; CBX=790; ONI=1015 ONS=704
3 PHASE FAULT ON L6035 AT WATER ST
CLEARED IN 6 CYCLES
FILE: a118-l6035_1H_3ph_nrecl-2013WP-DSM-NS-200.out
CHNL# 146: [VOLT199280 [TUSKET A138.00]]
CHNL# 145: [VOLT199193 [HHWAS 138.00]]
CHNL# 144: [VOLT199165 [TUFTCOVE138.00]]
CHNL# 143: [VOLT199135 [SPRNGHILL138.00]]
CHNL# 142: [VOLT199090 [SON-TREN138.00]]
CHNL# 141: [VOLT199051 [HASTINGS138.00]]
1.2000
0.70000
0.0
1.0000
2.0000
3.0000
4.0000
5.0000
6.0000
7.0000
8.0000
9.0000
10.000
TIME (SECONDS)
SAT, JAN 31 2009 15:41
138KV BUS VOLTS

2013 WINTER PEAK WITH DSM - DELIVER RESERVE
NS-NB=200; NB-NE=500; CBX=790; ONI=1015 ONS=704
3 PHASE FAULT ON L6035 AT WATER ST
CLEARED IN 6 CYCLES
FILE: a118-l6035_1H_3ph_nrecl-2013WP-DSM-NS-200.out
CHNL# 140: [VOLT199240 [BWATER A230.00]]
CHNL# 139: [VOLT199200 [BRUSHY 230.00]]
CHNL# 138: [VOLT199130 [ONSLOW 230.00]]
CHNL# 137: [VOLT199050 [HASTINGS230.00]]
CHNL# 136: [VOLT199044 [PT.ACONI230.00]]
CHNL# 135: [VOLT199000 [LINGAN 230.00]]
1.2000
0.70000
0.0
1.0000
2.0000
3.0000
4.0000
5.0000
6.0000
7.0000
8.0000
9.0000
10.000
TIME (SECONDS)
SAT, JAN 31 2009 15:41
230KV BUS VOLTS

2013 WINTER PEAK WITH DSM - DELIVER RESERVE
NS-NB=200; NB-NE=500; CBX=790; ONI=1015 ONS=704
3 PHASE FAULT ON L6035 AT WATER ST
CLEARED IN 6 CYCLES
FILE: a118-l6035_1H_3ph_nrecl-2013WP-DSM-NS-200.out
CHNL# 217: [L6533MW]
CHNL# 215: [L6503MW]
CHNL# 197: [L8003MW]
CHNL# 195: [L8004MW]
CHNL# 193: [L8001MW]
CHNL# 221: [L3001MW]
250.00
-250.0
500.00
0.0
1000.0
-1000.
0.0
1.0000
2.0000
3.0000
4.0000
5.0000
6.0000
7.0000
8.0000
9.0000
10.000
TIME (SECONDS)
SAT, JAN 31 2009 15:41
LINE FLOW MW

2013 WINTER PEAK WITH DSM - DELIVER RESERVE
NS-NB=200; NB-NE=500; CBX=790; ONI=1015 ONS=704
3 PHASE FAULT ON L6035 AT WATER ST
CLEARED IN 6 CYCLES
FILE: a118-l6035_1H_3ph_nrecl-2013WP-DSM-NS-200.out
CHNL# 154: [IR141-DIGBYH69.0 VOLTS]
CHNL# 153: [IR137-STATIG25.0 VOLTS]
CHNL# 152: [IR114-GLENDH138.0 VOLTS]
CHNL# 151: [IR84-DALHOHV230.0 VOLTS]
CHNL# 150: [IR82_NUTBHV69.0 VOLTS]
CHNL# 149: [IR45_AMHERTP138.0 VOLTS]
1.2000
0.70000
0.0
1.0000
2.0000
3.0000
4.0000
5.0000
6.0000
7.0000
8.0000
9.0000
10.000
TIME (SECONDS)
SAT, JAN 31 2009 15:41
WIND BUS VOLTS

2013 WINTER PEAK WITH DSM - DELIVER RESERVE
NS-NB=200; NB-NE=500; CBX=790; ONI=1015 ONS=704
3 PHASE FAULT ON L6035 AT WATER ST PRIMARY FAILED
CLEARED IN 6 CYCLES FROM 1H, 25 CYCLES FROM KEMPTRD
FILE: a118F-I6035_1H_3ph_mecl-2013WP-DSM-NS-200.out
CHNL# 20: [ANGL199169 [TUFTCV3 14.400] [3]] [ANGL156661 [DARL G1 22.000] [1]
CHNL# 17: [ANGL199086 [TRENTON613.800] [6]] [ANGL156661 [DARL G1 22.000] [1]
CHNL# 16: [ANGL199085 [TRENTN5 13.800] [5]] [ANGL156661 [DARL G1 22.000] [1]
CHNL# 15: [ANGL199061 [TMP1 STO13.800] [1]] [ANGL156661 [DARL G1 22.000] [1]
CHNL# 13: [ANGL199043 [ACONIG1 20.000] [1]] [ANGL156661 [DARL G1 22.000] [1]
CHNL# 11: [ANGL199001 [LINGAN1 14.400] [1]] [ANGL156661 [DARL G1 22.000] [1]
100.00
-100.0
0.0
1.0000
2.0000
3.0000
4.0000
5.0000
6.0000
7.0000
8.0000
9.0000
10.000
TIME (SECONDS)
SAT, JAN 31 2009 15:41
NS ANGLE

2013 WINTER PEAK WITH DSM - DELIVER RESERVE
NS-NB=200; NB-NE=500; CBX=790; ONI=1015 ONS=704
3 PHASE FAULT ON L6035 AT WATER ST PRIMARY FAILED
CLEARED IN 6 CYCLES FROM 1H, 25 CYCLES FROM KEMPTRD
FILE: a118F-I6035_1H_3ph_mecl-2013WP-DSM-NS-200.out
CHNL# 10: [ANGL190472 [BLLDNG2 19.000] [1]] [ANGL156661 [DARL G1 22.000] [1]
CHNL# 6: [ANGL190456 [LEPRG1 26.000] [1]] [ANGL156661 [DARL G1 22.000] [1]
CHNL# 5: [ANGL190450 [MACTG1 13.800] [1]] [ANGL156661 [DARL G1 22.000] [1]
CHNL# 3: [ANGL126652 [RAV 3 22.000] [1]] [ANGL156661 [DARL G1 22.000] [1]
CHNL# 2: [ANGL101063 [MYST G7 22.000] [1]] [ANGL156661 [DARL G1 22.000] [1]
CHNL# 1: [ANGL100060 [MIS GT1 18.000] [1]] [ANGL156661 [DARL G1 22.000] [1]
100.00
-100.0
0.0
1.0000
2.0000
3.0000
4.0000
5.0000
6.0000
7.0000
8.0000
9.0000
10.000
TIME (SECONDS)
SAT, JAN 31 2009 15:41
"NE,NY,NB ANGLE"

2013 WINTER PEAK WITH DSM - DELIVER RESERVE
NS-NB=200; NB-NE=500; CBX=790; ONI=1015 ONS=704
3 PHASE FAULT ON L6035 AT WATER ST PRIMARY FAILED
CLEARED IN 6 CYCLES FROM 1H, 25 CYCLES FROM KEMPTRD
FILE: a118F-I6035_1H_3ph_mecl-2013WP-DSM-NS-200.out
CHNL# 59: [POWR199169 [TUFTCV3 14.400] [3]]
CHNL# 56: [POWR199086 [TRENTON613.800] [6]]
CHNL# 55: [POWR199085 [TRENTN5 13.800] [5]]
CHNL# 54: [POWR199061 [TMP1 STO13.800] [1]]
CHNL# 52: [POWR199043 [ACONIG1 20.000] [1]]
CHNL# 50: [POWR199001 [LINGAN1 14.400] [1]]
2.5000
1.0000
-1.500
0.0
1.0000
2.0000
3.0000
4.0000
5.0000
6.0000
7.0000
8.0000
9.0000
10.000
TIME (SECONDS)
SAT, JAN 31 2009 15:41
NS MW

2013 WINTER PEAK WITH DSM - DELIVER RESERVE
NS-NB=200; NB-NE=500; CBX=790; ONI=1015 ONS=704
3 PHASE FAULT ON L6035 AT WATER ST PRIMARY FAILED
CLEARED IN 6 CYCLES FROM 1H, 25 CYCLES FROM KEMPTRD
FILE: a118F-I6035_1H_3ph_mecl-2013WP-DSM-NS-200.out
CHNL# 49: [POWER190472 [BLLDNG2 19.000] [1]]
CHNL# 45: [POWER190456 [LEPRG1 26.000] [1]]
CHNL# 44: [POWER190450 [MACTG1 13.800] [1]]
CHNL# 42: [POWER126652 [RAV 3 22.000] [1]]
CHNL# 41: [POWER101063 [MYST G7 22.000] [1]]
CHNL# 40: [POWER100060 [MIS GT1 18.000] [1]]
5.0000
9.0000
4.0000
0.0
1.0000
2.0000
3.0000
4.0000
5.0000
6.0000
7.0000
8.0000
9.0000
10.000
TIME (SECONDS)
SAT, JAN 31 2009 15:41
"NE,NY,NB POWER"

2013 WINTER PEAK WITH DSM - DELIVER RESERVE
NS-NB=200; NB-NE=500; CBX=790; ONI=1015 ONS=704
3 PHASE FAULT ON L6035 AT WATER ST PRIMARY FAILED
CLEARED IN 6 CYCLES FROM 1H, 25 CYCLES FROM KEMPTRD
FILE: a118F-I6035_1H_3ph_nrecl-2013WP-DSM-NS-200.out
CHNL# 119: [VARS IR141-DIGBY]
CHNL# 118: [VARS IR137-STATIA]
CHNL# 117: [VARS IR114-GLENDHU]
CHNL# 116: [VARS IR84-DALHOUSIE]
CHNL# 115: [VARS IR82_NUTTBY]
CHNL# 114: [VARS IR45_AMHERST]
TIME (SECONDS)
SAT, JAN 31 2009 15:41
NS WIND MV

2013 WINTER PEAK WITH DSM - DELIVER RESERVE
NS-NB=200; NB-NE=500; CBX=790; ONI=1015 ONS=704
3 PHASE FAULT ON L6035 AT WATER ST PRIMARY FAILED
CLEARED IN 6 CYCLES FROM 1H, 25 CYCLES FROM KEMPTRD
FILE: a118F-I6035_1H_3ph_nrecl-2013WP-DSM-NS-200.out
CHNL# 79: [POWER IR141-DIGBY]
CHNL# 78: [POWER IR137-STATIA]
CHNL# 77: [POWER IR114-GLENDHU]
CHNL# 76: [POWER IR84-DALHOUSIE]
CHNL# 75: [POWER IR82_NUTTBY]
CHNL# 74: [POWER IR45_AMHERST]
TIME (SECONDS)
SAT, JAN 31 2009 15:41
NS WIND MW

2013 WINTER PEAK WITH DSM - DELIVER RESERVE
NS-NB=200; NB-NE=500; CBX=790; ONI=1015 ONS=704
3 PHASE FAULT ON L6035 AT WATER ST PRIMARY FAILED
CLEARED IN 6 CYCLES FROM 1H, 25 CYCLES FROM KEMPTRD
FILE: a118F-I6035_1H_3ph_nrecl-2013WP-DSM-NS-200.out
CHNL# 133: [VOLT199125 [ONSLOW 345.00]]
CHNL# 132: [VOLT199120 [HOPEWELL 345.00]]
CHNL# 131: [VOLT199045 [WOODBINE345.00]]
CHNL# 130: [VOLT190320 [SALBRY 345.00]]
CHNL# 128: [VOLT190004 [KESWICK 345.00]]
CHNL# 127: [VOLT 70002 [ORRINGTN345.00]]
TIME (SECONDS)
SAT, JAN 31 2009 15:41
"345KV VOLTAGE"

2013 WINTER PEAK WITH DSM - DELIVER RESERVE
NS-NB=200; NB-NE=500; CBX=790; ONI=1015 ONS=704
3 PHASE FAULT ON L6035 AT WATER ST PRIMARY FAILED
CLEARED IN 6 CYCLES FROM 1H, 25 CYCLES FROM KEMPTRD
FILE: a118F-I6035_1H_3ph_nrecl-2013WP-DSM-NS-200.out
CHNL# 125: 60*(1+[FREQ199125 [ONSLOW 345.00]])
CHNL# 124: 60*(1+[FREQ199120 [HOPEWELL 345.00]])
CHNL# 123: 60*(1+[FREQ199045 [WOODBINE345.00]])
CHNL# 122: 60*(1+[FREQ190320 [SALBRY 345.00]])
CHNL# 121: 60*(1+[FREQ190197 [C.COVE 345.00]])
CHNL# 120: 60*(1+[FREQ 70002 [ORRINGTN345.00]])
TIME (SECONDS)
SAT, JAN 31 2009 15:41
FREQUENCY HZ

2013 WINTER PEAK WITH DSM - DELIVER RESERVE
NS-NB=200; NB-NE=500; CBX=790; ONI=1015 ONS=704
3 PHASE FAULT ON L6035 AT WATER ST PRIMARY FAILED
CLEARED IN 6 CYCLES FROM 1H, 25 CYCLES FROM KEMPTRD
FILE: a118F-I6035_1H_3ph_mecl-2013WP-DSM-NS-200.out
CHNL# 146: [VOLT199280 [TUSKET A138.00]]
CHNL# 145: [VOLT199193 [1H-WAS 138.00]]
CHNL# 144: [VOLT199165 [TUFTCOVE138.00]]
CHNL# 143: [VOLT199138 [SPRNGHIL138.00]]
CHNL# 142: [VOLT199090 [50N-TREN138.00]]
CHNL# 141: [VOLT199051 [HASTINGS138.00]]
1.2000
0.70000
0.0
1.0000
2.0000
3.0000
4.0000
5.0000
6.0000
7.0000
8.0000
9.0000
10.000
TIME (SECONDS)
SAT, JAN 31 2009 15:41
138KV BUS VOLTS

2013 WINTER PEAK WITH DSM - DELIVER RESERVE
NS-NB=200; NB-NE=500; CBX=790; ONI=1015 ONS=704
3 PHASE FAULT ON L6035 AT WATER ST PRIMARY FAILED
CLEARED IN 6 CYCLES FROM 1H, 25 CYCLES FROM KEMPTRD
FILE: a118F-I6035_1H_3ph_mecl-2013WP-DSM-NS-200.out
CHNL# 140: [VOLT199240 [BWATER A230.00]]
CHNL# 139: [VOLT199200 [BRUSHY 230.00]]
CHNL# 138: [VOLT199130 [ONSLOW 230.00]]
CHNL# 137: [VOLT199050 [HASTINGS230.00]]
CHNL# 136: [VOLT199044 [PT.ACONI230.00]]
CHNL# 135: [VOLT199000 [LINGAN 230.00]]
1.2000
0.70000
0.0
1.0000
2.0000
3.0000
4.0000
5.0000
6.0000
7.0000
8.0000
9.0000
10.000
TIME (SECONDS)
SAT, JAN 31 2009 15:41
230KV BUS VOLTS

2013 WINTER PEAK WITH DSM - DELIVER RESERVE
NS-NB=200; NB-NE=500; CBX=790; ONI=1015 ONS=704
3 PHASE FAULT ON L6035 AT WATER ST PRIMARY FAILED
CLEARED IN 6 CYCLES FROM 1H, 25 CYCLES FROM KEMPTRD
FILE: a118F-I6035_1H_3ph_mecl-2013WP-DSM-NS-200.out
CHNL# 217: [L6533MW]
CHNL# 215: [L6503MW]
CHNL# 197: [L8003MW]
CHNL# 195: [L8004MW]
CHNL# 193: [L8001MW]
CHNL# 221: [L3001MW]
250.00
500.00
1000.0
0.0
-250.0
-1000.
0.0
1.0000
2.0000
3.0000
4.0000
5.0000
6.0000
7.0000
8.0000
9.0000
10.000
TIME (SECONDS)
SAT, JAN 31 2009 15:41
LINE FLOW MW

2013 WINTER PEAK WITH DSM - DELIVER RESERVE
NS-NB=200; NB-NE=500; CBX=790; ONI=1015 ONS=704
3 PHASE FAULT ON L6035 AT WATER ST PRIMARY FAILED
CLEARED IN 6 CYCLES FROM 1H, 25 CYCLES FROM KEMPTRD
FILE: a118F-I6035_1H_3ph_mecl-2013WP-DSM-NS-200.out
CHNL# 154: [IR141-DIGBYH69.0 VOLTS]
CHNL# 153: [IR137-STATIG25.0 VOLTS]
CHNL# 152: [IR114-GLENDH138.0 VOLTS]
CHNL# 151: [IR84-DALHOHV230.0 VOLTS]
CHNL# 150: [IR82_NUTBHV69.0 VOLTS]
CHNL# 149: [IR45_AMHERTP138.0 VOLTS]
1.2000
0.70000
0.0
1.0000
2.0000
3.0000
4.0000
5.0000
6.0000
7.0000
8.0000
9.0000
10.000
TIME (SECONDS)
SAT, JAN 31 2009 15:41
WIND BUS VOLTS

2013 WINTER PEAK WITH DSM - DELIVER RESERVE
NS-NB=200; NB-NE=500; CBX=790; ONI=1015 ONS=704
3 PHASE FAULT ON L6007 AT BURNSIDE
CLEARED IN 6 CYCLES FROM BURNSIDE
FILE: a119-l6007_108H_3ph_recl-2013WP-DSM-NS-200.out
CHNL# 20: [ANGL199169 [TUFTCV3 14.400] [3]] [ANGL156661 [DARL G1 22.000] [1]]
CHNL# 17: [ANGL199086 [TRENTON613.800] [6]] [ANGL156661 [DARL G1 22.000] [1]]
CHNL# 16: [ANGL199085 [TRENTN5 13.800] [5]] [ANGL156661 [DARL G1 22.000] [1]]
CHNL# 15: [ANGL199061 [TMP1 STO13.800] [1]] [ANGL156661 [DARL G1 22.000] [1]]
CHNL# 13: [ANGL199043 [ACONIG1 20.000] [1]] [ANGL156661 [DARL G1 22.000] [1]]
CHNL# 11: [ANGL199001 [LINGAN1 14.400] [1]] [ANGL156661 [DARL G1 22.000] [1]]
100.00
-100.0
0.0
1.0000
2.0000
3.0000
4.0000
5.0000
6.0000
7.0000
8.0000
9.0000
10.000
TIME (SECONDS)
SAT, JAN 31 2009 15:42
NS ANGLE

2013 WINTER PEAK WITH DSM - DELIVER RESERVE
NS-NB=200; NB-NE=500; CBX=790; ONI=1015 ONS=704
3 PHASE FAULT ON L6007 AT BURNSIDE
CLEARED IN 6 CYCLES FROM BURNSIDE
FILE: a119-l6007_108H_3ph_recl-2013WP-DSM-NS-200.out
CHNL# 10: [ANGL190472 [BLLDNG2 19.000] [1]] [ANGL156661 [DARL G1 22.000] [1]]
CHNL# 6: [ANGL190456 [LEPRG1 26.000] [1]] [ANGL156661 [DARL G1 22.000] [1]]
CHNL# 5: [ANGL190450 [MACTG1 13.800] [1]] [ANGL156661 [DARL G1 22.000] [1]]
CHNL# 3: [ANGL126652 [RAV 3 22.000] [1]] [ANGL156661 [DARL G1 22.000] [1]]
CHNL# 2: [ANGL101063 [MYST G7 22.000] [1]] [ANGL156661 [DARL G1 22.000] [1]]
CHNL# 1: [ANGL100060 [MIS GT1 18.000] [1]] [ANGL156661 [DARL G1 22.000] [1]]
100.00
-100.0
0.0
1.0000
2.0000
3.0000
4.0000
5.0000
6.0000
7.0000
8.0000
9.0000
10.000
TIME (SECONDS)
SAT, JAN 31 2009 15:42
"NE,NY,NB ANGLE"

2013 WINTER PEAK WITH DSM - DELIVER RESERVE
NS-NB=200; NB-NE=500; CBX=790; ONI=1015 ONS=704
3 PHASE FAULT ON L6007 AT BURNSIDE
CLEARED IN 6 CYCLES FROM BURNSIDE
FILE: a119-l6007_108H_3ph_recl-2013WP-DSM-NS-200.out
CHNL# 59: [POWR199169 [TUFTCV3 14.400] [3]]
CHNL# 56: [POWR199086 [TRENTON613.800] [6]]
CHNL# 55: [POWR199085 [TRENTN5 13.800] [5]]
CHNL# 54: [POWR199061 [TMP1 STO13.800] [1]]
CHNL# 52: [POWR199043 [ACONIG1 20.000] [1]]
CHNL# 50: [POWR199001 [LINGAN1 14.400] [1]]
2.5000
0.0
-1.500
1.0000
0.0
10.000
TIME (SECONDS)
SAT, JAN 31 2009 15:42
NS MW

2013 WINTER PEAK WITH DSM - DELIVER RESERVE
NS-NB=200; NB-NE=500; CBX=790; ONI=1015 ONS=704
3 PHASE FAULT ON L6007 AT BURNSIDE
CLEARED IN 6 CYCLES FROM BURNSIDE
FILE: a119-l6007_108H_3ph_recl-2013WP-DSM-NS-200.out
CHNL# 49: [POWER190472 [BLLDNG2 19.000] [1]]
CHNL# 45: [POWER190456 [LEPRG1 26.000] [1]]
CHNL# 44: [POWER190450 [MACTG1 13.800] [1]]
CHNL# 42: [POWER126652 [RAV 3 22.000] [1]]
CHNL# 41: [POWER101063 [MYST G7 22.000] [1]]
CHNL# 40: [POWER100060 [MIS GT1 18.000] [1]]
5.0000
0.0
4.0000
1.0000
10.000
TIME (SECONDS)
SAT, JAN 31 2009 15:42
"NE,NY,NB POWER"

2013 WINTER PEAK WITH DSM - DELIVER RESERVE
NS-NB=200; NB-NE=500; CBX=790; ONI=1015 ONS=704
3 PHASE FAULT ON L6007 AT BURNSIDE
CLEARED IN 6 CYCLES FROM BURNSIDE
FILE: a119-l6007_108H_3ph_recl-2013WP-DSM-NS-200.out
CHNL# 119: [VARS IR141-DIGBY]
CHNL# 118: [VARS IR137-STATIA]
CHNL# 117: [VARS IR114-GLENDHU]
CHNL# 116: [VARS IR84-DALHOUSIE]
CHNL# 115: [VARS IR82_NUTTBY]
CHNL# 114: [VARS IR45_AMHERST]
0.50000
-0.5000
TIME (SECONDS)
SAT, JAN 31 2009 15:42
NS WIND MV

2013 WINTER PEAK WITH DSM - DELIVER RESERVE
NS-NB=200; NB-NE=500; CBX=790; ONI=1015 ONS=704
3 PHASE FAULT ON L6007 AT BURNSIDE
CLEARED IN 6 CYCLES FROM BURNSIDE
FILE: a119-l6007_108H_3ph_recl-2013WP-DSM-NS-200.out
CHNL# 79: [POWER IR141-DIGBY]
CHNL# 78: [POWER IR137-STATIA]
CHNL# 77: [POWER IR114-GLENDHU]
CHNL# 76: [POWER IR84-DALHOUSIE]
CHNL# 75: [POWER IR82_NUTTBY]
CHNL# 74: [POWER IR45_AMHERST]
1.0000
0.0
TIME (SECONDS)
SAT, JAN 31 2009 15:42
NS WIND MW

2013 WINTER PEAK WITH DSM - DELIVER RESERVE
NS-NB=200; NB-NE=500; CBX=790; ONI=1015 ONS=704
3 PHASE FAULT ON L6007 AT BURNSIDE
CLEARED IN 6 CYCLES FROM BURNSIDE
FILE: a119-l6007_108H_3ph_recl-2013WP-DSM-NS-200.out
CHNL# 133: [VOLT199125 IONSLOW 345.00]
CHNL# 132: [VOLT199120 [HOPEWELL345.00]
CHNL# 131: [VOLT199045 [WOODBINE345.00]
CHNL# 130: [VOLT190320 [SALBRY 345.00]
CHNL# 128: [VOLT190004 [KESWICK 345.00]
CHNL# 127: [VOLT 70002 [ORRINGTN345.00]
1.1000
0.90000
TIME (SECONDS)
SAT, JAN 31 2009 15:42
"345KV VOLTAGE"

2013 WINTER PEAK WITH DSM - DELIVER RESERVE
NS-NB=200; NB-NE=500; CBX=790; ONI=1015 ONS=704
3 PHASE FAULT ON L6007 AT BURNSIDE
CLEARED IN 6 CYCLES FROM BURNSIDE
FILE: a119-l6007_108H_3ph_recl-2013WP-DSM-NS-200.out
CHNL# 125: 60*(1+[FREQ199125 [ONSLOW 345.00])
CHNL# 124: 60*(1+[FREQ199120 [HOPEWELL345.00])
CHNL# 123: 60*(1+[FREQ199045 [WOODBINE345.00])
CHNL# 122: 60*(1+[FREQ190320 [SALBRY 345.00])
CHNL# 121: 60*(1+[FREQ190197 [C.COVE 345.00])
CHNL# 120: 60*(1+[FREQ 70002 [ORRINGTN345.00])
60.500
59.500
TIME (SECONDS)
SAT, JAN 31 2009 15:42
FREQUENCY HZ

2013 WINTER PEAK WITH DSM - DELIVER RESERVE
NS-NB=200; NB-NE=500; CBX=790; ONI=1015 ONS=704
3 PHASE FAULT ON L6007 AT BURNSIDE
CLEARED IN 6 CYCLES FROM BURNSIDE
FILE: a119-l6007_108H_3ph_recl-2013WP-DSM-NS-200.out
CHNL# 141: [VOLT199051 [HASTINGS138.00]]
CHNL# 142: [VOLT199090 [SON-TREN138.00]]
CHNL# 143: [VOLT199135 [SPRNGHIL138.00]]
CHNL# 144: [VOLT199165 [TUFTCOVE138.00]]
CHNL# 145: [VOLT199193 [HWAS_138.00]]
CHNL# 146: [VOLT199280 [TUSKET_A138.00]]
1.2000
0.70000
0.0
1.0000
2.0000
3.0000
4.0000
5.0000
6.0000
7.0000
8.0000
9.0000
10.000
TIME (SECONDS)
SAT, JAN 31 2009 15:42
138KV BUS VOLTS

2013 WINTER PEAK WITH DSM - DELIVER RESERVE
NS-NB=200; NB-NE=500; CBX=790; ONI=1015 ONS=704
3 PHASE FAULT ON L6007 AT BURNSIDE
CLEARED IN 6 CYCLES FROM BURNSIDE
FILE: a119-l6007_108H_3ph_recl-2013WP-DSM-NS-200.out
CHNL# 135: [VOLT199000 [LINGAN_230.00]]
CHNL# 136: [VOLT199044 [PT.ACONI230.00]]
CHNL# 137: [VOLT199050 [HASTINGS230.00]]
CHNL# 138: [VOLT199130 [ONSLOW_230.00]]
CHNL# 139: [VOLT199200 [BRUSHY_230.00]]
CHNL# 140: [VOLT199240 [BWATER_A230.00]]
1.2000
0.70000
0.0
1.0000
2.0000
3.0000
4.0000
5.0000
6.0000
7.0000
8.0000
9.0000
10.000
TIME (SECONDS)
SAT, JAN 31 2009 15:42
230KV BUS VOLTS

2013 WINTER PEAK WITH DSM - DELIVER RESERVE
NS-NB=200; NB-NE=500; CBX=790; ONI=1015 ONS=704
3 PHASE FAULT ON L6007 AT BURNSIDE
CLEARED IN 6 CYCLES FROM BURNSIDE
FILE: a119-l6007_108H_3ph_recl-2013WP-DSM-NS-200.out
CHNL# 217: [L6513MW]
CHNL# 221: [L3001MW]
CHNL# 193: [L8001MW]
CHNL# 195: [L8004MW]
CHNL# 197: [L8003MW]
CHNL# 215: [L6503MW]
250.00
-250.0
1000.0
-1000.
500.00
0.0
TIME (SECONDS)
SAT, JAN 31 2009 15:42
LINE FLOW MW

2013 WINTER PEAK WITH DSM - DELIVER RESERVE
NS-NB=200; NB-NE=500; CBX=790; ONI=1015 ONS=704
3 PHASE FAULT ON L6007 AT BURNSIDE
CLEARED IN 6 CYCLES FROM BURNSIDE
FILE: a119-l6007_108H_3ph_recl-2013WP-DSM-NS-200.out
CHNL# 149: [R45_AMHERTP138.0 VOLTS]
CHNL# 150: [R82_NUTBHV69.0 VOLTS]
CHNL# 151: [R84-DALHOHV230.0 VOLTS]
CHNL# 152: [R114-GLENDH138.0 VOLTS]
CHNL# 153: [R137-STATIG25.0 VOLTS]
CHNL# 154: [R141-DIGBYH69.0 VOLTS]
1.2000
0.70000
0.0
1.0000
2.0000
3.0000
4.0000
5.0000
6.0000
7.0000
8.0000
9.0000
10.000
TIME (SECONDS)
SAT, JAN 31 2009 15:42
WIND BUS VOLTS

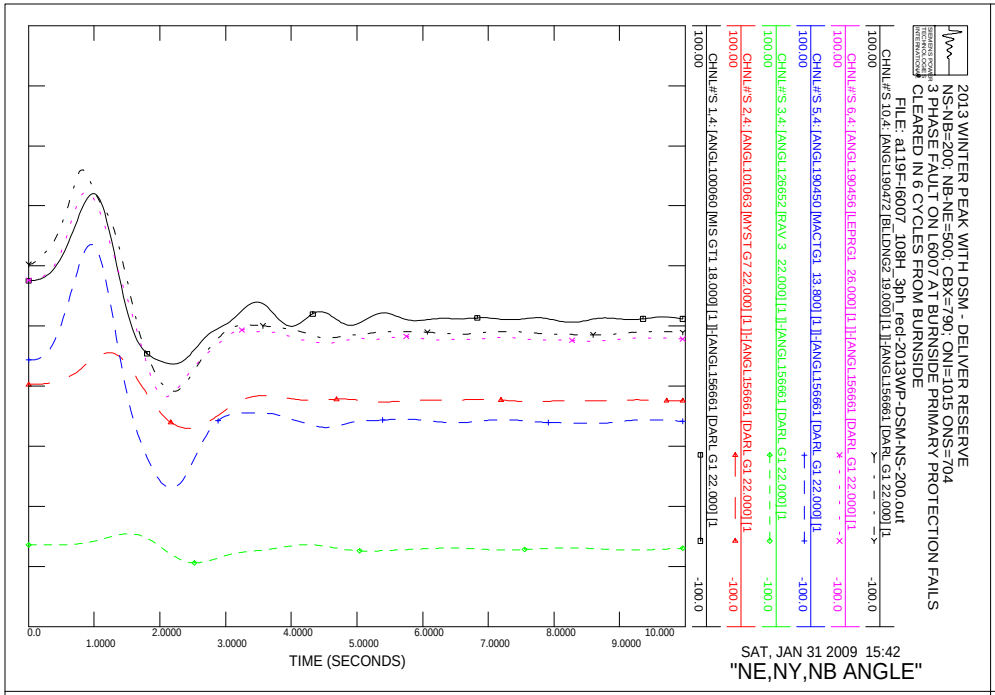
2013 WINTER PEAK WITH DSM - DELIVER RESERVE
NS-NB=200; NB-NE=500; CBX=790; ONI=1015 ONS=704
3 PHASE FAULT ON L6007 AT BURNSIDE PRIMARY PROTECTION FAILS
CLEARED IN 6 CYCLES FROM BURNSIDE
FILE: a119F-I6007_108H_3ph_recl-2013WP-DSM-NS-200.out
CHNL#S 10,4: [ANGL190472 [BLLDNG2 19.000] [1]]-[ANGL156661 [DARL G1 22.000] [1
CHNL#S 6,4: [ANGL190456 [LEPRG1 26.000] [1]]-[ANGL156661 [DARL G1 22.000] [1
CHNL#S 5,4: [ANGL190450 [MACTG1 13.800] [1]]-[ANGL156661 [DARL G1 22.000] [1
CHNL#S 3,4: [ANGL126652 [RAV 3 22.000] [1]]-[ANGL156661 [DARL G1 22.000] [1
CHNL#S 2,4: [ANGL101063 [MYST G7 22.000] [1]]-[ANGL156661 [DARL G1 22.000] [1
CHNL#S 1,4: [ANGL100060 [MIS GT1 18.000] [1]]-[ANGL156661 [DARL G1 22.000] [1
100.00
-100.0
TIME (SECONDS)
SAT, JAN 31 2009 15:42
"NE,NY,NB ANGLE"

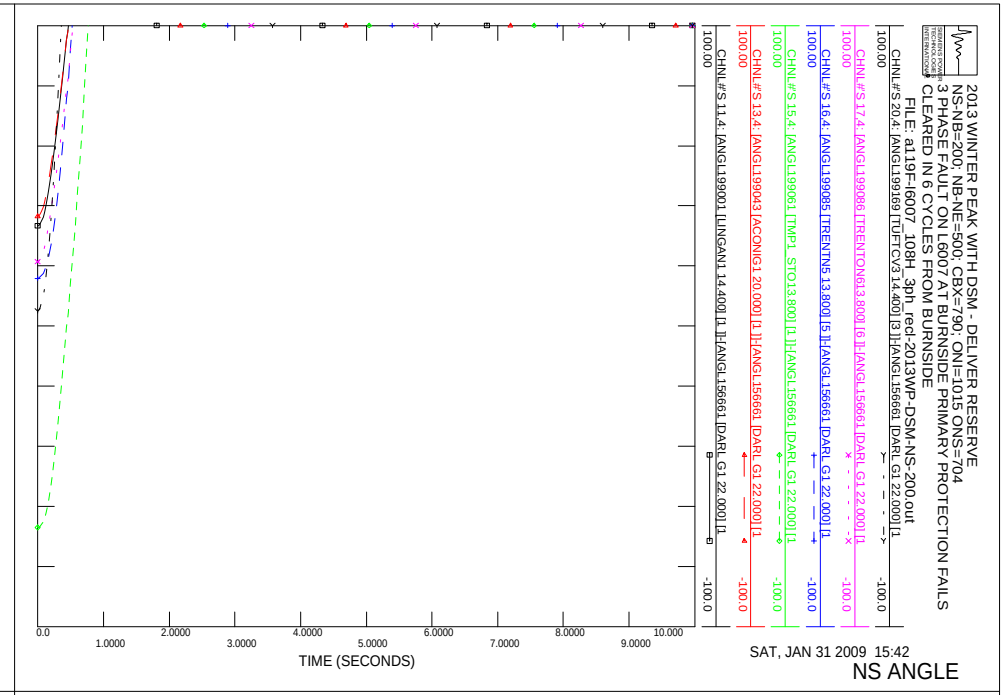
2013 WINTER PEAK WITH DSM - DELIVER RESERVE
NS-NB=200; NB-NE=500; CBX=790; ONI=1015 ONS=704
3 PHASE FAULT ON L6007 AT BURNSIDE PRIMARY PROTECTION FAILS
CLEARED IN 6 CYCLES FROM BURNSIDE
FILE: a119F-I6007_108H_3ph_recl-2013WP-DSM-NS-200.out
CHNL#S 20,4: [ANGL199169 [TUFTCV3 14.400] [3]]-[ANGL156661 [DARL G1 22.000] [1
CHNL#S 17,4: [ANGL199086 [TRENTON613.800] [6]]-[ANGL156661 [DARL G1 22.000] [1
CHNL#S 16,4: [ANGL199085 [TRENTN5 13.800] [5]]-[ANGL156661 [DARL G1 22.000] [1
CHNL#S 15,4: [ANGL199061 [TMP1 STO13.800] [1]]-[ANGL156661 [DARL G1 22.000] [1
CHNL#S 13,4: [ANGL199043 [ACONIG1 20.000] [1]]-[ANGL156661 [DARL G1 22.000] [1
CHNL#S 11,4: [ANGL199001 [LINGAN1 14.400] [1]]-[ANGL156661 [DARL G1 22.000] [1
100.00
-100.0
TIME (SECONDS)
SAT, JAN 31 2009 15:42
NS ANGLE

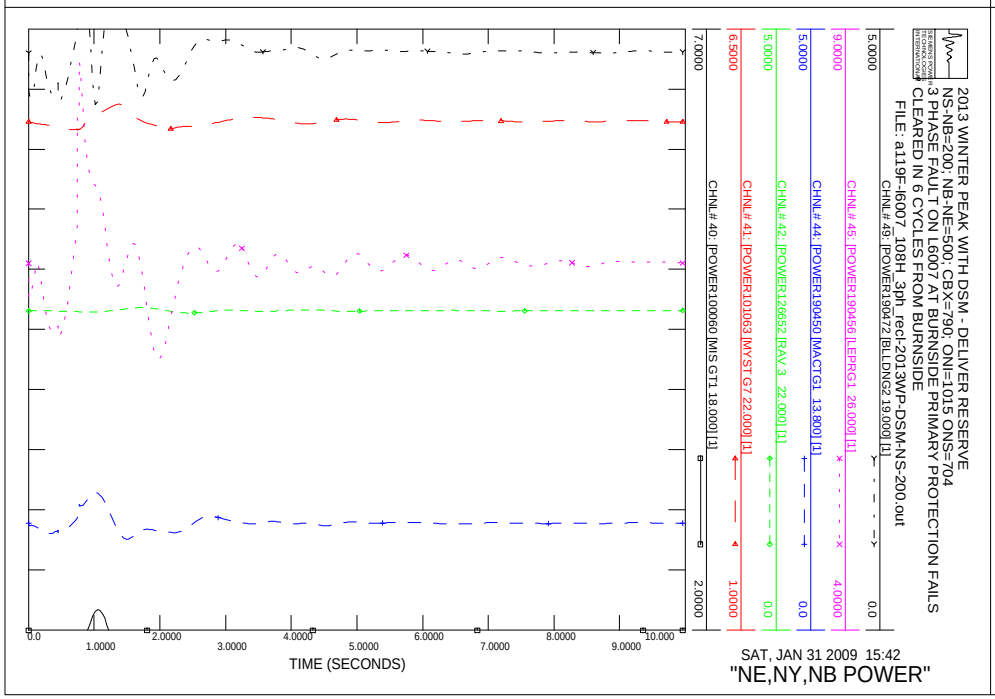
2013 WINTER PEAK WITH DSM - DELIVER RESERVE
NS-NB=200; NB-NE=500; CBX=790; ONI=1015 ONS=704
3 PHASE FAULT ON L6007 AT BURNSIDE PRIMARY PROTECTION FAILS
CLEARED IN 6 CYCLES FROM BURNSIDE
FILE: a119F-I6007_108H_3ph_recl-2013WP-DSM-NS-200.out
CHNL# 49: [POWER190472 [BLLDNG2 19.000] [1]
CHNL# 45: [POWER190456 [LEPRG1 26.000] [1]
CHNL# 44: [POWER190450 [MACTG1 13.800] [1]
CHNL# 42: [POWER126652 [RAV 3 22.000] [1]
CHNL# 41: [POWER101063 [MYST G7 22.000] [1]
CHNL# 40: [POWER100060 [MIS GT1 18.000] [1]
5.0000
0.0
TIME (SECONDS)
SAT, JAN 31 2009 15:42
"NE,NY,NB POWER"

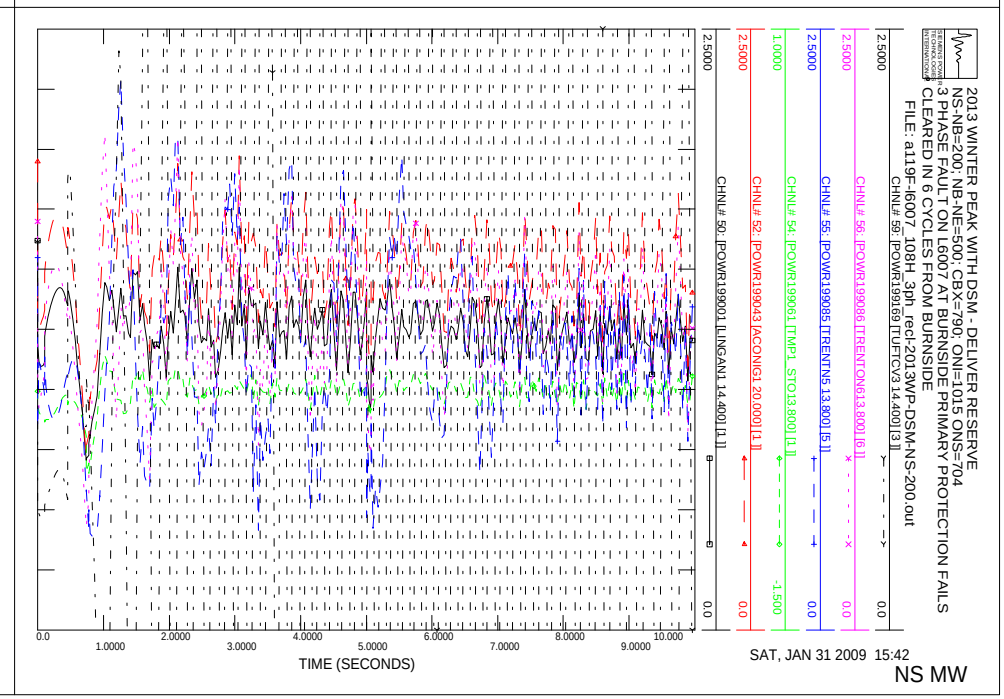
2013 WINTER PEAK WITH DSM - DELIVER RESERVE
NS-NB=200; NB-NE=500; CBX=790; ONI=1015 ONS=704
3 PHASE FAULT ON L6007 AT BURNSIDE PRIMARY PROTECTION FAILS
CLEARED IN 6 CYCLES FROM BURNSIDE
FILE: a119F-I6007_108H_3ph_recl-2013WP-DSM-NS-200.out
CHNL# 59: [POWR199169 [TUFTCV3 14.400] [3]]
CHNL# 56: [POWR199086 [TRENTON613.800] [6]]
CHNL# 55: [POWR199085 [TRENTN5 13.800] [5]]
CHNL# 54: [POWR199061 [TMP1 STO13.800] [1]]
CHNL# 52: [POWR199043 [ACONIG1 20.000] [1]]
CHNL# 50: [POWR199001 [LINGAN1 14.400] [1]]
2.5000
0.0
TIME (SECONDS)
SAT, JAN 31 2009 15:42
NS MW

2013 WINTER PEAK WITH DSM - DELIVER RESERVE
NS-NB=200; NB-NE=500; CBX=790; ONI=1015 ONS=704
3 PHASE FAULT ON L6007 AT BURNSIDE PRIMARY PROTECTION FAILS
CLEARED IN 6 CYCLES FROM BURNSIDE
FILE: a119F-l6007_108H_3ph_rect-2013WP-DSM-NS-200.out
CHNL# 114: [VARS IR45_AMHERST]
CHNL# 115: [VARS IR82_NUTTBY]
CHNL# 116: [VARS IR84-DALHOUSIE]
CHNL# 117: [VARS IR114-GLENDHU]
CHNL# 118: [VARS IR137-STATIA]
CHNL# 119: [VARS IR141-DIGBY]
0.50000
-0.5000
0.0
1.0000
2.0000
3.0000
4.0000
5.0000
6.0000
7.0000
8.0000
9.0000
10.000
TIME (SECONDS)
SAT, JAN 31 2009 15:42
NS WIND MV

2013 WINTER PEAK WITH DSM - DELIVER RESERVE
NS-NB=200; NB-NE=500; CBX=790; ONI=1015 ONS=704
3 PHASE FAULT ON L6007 AT BURNSIDE PRIMARY PROTECTION FAILS
CLEARED IN 6 CYCLES FROM BURNSIDE
FILE: a119F-l6007_108H_3ph_rect-2013WP-DSM-NS-200.out
CHNL# 74: [POWER IR45_AMHERST]
CHNL# 75: [POWER IR82_NUTTBY]
CHNL# 76: [POWER IR84-DALHOUSIE]
CHNL# 77: [POWER IR114-GLENDHU]
CHNL# 78: [POWER IR137-STATIA]
CHNL# 79: [POWER IR141-DIGBY]
1.0000
0.0
1.0000
2.0000
3.0000
4.0000
5.0000
6.0000
7.0000
8.0000
9.0000
10.000
TIME (SECONDS)
SAT, JAN 31 2009 15:42
NS WIND MW

2013 WINTER PEAK WITH DSM - DELIVER RESERVE
NS-NB=200; NB-NE=500; CBX=790; ONI=1015 ONS=704
3 PHASE FAULT ON L6007 AT BURNSIDE PRIMARY PROTECTION FAILS
CLEARED IN 6 CYCLES FROM BURNSIDE
FILE: a119F-l6007_108H_3ph_rect-2013WP-DSM-NS-200.out
CHNL# 127: [VOLT 70002 [ORRINGTN345.00]]
CHNL# 128: [VOLT190004 [KESWICK 345.00]]
CHNL# 130: [VOLT190320 [SALBRY 345.00]]
CHNL# 131: [VOLT199045 [WOODBINE345.00]]
CHNL# 132: [VOLT199120 [HOPEWELL345.00]]
CHNL# 133: [VOLT199125 [ONSLOW 345.00]]
0.90000
1.1000
0.0
1.0000
2.0000
3.0000
4.0000
5.0000
6.0000
7.0000
8.0000
9.0000
10.000
TIME (SECONDS)
SAT, JAN 31 2009 15:42
"345KV VOLTAGE"

2013 WINTER PEAK WITH DSM - DELIVER RESERVE
NS-NB=200; NB-NE=500; CBX=790; ONI=1015 ONS=704
3 PHASE FAULT ON L6007 AT BURNSIDE PRIMARY PROTECTION FAILS
CLEARED IN 6 CYCLES FROM BURNSIDE
FILE: a119F-l6007_108H_3ph_rect-2013WP-DSM-NS-200.out
CHNL# 120: 60*(1+[FREQ 70002 [ORRINGTN345.00]])
CHNL# 121: 60*(1+[FREQ190197 [C.COVE 345.00]])
CHNL# 122: 60*(1+[FREQ190320 [SALBRY 345.00]])
CHNL# 123: 60*(1+[FREQ199045 [WOODBINE345.00]])
CHNL# 124: 60*(1+[FREQ199120 [HOPEWELL345.00]])
CHNL# 125: 60*(1+[FREQ199125 [ONSLOW 345.00]])
59.500
60.500
0.0
1.0000
2.0000
3.0000
4.0000
5.0000
6.0000
7.0000
8.0000
9.0000
10.000
TIME (SECONDS)
SAT, JAN 31 2009 15:42
FREQUENCY HZ

2013 WINTER PEAK WITH DSM - DELIVER RESERVE
NS-NB=200; NB-NE=500; CBX=790; ONI=1015 ONS=704
3 PHASE FAULT ON L6007 AT BURNSIDE PRIMARY PROTECTION FAILS
CLEARED IN 6 CYCLES FROM BURNSIDE
FILE: a119F-l6007_108H_3ph_rect-2013WP-DSM-NS-200.out
CHNL# 145: [VOLT199193 [HHWAS_138.00]]
CHNL# 144: [VOLT199165 [TUFTCOVE138.00]]
CHNL# 143: [VOLT199138 [SPRNGHIL138.00]]
CHNL# 142: [VOLT199090 [SON-TREN138.00]]
CHNL# 141: [VOLT199051 [HASTINGS138.00]]
TIME (SECONDS)
SAT, JAN 31 2009 15:42
138KV BUS VOLTS

2013 WINTER PEAK WITH DSM - DELIVER RESERVE
NS-NB=200; NB-NE=500; CBX=790; ONI=1015 ONS=704
3 PHASE FAULT ON L6007 AT BURNSIDE PRIMARY PROTECTION FAILS
CLEARED IN 6 CYCLES FROM BURNSIDE
FILE: a119F-l6007_108H_3ph_rect-2013WP-DSM-NS-200.out
CHNL# 139: [VOLT199200 [BRUSHY 230.00]]
CHNL# 138: [VOLT199130 [ONSLOW 230.00]]
CHNL# 137: [VOLT199050 [HASTINGS230.00]]
CHNL# 136: [VOLT199044 [PT.ACONI230.00]]
CHNL# 135: [VOLT199000 [LINGAN 230.00]]
TIME (SECONDS)
SAT, JAN 31 2009 15:42
230KV BUS VOLTS

2013 WINTER PEAK WITH DSM - DELIVER RESERVE
NS-NB=200; NB-NE=500; CBX=790; ONI=1015 ONS=704
3 PHASE FAULT ON L6007 AT BURNSIDE PRIMARY PROTECTION FAILS
CLEARED IN 6 CYCLES FROM BURNSIDE
FILE: a119F-l6007_108H_3ph_rect-2013WP-DSM-NS-200.out
CHNL# 217: [L6513MW]
CHNL# 215: [L6503MW]
CHNL# 197: [L8003MW]
CHNL# 195: [L8004MW]
CHNL# 193: [L8001MW]
CHNL# 221: [L3001MW]
TIME (SECONDS)
SAT, JAN 31 2009 15:42
LINE FLOW MW

2013 WINTER PEAK WITH DSM - DELIVER RESERVE
NS-NB=200; NB-NE=500; CBX=790; ONI=1015 ONS=704
3 PHASE FAULT ON L6007 AT BURNSIDE PRIMARY PROTECTION FAILS
CLEARED IN 6 CYCLES FROM BURNSIDE
FILE: a119F-l6007_108H_3ph_rect-2013WP-DSM-NS-200.out
CHNL# 153: [IR137-STATIG25.0 VOLTS]
CHNL# 152: [IR114-GLENDH138.0 VOLTS]
CHNL# 151: [IR84-DALHOHV230.0 VOLTS]
CHNL# 150: [IR82_NUTBHV69.0 VOLTS]
CHNL# 149: [IR45_ANHERTP138.0 VOLTS]
TIME (SECONDS)
SAT, JAN 31 2009 15:42
WIND BUS VOLTS

2013 WINTER PEAK WITH DSM - DELIVER RESERVE
NS-NB=200; NB-NE=500; CBX=790; ONI=1015 ONS=704
3 PHASE FAULT ON L6008 AT 108H-LAK
CLEARED IN 6 CYCLES - RECLOSE ATTEMPT IN 5 SEC FROM 91H
FILE: a120-l6008_103H_3ph_recl-2013WP-DSM-NS-200.out
CHNL# 20: [ANGL199169 [TUFTCV3 14.400] [3]] [ANGL156661 [DARL G1 22.000] [1]
CHNL# 17: [ANGL199086 [TRENTON613.800] [6]] [ANGL156661 [DARL G1 22.000] [1]
CHNL# 16: [ANGL199085 [TRENTN5 13.800] [5]] [ANGL156661 [DARL G1 22.000] [1]
CHNL# 15: [ANGL199061 [TMP1 STO13.800] [1]] [ANGL156661 [DARL G1 22.000] [1]
CHNL# 13: [ANGL199043 [ACONIG1 20.000] [1]] [ANGL156661 [DARL G1 22.000] [1]
CHNL# 11: [ANGL199001 [LINGAN1 14.400] [1]] [ANGL156661 [DARL G1 22.000] [1]
100.00
-100.0
0.0
1.0000
2.0000
3.0000
4.0000
5.0000
6.0000
7.0000
8.0000
9.0000
10.000
TIME (SECONDS)
SAT, JAN 31 2009 15:42
NS ANGLE

2013 WINTER PEAK WITH DSM - DELIVER RESERVE
NS-NB=200; NB-NE=500; CBX=790; ONI=1015 ONS=704
3 PHASE FAULT ON L6008 AT 108H-LAK
CLEARED IN 6 CYCLES - RECLOSE ATTEMPT IN 5 SEC FROM 91H
FILE: a120-l6008_103H_3ph_recl-2013WP-DSM-NS-200.out
CHNL# 10: [ANGL190472 [BLLDNG2 19.000] [1]] [ANGL156661 [DARL G1 22.000] [1]
CHNL# 6: [ANGL190456 [LEPRG1 26.000] [1]] [ANGL156661 [DARL G1 22.000] [1]
CHNL# 5: [ANGL190450 [MACTG1 13.800] [1]] [ANGL156661 [DARL G1 22.000] [1]
CHNL# 3: [ANGL126652 [RAV 3 22.000] [1]] [ANGL156661 [DARL G1 22.000] [1]
CHNL# 2: [ANGL101063 [MYST G7 22.000] [1]] [ANGL156661 [DARL G1 22.000] [1]
CHNL# 1: [ANGL100060 [MIS GT1 18.000] [1]] [ANGL156661 [DARL G1 22.000] [1]
100.00
-100.0
0.0
1.0000
2.0000
3.0000
4.0000
5.0000
6.0000
7.0000
8.0000
9.0000
10.000
TIME (SECONDS)
SAT, JAN 31 2009 15:42
"NE,NY,NB ANGLE"

2013 WINTER PEAK WITH DSM - DELIVER RESERVE
NS-NB=200; NB-NE=500; CBX=790; ONI=1015 ONS=704
3 PHASE FAULT ON L6008 AT 108H-LAK
CLEARED IN 6 CYCLES - RECLOSE ATTEMPT IN 5 SEC FROM 91H
FILE: a120-l6008_103H_3ph_recl-2013WP-DSM-NS-200.out
CHNL# 59: [POWER199169 [TUFTCV3 14.400] [3]]
CHNL# 56: [POWER199086 [TRENTON613.800] [6]]
CHNL# 55: [POWER199085 [TRENTN5 13.800] [5]]
CHNL# 54: [POWER199061 [TMP1 STO13.800] [1]]
CHNL# 52: [POWER199043 [ACONIG1 20.000] [1]]
CHNL# 50: [POWER199001 [LINGAN1 14.400] [1]]
2.5000
1.0000
0.0
-1.500
0.0
1.0000
2.0000
3.0000
4.0000
5.0000
6.0000
7.0000
8.0000
9.0000
10.000
TIME (SECONDS)
SAT, JAN 31 2009 15:42
NS MW

2013 WINTER PEAK WITH DSM - DELIVER RESERVE
NS-NB=200; NB-NE=500; CBX=790; ONI=1015 ONS=704
3 PHASE FAULT ON L6008 AT 108H-LAK
CLEARED IN 6 CYCLES - RECLOSE ATTEMPT IN 5 SEC FROM 91H
FILE: a120-l6008_103H_3ph_recl-2013WP-DSM-NS-200.out
CHNL# 49: [POWER190472 [BLLDNG2 19.000] [1]]
CHNL# 45: [POWER190456 [LEPRG1 26.000] [1]]
CHNL# 44: [POWER190450 [MACTG1 13.800] [1]]
CHNL# 42: [POWER126652 [RAV 3 22.000] [1]]
CHNL# 41: [POWER101063 [MYST G7 22.000] [1]]
CHNL# 40: [POWER100060 [MIS GT1 18.000] [1]]
5.0000
9.0000
5.0000
5.0000
6.5000
7.0000
4.0000
0.0
0.0
1.0000
2.0000
0.0
1.0000
2.0000
3.0000
4.0000
5.0000
6.0000
7.0000
8.0000
9.0000
10.000
TIME (SECONDS)
SAT, JAN 31 2009 15:42
"NE,NY,NB POWER"

2013 WINTER PEAK WITH DSM - DELIVER RESERVE
NS-NB=200; NB-NE=500; CBX=790; ONI=1015 ONS=704
3 PHASE FAULT ON L6008 AT 108H-LAK
CLEARED IN 6 CYCLES - RECLOSE ATTEMPT IN 5 SEC FROM 91H
FILE: a120-l6008_103H_3ph_recl-2013WP-DSM-NS-200.out
CHNL# 114: [VARS IR45_AMHERST]
CHNL# 115: [VARS IR82_NUTTBY]
CHNL# 116: [VARS IR84-DALHOUSIE]
CHNL# 117: [VARS IR114-GLENDHU]
CHNL# 118: [VARS IR137-STATIA]
CHNL# 119: [VARS IR141-DIGBY]
0.50000
-0.5000
TIME (SECONDS)
SAT, JAN 31 2009 15:42
NS WIND MV

2013 WINTER PEAK WITH DSM - DELIVER RESERVE
NS-NB=200; NB-NE=500; CBX=790; ONI=1015 ONS=704
3 PHASE FAULT ON L6008 AT 108H-LAK
CLEARED IN 6 CYCLES - RECLOSE ATTEMPT IN 5 SEC FROM 91H
FILE: a120-l6008_103H_3ph_recl-2013WP-DSM-NS-200.out
CHNL# 74: [POWER IR45_AMHERST]
CHNL# 75: [POWER IR82_NUTTBY]
CHNL# 76: [POWER IR84-DALHOUSIE]
CHNL# 77: [POWER IR114-GLENDHU]
CHNL# 78: [POWER IR137-STATIA]
CHNL# 79: [POWER IR141-DIGBY]
1.0000
0.0
TIME (SECONDS)
SAT, JAN 31 2009 15:42
NS WIND MW

2013 WINTER PEAK WITH DSM - DELIVER RESERVE
NS-NB=200; NB-NE=500; CBX=790; ONI=1015 ONS=704
3 PHASE FAULT ON L6008 AT 108H-LAK
CLEARED IN 6 CYCLES - RECLOSE ATTEMPT IN 5 SEC FROM 91H
FILE: a120-l6008_103H_3ph_recl-2013WP-DSM-NS-200.out
CHNL# 127: [VOLT 70002 [ORRINGTN345.00]]
CHNL# 128: [VOLT190004 [KESWICK 345.00]]
CHNL# 130: [VOLT190320 [SALBRY 345.00]]
CHNL# 131: [VOLT199045 [WOODBINE345.00]]
CHNL# 132: [VOLT199120 [HOPEWELL345.00]]
CHNL# 133: [VOLT199125 [ONSLOW 345.00]]
1.1000
0.90000
TIME (SECONDS)
SAT, JAN 31 2009 15:42
"345KV VOLTAGE"

2013 WINTER PEAK WITH DSM - DELIVER RESERVE
NS-NB=200; NB-NE=500; CBX=790; ONI=1015 ONS=704
3 PHASE FAULT ON L6008 AT 108H-LAK
CLEARED IN 6 CYCLES - RECLOSE ATTEMPT IN 5 SEC FROM 91H
FILE: a120-l6008_103H_3ph_recl-2013WP-DSM-NS-200.out
CHNL# 120: 60*(1+[FREQ 70002 [ORRINGTN345.00]])
CHNL# 121: 60*(1+[FREQ190197 [C.COVE 345.00]])
CHNL# 122: 60*(1+[FREQ190320 [SALBRY 345.00]])
CHNL# 123: 60*(1+[FREQ199045 [WOODBINE345.00]])
CHNL# 124: 60*(1+[FREQ199120 [HOPEWELL345.00]])
CHNL# 125: 60*(1+[FREQ199125 [ONSLOW 345.00]])
60.500
59.500
TIME (SECONDS)
SAT, JAN 31 2009 15:42
FREQUENCY HZ

2013 WINTER PEAK WITH DSM - DELIVER RESERVE
NS-NB=200; NB-NE=500; CBX=790; ONI=1015 ONS=704
3 PHASE FAULT ON L6008 AT 108H-LAK
CLEARED IN 6 CYCLES - RECLOSE ATTEMPT IN 5 SEC FROM 91H
FILE: a120-l6008_103H_3ph_recl-2013WP-DSM-NS-200.out
CHNL# 146: [VOLT199280 [TUSKET A138.00]]
CHNL# 145: [VOLT199193 [LH-WAS 138.00]]
CHNL# 144: [VOLT199165 [TUFTCOVE138.00]]
CHNL# 143: [VOLT199135 [SPRNGHILL138.00]]
CHNL# 142: [VOLT199090 [SON-TREN138.00]]
CHNL# 141: [VOLT199051 [HASTINGS138.00]]
1.2000
0.70000
0.0
1.0000
2.0000
3.0000
4.0000
5.0000
6.0000
7.0000
8.0000
9.0000
10.000
TIME (SECONDS)
SAT, JAN 31 2009 15:42
138KV BUS VOLTS

2013 WINTER PEAK WITH DSM - DELIVER RESERVE
NS-NB=200; NB-NE=500; CBX=790; ONI=1015 ONS=704
3 PHASE FAULT ON L6008 AT 108H-LAK
CLEARED IN 6 CYCLES - RECLOSE ATTEMPT IN 5 SEC FROM 91H
FILE: a120-l6008_103H_3ph_recl-2013WP-DSM-NS-200.out
CHNL# 140: [VOLT199240 [BWATER A230.00]]
CHNL# 139: [VOLT199200 [BRUSHY 230.00]]
CHNL# 138: [VOLT199130 [ONSLOW 230.00]]
CHNL# 137: [VOLT199050 [HASTINGS230.00]]
CHNL# 136: [VOLT199044 [PT.ACONI230.00]]
CHNL# 135: [VOLT199000 [LINGAN 230.00]]
1.2000
0.70000
0.0
1.0000
2.0000
3.0000
4.0000
5.0000
6.0000
7.0000
8.0000
9.0000
10.000
TIME (SECONDS)
SAT, JAN 31 2009 15:42
230KV BUS VOLTS

2013 WINTER PEAK WITH DSM - DELIVER RESERVE
NS-NB=200; NB-NE=500; CBX=790; ONI=1015 ONS=704
3 PHASE FAULT ON L6008 AT 108H-LAK
CLEARED IN 6 CYCLES - RECLOSE ATTEMPT IN 5 SEC FROM 91H
FILE: a120-l6008_103H_3ph_recl-2013WP-DSM-NS-200.out
CHNL# 217: [L6513MW]
CHNL# 215: [L6503MW]
CHNL# 197: [L8003MW]
CHNL# 195: [L8004MW]
CHNL# 193: [L8001MW]
CHNL# 221: [L3001MW]
250.00
-250.0
500.00
0.0
1000.0
-1000.
0.0
1.0000
2.0000
3.0000
4.0000
5.0000
6.0000
7.0000
8.0000
9.0000
10.000
TIME (SECONDS)
SAT, JAN 31 2009 15:42
LINE FLOW MW

2013 WINTER PEAK WITH DSM - DELIVER RESERVE
NS-NB=200; NB-NE=500; CBX=790; ONI=1015 ONS=704
3 PHASE FAULT ON L6008 AT 108H-LAK
CLEARED IN 6 CYCLES - RECLOSE ATTEMPT IN 5 SEC FROM 91H
FILE: a120-l6008_103H_3ph_recl-2013WP-DSM-NS-200.out
CHNL# 154: [IR141-DIGBYH69.0 VOLTS]
CHNL# 153: [IR137-STATIG25.0 VOLTS]
CHNL# 152: [IR114-GLENDH138.0 VOLTS]
CHNL# 151: [IR84-DALHOHV230.0 VOLTS]
CHNL# 150: [IR82-NUTBHV69.0 VOLTS]
CHNL# 149: [IR45-AMHERTP138.0 VOLTS]
1.2000
0.70000
0.0
1.0000
2.0000
3.0000
4.0000
5.0000
6.0000
7.0000
8.0000
9.0000
10.000
TIME (SECONDS)
SAT, JAN 31 2009 15:42
WIND BUS VOLTS

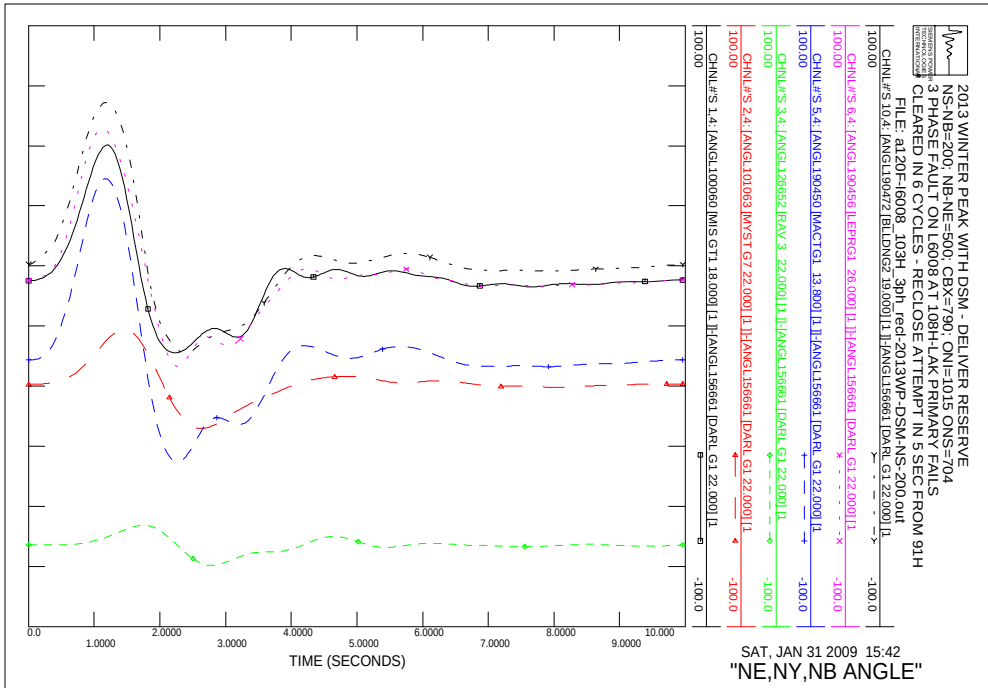
2013 WINTER PEAK WITH DSM - DELIVER RESERVE
NS-NB=200; NB-NE=500; CBX=790; ONI=1015 ONS=704
3 PHASE FAULT ON L6008 AT 108H-LAK PRIMARY FAILS
CLEARED IN 6 CYCLES - RECLOSE ATTEMPT IN 5 SEC FROM 91H
FILE: a120F-I6008_103H_3ph_recl-2013WP-DSM-NS-200.out
CHNL#S 10,4: [ANGL190472 [BLLDNG2 19.000] [1]]-[ANGL156661 [DARL G1 22.000] [1
CHNL#S 6,4: [ANGL190456 [LEPRG1 26.000] [1]]-[ANGL156661 [DARL G1 22.000] [1
CHNL#S 5,4: [ANGL190450 [MACTG1 13.800] [1]]-[ANGL156661 [DARL G1 22.000] [1
CHNL#S 3,4: [ANGL126652 [RAV 3 22.000] [1]]-[ANGL156661 [DARL G1 22.000] [1
CHNL#S 2,4: [ANGL101063 [MYST G7 22.000] [1]]-[ANGL156661 [DARL G1 22.000] [1
CHNL#S 1,4: [ANGL100060 [MIS GT1 18.000] [1]]-[ANGL156661 [DARL G1 22.000] [1
100.00
-100.0
TIME (SECONDS)
SAT, JAN 31 2009 15:42
"NE,NY,NB ANGLE"

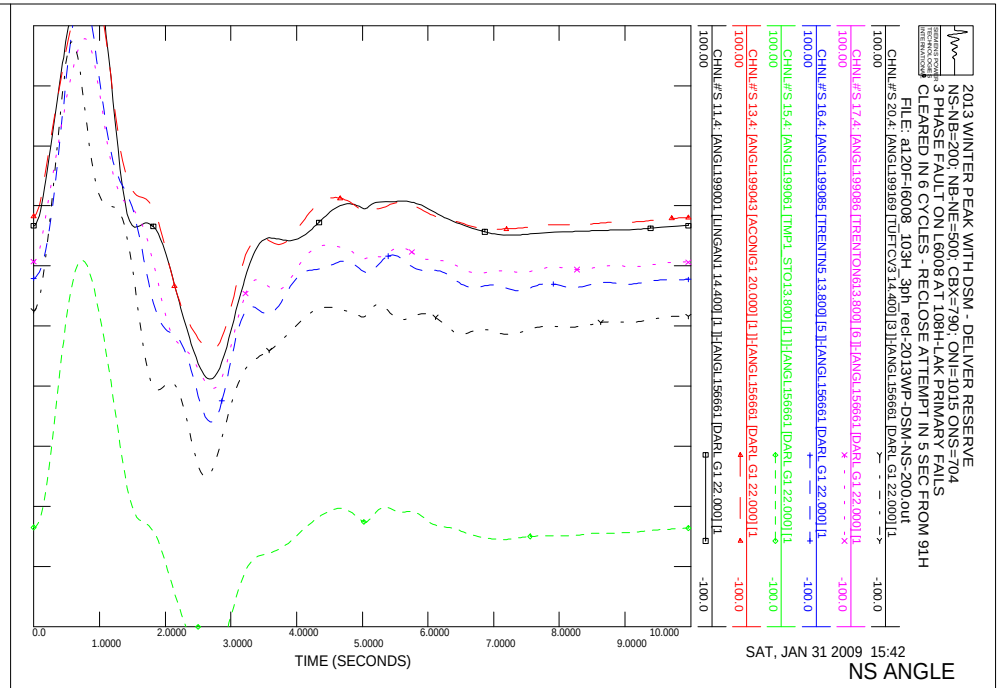
2013 WINTER PEAK WITH DSM - DELIVER RESERVE
NS-NB=200; NB-NE=500; CBX=790; ONI=1015 ONS=704
3 PHASE FAULT ON L6008 AT 108H-LAK PRIMARY FAILS
CLEARED IN 6 CYCLES - RECLOSE ATTEMPT IN 5 SEC FROM 91H
FILE: a120F-I6008_103H_3ph_recl-2013WP-DSM-NS-200.out
CHNL#S 20,4: [ANGL199169 [TUFTCV3 14.400] [3]]-[ANGL156661 [DARL G1 22.000] [1
CHNL#S 17,4: [ANGL199086 [TRENTON613.800] [6]]-[ANGL156661 [DARL G1 22.000] [1
CHNL#S 16,4: [ANGL199085 [TRENTN5 13.800] [5]]-[ANGL156661 [DARL G1 22.000] [1
CHNL#S 15,4: [ANGL199061 [TMP1 STO13.800] [1]]-[ANGL156661 [DARL G1 22.000] [1
CHNL#S 13,4: [ANGL199043 [ACONIG1 20.000] [1]]-[ANGL156661 [DARL G1 22.000] [1
CHNL#S 11,4: [ANGL199001 [LINGAN1 14.400] [1]]-[ANGL156661 [DARL G1 22.000] [1
100.00
-100.0
TIME (SECONDS)
SAT, JAN 31 2009 15:42
NS ANGLE

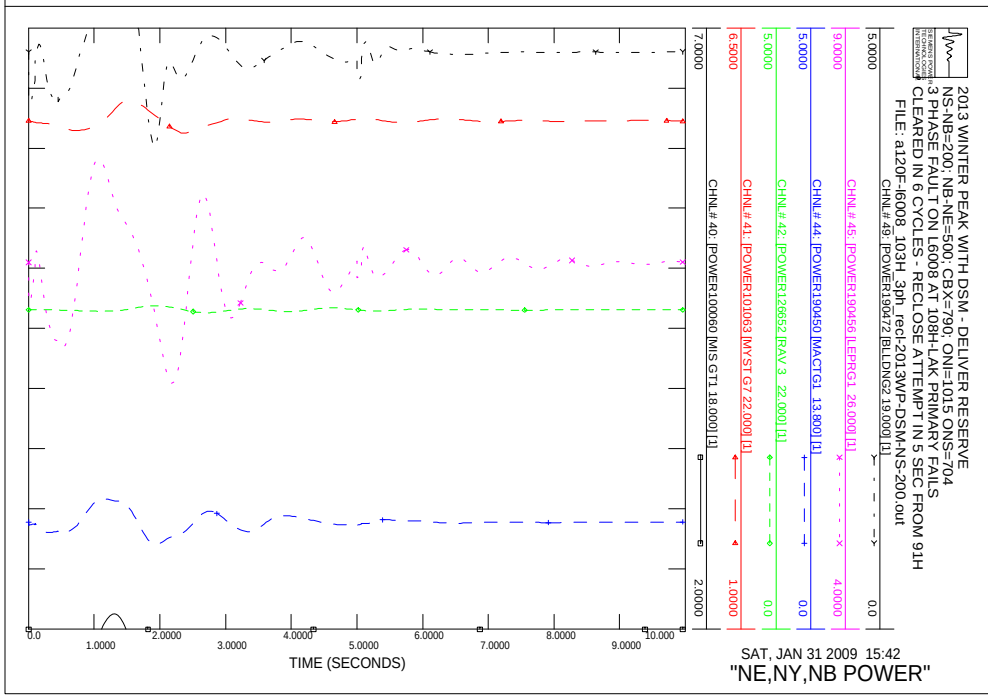
2013 WINTER PEAK WITH DSM - DELIVER RESERVE
NS-NB=200; NB-NE=500; CBX=790; ONI=1015 ONS=704
3 PHASE FAULT ON L6008 AT 108H-LAK PRIMARY FAILS
CLEARED IN 6 CYCLES - RECLOSE ATTEMPT IN 5 SEC FROM 91H
FILE: a120F-I6008_103H_3ph_recl-2013WP-DSM-NS-200.out
CHNL# 49: [POWER190472 [BLLDNG2 19.000] [1]
CHNL# 45: [POWER190456 [LEPRG1 26.000] [1]
CHNL# 44: [POWER190450 [MACTG1 13.800] [1]
CHNL# 42: [POWER126652 [RAV 3 22.000] [1]
CHNL# 41: [POWER101063 [MYST G7 22.000] [1]
CHNL# 40: [POWER100060 [MIS GT1 18.000] [1]
5.0000
0.0
TIME (SECONDS)
SAT, JAN 31 2009 15:42
"NE,NY,NB POWER"

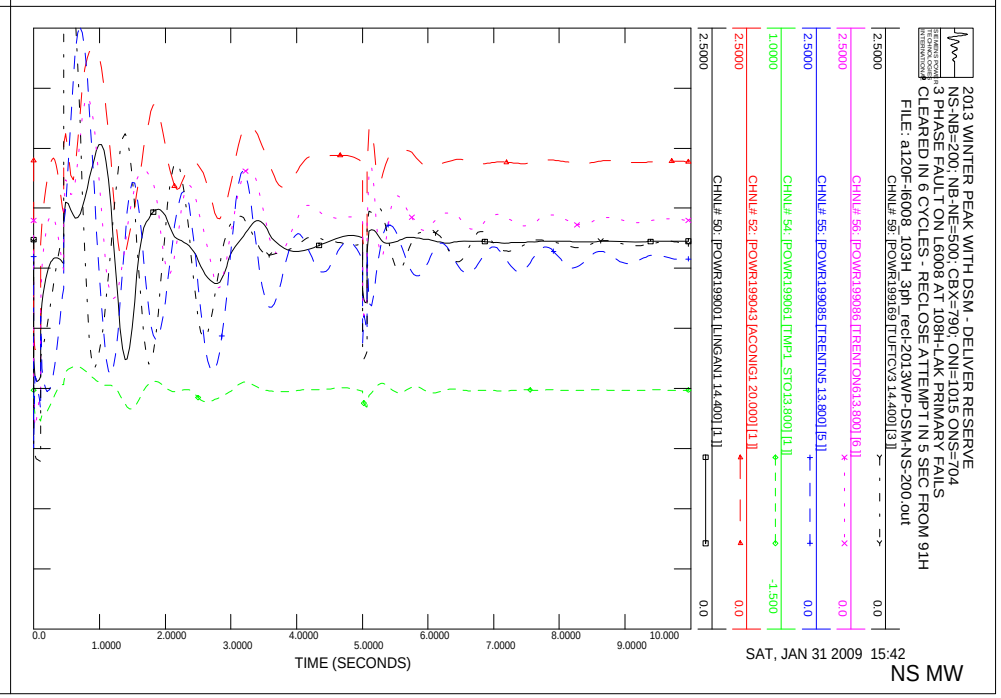
2013 WINTER PEAK WITH DSM - DELIVER RESERVE
NS-NB=200; NB-NE=500; CBX=790; ONI=1015 ONS=704
3 PHASE FAULT ON L6008 AT 108H-LAK PRIMARY FAILS
CLEARED IN 6 CYCLES - RECLOSE ATTEMPT IN 5 SEC FROM 91H
FILE: a120F-I6008_103H_3ph_recl-2013WP-DSM-NS-200.out
CHNL# 59: [POWR199169 [TUFTCV3 14.400] [3]]
CHNL# 56: [POWR199086 [TRENTON613.800] [6]]
CHNL# 55: [POWR199085 [TRENTN5 13.800] [5]]
CHNL# 54: [POWR199061 [TMP1 STO13.800] [1]]
CHNL# 52: [POWR199043 [ACONIG1 20.000] [1]]
CHNL# 50: [POWR199001 [LINGAN1 14.400] [1]]
2.5000
0.0
TIME (SECONDS)
SAT, JAN 31 2009 15:42
NS MW

2013 WINTER PEAK WITH DSM - DELIVER RESERVE
NS-NB=200; NB-NE=500; CBX=790; ONI=1015 ONS=704
3 PHASE FAULT ON L6008 AT 108H-LAK PRIMARY FAILS
CLEARED IN 6 CYCLES - RECLOSE ATTEMPT IN 5 SEC FROM 91H
FILE: a120F-l6008_103H_3ph_rect-2013WP-DSM-NS-200.out
CHNL# 119: [VARS IR141-DIGBY]
CHNL# 118: [VARS IR137-STATIA]
CHNL# 117: [VARS IR114-GLENDHU]
CHNL# 116: [VARS IR84-DALHOUSIE]
CHNL# 115: [VARS IR82_NUTTBY]
CHNL# 114: [VARS IR45_AMHERST]
TIME (SECONDS)
SAT, JAN 31 2009 15:42
NS WIND MV

2013 WINTER PEAK WITH DSM - DELIVER RESERVE
NS-NB=200; NB-NE=500; CBX=790; ONI=1015 ONS=704
3 PHASE FAULT ON L6008 AT 108H-LAK PRIMARY FAILS
CLEARED IN 6 CYCLES - RECLOSE ATTEMPT IN 5 SEC FROM 91H
FILE: a120F-l6008_103H_3ph_rect-2013WP-DSM-NS-200.out
CHNL# 79: [POWER IR141-DIGBY]
CHNL# 78: [POWER IR137-STATIA]
CHNL# 77: [POWER IR114-GLENDHU]
CHNL# 76: [POWER IR84-DALHOUSIE]
CHNL# 75: [POWER IR82_NUTTBY]
CHNL# 74: [POWER IR45_AMHERST]
TIME (SECONDS)
SAT, JAN 31 2009 15:42
NS WIND MW

2013 WINTER PEAK WITH DSM - DELIVER RESERVE
NS-NB=200; NB-NE=500; CBX=790; ONI=1015 ONS=704
3 PHASE FAULT ON L6008 AT 108H-LAK PRIMARY FAILS
CLEARED IN 6 CYCLES - RECLOSE ATTEMPT IN 5 SEC FROM 91H
FILE: a120F-l6008_103H_3ph_rect-2013WP-DSM-NS-200.out
CHNL# 133: [VOLT199125 [ONSLOW 345.00]]
CHNL# 132: [VOLT199120 [HOPEWELL 345.00]]
CHNL# 131: [VOLT199045 [WOODBINE345.00]]
CHNL# 130: [VOLT190320 [SALBRY 345.00]]
CHNL# 128: [VOLT190004 [KESWICK 345.00]]
CHNL# 127: [VOLT 70002 [ORRINGTN345.00]]
TIME (SECONDS)
SAT, JAN 31 2009 15:42
"345KV VOLTAGE"

2013 WINTER PEAK WITH DSM - DELIVER RESERVE
NS-NB=200; NB-NE=500; CBX=790; ONI=1015 ONS=704
3 PHASE FAULT ON L6008 AT 108H-LAK PRIMARY FAILS
CLEARED IN 6 CYCLES - RECLOSE ATTEMPT IN 5 SEC FROM 91H
FILE: a120F-l6008_103H_3ph_rect-2013WP-DSM-NS-200.out
CHNL# 125: 60*(1+[FREQ199125 [ONSLOW 345.00]])
CHNL# 124: 60*(1+[FREQ199120 [HOPEWELL 345.00]])
CHNL# 123: 60*(1+[FREQ199045 [WOODBINE345.00]])
CHNL# 122: 60*(1+[FREQ190320 [SALBRY 345.00]])
CHNL# 121: 60*(1+[FREQ190197 [C.COVE 345.00]])
CHNL# 120: 60*(1+[FREQ 70002 [ORRINGTN345.00]])
TIME (SECONDS)
SAT, JAN 31 2009 15:42
FREQUENCY HZ

2013 WINTER PEAK WITH DSM - DELIVER RESERVE
NS-NB=200; NB-NE=500; CBX=790; ONI=1015 ONS=704
3 PHASE FAULT ON L6008 AT 108H-LAK PRIMARY FAILS
CLEARED IN 6 CYCLES - RECLOSE ATTEMPT IN 5 SEC FROM 91H
FILE: a120F-l6008_103H_3ph_rect-2013WP-DSM-NS-200.out
CHNL# 146: [VOLT199280 [TUSKET A138.00]] 0.70000
CHNL# 145: [VOLT199193 [HHWAS 138.00]] 0.70000
CHNL# 144: [VOLT199165 [TUFTCOVE138.00]] 0.70000
CHNL# 143: [VOLT199135 [SPRNGHILL138.00]] 0.70000
CHNL# 142: [VOLT199090 [SON-TREN138.00]] 0.70000
CHNL# 141: [VOLT199051 [HASTINGS138.00]] 0.70000
SAT, JAN 31 2009 15:42
138KV BUS VOLTS
TIME (SECONDS)

2013 WINTER PEAK WITH DSM - DELIVER RESERVE
NS-NB=200; NB-NE=500; CBX=790; ONI=1015 ONS=704
3 PHASE FAULT ON L6008 AT 108H-LAK PRIMARY FAILS
CLEARED IN 6 CYCLES - RECLOSE ATTEMPT IN 5 SEC FROM 91H
FILE: a120F-l6008_103H_3ph_rect-2013WP-DSM-NS-200.out
CHNL# 140: [VOLT199240 [BWATER A230.00]] 0.70000
CHNL# 139: [VOLT199200 [BRUSHY 230.00]] 0.70000
CHNL# 138: [VOLT199130 [ONSLOW 230.00]] 0.70000
CHNL# 137: [VOLT199050 [HASTINGS230.00]] 0.70000
CHNL# 136: [VOLT199044 [PT.ACONI230.00]] 0.70000
CHNL# 135: [VOLT199000 [LINGAN 230.00]] 0.70000
SAT, JAN 31 2009 15:42
230KV BUS VOLTS
TIME (SECONDS)

2013 WINTER PEAK WITH DSM - DELIVER RESERVE
NS-NB=200; NB-NE=500; CBX=790; ONI=1015 ONS=704
3 PHASE FAULT ON L6008 AT 108H-LAK PRIMARY FAILS
CLEARED IN 6 CYCLES - RECLOSE ATTEMPT IN 5 SEC FROM 91H
FILE: a120F-l6008_103H_3ph_rect-2013WP-DSM-NS-200.out
CHNL# 217: [L6513MW] -250.0
CHNL# 215: [L6503MW] 0.0
CHNL# 197: [L8003MW] 0.0
CHNL# 195: [L8004MW] 0.0
CHNL# 193: [L8001MW] -1000.
CHNL# 221: [L3001MW] -1000.
SAT, JAN 31 2009 15:42
LINE FLOW MW
TIME (SECONDS)

2013 WINTER PEAK WITH DSM - DELIVER RESERVE
NS-NB=200; NB-NE=500; CBX=790; ONI=1015 ONS=704
3 PHASE FAULT ON L6008 AT 108H-LAK PRIMARY FAILS
CLEARED IN 6 CYCLES - RECLOSE ATTEMPT IN 5 SEC FROM 91H
FILE: a120F-l6008_103H_3ph_rect-2013WP-DSM-NS-200.out
CHNL# 154: [IR141-DIGBYH69.0 VOLTS] 0.70000
CHNL# 153: [IR137-STATIG25.0 VOLTS] 0.70000
CHNL# 152: [IR114-GLENDH138.0 VOLTS] 0.70000
CHNL# 151: [IR84-DALHOHV230.0 VOLTS] 0.70000
CHNL# 150: [IR82_NUTBHV69.0 VOLTS] 0.70000
CHNL# 149: [IR45_AMHERTP138.0 VOLTS] 0.70000
SAT, JAN 31 2009 15:42
WIND BUS VOLTS
TIME (SECONDS)

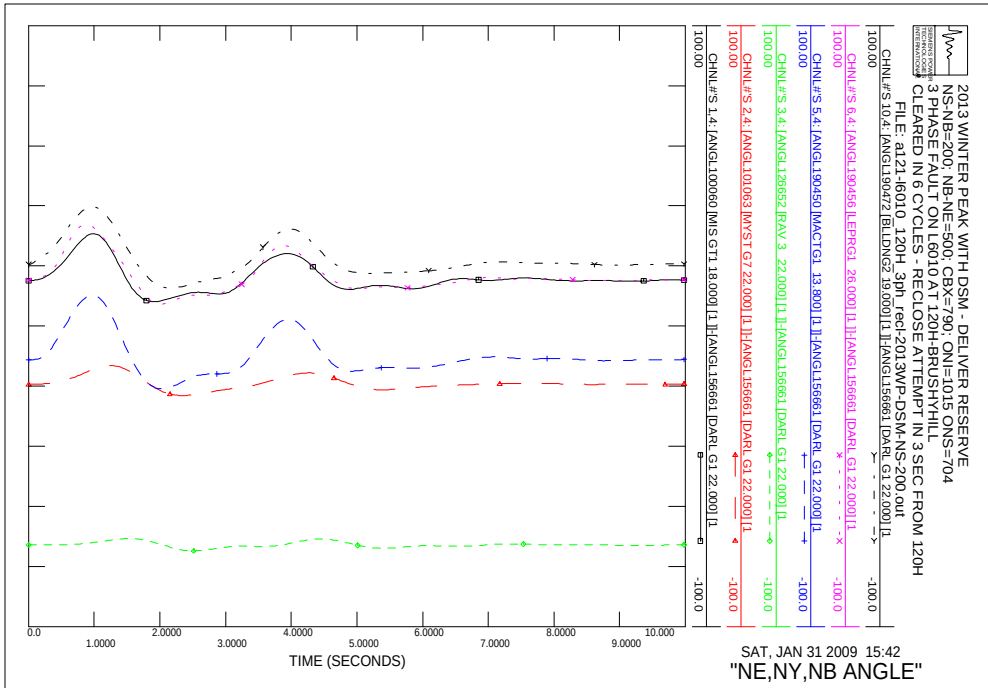
2013 WINTER PEAK WITH DSM - DELIVER RESERVE
NS-NB=200; NB-NE=500; CBX=790; ONI=1015 ONS=704
3 PHASE FAULT ON L6010 AT 120H-BRUSHYHILL
CLEARED IN 6 CYCLES - RECLOSE ATTEMPT IN 3 SEC FROM 120H
FILE: a121-l6010_120H_3ph_recl-2013WP-DSM-NS-200.out
CHNL#'S 10,4: [ANGL190472 [BLLDNG2 19.000] [1]]-[ANGL156661 [DARL G1 22.000] [1
CHNL#'S 6,4: [ANGL190456 [LEPRG1 26.000] [1]]-[ANGL156661 [DARL G1 22.000] [1
CHNL#'S 5,4: [ANGL190450 [MACTG1 13.800] [1]]-[ANGL156661 [DARL G1 22.000] [1
CHNL#'S 3,4: [ANGL126652 [RAV 3 22.000] [1]]-[ANGL156661 [DARL G1 22.000] [1
CHNL#'S 2,4: [ANGL101063 [MYST G7 22.000] [1]]-[ANGL156661 [DARL G1 22.000] [1
CHNL#'S 1,4: [ANGL100060 [MIS GT1 18.000] [1]]-[ANGL156661 [DARL G1 22.000] [1
100.00
-100.0
TIME (SECONDS)
SAT, JAN 31 2009 15:42
"NE,NY,NB ANGLE"

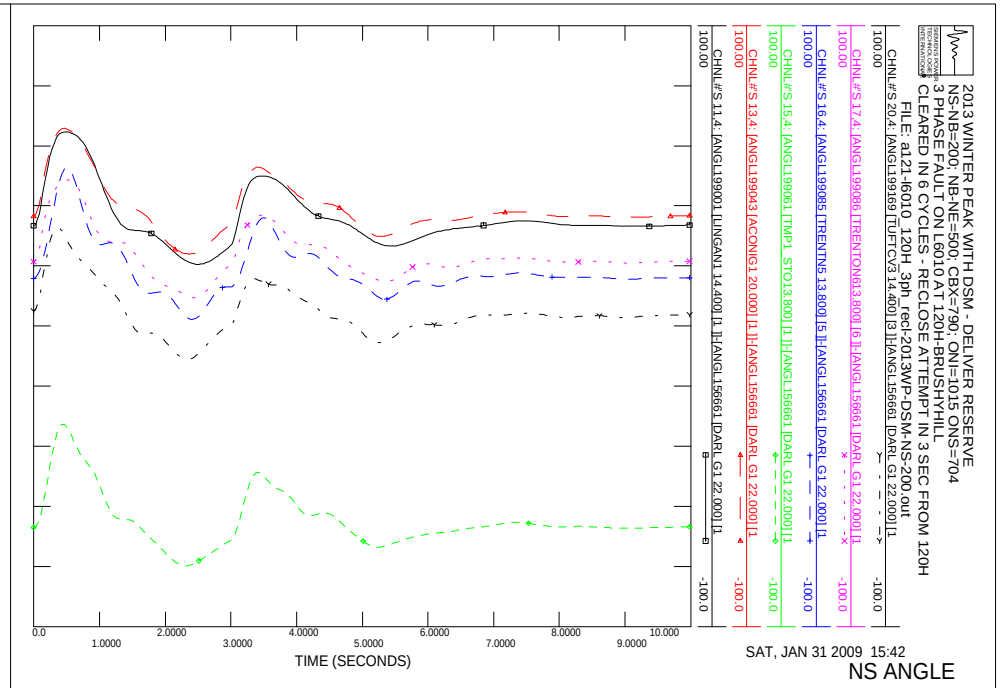
2013 WINTER PEAK WITH DSM - DELIVER RESERVE
NS-NB=200; NB-NE=500; CBX=790; ONI=1015 ONS=704
3 PHASE FAULT ON L6010 AT 120H-BRUSHYHILL
CLEARED IN 6 CYCLES - RECLOSE ATTEMPT IN 3 SEC FROM 120H
FILE: a121-l6010_120H_3ph_recl-2013WP-DSM-NS-200.out
CHNL#'S 20,4: [ANGL199169 [TUFTCV3 14.400] [3]]-[ANGL156661 [DARL G1 22.000] [1
CHNL#'S 17,4: [ANGL199086 [TRENTON613.800] [6]]-[ANGL156661 [DARL G1 22.000] [1
CHNL#'S 16,4: [ANGL199085 [TRENTN5 13.800] [5]]-[ANGL156661 [DARL G1 22.000] [1
CHNL#'S 15,4: [ANGL199061 [TMP1 STO13.800] [1]]-[ANGL156661 [DARL G1 22.000] [1
CHNL#'S 13,4: [ANGL199043 [ACONIG1 20.000] [1]]-[ANGL156661 [DARL G1 22.000] [1
CHNL#'S 11,4: [ANGL199001 [LINGAN1 14.400] [1]]-[ANGL156661 [DARL G1 22.000] [1
100.00
-100.0
TIME (SECONDS)
SAT, JAN 31 2009 15:42
NS ANGLE

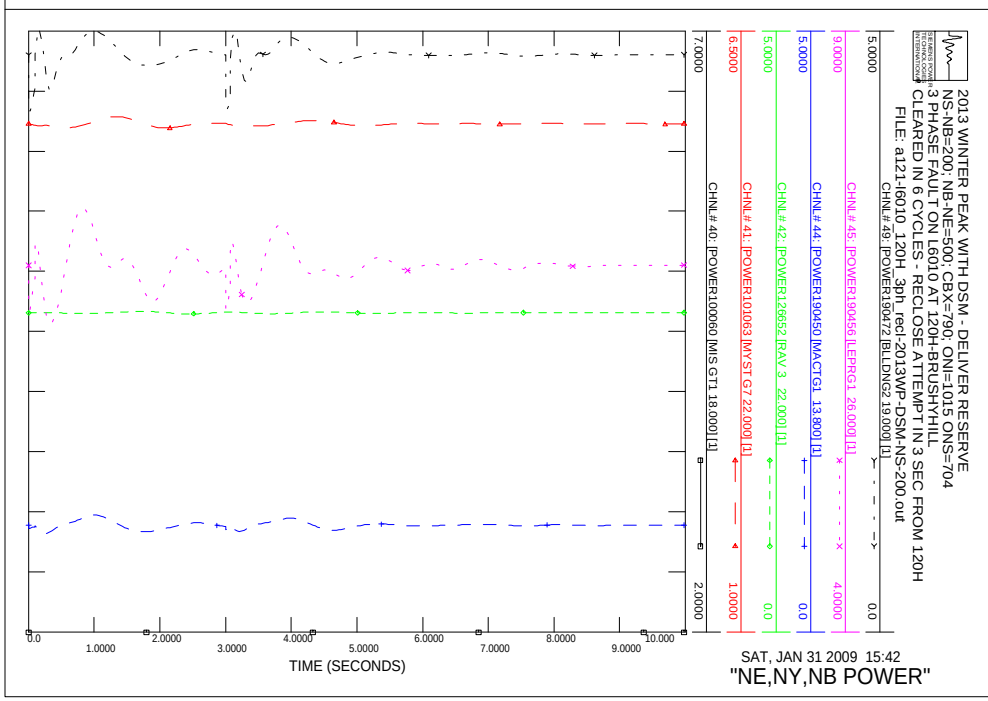
2013 WINTER PEAK WITH DSM - DELIVER RESERVE
NS-NB=200; NB-NE=500; CBX=790; ONI=1015 ONS=704
3 PHASE FAULT ON L6010 AT 120H-BRUSHYHILL
CLEARED IN 6 CYCLES - RECLOSE ATTEMPT IN 3 SEC FROM 120H
FILE: a121-l6010_120H_3ph_recl-2013WP-DSM-NS-200.out
CHNL# 49: [POWER190472 [BLLDNG2 19.000] [1]
CHNL# 45: [POWER190456 [LEPRG1 26.000] [1]
CHNL# 44: [POWER190450 [MACTG1 13.800] [1]
CHNL# 42: [POWER126652 [RAV 3 22.000] [1]
CHNL# 41: [POWER101063 [MYST G7 22.000] [1]
CHNL# 40: [POWER100060 [MIS GT1 18.000] [1]
5.0000
0.0
TIME (SECONDS)
SAT, JAN 31 2009 15:42
"NE,NY,NB POWER"

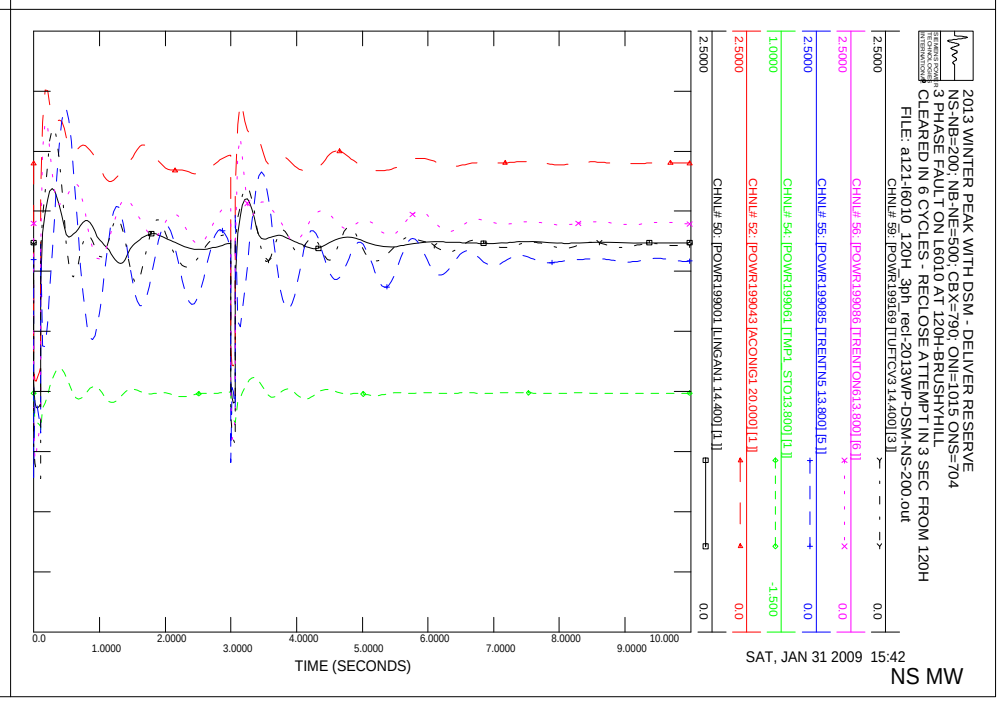
2013 WINTER PEAK WITH DSM - DELIVER RESERVE
NS-NB=200; NB-NE=500; CBX=790; ONI=1015 ONS=704
3 PHASE FAULT ON L6010 AT 120H-BRUSHYHILL
CLEARED IN 6 CYCLES - RECLOSE ATTEMPT IN 3 SEC FROM 120H
FILE: a121-l6010_120H_3ph_recl-2013WP-DSM-NS-200.out
CHNL# 59: [POWR199169 [TUFTCV3 14.400] [3]]
CHNL# 56: [POWR199086 [TRENTON613.800] [6]]
CHNL# 55: [POWR199085 [TRENTN5 13.800] [5]]
CHNL# 54: [POWR199061 [TMP1 STO13.800] [1]]
CHNL# 52: [POWR199043 [ACONIG1 20.000] [1]]
CHNL# 50: [POWR199001 [LINGAN1 14.400] [1]]
2.5000
0.0
TIME (SECONDS)
SAT, JAN 31 2009 15:42
NS MW

2013 WINTER PEAK WITH DSM - DELIVER RESERVE
NS-NB=200; NB-NE=500; CBX=790; ONI=1015 ONS=704
3 PHASE FAULT ON L6010 AT 120H-BRUSHYHILL
CLEARED IN 6 CYCLES - RECLOSE ATTEMPT IN 3 SEC FROM 120H
FILE: a121-l6010_120H_3ph_recl-2013WP-DSM-NS-200.out
CHNL# 114: [VARS IR45_AMHERST]
CHNL# 115: [VARS IR82_NUTTBY]
CHNL# 116: [VARS IR84-DALHOUSIE]
CHNL# 117: [VARS IR114-GLENDHU]
CHNL# 118: [VARS IR137-STATIA]
CHNL# 119: [VARS IR141-DIGBY]
0.50000
-0.5000
0.0
1.0000
2.0000
3.0000
4.0000
5.0000
6.0000
7.0000
8.0000
9.0000
10.000
TIME (SECONDS)
SAT, JAN 31 2009 15:42
NS WIND MV

2013 WINTER PEAK WITH DSM - DELIVER RESERVE
NS-NB=200; NB-NE=500; CBX=790; ONI=1015 ONS=704
3 PHASE FAULT ON L6010 AT 120H-BRUSHYHILL
CLEARED IN 6 CYCLES - RECLOSE ATTEMPT IN 3 SEC FROM 120H
FILE: a121-l6010_120H_3ph_recl-2013WP-DSM-NS-200.out
CHNL# 74: [POWER IR45_AMHERST]
CHNL# 75: [POWER IR82_NUTTBY]
CHNL# 76: [POWER IR84-DALHOUSIE]
CHNL# 77: [POWER IR114-GLENDHU]
CHNL# 78: [POWER IR137-STATIA]
CHNL# 79: [POWER IR141-DIGBY]
1.0000
0.0
0.0
1.0000
2.0000
3.0000
4.0000
5.0000
6.0000
7.0000
8.0000
9.0000
10.000
TIME (SECONDS)
SAT, JAN 31 2009 15:42
NS WIND MW

2013 WINTER PEAK WITH DSM - DELIVER RESERVE
NS-NB=200; NB-NE=500; CBX=790; ONI=1015 ONS=704
3 PHASE FAULT ON L6010 AT 120H-BRUSHYHILL
CLEARED IN 6 CYCLES - RECLOSE ATTEMPT IN 3 SEC FROM 120H
FILE: a121-l6010_120H_3ph_recl-2013WP-DSM-NS-200.out
CHNL# 127: [VOLT 70002 [ORRINGTN345.00]]
CHNL# 128: [VOLT190004 [KESWICK 345.00]]
CHNL# 130: [VOLT190320 [SALBRY 345.00]]
CHNL# 131: [VOLT199045 [WOODBINE345.00]]
CHNL# 132: [VOLT199120 [HOPEWELL345.00]]
CHNL# 133: [VOLT199125 [ONSLOW 345.00]]
1.1000
0.90000
1.0000
2.0000
3.0000
4.0000
5.0000
6.0000
7.0000
8.0000
9.0000
10.000
TIME (SECONDS)
SAT, JAN 31 2009 15:42
"345KV VOLTAGE"

2013 WINTER PEAK WITH DSM - DELIVER RESERVE
NS-NB=200; NB-NE=500; CBX=790; ONI=1015 ONS=704
3 PHASE FAULT ON L6010 AT 120H-BRUSHYHILL
CLEARED IN 6 CYCLES - RECLOSE ATTEMPT IN 3 SEC FROM 120H
FILE: a121-l6010_120H_3ph_recl-2013WP-DSM-NS-200.out
CHNL# 120: 60*(1+[FREQ 70002 [ORRINGTN345.00]])
CHNL# 121: 60*(1+[FREQ190197 [C.COVE 345.00]])
CHNL# 122: 60*(1+[FREQ190320 [SALBRY 345.00]])
CHNL# 123: 60*(1+[FREQ199045 [WOODBINE345.00]])
CHNL# 124: 60*(1+[FREQ199120 [HOPEWELL345.00]])
CHNL# 125: 60*(1+[FREQ199125 [ONSLOW 345.00]])
60.500
59.500
1.0000
2.0000
3.0000
4.0000
5.0000
6.0000
7.0000
8.0000
9.0000
10.000
TIME (SECONDS)
SAT, JAN 31 2009 15:42
FREQUENCY HZ

2013 WINTER PEAK WITH DSM - DELIVER RESERVE
NS-NB=200; NB-NE=500; CBX=790; ONI=1015 ONS=704
3 PHASE FAULT ON L6010 AT 120H-BRUSHYHILL
CLEARED IN 6 CYCLES - RECLOSE ATTEMPT IN 3 SEC FROM 120H
FILE: a121-l6010_120H_3ph_recl-2013WP-DSM-NS-200.out
CHNL# 146: [VOLT199280 [TUSKET A138.00]]
CHNL# 145: [VOLT199193 [HHWAS 138.00]]
CHNL# 144: [VOLT199165 [TUFTCOVE138.00]]
CHNL# 143: [VOLT199135 [SPRNGHILL138.00]]
CHNL# 142: [VOLT199090 [50N-TREN138.00]]
CHNL# 141: [VOLT199051 [HASTINGS138.00]]
1.2000
0.70000
0.0
1.0000
2.0000
3.0000
4.0000
5.0000
6.0000
7.0000
8.0000
9.0000
10.000
TIME (SECONDS)
SAT, JAN 31 2009 15:42
138KV BUS VOLTS

2013 WINTER PEAK WITH DSM - DELIVER RESERVE
NS-NB=200; NB-NE=500; CBX=790; ONI=1015 ONS=704
3 PHASE FAULT ON L6010 AT 120H-BRUSHYHILL
CLEARED IN 6 CYCLES - RECLOSE ATTEMPT IN 3 SEC FROM 120H
FILE: a121-l6010_120H_3ph_recl-2013WP-DSM-NS-200.out
CHNL# 140: [VOLT199240 [BWATER A230.00]]
CHNL# 139: [VOLT199200 [BRUSHY 230.00]]
CHNL# 138: [VOLT199130 [ONSLOW 230.00]]
CHNL# 137: [VOLT199050 [HASTINGS230.00]]
CHNL# 136: [VOLT199044 [PT.ACONI230.00]]
CHNL# 135: [VOLT199000 [LINGAN 230.00]]
1.2000
0.70000
0.0
1.0000
2.0000
3.0000
4.0000
5.0000
6.0000
7.0000
8.0000
9.0000
10.000
TIME (SECONDS)
SAT, JAN 31 2009 15:42
230KV BUS VOLTS

2013 WINTER PEAK WITH DSM - DELIVER RESERVE
NS-NB=200; NB-NE=500; CBX=790; ONI=1015 ONS=704
3 PHASE FAULT ON L6010 AT 120H-BRUSHYHILL
CLEARED IN 6 CYCLES - RECLOSE ATTEMPT IN 3 SEC FROM 120H
FILE: a121-l6010_120H_3ph_recl-2013WP-DSM-NS-200.out
CHNL# 217: [L6513MW]
CHNL# 215: [L6503MW]
CHNL# 197: [L8003MW]
CHNL# 195: [L8004MW]
CHNL# 193: [L8001MW]
CHNL# 221: [L3001MW]
250.00
500.00
1000.0
0.0
-250.0
-1000.
0.0
1.0000
2.0000
3.0000
4.0000
5.0000
6.0000
7.0000
8.0000
9.0000
10.000
TIME (SECONDS)
SAT, JAN 31 2009 15:42
LINE FLOW MW

2013 WINTER PEAK WITH DSM - DELIVER RESERVE
NS-NB=200; NB-NE=500; CBX=790; ONI=1015 ONS=704
3 PHASE FAULT ON L6010 AT 120H-BRUSHYHILL
CLEARED IN 6 CYCLES - RECLOSE ATTEMPT IN 3 SEC FROM 120H
FILE: a121-l6010_120H_3ph_recl-2013WP-DSM-NS-200.out
CHNL# 154: [IR141-DIGBYH69.0 VOLTS]
CHNL# 153: [IR137-STATIG25.0 VOLTS]
CHNL# 152: [IR114-GLENDH138.0 VOLTS]
CHNL# 151: [IR84-DALHOHV230.0 VOLTS]
CHNL# 150: [IR82_NUTBHV69.0 VOLTS]
CHNL# 149: [IR45_AMHERTP138.0 VOLTS]
1.2000
0.70000
0.0
1.0000
2.0000
3.0000
4.0000
5.0000
6.0000
7.0000
8.0000
9.0000
10.000
TIME (SECONDS)
SAT, JAN 31 2009 15:42
WIND BUS VOLTS

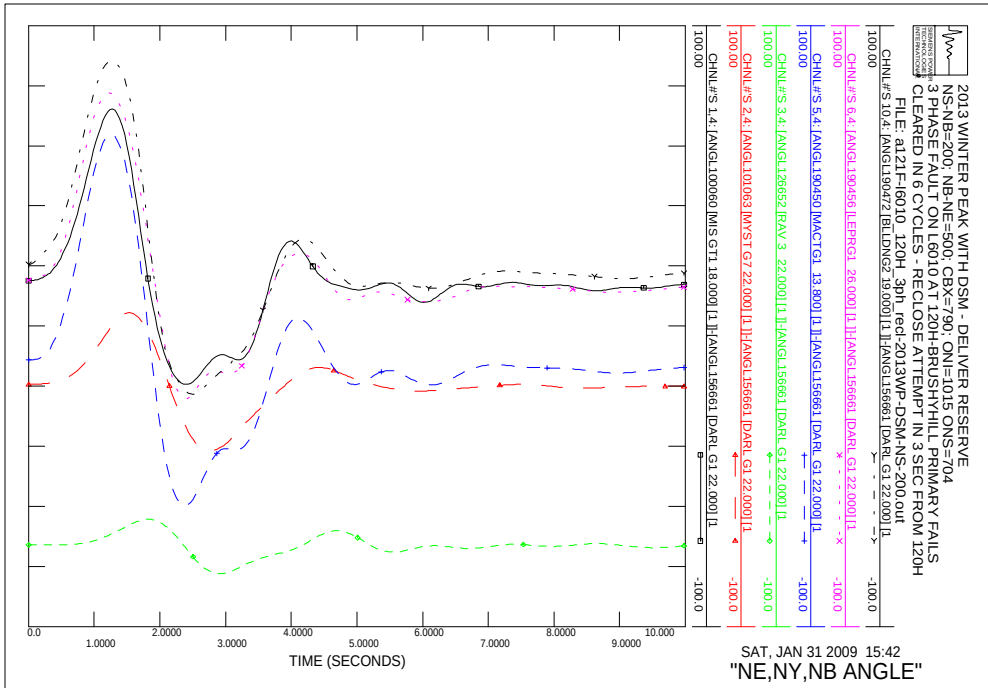
2013 WINTER PEAK WITH DSM - DELIVER RESERVE
NS-NB=200; NB-NE=500; CBX=790; ONI=1015 ONS=704
3 PHASE FAULT ON L6010 AT 120H-BRUSHYHILL PRIMARY FAILS
CLEARED IN 6 CYCLES - RECLOSE ATTEMPT IN 3 SEC FROM 120H
FILE: a121F-l6010_120H_3ph_rect-2013WP-DSM-NS-200.out
CHNL#S 10,4: [ANGL190472 [BLLDNG2 19.000] [1]]-[ANGL156661 [DARL G1 22.000] [1
CHNL#S 6,4: [ANGL190456 [LEPRG1 26.000] [1]]-[ANGL156661 [DARL G1 22.000] [1
CHNL#S 5,4: [ANGL190450 [MACTG1 13.800] [1]]-[ANGL156661 [DARL G1 22.000] [1
CHNL#S 3,4: [ANGL126652 [RAV 3 22.000] [1]]-[ANGL156661 [DARL G1 22.000] [1
CHNL#S 2,4: [ANGL101063 [MYST G7 22.000] [1]]-[ANGL156661 [DARL G1 22.000] [1
CHNL#S 1,4: [ANGL100060 [MIS GT1 18.000] [1]]-[ANGL156661 [DARL G1 22.000] [1
100.00
-100.0
TIME (SECONDS)
SAT, JAN 31 2009 15:42
"NE,NY,NB ANGLE"

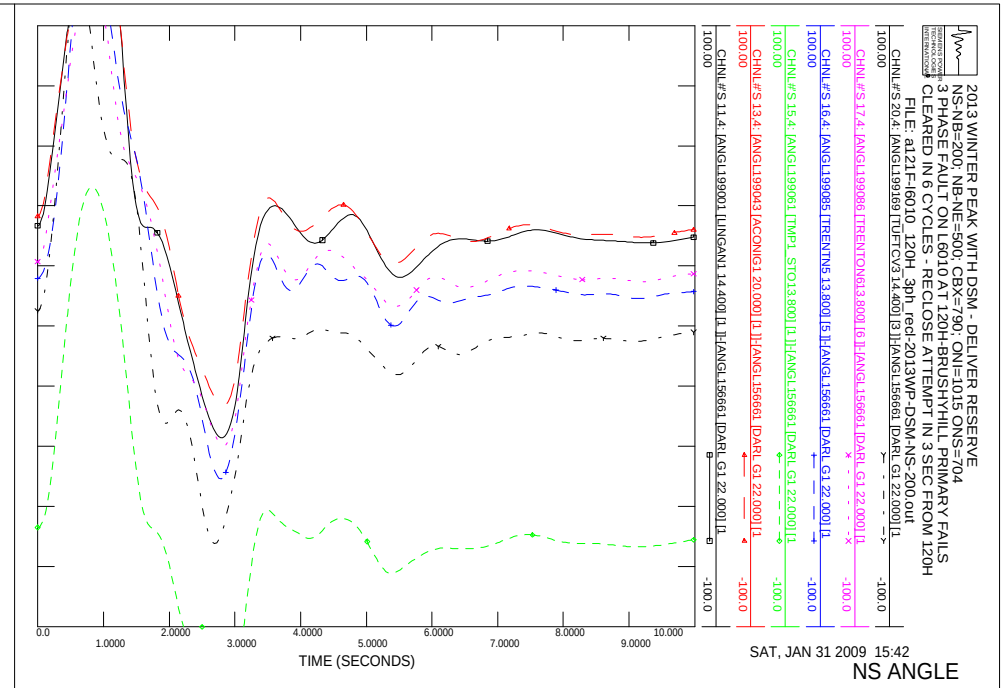
2013 WINTER PEAK WITH DSM - DELIVER RESERVE
NS-NB=200; NB-NE=500; CBX=790; ONI=1015 ONS=704
3 PHASE FAULT ON L6010 AT 120H-BRUSHYHILL PRIMARY FAILS
CLEARED IN 6 CYCLES - RECLOSE ATTEMPT IN 3 SEC FROM 120H
FILE: a121F-l6010_120H_3ph_rect-2013WP-DSM-NS-200.out
CHNL#S 20,4: [ANGL199169 [TUFTCV3 14.400] [3]]-[ANGL156661 [DARL G1 22.000] [1
CHNL#S 17,4: [ANGL199086 [TRENTON613.800] [6]]-[ANGL156661 [DARL G1 22.000] [1
CHNL#S 16,4: [ANGL199085 [TRENTN5 13.800] [5]]-[ANGL156661 [DARL G1 22.000] [1
CHNL#S 15,4: [ANGL199061 [TMP1 STO13.800] [1]]-[ANGL156661 [DARL G1 22.000] [1
CHNL#S 13,4: [ANGL199043 [ACONIG1 20.000] [1]]-[ANGL156661 [DARL G1 22.000] [1
CHNL#S 11,4: [ANGL199001 [LINGAN1 14.400] [1]]-[ANGL156661 [DARL G1 22.000] [1
100.00
-100.0
TIME (SECONDS)
SAT, JAN 31 2009 15:42
NS ANGLE

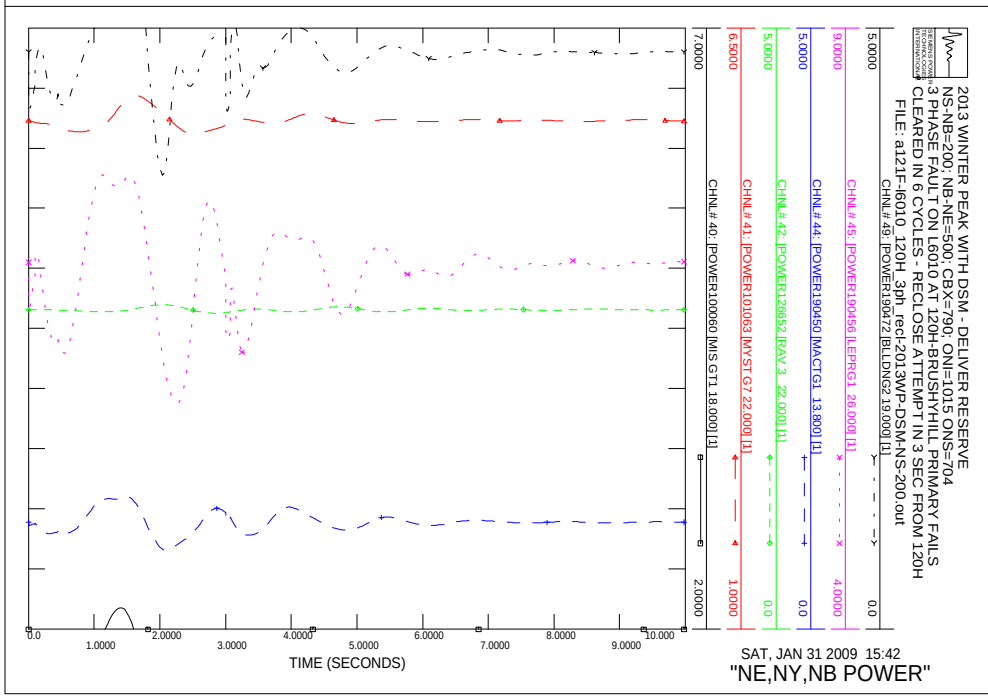
2013 WINTER PEAK WITH DSM - DELIVER RESERVE
NS-NB=200; NB-NE=500; CBX=790; ONI=1015 ONS=704
3 PHASE FAULT ON L6010 AT 120H-BRUSHYHILL PRIMARY FAILS
CLEARED IN 6 CYCLES - RECLOSE ATTEMPT IN 3 SEC FROM 120H
FILE: a121F-l6010_120H_3ph_rect-2013WP-DSM-NS-200.out
CHNL# 49: [POWER190472 [BLLDNG2 19.000] [1]
CHNL# 45: [POWER190456 [LEPRG1 26.000] [1]
CHNL# 44: [POWER190450 [MACTG1 13.800] [1]
CHNL# 42: [POWER126652 [RAV 3 22.000] [1]
CHNL# 41: [POWER101063 [MYST G7 22.000] [1]
CHNL# 40: [POWER100060 [MIS GT1 18.000] [1]
5.0000
0.0
TIME (SECONDS)
SAT, JAN 31 2009 15:42
"NE,NY,NB POWER"

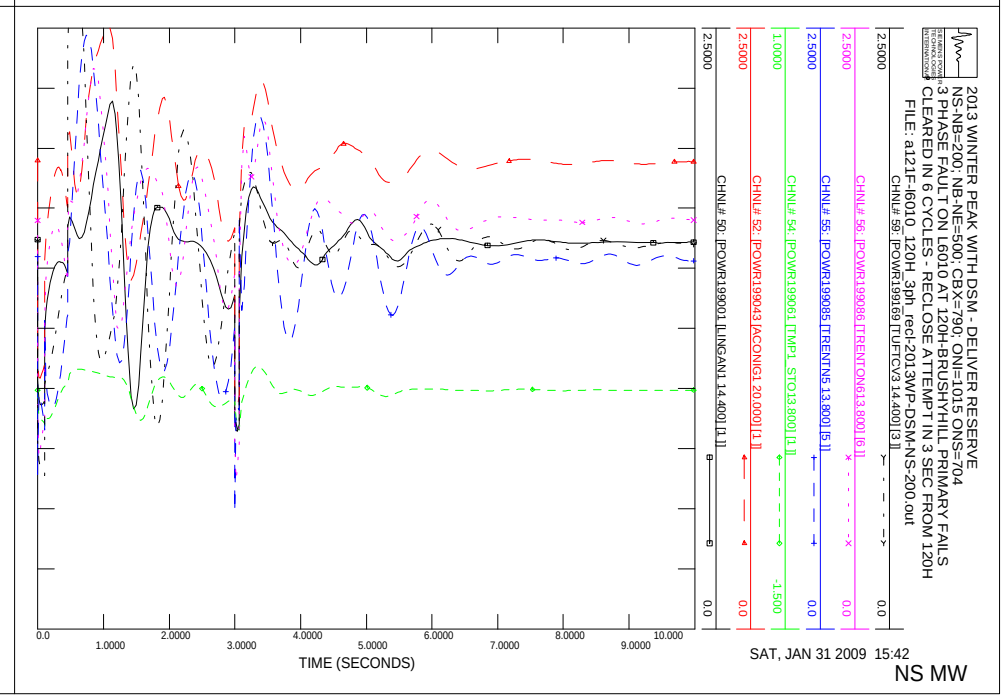
2013 WINTER PEAK WITH DSM - DELIVER RESERVE
NS-NB=200; NB-NE=500; CBX=790; ONI=1015 ONS=704
3 PHASE FAULT ON L6010 AT 120H-BRUSHYHILL PRIMARY FAILS
CLEARED IN 6 CYCLES - RECLOSE ATTEMPT IN 3 SEC FROM 120H
FILE: a121F-l6010_120H_3ph_rect-2013WP-DSM-NS-200.out
CHNL# 59: [POWR199169 [TUFTCV3 14.400] [3]]
CHNL# 56: [POWR199086 [TRENTON613.800] [6]]
CHNL# 55: [POWR199085 [TRENTN5 13.800] [5]]
CHNL# 54: [POWR199061 [TMP1 STO13.800] [1]]
CHNL# 52: [POWR199043 [ACONIG1 20.000] [1]]
CHNL# 50: [POWR199001 [LINGAN1 14.400] [1]]
2.5000
0.0
TIME (SECONDS)
SAT, JAN 31 2009 15:42
NS MW

2013 WINTER PEAK WITH DSM - DELIVER RESERVE
NS-NB=200; NB-NE=500; CBX=790; ONI=1015 ONS=704
3 PHASE FAULT ON L6010 AT 120H-BRUSHYHILL PRIMARY FAILS
CLEARED IN 6 CYCLES - RECLOSE ATTEMPT IN 3 SEC FROM 120H
FILE: a121F-l6010_120H_3ph_rect-2013WP-DSM-NS-200.out
CHNL# 114: [VARS IR45_AMHERST]
CHNL# 115: [VARS IR82_NUTTBY]
CHNL# 116: [VARS IR84-DALHOUSIE]
CHNL# 117: [VARS IR114-GLENDHU]
CHNL# 118: [VARS IR137-STATIA]
CHNL# 119: [VARS IR141-DIGBY]
TIME (SECONDS)
SAT, JAN 31 2009 15:42
NS WIND MV

2013 WINTER PEAK WITH DSM - DELIVER RESERVE
NS-NB=200; NB-NE=500; CBX=790; ONI=1015 ONS=704
3 PHASE FAULT ON L6010 AT 120H-BRUSHYHILL PRIMARY FAILS
CLEARED IN 6 CYCLES - RECLOSE ATTEMPT IN 3 SEC FROM 120H
FILE: a121F-l6010_120H_3ph_rect-2013WP-DSM-NS-200.out
CHNL# 74: [POWER IR45_AMHERST]
CHNL# 75: [POWER IR82_NUTTBY]
CHNL# 76: [POWER IR84-DALHOUSIE]
CHNL# 77: [POWER IR114-GLENDHU]
CHNL# 78: [POWER IR137-STATIA]
CHNL# 79: [POWER IR141-DIGBY]
TIME (SECONDS)
SAT, JAN 31 2009 15:42
NS WIND MW

2013 WINTER PEAK WITH DSM - DELIVER RESERVE
NS-NB=200; NB-NE=500; CBX=790; ONI=1015 ONS=704
3 PHASE FAULT ON L6010 AT 120H-BRUSHYHILL PRIMARY FAILS
CLEARED IN 6 CYCLES - RECLOSE ATTEMPT IN 3 SEC FROM 120H
FILE: a121F-l6010_120H_3ph_rect-2013WP-DSM-NS-200.out
CHNL# 127: [VOLT 70002 [ORRINGTN345.00]]
CHNL# 128: [VOLT190004 [KESWICK 345.00]]
CHNL# 130: [VOLT190320 [SALBRY 345.00]]
CHNL# 131: [VOLT199045 [WOODBINE345.00]]
CHNL# 132: [VOLT199120 [HOPEWELL345.00]]
CHNL# 133: [VOLT199125 [ONSLOW 345.00]]
TIME (SECONDS)
SAT, JAN 31 2009 15:42
"345KV VOLTAGE"

2013 WINTER PEAK WITH DSM - DELIVER RESERVE
NS-NB=200; NB-NE=500; CBX=790; ONI=1015 ONS=704
3 PHASE FAULT ON L6010 AT 120H-BRUSHYHILL PRIMARY FAILS
CLEARED IN 6 CYCLES - RECLOSE ATTEMPT IN 3 SEC FROM 120H
FILE: a121F-l6010_120H_3ph_rect-2013WP-DSM-NS-200.out
CHNL# 120: 60*(1+[FREQ 70002 [ORRINGTN345.00]])
CHNL# 121: 60*(1+[FREQ190197 [C.COVE 345.00]])
CHNL# 122: 60*(1+[FREQ190320 [SALBRY 345.00]])
CHNL# 123: 60*(1+[FREQ199045 [WOODBINE345.00]])
CHNL# 124: 60*(1+[FREQ199120 [HOPEWELL345.00]])
CHNL# 125: 60*(1+[FREQ199125 [ONSLOW 345.00]])
TIME (SECONDS)
SAT, JAN 31 2009 15:42
FREQUENCY HZ

2013 WINTER PEAK WITH DSM - DELIVER RESERVE
NS-NB=200; NB-NE=500; CBX=790; ONI=1015 ONS=704
3 PHASE FAULT ON L6010 AT 120H-BRUSHYHILL PRIMARY FAILS
CLEARED IN 6 CYCLES - RECLOSE ATTEMPT IN 3 SEC FROM 120H
FILE: a121F-l6010_120H_3ph_rect-2013WP-DSM-NS-200.out
CHNL# 145: [VOLT199193 [HWAS_138.00]]
CHNL# 144: [VOLT199165 [TUFTCOVE138.00]]
CHNL# 143: [VOLT199138 [SPRNGHIL138.00]]
CHNL# 142: [VOLT199090 [SON-TREN138.00]]
CHNL# 141: [VOLT199051 [HASTINGS138.00]]
TIME (SECONDS)
SAT, JAN 31 2009 15:42
138KV BUS VOLTS

2013 WINTER PEAK WITH DSM - DELIVER RESERVE
NS-NB=200; NB-NE=500; CBX=790; ONI=1015 ONS=704
3 PHASE FAULT ON L6010 AT 120H-BRUSHYHILL PRIMARY FAILS
CLEARED IN 6 CYCLES - RECLOSE ATTEMPT IN 3 SEC FROM 120H
FILE: a121F-l6010_120H_3ph_rect-2013WP-DSM-NS-200.out
CHNL# 139: [VOLT199200 [BRUSHY_230.00]]
CHNL# 138: [VOLT199130 [ONSLOW_230.00]]
CHNL# 137: [VOLT199050 [HASTINGS230.00]]
CHNL# 136: [VOLT199044 [PT.ACONI230.00]]
CHNL# 135: [VOLT199000 [LINGAN_230.00]]
TIME (SECONDS)
SAT, JAN 31 2009 15:42
230KV BUS VOLTS

2013 WINTER PEAK WITH DSM - DELIVER RESERVE
NS-NB=200; NB-NE=500; CBX=790; ONI=1015 ONS=704
3 PHASE FAULT ON L6010 AT 120H-BRUSHYHILL PRIMARY FAILS
CLEARED IN 6 CYCLES - RECLOSE ATTEMPT IN 3 SEC FROM 120H
FILE: a121F-l6010_120H_3ph_rect-2013WP-DSM-NS-200.out
CHNL# 217: [L6513MW]
CHNL# 215: [L6503MW]
CHNL# 197: [L8003MW]
CHNL# 195: [L8004MW]
CHNL# 193: [L8001MW]
CHNL# 221: [L3001MW]
TIME (SECONDS)
SAT, JAN 31 2009 15:42
LINE FLOW MW

2013 WINTER PEAK WITH DSM - DELIVER RESERVE
NS-NB=200; NB-NE=500; CBX=790; ONI=1015 ONS=704
3 PHASE FAULT ON L6010 AT 120H-BRUSHYHILL PRIMARY FAILS
CLEARED IN 6 CYCLES - RECLOSE ATTEMPT IN 3 SEC FROM 120H
FILE: a121F-l6010_120H_3ph_rect-2013WP-DSM-NS-200.out
CHNL# 153: [IR137-STATIG25.0 VOLTS]
CHNL# 152: [IR114-GLENDH138.0 VOLTS]
CHNL# 151: [IR84-DALHOHV230.0 VOLTS]
CHNL# 150: [IR82_NUTBHV69.0 VOLTS]
CHNL# 149: [IR45_AMHERTP138.0 VOLTS]
TIME (SECONDS)
SAT, JAN 31 2009 15:42
WIND BUS VOLTS

2013 WINTER PEAK WITH DSM - DELIVER RESERVE
NS-NB=200; NB-NE=500; CBX=790; ONI=1015 ONS=704
3 PHASE FAULT ON L6042 AT 113H-DARTEAST
CLEARED IN 6 CYCLES - RECLOSE ATTEMPT IN 5 SEC FROM 91H
FILE: a122-l6042_113H_3ph_recl-2013WP-DSM-NS-200.out
CHNL# 20: [ANGL199169 [TUFTCV3 14.400] [3]] [ANGL156661 [DARL G1 22.000] [1]]
CHNL# 17: [ANGL199086 [TRENTON613.800] [6]] [ANGL156661 [DARL G1 22.000] [1]]
CHNL# 16: [ANGL199085 [TRENTN5 13.800] [5]] [ANGL156661 [DARL G1 22.000] [1]]
CHNL# 15: [ANGL199061 [TMP1 STO13.800] [1]] [ANGL156661 [DARL G1 22.000] [1]]
CHNL# 13: [ANGL199043 [ACONIG1 20.000] [1]] [ANGL156661 [DARL G1 22.000] [1]]
CHNL# 11: [ANGL199001 [LINGAN1 14.400] [1]] [ANGL156661 [DARL G1 22.000] [1]]
100.00
-100.0
0.0
1.0000
2.0000
3.0000
4.0000
5.0000
6.0000
7.0000
8.0000
9.0000
10.000
TIME (SECONDS)
SAT, JAN 31 2009 15:42
NS ANGLE

2013 WINTER PEAK WITH DSM - DELIVER RESERVE
NS-NB=200; NB-NE=500; CBX=790; ONI=1015 ONS=704
3 PHASE FAULT ON L6042 AT 113H-DARTEAST
CLEARED IN 6 CYCLES - RECLOSE ATTEMPT IN 5 SEC FROM 91H
FILE: a122-l6042_113H_3ph_recl-2013WP-DSM-NS-200.out
CHNL# 10: [ANGL190472 [BLLDNG2 19.000] [1]] [ANGL156661 [DARL G1 22.000] [1]]
CHNL# 6: [ANGL190456 [LEPRG1 26.000] [1]] [ANGL156661 [DARL G1 22.000] [1]]
CHNL# 5: [ANGL190450 [MACTG1 13.800] [1]] [ANGL156661 [DARL G1 22.000] [1]]
CHNL# 3: [ANGL126652 [RAV 3 22.000] [1]] [ANGL156661 [DARL G1 22.000] [1]]
CHNL# 2: [ANGL101063 [MYST G7 22.000] [1]] [ANGL156661 [DARL G1 22.000] [1]]
CHNL# 1: [ANGL100060 [MIS GT1 18.000] [1]] [ANGL156661 [DARL G1 22.000] [1]]
100.00
-100.0
0.0
1.0000
2.0000
3.0000
4.0000
5.0000
6.0000
7.0000
8.0000
9.0000
10.000
TIME (SECONDS)
SAT, JAN 31 2009 15:42
"NE,NY,NB ANGLE"

2013 WINTER PEAK WITH DSM - DELIVER RESERVE
NS-NB=200; NB-NE=500; CBX=790; ONI=1015 ONS=704
3 PHASE FAULT ON L6042 AT 113H-DARTEAST
CLEARED IN 6 CYCLES - RECLOSE ATTEMPT IN 5 SEC FROM 91H
FILE: a122-l6042_113H_3ph_recl-2013WP-DSM-NS-200.out
CHNL# 59: [POWR199169 [TUFTCV3 14.400] [3]]
CHNL# 56: [POWR199086 [TRENTON613.800] [6]]
CHNL# 55: [POWR199085 [TRENTN5 13.800] [5]]
CHNL# 54: [POWR199061 [TMP1 STO13.800] [1]]
CHNL# 52: [POWR199043 [ACONIG1 20.000] [1]]
CHNL# 50: [POWR199001 [LINGAN1 14.400] [1]]
2.5000
1.0000
-1.500
0.0
0.0
1.0000
2.0000
3.0000
4.0000
5.0000
6.0000
7.0000
8.0000
9.0000
10.000
TIME (SECONDS)
SAT, JAN 31 2009 15:42
NS MW

2013 WINTER PEAK WITH DSM - DELIVER RESERVE
NS-NB=200; NB-NE=500; CBX=790; ONI=1015 ONS=704
3 PHASE FAULT ON L6042 AT 113H-DARTEAST
CLEARED IN 6 CYCLES - RECLOSE ATTEMPT IN 5 SEC FROM 91H
FILE: a122-l6042_113H_3ph_recl-2013WP-DSM-NS-200.out
CHNL# 49: [POWER190472 [BLLDNG2 19.000] [1]]
CHNL# 45: [POWER190456 [LEPRG1 26.000] [1]]
CHNL# 44: [POWER190450 [MACTG1 13.800] [1]]
CHNL# 42: [POWER126652 [RAV 3 22.000] [1]]
CHNL# 41: [POWER101063 [MYST G7 22.000] [1]]
CHNL# 40: [POWER100060 [MIS GT1 18.000] [1]]
5.0000
9.0000
4.0000
5.0000
0.0
0.0
6.5000
1.0000
7.0000
2.0000
0.0
1.0000
2.0000
3.0000
4.0000
5.0000
6.0000
7.0000
8.0000
9.0000
10.000
TIME (SECONDS)
SAT, JAN 31 2009 15:42
"NE,NY,NB POWER"

2013 WINTER PEAK WITH DSM - DELIVER RESERVE
NS-NB=200; NB-NE=500; CBX=790; ONI=1015 ONS=704
3 PHASE FAULT ON L6042 AT 113H-DARTEAST
CLEARED IN 6 CYCLES - RECLOSE ATTEMPT IN 5 SEC FROM 91H
FILE: a122-l6042_113H_3ph_recl-2013WP-DSM-NS-200.out
CHNL# 119: [VARS IR141-DIGBY]
CHNL# 118: [VARS IR137-STATIA]
CHNL# 117: [VARS IR114-GLENDHU]
CHNL# 116: [VARS IR84-DALHOUSIE]
CHNL# 115: [VARS IR82_NUTTBY]
CHNL# 114: [VARS IR45_AMHERST]
TIME (SECONDS)
SAT, JAN 31 2009 15:42
NS WIND MV

2013 WINTER PEAK WITH DSM - DELIVER RESERVE
NS-NB=200; NB-NE=500; CBX=790; ONI=1015 ONS=704
3 PHASE FAULT ON L6042 AT 113H-DARTEAST
CLEARED IN 6 CYCLES - RECLOSE ATTEMPT IN 5 SEC FROM 91H
FILE: a122-l6042_113H_3ph_recl-2013WP-DSM-NS-200.out
CHNL# 79: [POWER IR141-DIGBY]
CHNL# 78: [POWER IR137-STATIA]
CHNL# 77: [POWER IR114-GLENDHU]
CHNL# 76: [POWER IR84-DALHOUSIE]
CHNL# 75: [POWER IR82_NUTTBY]
CHNL# 74: [POWER IR45_AMHERST]
TIME (SECONDS)
SAT, JAN 31 2009 15:42
NS WIND MW

2013 WINTER PEAK WITH DSM - DELIVER RESERVE
NS-NB=200; NB-NE=500; CBX=790; ONI=1015 ONS=704
3 PHASE FAULT ON L6042 AT 113H-DARTEAST
CLEARED IN 6 CYCLES - RECLOSE ATTEMPT IN 5 SEC FROM 91H
FILE: a122-l6042_113H_3ph_recl-2013WP-DSM-NS-200.out
CHNL# 133: [VOLT199125 [ONSLOW 345.00]]
CHNL# 132: [VOLT199120 [HOPEWELL 345.00]]
CHNL# 131: [VOLT199045 [WOODBINE345.00]]
CHNL# 130: [VOLT190320 [SALBRY 345.00]]
CHNL# 128: [VOLT190004 [KESWICK 345.00]]
CHNL# 127: [VOLT 70002 [ORRINGTN345.00]]
TIME (SECONDS)
SAT, JAN 31 2009 15:42
"345KV VOLTAGE"

2013 WINTER PEAK WITH DSM - DELIVER RESERVE
NS-NB=200; NB-NE=500; CBX=790; ONI=1015 ONS=704
3 PHASE FAULT ON L6042 AT 113H-DARTEAST
CLEARED IN 6 CYCLES - RECLOSE ATTEMPT IN 5 SEC FROM 91H
FILE: a122-l6042_113H_3ph_recl-2013WP-DSM-NS-200.out
CHNL# 125: 60*(1+[FREQ199125 [ONSLOW 345.00]])
CHNL# 124: 60*(1+[FREQ199120 [HOPEWELL 345.00]])
CHNL# 123: 60*(1+[FREQ199045 [WOODBINE345.00]])
CHNL# 122: 60*(1+[FREQ190320 [SALBRY 345.00]])
CHNL# 121: 60*(1+[FREQ190197 [C.COVE 345.00]])
CHNL# 120: 60*(1+[FREQ 70002 [ORRINGTN345.00]])
TIME (SECONDS)
SAT, JAN 31 2009 15:42
FREQUENCY HZ

2013 WINTER PEAK WITH DSM - DELIVER RESERVE
NS-NB=200; NB-NE=500; CBX=790; ONI=1015 ONS=704
3 PHASE FAULT ON L6042 AT 113H-DARTEAST
CLEARED IN 6 CYCLES - RECLOSE ATTEMPT IN 5 SEC FROM 91H
FILE: a122-l6042_113H_3ph_recl-2013WP-DSM-NS-200.out
CHNL# 146: [VOLT199280 [TUSKET A138.00]]
CHNL# 145: [VOLT199193 [HHWAS 138.00]]
CHNL# 144: [VOLT199165 [TUFTCOVE138.00]]
CHNL# 143: [VOLT199138: [SPRNGHILL138.00]]
CHNL# 142: [VOLT199090 [50N-TREN138.00]]
CHNL# 141: [VOLT199051 [HASTINGS138.00]]
1.2000
0.70000
0.0
1.0000
2.0000
3.0000
4.0000
5.0000
6.0000
7.0000
8.0000
9.0000
10.000
TIME (SECONDS)
SAT, JAN 31 2009 15:42
138KV BUS VOLTS

2013 WINTER PEAK WITH DSM - DELIVER RESERVE
NS-NB=200; NB-NE=500; CBX=790; ONI=1015 ONS=704
3 PHASE FAULT ON L6042 AT 113H-DARTEAST
CLEARED IN 6 CYCLES - RECLOSE ATTEMPT IN 5 SEC FROM 91H
FILE: a122-l6042_113H_3ph_recl-2013WP-DSM-NS-200.out
CHNL# 140: [VOLT199240 [BWATER A230.00]]
CHNL# 139: [VOLT199200 [BRUSHY 230.00]]
CHNL# 138: [VOLT199130 [ONSLOW 230.00]]
CHNL# 137: [VOLT199050 [HASTINGS230.00]]
CHNL# 136: [VOLT199044 [PT.ACONI230.00]]
CHNL# 135: [VOLT199000 [LINGAN 230.00]]
1.2000
0.70000
0.0
1.0000
2.0000
3.0000
4.0000
5.0000
6.0000
7.0000
8.0000
9.0000
10.000
TIME (SECONDS)
SAT, JAN 31 2009 15:42
230KV BUS VOLTS

2013 WINTER PEAK WITH DSM - DELIVER RESERVE
NS-NB=200; NB-NE=500; CBX=790; ONI=1015 ONS=704
3 PHASE FAULT ON L6042 AT 113H-DARTEAST
CLEARED IN 6 CYCLES - RECLOSE ATTEMPT IN 5 SEC FROM 91H
FILE: a122-l6042_113H_3ph_recl-2013WP-DSM-NS-200.out
CHNL# 217: [L6533MW]
CHNL# 215: [L6503MW]
CHNL# 197: [L8003MW]
CHNL# 195: [L8004MW]
CHNL# 193: [L8001MW]
CHNL# 221: [L3001MW]
250.00
-250.0
500.00
0.0
1000.0
-1000.
TIME (SECONDS)
SAT, JAN 31 2009 15:42
LINE FLOW MW

2013 WINTER PEAK WITH DSM - DELIVER RESERVE
NS-NB=200; NB-NE=500; CBX=790; ONI=1015 ONS=704
3 PHASE FAULT ON L6042 AT 113H-DARTEAST
CLEARED IN 6 CYCLES - RECLOSE ATTEMPT IN 5 SEC FROM 91H
FILE: a122-l6042_113H_3ph_recl-2013WP-DSM-NS-200.out
CHNL# 154: [IR141-DIGBYH69.0 VOLTS]
CHNL# 153: [IR137-STATIG25.0 VOLTS]
CHNL# 152: [IR114-GLENDH138.0 VOLTS]
CHNL# 151: [IR84-DALHOHV230.0 VOLTS]
CHNL# 150: [IR82_NUTBHV69.0 VOLTS]
CHNL# 149: [IR45_AMHERTP138.0 VOLTS]
1.2000
0.70000
0.0
1.0000
2.0000
3.0000
4.0000
5.0000
6.0000
7.0000
8.0000
9.0000
10.000
TIME (SECONDS)
SAT, JAN 31 2009 15:42
WIND BUS VOLTS

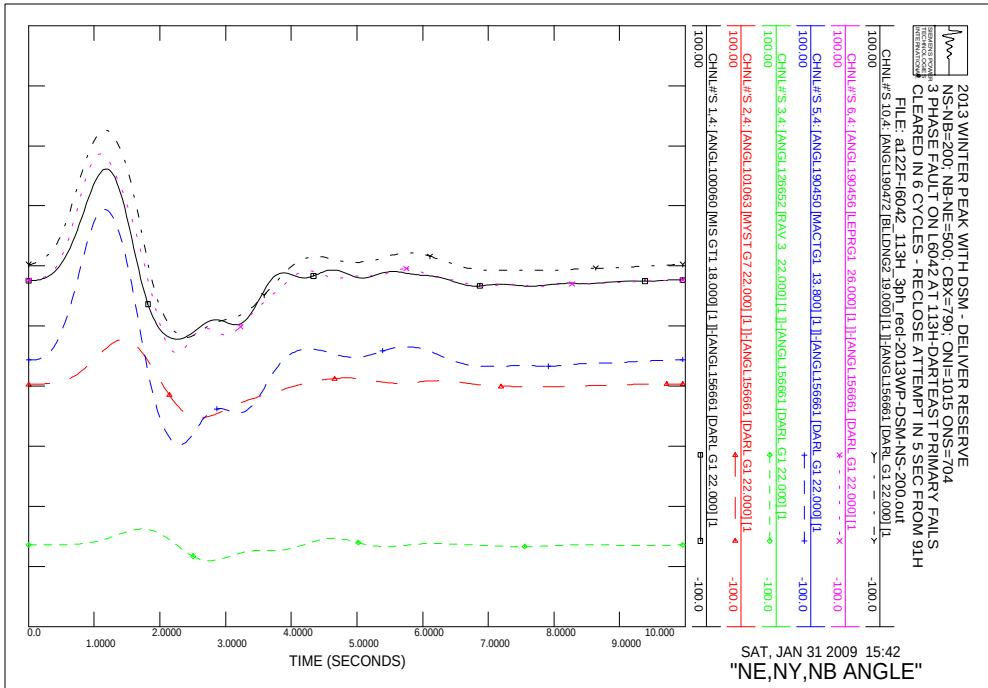
2013 WINTER PEAK WITH DSM - DELIVER RESERVE
NS-NB=200; NB-NE=500; CBX=790; ONI=1015 ONS=704
3 PHASE FAULT ON L6042 AT 113H-DARTEAST PRIMARY FAILS
CLEARED IN 6 CYCLES - RECLOSE ATTEMPT IN 5 SEC FROM 91H
FILE: a122F-l6042_113H_3ph_recl-2013WP-DSM-NS-200.out
CHNL#'S 10,4: [ANGL190472 [BLLDNG2 19.000] [1]]-[ANGL156661 [DARL G1 22.000] [1
CHNL#'S 6,4: [ANGL190456 [LEPRG1 26.000] [1]]-[ANGL156661 [DARL G1 22.000] [1
CHNL#'S 5,4: [ANGL190450 [MACTG1 13.800] [1]]-[ANGL156661 [DARL G1 22.000] [1
CHNL#'S 3,4: [ANGL126652 [RAV 3 22.000] [1]]-[ANGL156661 [DARL G1 22.000] [1
CHNL#'S 2,4: [ANGL101063 [MYST G7 22.000] [1]]-[ANGL156661 [DARL G1 22.000] [1
CHNL#'S 1,4: [ANGL100060 [MIS GT1 18.000] [1]]-[ANGL156661 [DARL G1 22.000] [1
100.00
-100.0
TIME (SECONDS)
SAT, JAN 31 2009 15:42
"NE,NY,NB ANGLE"

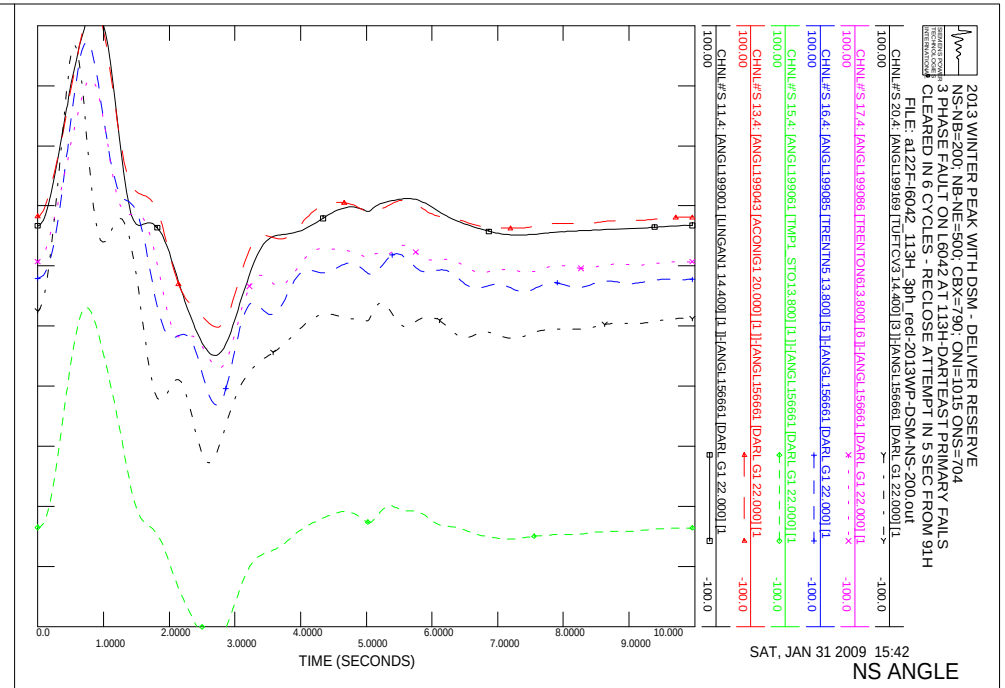
2013 WINTER PEAK WITH DSM - DELIVER RESERVE
NS-NB=200; NB-NE=500; CBX=790; ONI=1015 ONS=704
3 PHASE FAULT ON L6042 AT 113H-DARTEAST PRIMARY FAILS
CLEARED IN 6 CYCLES - RECLOSE ATTEMPT IN 5 SEC FROM 91H
FILE: a122F-l6042_113H_3ph_recl-2013WP-DSM-NS-200.out
CHNL#'S 20,4: [ANGL199169 [TUFTCV3 14.400] [3]]-[ANGL156661 [DARL G1 22.000] [1
CHNL#'S 17,4: [ANGL199086 [TRENTON613.800] [6]]-[ANGL156661 [DARL G1 22.000] [1
CHNL#'S 16,4: [ANGL199085 [TRENTN5 13.800] [5]]-[ANGL156661 [DARL G1 22.000] [1
CHNL#'S 15,4: [ANGL199061 [TMP1 STO13.800] [1]]-[ANGL156661 [DARL G1 22.000] [1
CHNL#'S 13,4: [ANGL199043 [ACONIG1 20.000] [1]]-[ANGL156661 [DARL G1 22.000] [1
CHNL#'S 11,4: [ANGL199001 [LINGAN1 14.400] [1]]-[ANGL156661 [DARL G1 22.000] [1
100.00
-100.0
TIME (SECONDS)
SAT, JAN 31 2009 15:42
NS ANGLE

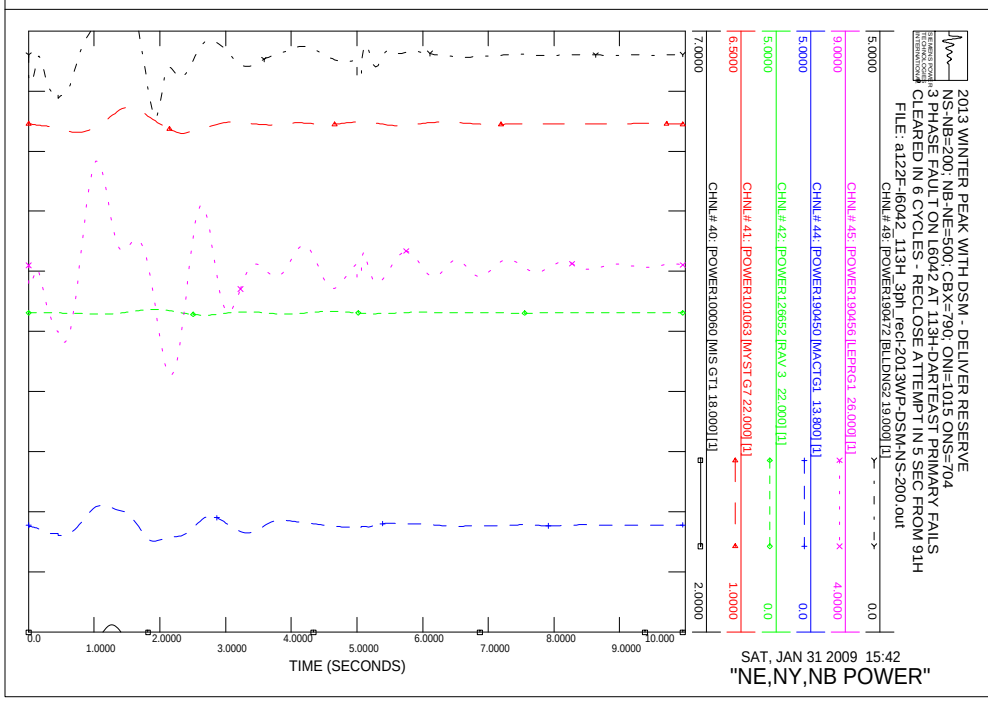
2013 WINTER PEAK WITH DSM - DELIVER RESERVE
NS-NB=200; NB-NE=500; CBX=790; ONI=1015 ONS=704
3 PHASE FAULT ON L6042 AT 113H-DARTEAST PRIMARY FAILS
CLEARED IN 6 CYCLES - RECLOSE ATTEMPT IN 5 SEC FROM 91H
FILE: a122F-l6042_113H_3ph_recl-2013WP-DSM-NS-200.out
CHNL# 49: [POWER190472 [BLLDNG2 19.000] [1]
CHNL# 45: [POWER190456 [LEPRG1 26.000] [1]
CHNL# 44: [POWER190450 [MACTG1 13.800] [1]
CHNL# 42: [POWER126652 [RAV 3 22.000] [1]
CHNL# 41: [POWER101063 [MYST G7 22.000] [1]
CHNL# 40: [POWER100060 [MIS GT1 18.000] [1]
5.0000
0.0
9.0000
4.0000
5.0000
0.0
5.0000
0.0
6.5000
1.0000
7.0000
2.0000
TIME (SECONDS)
SAT, JAN 31 2009 15:42
"NE,NY,NB POWER"

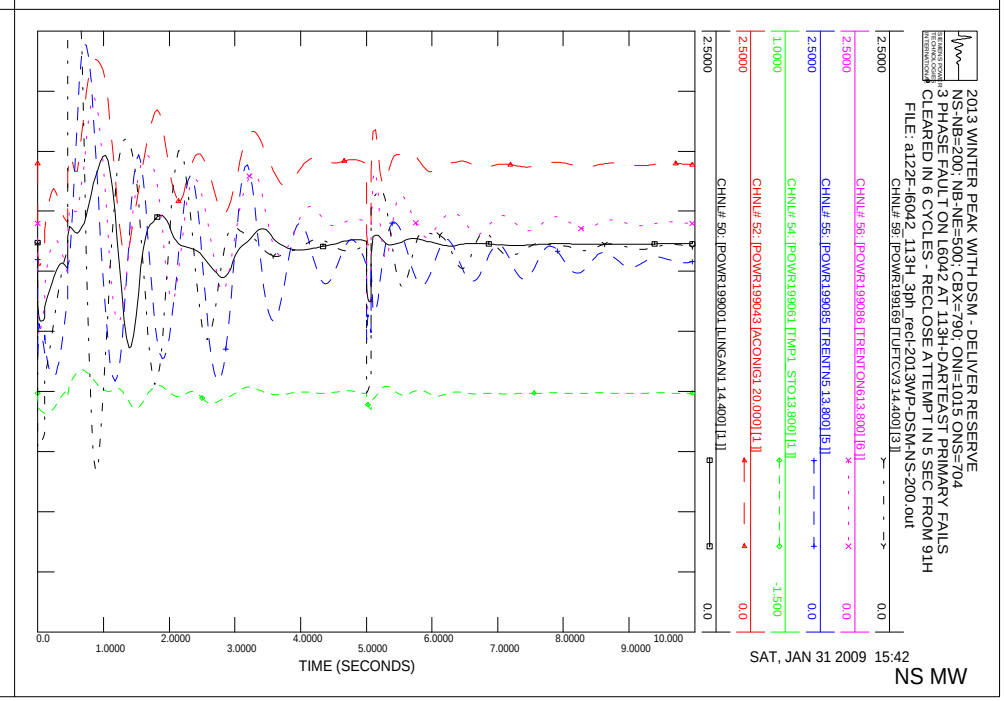
2013 WINTER PEAK WITH DSM - DELIVER RESERVE
NS-NB=200; NB-NE=500; CBX=790; ONI=1015 ONS=704
3 PHASE FAULT ON L6042 AT 113H-DARTEAST PRIMARY FAILS
CLEARED IN 6 CYCLES - RECLOSE ATTEMPT IN 5 SEC FROM 91H
FILE: a122F-l6042_113H_3ph_recl-2013WP-DSM-NS-200.out
CHNL# 59: [POWR199169 [TUFTCV3 14.400] [3]]
CHNL# 56: [POWR199086 [TRENTON613.800] [6]]
CHNL# 55: [POWR199085 [TRENTN5 13.800] [5]]
CHNL# 54: [POWR199061 [TMP1 STO13.800] [1]]
CHNL# 52: [POWR199043 [ACONIG1 20.000] [1]]
CHNL# 50: [POWR199001 [LINGAN1 14.400] [1]]
2.5000
0.0
2.5000
0.0
2.5000
0.0
1.0000
-1.500
2.5000
0.0
2.5000
0.0
TIME (SECONDS)
SAT, JAN 31 2009 15:42
NS MW

2013 WINTER PEAK WITH DSM - DELIVER RESERVE
NS-NB=200; NB-NE=500; CBX=790; ONI=1015 ONS=704
3 PHASE FAULT ON L6042 AT 113H-DARTEAST PRIMARY FAILS
CLEARED IN 6 CYCLES - RECLOSE ATTEMPT IN 5 SEC FROM 91H
FILE: a122F-l6042_113H_3ph_rect-2013WP-DSM-NS-200.out
CHNL# 119: [VARS IR141-DIGBY]
CHNL# 118: [VARS IR137-STATIA]
CHNL# 117: [VARS IR114-GLENDHU]
CHNL# 116: [VARS IR84-DALHOUSIE]
CHNL# 115: [VARS IR82_NUTTBY]
CHNL# 114: [VARS IR45_AMHERST]
TIME (SECONDS)
SAT, JAN 31 2009 15:42
NS WIND MV

2013 WINTER PEAK WITH DSM - DELIVER RESERVE
NS-NB=200; NB-NE=500; CBX=790; ONI=1015 ONS=704
3 PHASE FAULT ON L6042 AT 113H-DARTEAST PRIMARY FAILS
CLEARED IN 6 CYCLES - RECLOSE ATTEMPT IN 5 SEC FROM 91H
FILE: a122F-l6042_113H_3ph_rect-2013WP-DSM-NS-200.out
CHNL# 79: [POWER IR141-DIGBY]
CHNL# 78: [POWER IR137-STATIA]
CHNL# 77: [POWER IR114-GLENDHU]
CHNL# 76: [POWER IR84-DALHOUSIE]
CHNL# 75: [POWER IR82_NUTTBY]
CHNL# 74: [POWER IR45_AMHERST]
TIME (SECONDS)
SAT, JAN 31 2009 15:42
NS WIND MW

2013 WINTER PEAK WITH DSM - DELIVER RESERVE
NS-NB=200; NB-NE=500; CBX=790; ONI=1015 ONS=704
3 PHASE FAULT ON L6042 AT 113H-DARTEAST PRIMARY FAILS
CLEARED IN 6 CYCLES - RECLOSE ATTEMPT IN 5 SEC FROM 91H
FILE: a122F-l6042_113H_3ph_rect-2013WP-DSM-NS-200.out
CHNL# 133: [VOLT199125 [ONSLOW 345.00]]
CHNL# 132: [VOLT199120 [HOPEWELL 345.00]]
CHNL# 131: [VOLT199045 [WOODBINE345.00]]
CHNL# 130: [VOLT190320 [SALBRY 345.00]]
CHNL# 128: [VOLT190004 [KESWICK 345.00]]
CHNL# 127: [VOLT 70002 [ORRINGTN345.00]]
TIME (SECONDS)
SAT, JAN 31 2009 15:42
"345KV VOLTAGE"

2013 WINTER PEAK WITH DSM - DELIVER RESERVE
NS-NB=200; NB-NE=500; CBX=790; ONI=1015 ONS=704
3 PHASE FAULT ON L6042 AT 113H-DARTEAST PRIMARY FAILS
CLEARED IN 6 CYCLES - RECLOSE ATTEMPT IN 5 SEC FROM 91H
FILE: a122F-l6042_113H_3ph_rect-2013WP-DSM-NS-200.out
CHNL# 125: 60*(1+[FREQ199125 [ONSLOW 345.00]])
CHNL# 124: 60*(1+[FREQ199120 [HOPEWELL 345.00]])
CHNL# 123: 60*(1+[FREQ199045 [WOODBINE345.00]])
CHNL# 122: 60*(1+[FREQ190320 [SALBRY 345.00]])
CHNL# 121: 60*(1+[FREQ190197 [C.COVE 345.00]])
CHNL# 120: 60*(1+[FREQ 70002 [ORRINGTN345.00]])
TIME (SECONDS)
SAT, JAN 31 2009 15:42
FREQUENCY HZ

2013 WINTER PEAK WITH DSM - DELIVER RESERVE
NS-NB=200; NB-NE=500; CBX=790; ONI=1015 ONS=704
3 PHASE FAULT ON L6042 AT 113H-DARTEAST PRIMARY FAILS
CLEARED IN 6 CYCLES - RECLOSE ATTEMPT IN 5 SEC FROM 91H
FILE: a122F-l6042_113H_3ph_rect-2013WP-DSM-NS-200.out
CHNL# 146: [VOLT199280 [TUSKET A138.00]]
CHNL# 145: [VOLT199193 [HHWAS 138.00]]
CHNL# 144: [VOLT199165 [TUFTCOVE138.00]]
CHNL# 143: [VOLT199135 [SPRNGHILL138.00]]
CHNL# 142: [VOLT199090 [SON-TREN138.00]]
CHNL# 141: [VOLT199051 [HASTINGS138.00]]
1.2000
0.70000
0.0
1.0000
2.0000
3.0000
4.0000
5.0000
6.0000
7.0000
8.0000
9.0000
10.000
TIME (SECONDS)
SAT, JAN 31 2009 15:42
138KV BUS VOLTS

2013 WINTER PEAK WITH DSM - DELIVER RESERVE
NS-NB=200; NB-NE=500; CBX=790; ONI=1015 ONS=704
3 PHASE FAULT ON L6042 AT 113H-DARTEAST PRIMARY FAILS
CLEARED IN 6 CYCLES - RECLOSE ATTEMPT IN 5 SEC FROM 91H
FILE: a122F-l6042_113H_3ph_rect-2013WP-DSM-NS-200.out
CHNL# 140: [VOLT199240 [BWATER A230.00]]
CHNL# 139: [VOLT199200 [BRUSHY 230.00]]
CHNL# 138: [VOLT199130 [ONSLOW 230.00]]
CHNL# 137: [VOLT199050 [HASTINGS230.00]]
CHNL# 136: [VOLT199044 [PT.ACONI230.00]]
CHNL# 135: [VOLT199000 [LINGAN 230.00]]
1.2000
0.70000
0.0
1.0000
2.0000
3.0000
4.0000
5.0000
6.0000
7.0000
8.0000
9.0000
10.000
TIME (SECONDS)
SAT, JAN 31 2009 15:42
230KV BUS VOLTS

2013 WINTER PEAK WITH DSM - DELIVER RESERVE
NS-NB=200; NB-NE=500; CBX=790; ONI=1015 ONS=704
3 PHASE FAULT ON L6042 AT 113H-DARTEAST PRIMARY FAILS
CLEARED IN 6 CYCLES - RECLOSE ATTEMPT IN 5 SEC FROM 91H
FILE: a122F-l6042_113H_3ph_rect-2013WP-DSM-NS-200.out
CHNL# 217: [L6513MW]
CHNL# 215: [L6503MW]
CHNL# 197: [L8003MW]
CHNL# 195: [L8004MW]
CHNL# 193: [L8001MW]
CHNL# 221: [L3001MW]
250.00
-250.0
500.00
0.0
1000.0
-1000.
TIME (SECONDS)
SAT, JAN 31 2009 15:42
LINE FLOW MW

2013 WINTER PEAK WITH DSM - DELIVER RESERVE
NS-NB=200; NB-NE=500; CBX=790; ONI=1015 ONS=704
3 PHASE FAULT ON L6042 AT 113H-DARTEAST PRIMARY FAILS
CLEARED IN 6 CYCLES - RECLOSE ATTEMPT IN 5 SEC FROM 91H
FILE: a122F-l6042_113H_3ph_rect-2013WP-DSM-NS-200.out
CHNL# 154: [IR141-DIGBYH69.0 VOLTS]
CHNL# 153: [IR137-STATIG25.0 VOLTS]
CHNL# 152: [IR114-GLENDH138.0 VOLTS]
CHNL# 151: [IR84-DALHOHV230.0 VOLTS]
CHNL# 150: [IR82_NUTBHV69.0 VOLTS]
CHNL# 149: [IR45_AMHERTP138.0 VOLTS]
1.2000
0.70000
0.0
1.0000
2.0000
3.0000
4.0000
5.0000
6.0000
7.0000
8.0000
9.0000
10.000
TIME (SECONDS)
SAT, JAN 31 2009 15:42
WIND BUS VOLTS

2013 WINTER PEAK WITH DSM - DELIVER RESERVE
NS-NB=200; NB-NE=500; CBX=790; ONI=1015 ONS=704
FILE: b101-L6005+L6010_DCT_nrecl-2013WP-DSM-NS-200.out
CHNL# 20: [ANGL199169 [TUFTCV3 14.400] [3]] [ANGL156661 [DARL G1 22.000] [1]
CHNL# 17: [ANGL199086 [TRENTON613.800] [6]] [ANGL156661 [DARL G1 22.000] [1]
CHNL# 16: [ANGL199085 [TRENTN5 13.800] [5]] [ANGL156661 [DARL G1 22.000] [1]
CHNL# 15: [ANGL199061 [TMP1 STO13.800] [1]] [ANGL156661 [DARL G1 22.000] [1]
CHNL# 13: [ANGL199043 [ACONIG1 20.000] [1]] [ANGL156661 [DARL G1 22.000] [1]
CHNL# 11: [ANGL199001 [LINGAN1 14.400] [1]] [ANGL156661 [DARL G1 22.000] [1]
100.00
-100.0
0.0
1.0000
2.0000
3.0000
4.0000
5.0000
6.0000
7.0000
8.0000
9.0000
10.000
TIME (SECONDS)
TUE, FEB 17 2009 11:38
NS ANGLE

2013 WINTER PEAK WITH DSM - DELIVER RESERVE
NS-NB=200; NB-NE=500; CBX=790; ONI=1015 ONS=704
FILE: b101-L6005+L6010_DCT_nrecl-2013WP-DSM-NS-200.out
CHNL# 10: [ANGL190472 [BLLDNG2 19.000] [1]] [ANGL156661 [DARL G1 22.000] [1]
CHNL# 6: [ANGL190456 [LEPRG1 26.000] [1]] [ANGL156661 [DARL G1 22.000] [1]
CHNL# 5: [ANGL190450 [MACTG1 13.800] [1]] [ANGL156661 [DARL G1 22.000] [1]
CHNL# 3: [ANGL126652 [RAV 3 22.000] [1]] [ANGL156661 [DARL G1 22.000] [1]
CHNL# 2: [ANGL101063 [MYST G7 22.000] [1]] [ANGL156661 [DARL G1 22.000] [1]
CHNL# 1: [ANGL100060 [MIS GT1 18.000] [1]] [ANGL156661 [DARL G1 22.000] [1]
100.00
-100.0
0.0
1.0000
2.0000
3.0000
4.0000
5.0000
6.0000
7.0000
8.0000
9.0000
10.000
TIME (SECONDS)
TUE, FEB 17 2009 11:38
"NE,NY,NB ANGLE"

2013 WINTER PEAK WITH DSM - DELIVER RESERVE
NS-NB=200; NB-NE=500; CBX=790; ONI=1015 ONS=704
FILE: b101-L6005+L6010_DCT_nrecl-2013WP-DSM-NS-200.out
CHNL# 59: [POWER199169 [TUFTCV3 14.400] [3]]
CHNL# 56: [POWER199086 [TRENTON613.800] [6]]
CHNL# 55: [POWER199085 [TRENTN5 13.800] [5]]
CHNL# 54: [POWER199061 [TMP1 STO13.800] [1]]
CHNL# 52: [POWER199043 [ACONIG1 20.000] [1]]
CHNL# 50: [POWER199001 [LINGAN1 14.400] [1]]
2.5000
1.0000
-1.500
0.0
0.0
1.0000
2.0000
3.0000
4.0000
5.0000
6.0000
7.0000
8.0000
9.0000
10.000
TIME (SECONDS)
TUE, FEB 17 2009 11:38
NS MW

2013 WINTER PEAK WITH DSM - DELIVER RESERVE
NS-NB=200; NB-NE=500; CBX=790; ONI=1015 ONS=704
FILE: b101-L6005+L6010_DCT_nrecl-2013WP-DSM-NS-200.out
CHNL# 49: [POWER190472 [BLLDNG2 19.000] [1]]
CHNL# 45: [POWER190456 [LEPRG1 26.000] [1]]
CHNL# 44: [POWER190450 [MACTG1 13.800] [1]]
CHNL# 42: [POWER126652 [RAV 3 22.000] [1]]
CHNL# 41: [POWER101063 [MYST G7 22.000] [1]]
CHNL# 40: [POWER100060 [MIS GT1 18.000] [1]]
5.0000
9.0000
5.0000
5.0000
6.5000
7.0000
4.0000
0.0
0.0
1.0000
2.0000
3.0000
4.0000
5.0000
6.0000
7.0000
8.0000
9.0000
10.000
TIME (SECONDS)
TUE, FEB 17 2009 11:38
"NE,NY,NB POWER"

2013 WINTER PEAK WITH DSM - DELIVER RESERVE
NS-NB=200; NB-NE=500; CBX=790; ONI=1015 ONS=704
FILE: b101-L6005+L6010_DCT_nrecl-2013WP-DSM-NS-200.out
CHNL# 119: [VARS IR141-DIGBY]
CHNL# 118: [VARS IR137-STATIA]
CHNL# 117: [VARS IR114-GLENDHU]
CHNL# 116: [VARS IR84-DALHOUSIE]
CHNL# 115: [VARS IR82_NUTTBY]
CHNL# 114: [VARS IR45_AMHERST]
TIME (SECONDS)
TUE, FEB 17 2009 11:38
NS WIND MV

2013 WINTER PEAK WITH DSM - DELIVER RESERVE
NS-NB=200; NB-NE=500; CBX=790; ONI=1015 ONS=704
FILE: b101-L6005+L6010_DCT_nrecl-2013WP-DSM-NS-200.out
CHNL# 79: [POWER IR141-DIGBY]
CHNL# 78: [POWER IR137-STATIA]
CHNL# 77: [POWER IR114-GLENDHU]
CHNL# 76: [POWER IR84-DALHOUSIE]
CHNL# 75: [POWER IR82_NUTTBY]
CHNL# 74: [POWER IR45_AMHERST]
TIME (SECONDS)
TUE, FEB 17 2009 11:38
NS WIND MW

2013 WINTER PEAK WITH DSM - DELIVER RESERVE
NS-NB=200; NB-NE=500; CBX=790; ONI=1015 ONS=704
FILE: b101-L6005+L6010_DCT_nrecl-2013WP-DSM-NS-200.out
CHNL# 133: [VOLT199125 IONSLOW 345.00]
CHNL# 132: [VOLT199120 [HOPEWELL 345.00]
CHNL# 131: [VOLT199045 [WOODBINE345.00]]
CHNL# 130: [VOLT190320 [SALBRY 345.00]]
CHNL# 128: [VOLT190004 [KESWICK 345.00]]
CHNL# 127: [VOLT 70002 [ORRINGTN345.00]]
TIME (SECONDS)
TUE, FEB 17 2009 11:38
"345KV VOLTAGE"

2013 WINTER PEAK WITH DSM - DELIVER RESERVE
NS-NB=200; NB-NE=500; CBX=790; ONI=1015 ONS=704
FILE: b101-L6005+L6010_DCT_nrecl-2013WP-DSM-NS-200.out
CHNL# 125: 60*(1+[FREQ199125 [ONSLOW 345.00]])
CHNL# 124: 60*(1+[FREQ199120 [HOPEWELL 345.00]])
CHNL# 123: 60*(1+[FREQ199045 [WOODBINE345.00]])
CHNL# 122: 60*(1+[FREQ190320 [SALBRY 345.00]])
CHNL# 121: 60*(1+[FREQ190197 [C.COVE 345.00]])
CHNL# 120: 60*(1+[FREQ 70002 [ORRINGTN345.00]])
TIME (SECONDS)
TUE, FEB 17 2009 11:38
FREQUENCY HZ

2013 WINTER PEAK WITH DSM - DELIVER RESERVE
NS-NB=200; NB-NE=500; CBX=790; ONI=1015 ONS=704
FILE: b101-L6005+L6010_DCT_nrecl-2013WP-DSM-NS-200.out
CHNL# 146: [VOLT199280 [TUSKET A138.00]] 1.2000 0.70000
CHNL# 145: [VOLT199193 [HHWAS 138.00]] 1.2000 0.70000
CHNL# 144: [VOLT199165 [TUFTCOVE138.00]] 1.2000 0.70000
CHNL# 143: [VOLT199138 [SPRNGHILL138.00]] 1.2000 0.70000
CHNL# 142: [VOLT199090 [50N-TREN138.00]] 1.2000 0.70000
CHNL# 141: [VOLT199051 [HASTINGS138.00]] 1.2000 0.70000
0.0 1.0000 2.0000 3.0000 4.0000 5.0000 6.0000 7.0000 8.0000 9.0000 10.000
TIME (SECONDS)
TUE, FEB 17 2009 11:38
138KV BUS VOLTS

2013 WINTER PEAK WITH DSM - DELIVER RESERVE
NS-NB=200; NB-NE=500; CBX=790; ONI=1015 ONS=704
FILE: b101-L6005+L6010_DCT_nrecl-2013WP-DSM-NS-200.out
CHNL# 140: [VOLT199240 [BWATER A230.00]] 1.2000 0.70000
CHNL# 139: [VOLT199200 [BRUSHY 230.00]] 1.2000 0.70000
CHNL# 138: [VOLT199130 [ONSLOW 230.00]] 1.2000 0.70000
CHNL# 137: [VOLT199050 [HASTINGS230.00]] 1.2000 0.70000
CHNL# 136: [VOLT199044 [PT.ACONI230.00]] 1.2000 0.70000
CHNL# 135: [VOLT199000 [LINGAN 230.00]] 1.2000 0.70000
0.0 1.0000 2.0000 3.0000 4.0000 5.0000 6.0000 7.0000 8.0000 9.0000 10.000
TIME (SECONDS)
TUE, FEB 17 2009 11:38
230KV BUS VOLTS

2013 WINTER PEAK WITH DSM - DELIVER RESERVE
NS-NB=200; NB-NE=500; CBX=790; ONI=1015 ONS=704
FILE: b101-L6005+L6010_DCT_nrecl-2013WP-DSM-NS-200.out
CHNL# 217: [L6533MW] 250.00 -250.0
CHNL# 215: [L6503MW] 500.00 0.0
CHNL# 197: [L8003MW] 1000.0 0.0
CHNL# 195: [L8004MW] 1000.0 0.0
CHNL# 193: [L8001MW] 1000.0 -1000.
CHNL# 221: [L3001MW] 1000.0 -1000.
0.0 1.0000 2.0000 3.0000 4.0000 5.0000 6.0000 7.0000 8.0000 9.0000 10.000
TIME (SECONDS)
TUE, FEB 17 2009 11:38
LINE FLOW MW

2013 WINTER PEAK WITH DSM - DELIVER RESERVE
NS-NB=200; NB-NE=500; CBX=790; ONI=1015 ONS=704
FILE: b101-L6005+L6010_DCT_nrecl-2013WP-DSM-NS-200.out
CHNL# 154: [IR141-DIGBYH69.0 VOLTS] 1.2000 0.70000
CHNL# 153: [IR137-STATIG25.0 VOLTS] 1.2000 0.70000
CHNL# 152: [IR114-GLENDH138.0 VOLTS] 1.2000 0.70000
CHNL# 151: [IR84-DALHOHV230.0 VOLTS] 1.2000 0.70000
CHNL# 150: [IR82_NUTBHV69.0 VOLTS] 1.2000 0.70000
CHNL# 149: [IR45_AMHERTP138.0 VOLTS] 1.2000 0.70000
0.0 1.0000 2.0000 3.0000 4.0000 5.0000 6.0000 7.0000 8.0000 9.0000 10.000
TIME (SECONDS)
TUE, FEB 17 2009 11:38
WIND BUS VOLTS

2013 WINTER PEAK WITH DSM - DELIVER RESERVE
NS-NB=200; NB-NE=500; CBX=790; ONI=1015 ONS=704
1 PHASE FAULT ON DCT L6011 + L6010 AT BRUSHY 138
CLEARS FAULT IN 6 CYCLES, NO RECLOSE
FILE: b102-L6011+L6010_DCT_mrect-2013WP-DSM-NS-200.out
CHNL# 20: [ANGL199169 [TUFTCV3 14.400] [3]] [ANGL156661 [DARL G1 22.000] [1]]
CHNL# 17: [ANGL199086 [TRENTON613.800] [6]] [ANGL156661 [DARL G1 22.000] [1]]
CHNL# 16: [ANGL199085 [TRENTN5 13.800] [5]] [ANGL156661 [DARL G1 22.000] [1]]
CHNL# 15: [ANGL199061 [TMP1 STO13.800] [1]] [ANGL156661 [DARL G1 22.000] [1]]
CHNL# 13: [ANGL199043 [ACONIG1 20.000] [1]] [ANGL156661 [DARL G1 22.000] [1]]
CHNL# 11: [ANGL199001 [LINGAN1 14.400] [1]] [ANGL156661 [DARL G1 22.000] [1]]
100.00
-100.0
0.0
1.0000
2.0000
3.0000
4.0000
5.0000
6.0000
7.0000
8.0000
9.0000
10.000
TIME (SECONDS)
SAT, JAN 31 2009 15:42
NS ANGLE

2013 WINTER PEAK WITH DSM - DELIVER RESERVE
NS-NB=200; NB-NE=500; CBX=790; ONI=1015 ONS=704
1 PHASE FAULT ON DCT L6011 + L6010 AT BRUSHY 138
CLEARS FAULT IN 6 CYCLES, NO RECLOSE
FILE: b102-L6011+L6010_DCT_mrect-2013WP-DSM-NS-200.out
CHNL# 10: [ANGL190472 [BLLDNG2 19.000] [1]] [ANGL156661 [DARL G1 22.000] [1]]
CHNL# 6: [ANGL190456 [LEPRG1 26.000] [1]] [ANGL156661 [DARL G1 22.000] [1]]
CHNL# 5: [ANGL190450 [MACTG1 13.800] [1]] [ANGL156661 [DARL G1 22.000] [1]]
CHNL# 3: [ANGL126652 [RAV 3 22.000] [1]] [ANGL156661 [DARL G1 22.000] [1]]
CHNL# 2: [ANGL101063 [MYST G7 22.000] [1]] [ANGL156661 [DARL G1 22.000] [1]]
CHNL# 1: [ANGL100060 [MIS GT1 18.000] [1]] [ANGL156661 [DARL G1 22.000] [1]]
100.00
-100.0
0.0
1.0000
2.0000
3.0000
4.0000
5.0000
6.0000
7.0000
8.0000
9.0000
10.000
TIME (SECONDS)
SAT, JAN 31 2009 15:42
"NE,NY,NB ANGLE"

2013 WINTER PEAK WITH DSM - DELIVER RESERVE
NS-NB=200; NB-NE=500; CBX=790; ONI=1015 ONS=704
1 PHASE FAULT ON DCT L6011 + L6010 AT BRUSHY 138
CLEARS FAULT IN 6 CYCLES, NO RECLOSE
FILE: b102-L6011+L6010_DCT_mrect-2013WP-DSM-NS-200.out
CHNL# 59: [POWR199169 [TUFTCV3 14.400] [3]]
CHNL# 56: [POWR199086 [TRENTON613.800] [6]]
CHNL# 55: [POWR199085 [TRENTN5 13.800] [5]]
CHNL# 54: [POWR199061 [TMP1 STO13.800] [1]]
CHNL# 52: [POWR199043 [ACONIG1 20.000] [1]]
CHNL# 50: [POWR199001 [LINGAN1 14.400] [1]]
2.5000
0.0
-1.500
1.0000
2.0000
3.0000
4.0000
5.0000
6.0000
7.0000
8.0000
9.0000
10.000
TIME (SECONDS)
SAT, JAN 31 2009 15:42
NS MW

2013 WINTER PEAK WITH DSM - DELIVER RESERVE
NS-NB=200; NB-NE=500; CBX=790; ONI=1015 ONS=704
1 PHASE FAULT ON DCT L6011 + L6010 AT BRUSHY 138
CLEARS FAULT IN 6 CYCLES, NO RECLOSE
FILE: b102-L6011+L6010_DCT_mrect-2013WP-DSM-NS-200.out
CHNL# 49: [POWER190472 [BLLDNG2 19.000] [1]]
CHNL# 45: [POWER190456 [LEPRG1 26.000] [1]]
CHNL# 44: [POWER190450 [MACTG1 13.800] [1]]
CHNL# 42: [POWER126652 [RAV 3 22.000] [1]]
CHNL# 41: [POWER101063 [MYST G7 22.000] [1]]
CHNL# 40: [POWER100060 [MIS GT1 18.000] [1]]
5.0000
0.0
4.0000
1.0000
2.0000
3.0000
4.0000
5.0000
6.0000
7.0000
8.0000
9.0000
10.000
TIME (SECONDS)
SAT, JAN 31 2009 15:42
"NE,NY,NB POWER"

2013 WINTER PEAK WITH DSM - DELIVER RESERVE
NS-NB=200; NB-NE=500; CBX=790; ONI=1015 ONS=704
1 PHASE FAULT ON DCT L6011 + L6010 AT BRUSHY 138
CLEARS FAULT IN 6 CYCLES, NO RECLOSE
FILE: b102-L6011+L6010_DCT_mrect-2013WP-DSM-NS-200.out
CHNL# 119: [VARS IR141-DIGBY]
CHNL# 118: [VARS IR137-STATIA]
CHNL# 117: [VARS IR114-GLENDHU]
CHNL# 116: [VARS IR84-DALHOUSIE]
CHNL# 115: [VARS IR82_NUTTBY]
CHNL# 114: [VARS IR45_AMHERST]
0.50000
-0.5000
0.0
1.0000
2.0000
3.0000
4.0000
5.0000
6.0000
7.0000
8.0000
9.0000
10.000
TIME (SECONDS)
SAT, JAN 31 2009 15:42
NS WIND MV

2013 WINTER PEAK WITH DSM - DELIVER RESERVE
NS-NB=200; NB-NE=500; CBX=790; ONI=1015 ONS=704
1 PHASE FAULT ON DCT L6011 + L6010 AT BRUSHY 138
CLEARS FAULT IN 6 CYCLES, NO RECLOSE
FILE: b102-L6011+L6010_DCT_mrect-2013WP-DSM-NS-200.out
CHNL# 79: [POWER IR141-DIGBY]
CHNL# 78: [POWER IR137-STATIA]
CHNL# 77: [POWER IR114-GLENDHU]
CHNL# 76: [POWER IR84-DALHOUSIE]
CHNL# 75: [POWER IR82_NUTTBY]
CHNL# 74: [POWER IR45_AMHERST]
1.0000
0.0
0.0
1.0000
2.0000
3.0000
4.0000
5.0000
6.0000
7.0000
8.0000
9.0000
10.000
TIME (SECONDS)
SAT, JAN 31 2009 15:42
NS WIND MW

2013 WINTER PEAK WITH DSM - DELIVER RESERVE
NS-NB=200; NB-NE=500; CBX=790; ONI=1015 ONS=704
1 PHASE FAULT ON DCT L6011 + L6010 AT BRUSHY 138
CLEARS FAULT IN 6 CYCLES, NO RECLOSE
FILE: b102-L6011+L6010_DCT_mrect-2013WP-DSM-NS-200.out
CHNL# 133: [VOLT199125 IONSLOW 345.00]
CHNL# 132: [VOLT199120 IHOPEWELL345.00]
CHNL# 131: [VOLT199045 IWOODBINE345.00]
CHNL# 130: [VOLT190320 ISALBRY 345.00]
CHNL# 128: [VOLT190004 IKESWICK 345.00]
CHNL# 127: [VOLT 70002 IORRINGTN345.00]
1.1000
0.90000
0.0
1.0000
2.0000
3.0000
4.0000
5.0000
6.0000
7.0000
8.0000
9.0000
10.000
TIME (SECONDS)
SAT, JAN 31 2009 15:42
"345KV VOLTAGE"

2013 WINTER PEAK WITH DSM - DELIVER RESERVE
NS-NB=200; NB-NE=500; CBX=790; ONI=1015 ONS=704
1 PHASE FAULT ON DCT L6011 + L6010 AT BRUSHY 138
CLEARS FAULT IN 6 CYCLES, NO RECLOSE
FILE: b102-L6011+L6010_DCT_mrect-2013WP-DSM-NS-200.out
CHNL# 125: 60*(1+[FREQ199125 IONSLOW 345.00])
CHNL# 124: 60*(1+[FREQ199120 IHOPEWELL345.00])
CHNL# 123: 60*(1+[FREQ199045 IWOODBINE345.00])
CHNL# 122: 60*(1+[FREQ190320 ISALBRY 345.00])
CHNL# 121: 60*(1+[FREQ190197 IC.COVE 345.00])
CHNL# 120: 60*(1+[FREQ 70002 IORRINGTN345.00])
60.500
59.500
0.0
1.0000
2.0000
3.0000
4.0000
5.0000
6.0000
7.0000
8.0000
9.0000
10.000
TIME (SECONDS)
SAT, JAN 31 2009 15:42
FREQUENCY HZ

2013 WINTER PEAK WITH DSM - DELIVER RESERVE
NS-NB=200; NB-NE=500; CBX=790; ONI=1015 ONS=704
1 PHASE FAULT ON DCT L6011 + L6010 AT BRUSHY 138
CLEARS FAULT IN 6 CYCLES, NO RECLOSE
FILE: b102-L6011+L6010_DCT_mrect-2013WP-DSM-NS-200.out
CHNL# 146: [VOLT199280 [TUSKET A138.00]]
CHNL# 145: [VOLT199193 [HHWAS 138.00]]
CHNL# 144: [VOLT199165 [TUFTCOVE138.00]]
CHNL# 143: [VOLT199138: [SPRNGHLL138.00]]
CHNL# 142: [VOLT199090 [SON-TREN138.00]]
CHNL# 141: [VOLT199051 [HASTINGS138.00]]
1.2000
0.70000
0.0
1.0000
2.0000
3.0000
4.0000
5.0000
6.0000
7.0000
8.0000
9.0000
10.000
TIME (SECONDS)
SAT, JAN 31 2009 15:42
138KV BUS VOLTS

2013 WINTER PEAK WITH DSM - DELIVER RESERVE
NS-NB=200; NB-NE=500; CBX=790; ONI=1015 ONS=704
1 PHASE FAULT ON DCT L6011 + L6010 AT BRUSHY 138
CLEARS FAULT IN 6 CYCLES, NO RECLOSE
FILE: b102-L6011+L6010_DCT_mrect-2013WP-DSM-NS-200.out
CHNL# 140: [VOLT199240 [BWATER A230.00]]
CHNL# 139: [VOLT199200 [BRUSHY 230.00]]
CHNL# 138: [VOLT199130 [ONSLOW 230.00]]
CHNL# 137: [VOLT199050 [HASTINGS230.00]]
CHNL# 136: [VOLT199044 [PT.ACONI230.00]]
CHNL# 135: [VOLT199000 [LINGAN 230.00]]
1.2000
0.70000
0.0
1.0000
2.0000
3.0000
4.0000
5.0000
6.0000
7.0000
8.0000
9.0000
10.000
TIME (SECONDS)
SAT, JAN 31 2009 15:42
230KV BUS VOLTS

2013 WINTER PEAK WITH DSM - DELIVER RESERVE
NS-NB=200; NB-NE=500; CBX=790; ONI=1015 ONS=704
1 PHASE FAULT ON DCT L6011 + L6010 AT BRUSHY 138
CLEARS FAULT IN 6 CYCLES, NO RECLOSE
FILE: b102-L6011+L6010_DCT_mrect-2013WP-DSM-NS-200.out
CHNL# 217: [L6533MW]
CHNL# 215: [L6503MW]
CHNL# 197: [L8003MW]
CHNL# 195: [L8004MW]
CHNL# 193: [L8001MW]
CHNL# 221: [L3001MW]
250.00
500.00
1000.0
-250.0
0.0
-1000.
0.0
1.0000
2.0000
3.0000
4.0000
5.0000
6.0000
7.0000
8.0000
9.0000
10.000
TIME (SECONDS)
SAT, JAN 31 2009 15:42
LINE FLOW MW

2013 WINTER PEAK WITH DSM - DELIVER RESERVE
NS-NB=200; NB-NE=500; CBX=790; ONI=1015 ONS=704
1 PHASE FAULT ON DCT L6011 + L6010 AT BRUSHY 138
CLEARS FAULT IN 6 CYCLES, NO RECLOSE
FILE: b102-L6011+L6010_DCT_mrect-2013WP-DSM-NS-200.out
CHNL# 154: [IR141-DIGBYH69.0 VOLTS]
CHNL# 153: [IR137-STATIG25.0 VOLTS]
CHNL# 152: [IR114-GLENDH138.0 VOLTS]
CHNL# 151: [IR84-DALHOHV230.0 VOLTS]
CHNL# 150: [IR82-NUTBHV69.0 VOLTS]
CHNL# 149: [IR45-AMHERTP138.0 VOLTS]
1.2000
0.70000
0.0
1.0000
2.0000
3.0000
4.0000
5.0000
6.0000
7.0000
8.0000
9.0000
10.000
TIME (SECONDS)
SAT, JAN 31 2009 15:42
WIND BUS VOLTS

2013 WINTER PEAK WITH DSM - DELIVER RESERVE
NS-NB=200; NB-NE=500; CBX=790; ONI=1015 ONS=704
1 PHASE FAULT L6005/L6016 AT 120H, CLEARED IN
6 CYCLES, NO RECLOSING
FILE: b103-L6005+L6016_DCT_nrecl-2013WP-DSM-NS-200.out
CHNL# 20: [ANGL199169 [TUFTCV3 14.400] [3]] [ANGL156661 [DARL G1 22.000] [1]
CHNL# 17: [ANGL199086 [TRENTON613.800] [6]] [ANGL156661 [DARL G1 22.000] [1]
CHNL# 16: [ANGL199085 [TRENTN5 13.800] [5]] [ANGL156661 [DARL G1 22.000] [1]
CHNL# 15: [ANGL199061 [TMP1 STO13.800] [1]] [ANGL156661 [DARL G1 22.000] [1]
CHNL# 13: [ANGL199043 [ACONIG1 20.000] [1]] [ANGL156661 [DARL G1 22.000] [1]
CHNL# 11: [ANGL199001 [LINGAN1 14.400] [1]] [ANGL156661 [DARL G1 22.000] [1]
100.00
-100.0
0.0
1.0000
2.0000
3.0000
4.0000
5.0000
6.0000
7.0000
8.0000
9.0000
10.000
TIME (SECONDS)
SAT, JAN 31 2009 15:42
NS ANGLE

2013 WINTER PEAK WITH DSM - DELIVER RESERVE
NS-NB=200; NB-NE=500; CBX=790; ONI=1015 ONS=704
1 PHASE FAULT L6005/L6016 AT 120H, CLEARED IN
6 CYCLES, NO RECLOSING
FILE: b103-L6005+L6016_DCT_nrecl-2013WP-DSM-NS-200.out
CHNL# 10: [ANGL190472 [BLLDNG2 19.000] [1]] [ANGL156661 [DARL G1 22.000] [1]
CHNL# 6: [ANGL190456 [LEPRG1 26.000] [1]] [ANGL156661 [DARL G1 22.000] [1]
CHNL# 5: [ANGL190450 [MACTG1 13.800] [1]] [ANGL156661 [DARL G1 22.000] [1]
CHNL# 3: [ANGL126652 [RAV 3 22.000] [1]] [ANGL156661 [DARL G1 22.000] [1]
CHNL# 2: [ANGL101063 [MYST G7 22.000] [1]] [ANGL156661 [DARL G1 22.000] [1]
CHNL# 1: [ANGL100060 [MIS GT1 18.000] [1]] [ANGL156661 [DARL G1 22.000] [1]
100.00
-100.0
0.0
1.0000
2.0000
3.0000
4.0000
5.0000
6.0000
7.0000
8.0000
9.0000
10.000
TIME (SECONDS)
SAT, JAN 31 2009 15:42
"NE,NY,NB ANGLE"

2013 WINTER PEAK WITH DSM - DELIVER RESERVE
NS-NB=200; NB-NE=500; CBX=790; ONI=1015 ONS=704
1 PHASE FAULT L6005/L6016 AT 120H, CLEARED IN
6 CYCLES, NO RECLOSING
FILE: b103-L6005+L6016_DCT_nrecl-2013WP-DSM-NS-200.out
CHNL# 59: [POWR199169 [TUFTCV3 14.400] [3]]
CHNL# 56: [POWR199086 [TRENTON613.800] [6]]
CHNL# 55: [POWR199085 [TRENTN5 13.800] [5]]
CHNL# 54: [POWR199061 [TMP1 STO13.800] [1]]
CHNL# 52: [POWR199043 [ACONIG1 20.000] [1]]
CHNL# 50: [POWR199001 [LINGAN1 14.400] [1]]
2.5000
0.0
-1.500
1.0000
2.0000
3.0000
4.0000
5.0000
6.0000
7.0000
8.0000
9.0000
10.000
TIME (SECONDS)
SAT, JAN 31 2009 15:42
NS MW

2013 WINTER PEAK WITH DSM - DELIVER RESERVE
NS-NB=200; NB-NE=500; CBX=790; ONI=1015 ONS=704
1 PHASE FAULT L6005/L6016 AT 120H, CLEARED IN
6 CYCLES, NO RECLOSING
FILE: b103-L6005+L6016_DCT_nrecl-2013WP-DSM-NS-200.out
CHNL# 49: [POWER190472 [BLLDNG2 19.000] [1]]
CHNL# 45: [POWER190456 [LEPRG1 26.000] [1]]
CHNL# 44: [POWER190450 [MACTG1 13.800] [1]]
CHNL# 42: [POWER126652 [RAV 3 22.000] [1]]
CHNL# 41: [POWER101063 [MYST G7 22.000] [1]]
CHNL# 40: [POWER100060 [MIS GT1 18.000] [1]]
5.0000
0.0
4.0000
1.0000
2.0000
3.0000
4.0000
5.0000
6.0000
7.0000
8.0000
9.0000
10.000
TIME (SECONDS)
SAT, JAN 31 2009 15:42
"NE,NY,NB POWER"

2013 WINTER PEAK WITH DSM - DELIVER RESERVE
NS-NB=200; NB-NE=500; CBX=790; ONI=1015 ONS=704
1 PHASE FAULT L6005/L6016 AT 120H, CLEARED IN
6 CYCLES, NO RECLOSING
FILE: b103-L6005+L6016_DCT_nrecl-2013WP-DSM-NS-200.out
CHNL# 119: [VARS IR141-DIGBY]
CHNL# 118: [VARS IR137-STATIA]
CHNL# 117: [VARS IR114-GLENDHU]
CHNL# 116: [VARS IR84-DALHOUSIE]
CHNL# 115: [VARS IR82_NUTTBY]
CHNL# 114: [VARS IR45_AMHERST]
0.50000
-0.5000
0.0
1.0000
2.0000
3.0000
4.0000
5.0000
6.0000
7.0000
8.0000
9.0000
10.000
TIME (SECONDS)
SAT, JAN 31 2009 15:42
NS WIND MV

2013 WINTER PEAK WITH DSM - DELIVER RESERVE
NS-NB=200; NB-NE=500; CBX=790; ONI=1015 ONS=704
1 PHASE FAULT L6005/L6016 AT 120H, CLEARED IN
6 CYCLES, NO RECLOSING
FILE: b103-L6005+L6016_DCT_nrecl-2013WP-DSM-NS-200.out
CHNL# 79: [POWER IR141-DIGBY]
CHNL# 78: [POWER IR137-STATIA]
CHNL# 77: [POWER IR114-GLENDHU]
CHNL# 76: [POWER IR84-DALHOUSIE]
CHNL# 75: [POWER IR82_NUTTBY]
CHNL# 74: [POWER IR45_AMHERST]
1.0000
0.0
0.0
1.0000
2.0000
3.0000
4.0000
5.0000
6.0000
7.0000
8.0000
9.0000
10.000
TIME (SECONDS)
SAT, JAN 31 2009 15:42
NS WIND MW

2013 WINTER PEAK WITH DSM - DELIVER RESERVE
NS-NB=200; NB-NE=500; CBX=790; ONI=1015 ONS=704
1 PHASE FAULT L6005/L6016 AT 120H, CLEARED IN
6 CYCLES, NO RECLOSING
FILE: b103-L6005+L6016_DCT_nrecl-2013WP-DSM-NS-200.out
CHNL# 133: [VOLT199125 [ONSLOW 345.00]]
CHNL# 132: [VOLT199120 [HOPEWELL 345.00]]
CHNL# 131: [VOLT199045 [WOODBINE345.00]]
CHNL# 130: [VOLT190320 [SALBRY 345.00]]
CHNL# 128: [VOLT190004 [KESWICK 345.00]]
CHNL# 127: [VOLT 70002 [ORRINGTN345.00]]
1.1000
0.90000
0.0
1.0000
2.0000
3.0000
4.0000
5.0000
6.0000
7.0000
8.0000
9.0000
10.000
TIME (SECONDS)
SAT, JAN 31 2009 15:42
"345KV VOLTAGE"

2013 WINTER PEAK WITH DSM - DELIVER RESERVE
NS-NB=200; NB-NE=500; CBX=790; ONI=1015 ONS=704
1 PHASE FAULT L6005/L6016 AT 120H, CLEARED IN
6 CYCLES, NO RECLOSING
FILE: b103-L6005+L6016_DCT_nrecl-2013WP-DSM-NS-200.out
CHNL# 125: 60*(1+[FREQ199125 [ONSLOW 345.00]])
CHNL# 124: 60*(1+[FREQ199120 [HOPEWELL 345.00]])
CHNL# 123: 60*(1+[FREQ199045 [WOODBINE345.00]])
CHNL# 122: 60*(1+[FREQ190320 [SALBRY 345.00]])
CHNL# 121: 60*(1+[FREQ190197 [C.COVE 345.00]])
CHNL# 120: 60*(1+[FREQ 70002 [ORRINGTN345.00]])
60.500
59.500
0.0
1.0000
2.0000
3.0000
4.0000
5.0000
6.0000
7.0000
8.0000
9.0000
10.000
TIME (SECONDS)
SAT, JAN 31 2009 15:42
FREQUENCY HZ

2013 WINTER PEAK WITH DSM - DELIVER RESERVE
NS-NB=200; NB-NE=500; CBX=790; ONI=1015 ONS=704
1 PHASE FAULT L6005/L6016 AT 120H, CLEARED IN
6 CYCLES, NO RECLOSING
FILE: b103-L6005+L6016_DCT_nrecl-2013WP-DSM-NS-200.out
CHNL# 146: [VOLT199280 [TUSKET A138.00]]
CHNL# 145: [VOLT199193 [HHWAS 138.00]]
CHNL# 144: [VOLT199165 [TUFTCOVE138.00]]
CHNL# 143: [VOLT199138: [SPRNGHILL138.00]]
CHNL# 142: [VOLT199090 [SON-TREN138.00]]
CHNL# 141: [VOLT199051 [HASTINGS138.00]]
1.2000
0.70000
0.0
1.0000
2.0000
3.0000
4.0000
5.0000
6.0000
7.0000
8.0000
9.0000
10.000
TIME (SECONDS)
SAT, JAN 31 2009 15:42
138KV BUS VOLTS

2013 WINTER PEAK WITH DSM - DELIVER RESERVE
NS-NB=200; NB-NE=500; CBX=790; ONI=1015 ONS=704
1 PHASE FAULT L6005/L6016 AT 120H, CLEARED IN
6 CYCLES, NO RECLOSING
FILE: b103-L6005+L6016_DCT_nrecl-2013WP-DSM-NS-200.out
CHNL# 140: [VOLT199240 [BWATER A230.00]]
CHNL# 139: [VOLT199200 [BRUSHY 230.00]]
CHNL# 138: [VOLT199130 [ONSLOW 230.00]]
CHNL# 137: [VOLT199050 [HASTINGS230.00]]
CHNL# 136: [VOLT199044 [PT.ACONI230.00]]
CHNL# 135: [VOLT199000 [LINGAN 230.00]]
1.2000
0.70000
0.0
1.0000
2.0000
3.0000
4.0000
5.0000
6.0000
7.0000
8.0000
9.0000
10.000
TIME (SECONDS)
SAT, JAN 31 2009 15:42
230KV BUS VOLTS

2013 WINTER PEAK WITH DSM - DELIVER RESERVE
NS-NB=200; NB-NE=500; CBX=790; ONI=1015 ONS=704
1 PHASE FAULT L6005/L6016 AT 120H, CLEARED IN
6 CYCLES, NO RECLOSING
FILE: b103-L6005+L6016_DCT_nrecl-2013WP-DSM-NS-200.out
CHNL# 217: [L6533MW]
CHNL# 215: [L6503MW]
CHNL# 197: [L8003MW]
CHNL# 195: [L8004MW]
CHNL# 193: [L8001MW]
CHNL# 221: [L3001MW]
250.00
-250.0
500.00
0.0
1000.0
-1000.
0.0
1.0000
2.0000
3.0000
4.0000
5.0000
6.0000
7.0000
8.0000
9.0000
10.000
TIME (SECONDS)
SAT, JAN 31 2009 15:42
LINE FLOW MW

2013 WINTER PEAK WITH DSM - DELIVER RESERVE
NS-NB=200; NB-NE=500; CBX=790; ONI=1015 ONS=704
1 PHASE FAULT L6005/L6016 AT 120H, CLEARED IN
6 CYCLES, NO RECLOSING
FILE: b103-L6005+L6016_DCT_nrecl-2013WP-DSM-NS-200.out
CHNL# 154: [IR141-DIGBYH69.0 VOLTS]
CHNL# 153: [IR137-STATIG25.0 VOLTS]
CHNL# 152: [IR114-GLENDH138.0 VOLTS]
CHNL# 151: [IR84-DALHOHV230.0 VOLTS]
CHNL# 150: [IR82 NUTBHV69.0 VOLTS]
CHNL# 149: [IR45 AMHERTP138.0 VOLTS]
1.2000
0.70000
0.0
1.0000
2.0000
3.0000
4.0000
5.0000
6.0000
7.0000
8.0000
9.0000
10.000
TIME (SECONDS)
SAT, JAN 31 2009 15:42
WIND BUS VOLTS

2013 WINTER PEAK WITH DSM - DELIVER RESERVE
NS-NB=200; NB-NE=500; CBX=790; ONI=1015 ONS=704
1 PHASE FAULT L6003/L6009 AT 90H, CLEARED IN
6 CYCLES, NO RECLOSING
FILE: b104-L6003+L6009_DCT_nrecl-2013WP-DSM-NS-200.out
CHNL# 20: [ANGL199169 [TUFTCV3 14.400] [3]] [ANGL156661 [DARL G1 22.000] [1]
CHNL# 17: [ANGL199086 [TRENTON613.800] [6]] [ANGL156661 [DARL G1 22.000] [1]
CHNL# 16: [ANGL199085 [TRENTN5 13.800] [5]] [ANGL156661 [DARL G1 22.000] [1]
CHNL# 15: [ANGL199061 [TMP1 STO13.800] [1]] [ANGL156661 [DARL G1 22.000] [1]
CHNL# 13: [ANGL199043 [ACONIG1 20.000] [1]] [ANGL156661 [DARL G1 22.000] [1]
CHNL# 11: [ANGL199001 [LINGAN1 14.400] [1]] [ANGL156661 [DARL G1 22.000] [1]
100.00
-100.0
0.0
1.0000
2.0000
3.0000
4.0000
5.0000
6.0000
7.0000
8.0000
9.0000
10.000
TIME (SECONDS)
SAT, JAN 31 2009 15:42
NS ANGLE

2013 WINTER PEAK WITH DSM - DELIVER RESERVE
NS-NB=200; NB-NE=500; CBX=790; ONI=1015 ONS=704
1 PHASE FAULT L6003/L6009 AT 90H, CLEARED IN
6 CYCLES, NO RECLOSING
FILE: b104-L6003+L6009_DCT_nrecl-2013WP-DSM-NS-200.out
CHNL# 10: [ANGL190472 [BLLDNG2 19.000] [1]] [ANGL156661 [DARL G1 22.000] [1]
CHNL# 6: [ANGL190456 [LEPRG1 26.000] [1]] [ANGL156661 [DARL G1 22.000] [1]
CHNL# 5: [ANGL190450 [MACTG1 13.800] [1]] [ANGL156661 [DARL G1 22.000] [1]
CHNL# 3: [ANGL126652 [RAV 3 22.000] [1]] [ANGL156661 [DARL G1 22.000] [1]
CHNL# 2: [ANGL101063 [MYST G7 22.000] [1]] [ANGL156661 [DARL G1 22.000] [1]
CHNL# 1: [ANGL100060 [MIS GT1 18.000] [1]] [ANGL156661 [DARL G1 22.000] [1]
100.00
-100.0
0.0
1.0000
2.0000
3.0000
4.0000
5.0000
6.0000
7.0000
8.0000
9.0000
10.000
TIME (SECONDS)
SAT, JAN 31 2009 15:42
"NE,NY,NB ANGLE"

2013 WINTER PEAK WITH DSM - DELIVER RESERVE
NS-NB=200; NB-NE=500; CBX=790; ONI=1015 ONS=704
1 PHASE FAULT L6003/L6009 AT 90H, CLEARED IN
6 CYCLES, NO RECLOSING
FILE: b104-L6003+L6009_DCT_nrecl-2013WP-DSM-NS-200.out
CHNL# 59: [POWR199169 [TUFTCV3 14.400] [3]]
CHNL# 56: [POWR199086 [TRENTON613.800] [6]]
CHNL# 55: [POWR199085 [TRENTN5 13.800] [5]]
CHNL# 54: [POWR199061 [TMP1 STO13.800] [1]]
CHNL# 52: [POWR199043 [ACONIG1 20.000] [1]]
CHNL# 50: [POWR199001 [LINGAN1 14.400] [1]]
2.5000
1.0000
-1.500
0.0
1.0000
2.0000
3.0000
4.0000
5.0000
6.0000
7.0000
8.0000
9.0000
10.000
TIME (SECONDS)
SAT, JAN 31 2009 15:42
NS MW

2013 WINTER PEAK WITH DSM - DELIVER RESERVE
NS-NB=200; NB-NE=500; CBX=790; ONI=1015 ONS=704
1 PHASE FAULT L6003/L6009 AT 90H, CLEARED IN
6 CYCLES, NO RECLOSING
FILE: b104-L6003+L6009_DCT_nrecl-2013WP-DSM-NS-200.out
CHNL# 49: [POWER190472 [BLLDNG2 19.000] [1]]
CHNL# 45: [POWER190456 [LEPRG1 26.000] [1]]
CHNL# 44: [POWER190450 [MACTG1 13.800] [1]]
CHNL# 42: [POWER126652 [RAV 3 22.000] [1]]
CHNL# 41: [POWER101063 [MYST G7 22.000] [1]]
CHNL# 40: [POWER100060 [MIS GT1 18.000] [1]]
5.0000
9.0000
4.0000
0.0
1.0000
6.5000
7.0000
2.0000
1.0000
2.0000
3.0000
4.0000
5.0000
6.0000
7.0000
8.0000
9.0000
10.000
TIME (SECONDS)
SAT, JAN 31 2009 15:42
"NE,NY,NB POWER"

2013 WINTER PEAK WITH DSM - DELIVER RESERVE
NS-NB=200; NB-NE=500; CBX=790; ONI=1015 ONS=704
1 PHASE FAULT L6003/L6009 AT 90H, CLEARED IN
6 CYCLES, NO RECLOSING
FILE: b104-L6003+L6009_DCT_nrecl-2013WP-DSM-NS-200.out
CHNL# 119: [VARS IR141-DIGBY]
CHNL# 118: [VARS IR137-STATIA]
CHNL# 117: [VARS IR114-GLENDHU]
CHNL# 116: [VARS IR84-DALHOUSIE]
CHNL# 115: [VARS IR82_NUTTBY]
CHNL# 114: [VARS IR45_AMHERST]
0.50000
-0.5000
0.0
1.0000
2.0000
3.0000
4.0000
5.0000
6.0000
7.0000
8.0000
9.0000
10.000
TIME (SECONDS)
SAT, JAN 31 2009 15:42
NS WIND MV

2013 WINTER PEAK WITH DSM - DELIVER RESERVE
NS-NB=200; NB-NE=500; CBX=790; ONI=1015 ONS=704
1 PHASE FAULT L6003/L6009 AT 90H, CLEARED IN
6 CYCLES, NO RECLOSING
FILE: b104-L6003+L6009_DCT_nrecl-2013WP-DSM-NS-200.out
CHNL# 79: [POWER IR141-DIGBY]
CHNL# 78: [POWER IR137-STATIA]
CHNL# 77: [POWER IR114-GLENDHU]
CHNL# 76: [POWER IR84-DALHOUSIE]
CHNL# 75: [POWER IR82_NUTTBY]
CHNL# 74: [POWER IR45_AMHERST]
1.0000
0.0
0.0
1.0000
2.0000
3.0000
4.0000
5.0000
6.0000
7.0000
8.0000
9.0000
10.000
TIME (SECONDS)
SAT, JAN 31 2009 15:42
NS WIND MW

2013 WINTER PEAK WITH DSM - DELIVER RESERVE
NS-NB=200; NB-NE=500; CBX=790; ONI=1015 ONS=704
1 PHASE FAULT L6003/L6009 AT 90H, CLEARED IN
6 CYCLES, NO RECLOSING
FILE: b104-L6003+L6009_DCT_nrecl-2013WP-DSM-NS-200.out
CHNL# 133: [VOLT199125 [ONSLOW 345.00]]
CHNL# 132: [VOLT199120 [HOPEWELL 345.00]]
CHNL# 131: [VOLT199045 [WOODBINE345.00]]
CHNL# 130: [VOLT190320 [SALBRY 345.00]]
CHNL# 128: [VOLT190004 [KESWICK 345.00]]
CHNL# 127: [VOLT 70002 [ORRINGTN345.00]]
0.90000
1.0000
0.0
1.0000
2.0000
3.0000
4.0000
5.0000
6.0000
7.0000
8.0000
9.0000
10.000
TIME (SECONDS)
SAT, JAN 31 2009 15:42
"345KV VOLTAGE"

2013 WINTER PEAK WITH DSM - DELIVER RESERVE
NS-NB=200; NB-NE=500; CBX=790; ONI=1015 ONS=704
1 PHASE FAULT L6003/L6009 AT 90H, CLEARED IN
6 CYCLES, NO RECLOSING
FILE: b104-L6003+L6009_DCT_nrecl-2013WP-DSM-NS-200.out
CHNL# 125: 60*(1+[FREQ199125 [ONSLOW 345.00]])
CHNL# 124: 60*(1+[FREQ199120 [HOPEWELL 345.00]])
CHNL# 123: 60*(1+[FREQ199045 [WOODBINE345.00]])
CHNL# 122: 60*(1+[FREQ190320 [SALBRY 345.00]])
CHNL# 121: 60*(1+[FREQ190197 [C.COVE 345.00]])
CHNL# 120: 60*(1+[FREQ 70002 [ORRINGTN345.00]])
59.500
60.500
0.0
1.0000
2.0000
3.0000
4.0000
5.0000
6.0000
7.0000
8.0000
9.0000
10.000
TIME (SECONDS)
SAT, JAN 31 2009 15:42
FREQUENCY HZ

2013 WINTER PEAK WITH DSM - DELIVER RESERVE
NS-NB=200; NB-NE=500; CBX=790; ONI=1015 ONS=704
1 PHASE FAULT L6003/L6009 AT 90H, CLEARED IN
6 CYCLES, NO RECLOSING
FILE: b104-L6003+L6009_DCT_nrecl-2013WP-DSM-NS-200.out
CHNL# 146: [VOLT199280 [TUSKET A138.00]] 1.2000 0.70000
CHNL# 145: [VOLT199193 [HHWAS 138.00]] 1.2000 0.70000
CHNL# 144: [VOLT199165 [TUFTCOVE138.00]] 1.2000 0.70000
CHNL# 143: [VOLT199138 [SPRNGHILL138.00]] 1.2000 0.70000
CHNL# 142: [VOLT199090 [SON-TREN138.00]] 1.2000 0.70000
CHNL# 141: [VOLT199051 [HASTINGS138.00]] 1.2000 0.70000
0.0 1.0000 2.0000 3.0000 4.0000 5.0000 6.0000 7.0000 8.0000 9.0000 10.000
TIME (SECONDS)
SAT, JAN 31 2009 15:42
138KV BUS VOLTS

2013 WINTER PEAK WITH DSM - DELIVER RESERVE
NS-NB=200; NB-NE=500; CBX=790; ONI=1015 ONS=704
1 PHASE FAULT L6003/L6009 AT 90H, CLEARED IN
6 CYCLES, NO RECLOSING
FILE: b104-L6003+L6009_DCT_nrecl-2013WP-DSM-NS-200.out
CHNL# 140: [VOLT199240 [BWATER A230.00]] 1.2000 0.70000
CHNL# 139: [VOLT199200 [BRUSHY 230.00]] 1.2000 0.70000
CHNL# 138: [VOLT199130 [ONSLOW 230.00]] 1.2000 0.70000
CHNL# 137: [VOLT199050 [HASTINGS230.00]] 1.2000 0.70000
CHNL# 136: [VOLT199044 [PT.ACONI230.00]] 1.2000 0.70000
CHNL# 135: [VOLT199000 [LINGAN 230.00]] 1.2000 0.70000
0.0 1.0000 2.0000 3.0000 4.0000 5.0000 6.0000 7.0000 8.0000 9.0000 10.000
TIME (SECONDS)
SAT, JAN 31 2009 15:42
230KV BUS VOLTS

2013 WINTER PEAK WITH DSM - DELIVER RESERVE
NS-NB=200; NB-NE=500; CBX=790; ONI=1015 ONS=704
1 PHASE FAULT L6003/L6009 AT 90H, CLEARED IN
6 CYCLES, NO RECLOSING
FILE: b104-L6003+L6009_DCT_nrecl-2013WP-DSM-NS-200.out
CHNL# 217: [L6533MW] 250.00 -250.0
CHNL# 215: [L6503MW] 500.00 0.0
CHNL# 197: [L8003MW] 1000.0 0.0
CHNL# 195: [L8004MW] 1000.0 0.0
CHNL# 193: [L8001MW] 1000.0 -1000.
CHNL# 221: [L3001MW] 1000.0 -1000.
0.0 1.0000 2.0000 3.0000 4.0000 5.0000 6.0000 7.0000 8.0000 9.0000 10.000
TIME (SECONDS)
SAT, JAN 31 2009 15:42
LINE FLOW MW

2013 WINTER PEAK WITH DSM - DELIVER RESERVE
NS-NB=200; NB-NE=500; CBX=790; ONI=1015 ONS=704
1 PHASE FAULT L6003/L6009 AT 90H, CLEARED IN
6 CYCLES, NO RECLOSING
FILE: b104-L6003+L6009_DCT_nrecl-2013WP-DSM-NS-200.out
CHNL# 154: [IR141-DIGBYH69.0 VOLTS] 1.2000 0.70000
CHNL# 153: [IR137-STATIG25.0 VOLTS] 1.2000 0.70000
CHNL# 152: [IR114-GLENDH138.0 VOLTS] 1.2000 0.70000
CHNL# 151: [IR84-DALHOHV230.0 VOLTS] 1.2000 0.70000
CHNL# 150: [IR82-NUTBHV69.0 VOLTS] 1.2000 0.70000
CHNL# 149: [IR45-AMHERTP138.0 VOLTS] 1.2000 0.70000
0.0 1.0000 2.0000 3.0000 4.0000 5.0000 6.0000 7.0000 8.0000 9.0000 10.000
TIME (SECONDS)
SAT, JAN 31 2009 15:42
WIND BUS VOLTS

2013 WINTER PEAK WITH DSM - DELIVER RESERVE
NS-NB=200; NB-NE=500; CBX=790; ONI=1015 ONS=704
1 PHASE FAULT L6003/L6007 AT 91H, CLEARED IN 6 CY
FAULT IMPEDANCE WITH ALL GENERATION ON
FILE: b105a-L6003+L6007_DCT_nrecl-2013WP-DSM-NS-200.out
CHNL# 20: [ANGL199169 [TUFTCV3 14.400] [3]] [ANGL156661 [DARL G1 22.000] [1]]
CHNL# 17: [ANGL199086 [TRENTON613.800] [6]] [ANGL156661 [DARL G1 22.000] [1]]
CHNL# 16: [ANGL199085 [TRENTN5 13.800] [5]] [ANGL156661 [DARL G1 22.000] [1]]
CHNL# 15: [ANGL199061 [TMP1 STO13.800] [1]] [ANGL156661 [DARL G1 22.000] [1]]
CHNL# 13: [ANGL199043 [ACONIG1 20.000] [1]] [ANGL156661 [DARL G1 22.000] [1]]
CHNL# 11: [ANGL199001 [LINGAN1 14.400] [1]] [ANGL156661 [DARL G1 22.000] [1]]
100.00
-100.0
0.0
1.0000
2.0000
3.0000
4.0000
5.0000
6.0000
7.0000
8.0000
9.0000
10.000
TIME (SECONDS)
SAT, JAN 31 2009 15:42
NS ANGLE

2013 WINTER PEAK WITH DSM - DELIVER RESERVE
NS-NB=200; NB-NE=500; CBX=790; ONI=1015 ONS=704
1 PHASE FAULT L6003/L6007 AT 91H, CLEARED IN 6 CY
FAULT IMPEDANCE WITH ALL GENERATION ON
FILE: b105a-L6003+L6007_DCT_nrecl-2013WP-DSM-NS-200.out
CHNL# 10: [ANGL190472 [BLLDNG2 19.000] [1]] [ANGL156661 [DARL G1 22.000] [1]]
CHNL# 6: [ANGL190456 [LEPRG1 26.000] [1]] [ANGL156661 [DARL G1 22.000] [1]]
CHNL# 5: [ANGL190450 [MACTG1 13.800] [1]] [ANGL156661 [DARL G1 22.000] [1]]
CHNL# 3: [ANGL126652 [RAV 3 22.000] [1]] [ANGL156661 [DARL G1 22.000] [1]]
CHNL# 2: [ANGL101063 [MYST G7 22.000] [1]] [ANGL156661 [DARL G1 22.000] [1]]
CHNL# 1: [ANGL100060 [MIS GT1 18.000] [1]] [ANGL156661 [DARL G1 22.000] [1]]
100.00
-100.0
0.0
1.0000
2.0000
3.0000
4.0000
5.0000
6.0000
7.0000
8.0000
9.0000
10.000
TIME (SECONDS)
SAT, JAN 31 2009 15:42
"NE,NY,NB ANGLE"

2013 WINTER PEAK WITH DSM - DELIVER RESERVE
NS-NB=200; NB-NE=500; CBX=790; ONI=1015 ONS=704
1 PHASE FAULT L6003/L6007 AT 91H, CLEARED IN 6 CY
FAULT IMPEDANCE WITH ALL GENERATION ON
FILE: b105a-L6003+L6007_DCT_nrecl-2013WP-DSM-NS-200.out
CHNL# 59: [POWR199169 [TUFTCV3 14.400] [3]]
CHNL# 56: [POWR199086 [TRENTON613.800] [6]]
CHNL# 55: [POWR199085 [TRENTN5 13.800] [5]]
CHNL# 54: [POWR199061 [TMP1 STO13.800] [1]]
CHNL# 52: [POWR199043 [ACONIG1 20.000] [1]]
CHNL# 50: [POWR199001 [LINGAN1 14.400] [1]]
2.5000
0.0
-1.500
1.0000
2.0000
3.0000
4.0000
5.0000
6.0000
7.0000
8.0000
9.0000
10.000
TIME (SECONDS)
SAT, JAN 31 2009 15:42
NS MW

2013 WINTER PEAK WITH DSM - DELIVER RESERVE
NS-NB=200; NB-NE=500; CBX=790; ONI=1015 ONS=704
1 PHASE FAULT L6003/L6007 AT 91H, CLEARED IN 6 CY
FAULT IMPEDANCE WITH ALL GENERATION ON
FILE: b105a-L6003+L6007_DCT_nrecl-2013WP-DSM-NS-200.out
CHNL# 49: [POWER190472 [BLLDNG2 19.000] [1]]
CHNL# 45: [POWER190456 [LEPRG1 26.000] [1]]
CHNL# 44: [POWER190450 [MACTG1 13.800] [1]]
CHNL# 42: [POWER126652 [RAV 3 22.000] [1]]
CHNL# 41: [POWER101063 [MYST G7 22.000] [1]]
CHNL# 40: [POWER100060 [MIS GT1 18.000] [1]]
5.0000
0.0
4.0000
1.0000
2.0000
3.0000
4.0000
5.0000
6.0000
7.0000
8.0000
9.0000
10.000
TIME (SECONDS)
SAT, JAN 31 2009 15:42
"NE,NY,NB POWER"

NS WIND MV

NS WIND MW

"345KV VOLTAGE"

FREQUENCY HZ

2013 WINTER PEAK WITH DSM - DELIVER RESERVE
NS-NB=200; NB-NE=500; CBX=790; ONI=1015 ONS=704
1 PHASE FAULT L6003/L6007 AT 91H, CLEARED IN 6 CY
FAULT IMPEDANCE WITH ALL GENERATION ON
FILE: b105a-L6003+L6007_DCT_nrecl-2013WP-DSM-NS-200.out
CHNL# 146: [VOLT199280 [TUSKET A138.00]]
CHNL# 145: [VOLT199193 [HHWAS 138.00]]
CHNL# 144: [VOLT199165 [TUFTCOVE138.00]]
CHNL# 143: [VOLT199138: [SPRNGHILL138.00]]
CHNL# 142: [VOLT199090 [SON-TREN138.00]]
CHNL# 141: [VOLT199051 [HASTINGS138.00]]
1.2000
0.70000
0.0
1.0000
2.0000
3.0000
4.0000
5.0000
6.0000
7.0000
8.0000
9.0000
10.000
TIME (SECONDS)
SAT, JAN 31 2009 15:42
138KV BUS VOLTS

2013 WINTER PEAK WITH DSM - DELIVER RESERVE
NS-NB=200; NB-NE=500; CBX=790; ONI=1015 ONS=704
1 PHASE FAULT L6003/L6007 AT 91H, CLEARED IN 6 CY
FAULT IMPEDANCE WITH ALL GENERATION ON
FILE: b105a-L6003+L6007_DCT_nrecl-2013WP-DSM-NS-200.out
CHNL# 140: [VOLT199240 [BWATER A230.00]]
CHNL# 139: [VOLT199200 [BRUSHY 230.00]]
CHNL# 138: [VOLT199130 [ONSLOW 230.00]]
CHNL# 137: [VOLT199050 [HASTINGS230.00]]
CHNL# 136: [VOLT199044 [PT.ACONI230.00]]
CHNL# 135: [VOLT199000 [LINGAN 230.00]]
1.2000
0.70000
0.0
1.0000
2.0000
3.0000
4.0000
5.0000
6.0000
7.0000
8.0000
9.0000
10.000
TIME (SECONDS)
SAT, JAN 31 2009 15:42
230KV BUS VOLTS

2013 WINTER PEAK WITH DSM - DELIVER RESERVE
NS-NB=200; NB-NE=500; CBX=790; ONI=1015 ONS=704
1 PHASE FAULT L6003/L6007 AT 91H, CLEARED IN 6 CY
FAULT IMPEDANCE WITH ALL GENERATION ON
FILE: b105a-L6003+L6007_DCT_nrecl-2013WP-DSM-NS-200.out
CHNL# 217: [L6513(MW)]
CHNL# 215: [L6503(MV)]
CHNL# 197: [L8003(MV)]
CHNL# 195: [L8004(MV)]
CHNL# 193: [L8001(MV)]
CHNL# 221: [L3001(MV)]
250.00
-250.0
500.00
0.0
1000.0
-1000.
TIME (SECONDS)
SAT, JAN 31 2009 15:42
LINE FLOW MW

2013 WINTER PEAK WITH DSM - DELIVER RESERVE
NS-NB=200; NB-NE=500; CBX=790; ONI=1015 ONS=704
1 PHASE FAULT L6003/L6007 AT 91H, CLEARED IN 6 CY
FAULT IMPEDANCE WITH ALL GENERATION ON
FILE: b105a-L6003+L6007_DCT_nrecl-2013WP-DSM-NS-200.out
CHNL# 154: [IR141-DIGBYH69.0 VOLTS]
CHNL# 153: [IR137-STATIG25.0 VOLTS]
CHNL# 152: [IR114-GLENDH138.0 VOLTS]
CHNL# 151: [IR84-DALHOHV230.0 VOLTS]
CHNL# 150: [IR82_NUTBHV69.0 VOLTS]
CHNL# 149: [IR45_AMHERTP138.0 VOLTS]
1.2000
0.70000
0.0
1.0000
2.0000
3.0000
4.0000
5.0000
6.0000
7.0000
8.0000
9.0000
10.000
TIME (SECONDS)
SAT, JAN 31 2009 15:42
WIND BUS VOLTS

2013 WINTER PEAK WITH DSM - DELIVER RESERVE
NS-NB=200; NB-NE=500; CBX=790; ONI=1015 ONS=704
1 PHASE FAULT L6003/L6007 AT 91H, CLEARED IN 6 CY
FAULT IMPEDANCE WITH BURNSIDE GENERATION OFF
FILE: b105b-L6003+L6007_DCT_nrec1-2013WP-DSM-NS-200.out
CHNL# 20: [ANGL199169 [TUFTCV3 14.400] [3]] [ANGL156661 [DARL G1 22.000] [1]
CHNL# 17: [ANGL199086 [TRENTON613.800] [6]] [ANGL156661 [DARL G1 22.000] [1]
CHNL# 16: [ANGL199085 [TRENTN5 13.800] [5]] [ANGL156661 [DARL G1 22.000] [1]
CHNL# 15: [ANGL199061 [TMP1 STO13.800] [1]] [ANGL156661 [DARL G1 22.000] [1]
CHNL# 13: [ANGL199043 [ACONIG1 20.000] [1]] [ANGL156661 [DARL G1 22.000] [1]
CHNL# 11: [ANGL199001 [LINGAN1 14.400] [1]] [ANGL156661 [DARL G1 22.000] [1]
100.00
-100.0
0.0
1.0000
2.0000
3.0000
4.0000
5.0000
6.0000
7.0000
8.0000
9.0000
10.000
TIME (SECONDS)
SAT, JAN 31 2009 15:42
NS ANGLE

2013 WINTER PEAK WITH DSM - DELIVER RESERVE
NS-NB=200; NB-NE=500; CBX=790; ONI=1015 ONS=704
1 PHASE FAULT L6003/L6007 AT 91H, CLEARED IN 6 CY
FAULT IMPEDANCE WITH BURNSIDE GENERATION OFF
FILE: b105b-L6003+L6007_DCT_nrec1-2013WP-DSM-NS-200.out
CHNL# 10: [ANGL190472 [BLLDNG2 19.000] [1]] [ANGL156661 [DARL G1 22.000] [1]
CHNL# 6: [ANGL190456 [LEPRG1 26.000] [1]] [ANGL156661 [DARL G1 22.000] [1]
CHNL# 5: [ANGL190450 [MACTG1 13.800] [1]] [ANGL156661 [DARL G1 22.000] [1]
CHNL# 3: [ANGL126652 [RAV 3 22.000] [1]] [ANGL156661 [DARL G1 22.000] [1]
CHNL# 2: [ANGL101063 [MYST G7 22.000] [1]] [ANGL156661 [DARL G1 22.000] [1]
CHNL# 1: [ANGL100060 [MIS GT1 18.000] [1]] [ANGL156661 [DARL G1 22.000] [1]
100.00
-100.0
0.0
1.0000
2.0000
3.0000
4.0000
5.0000
6.0000
7.0000
8.0000
9.0000
10.000
TIME (SECONDS)
SAT, JAN 31 2009 15:42
"NE,NY,NB ANGLE"

2013 WINTER PEAK WITH DSM - DELIVER RESERVE
NS-NB=200; NB-NE=500; CBX=790; ONI=1015 ONS=704
1 PHASE FAULT L6003/L6007 AT 91H, CLEARED IN 6 CY
FAULT IMPEDANCE WITH BURNSIDE GENERATION OFF
FILE: b105b-L6003+L6007_DCT_nrec1-2013WP-DSM-NS-200.out
CHNL# 59: [POWR199169 [TUFTCV3 14.400] [3]]
CHNL# 56: [POWR199086 [TRENTON613.800] [6]]
CHNL# 55: [POWR199085 [TRENTN5 13.800] [5]]
CHNL# 54: [POWR199061 [TMP1 STO13.800] [1]]
CHNL# 52: [POWR199043 [ACONIG1 20.000] [1]]
CHNL# 50: [POWR199001 [LINGAN1 14.400] [1]]
2.5000
0.0
-1.500
1.0000
2.0000
3.0000
4.0000
5.0000
6.0000
7.0000
8.0000
9.0000
10.000
TIME (SECONDS)
SAT, JAN 31 2009 15:42
NS MW

2013 WINTER PEAK WITH DSM - DELIVER RESERVE
NS-NB=200; NB-NE=500; CBX=790; ONI=1015 ONS=704
1 PHASE FAULT L6003/L6007 AT 91H, CLEARED IN 6 CY
FAULT IMPEDANCE WITH BURNSIDE GENERATION OFF
FILE: b105b-L6003+L6007_DCT_nrec1-2013WP-DSM-NS-200.out
CHNL# 49: [POWER190472 [BLLDNG2 19.000] [1]]
CHNL# 45: [POWER190456 [LEPRG1 26.000] [1]]
CHNL# 44: [POWER190450 [MACTG1 13.800] [1]]
CHNL# 42: [POWER126652 [RAV 3 22.000] [1]]
CHNL# 41: [POWER101063 [MYST G7 22.000] [1]]
CHNL# 40: [POWER100060 [MIS GT1 18.000] [1]]
5.0000
0.0
4.0000
1.0000
2.0000
3.0000
4.0000
5.0000
6.0000
7.0000
8.0000
9.0000
10.000
TIME (SECONDS)
SAT, JAN 31 2009 15:42
"NE,NY,NB POWER"

2013 WINTER PEAK WITH DSM - DELIVER RESERVE
NS-NB=200; NB-NE=500; CBX=790; ONI=1015 ONS=704
1 PHASE FAULT L6003/L6007 AT 91H, CLEARED IN 6 CY
FAULT IMPEDANCE WITH BURNSIDE GENERATION OFF
FILE: b105b-L6003+L6007_DCT_nrec1-2013WP-DSM-NS-200.out
CHNL# 119: [VARS IR141-DIGBY]
CHNL# 118: [VARS IR137-STATIA]
CHNL# 117: [VARS IR114-GLENDHU]
CHNL# 116: [VARS IR84-DALHOUSIE]
CHNL# 115: [VARS IR82_NUTTBY]
CHNL# 114: [VARS IR45_AMHERST]
TIME (SECONDS)
SAT, JAN 31 2009 15:42
NS WIND MV

2013 WINTER PEAK WITH DSM - DELIVER RESERVE
NS-NB=200; NB-NE=500; CBX=790; ONI=1015 ONS=704
1 PHASE FAULT L6003/L6007 AT 91H, CLEARED IN 6 CY
FAULT IMPEDANCE WITH BURNSIDE GENERATION OFF
FILE: b105b-L6003+L6007_DCT_nrec1-2013WP-DSM-NS-200.out
CHNL# 79: [POWER IR141-DIGBY]
CHNL# 78: [POWER IR137-STATIA]
CHNL# 77: [POWER IR114-GLENDHU]
CHNL# 76: [POWER IR84-DALHOUSIE]
CHNL# 75: [POWER IR82_NUTTBY]
CHNL# 74: [POWER IR45_AMHERST]
TIME (SECONDS)
SAT, JAN 31 2009 15:42
NS WIND MW

2013 WINTER PEAK WITH DSM - DELIVER RESERVE
NS-NB=200; NB-NE=500; CBX=790; ONI=1015 ONS=704
1 PHASE FAULT L6003/L6007 AT 91H, CLEARED IN 6 CY
FAULT IMPEDANCE WITH BURNSIDE GENERATION OFF
FILE: b105b-L6003+L6007_DCT_nrec1-2013WP-DSM-NS-200.out
CHNL# 133: [VOLT199125 [ONSLOW 345.00]]
CHNL# 132: [VOLT199120 [HOPEWELL 345.00]]
CHNL# 131: [VOLT199045 [WOODBINE345.00]]
CHNL# 130: [VOLT190320 [SALBRY 345.00]]
CHNL# 128: [VOLT190004 [KESWICK 345.00]]
CHNL# 127: [VOLT 70002 [ORRINGTN345.00]]
TIME (SECONDS)
SAT, JAN 31 2009 15:42
"345KV VOLTAGE"

2013 WINTER PEAK WITH DSM - DELIVER RESERVE
NS-NB=200; NB-NE=500; CBX=790; ONI=1015 ONS=704
1 PHASE FAULT L6003/L6007 AT 91H, CLEARED IN 6 CY
FAULT IMPEDANCE WITH BURNSIDE GENERATION OFF
FILE: b105b-L6003+L6007_DCT_nrec1-2013WP-DSM-NS-200.out
CHNL# 125: 60*(1+[FREQ199125 [ONSLOW 345.00]])
CHNL# 124: 60*(1+[FREQ199120 [HOPEWELL 345.00]])
CHNL# 123: 60*(1+[FREQ199045 [WOODBINE345.00]])
CHNL# 122: 60*(1+[FREQ190320 [SALBRY 345.00]])
CHNL# 121: 60*(1+[FREQ190197 [C.COVE 345.00]])
CHNL# 120: 60*(1+[FREQ 70002 [ORRINGTN345.00]])
TIME (SECONDS)
SAT, JAN 31 2009 15:42
FREQUENCY HZ

2013 WINTER PEAK WITH DSM - DELIVER RESERVE
NS-NB=200; NB-NE=500; CBX=790; ONI=1015 ONS=704
1 PHASE FAULT L6003/L6007 AT 91H, CLEARED IN 6 CY
FAULT IMPEDANCE WITH BURNSIDE GENERATION OFF
FILE: b105b-L6003+L6007_DCT_nrecl-2013WP-DSM-NS-200.out
CHNL# 146: [VOLT199280 [TUSKET A138.00]]
CHNL# 145: [VOLT199193 [HHWAS 138.00]]
CHNL# 144: [VOLT199165 [TUFTCOVE138.00]]
CHNL# 143: [VOLT199138: [SPRNGHILL138.00]]
CHNL# 142: [VOLT199090 [SON-TREN138.00]]
CHNL# 141: [VOLT199051 [HASTINGS138.00]]
1.2000
0.70000
0.0
1.0000
2.0000
3.0000
4.0000
5.0000
6.0000
7.0000
8.0000
9.0000
10.000
TIME (SECONDS)
SAT, JAN 31 2009 15:42
138KV BUS VOLTS

2013 WINTER PEAK WITH DSM - DELIVER RESERVE
NS-NB=200; NB-NE=500; CBX=790; ONI=1015 ONS=704
1 PHASE FAULT L6003/L6007 AT 91H, CLEARED IN 6 CY
FAULT IMPEDANCE WITH BURNSIDE GENERATION OFF
FILE: b105b-L6003+L6007_DCT_nrecl-2013WP-DSM-NS-200.out
CHNL# 140: [VOLT199240 [BWATER A230.00]]
CHNL# 139: [VOLT199200 [BRUSHY 230.00]]
CHNL# 138: [VOLT199130 [ONSLOW 230.00]]
CHNL# 137: [VOLT199050 [HASTINGS230.00]]
CHNL# 136: [VOLT199044 [PT.ACONI230.00]]
CHNL# 135: [VOLT199000 [LINGAN 230.00]]
1.2000
0.70000
0.0
1.0000
2.0000
3.0000
4.0000
5.0000
6.0000
7.0000
8.0000
9.0000
10.000
TIME (SECONDS)
SAT, JAN 31 2009 15:42
230KV BUS VOLTS

2013 WINTER PEAK WITH DSM - DELIVER RESERVE
NS-NB=200; NB-NE=500; CBX=790; ONI=1015 ONS=704
1 PHASE FAULT L6003/L6007 AT 91H, CLEARED IN 6 CY
FAULT IMPEDANCE WITH BURNSIDE GENERATION OFF
FILE: b105b-L6003+L6007_DCT_nrecl-2013WP-DSM-NS-200.out
CHNL# 217: [L6513MW]
CHNL# 215: [L6503MW]
CHNL# 197: [L8003MW]
CHNL# 195: [L8004MW]
CHNL# 193: [L8001MW]
CHNL# 221: [L3001MW]
250.00
500.00
1000.0
-250.0
0.0
-1000.
0.0
1.0000
2.0000
3.0000
4.0000
5.0000
6.0000
7.0000
8.0000
9.0000
10.000
TIME (SECONDS)
SAT, JAN 31 2009 15:42
LINE FLOW MW

2013 WINTER PEAK WITH DSM - DELIVER RESERVE
NS-NB=200; NB-NE=500; CBX=790; ONI=1015 ONS=704
1 PHASE FAULT L6003/L6007 AT 91H, CLEARED IN 6 CY
FAULT IMPEDANCE WITH BURNSIDE GENERATION OFF
FILE: b105b-L6003+L6007_DCT_nrecl-2013WP-DSM-NS-200.out
CHNL# 154: [IR141-DIGBYH69.0 VOLTS]
CHNL# 153: [IR137-STATIG25.0 VOLTS]
CHNL# 152: [IR114-GLENDH138.0 VOLTS]
CHNL# 151: [IR84-DALHOHV230.0 VOLTS]
CHNL# 150: [IR82_NUTBHV69.0 VOLTS]
CHNL# 149: [IR45_AMHERTP138.0 VOLTS]
1.2000
0.70000
0.0
1.0000
2.0000
3.0000
4.0000
5.0000
6.0000
7.0000
8.0000
9.0000
10.000
TIME (SECONDS)
SAT, JAN 31 2009 15:42
WIND BUS VOLTS

2013 WINTER PEAK WITH DSM - DELIVER RESERVE
NS-NB=200; NB-NE=500; CBX=790; ONI=1015 ONS=704
1 PHASE FAULT L6003/L6007 AT 91H, CLEARED IN 6 CY
FAULT IMPEDANCE WITH BURNSIDE AND TC 1+2 OFF
FILE: b105c-L6003+L6007_DCT_nrec1-2013WP-DSM-NS-200.out
CHNL# 20: [ANGL199169 [TUFTCV3 14.400] [3]] [ANGL156661 [DARL G1 22.000] [1]
CHNL# 17: [ANGL199086 [TRENTON613.800] [6]] [ANGL156661 [DARL G1 22.000] [1]
CHNL# 16: [ANGL199085 [TRENTN5 13.800] [5]] [ANGL156661 [DARL G1 22.000] [1]
CHNL# 15: [ANGL199061 [TMP1 STO13.800] [1]] [ANGL156661 [DARL G1 22.000] [1]
CHNL# 13: [ANGL199043 [ACONIG1 20.000] [1]] [ANGL156661 [DARL G1 22.000] [1]
CHNL# 11: [ANGL199001 [LINGAN1 14.400] [1]] [ANGL156661 [DARL G1 22.000] [1]
100.00
-100.0
0.0
1.0000
2.0000
3.0000
4.0000
5.0000
6.0000
7.0000
8.0000
9.0000
10.000
TIME (SECONDS)
SAT, JAN 31 2009 15:42
NS ANGLE

2013 WINTER PEAK WITH DSM - DELIVER RESERVE
NS-NB=200; NB-NE=500; CBX=790; ONI=1015 ONS=704
1 PHASE FAULT L6003/L6007 AT 91H, CLEARED IN 6 CY
FAULT IMPEDANCE WITH BURNSIDE AND TC 1+2 OFF
FILE: b105c-L6003+L6007_DCT_nrec1-2013WP-DSM-NS-200.out
CHNL# 10: [ANGL190472 [BLLDNG2 19.000] [1]] [ANGL156661 [DARL G1 22.000] [1]
CHNL# 6: [ANGL190456 [LEPRG1 26.000] [1]] [ANGL156661 [DARL G1 22.000] [1]
CHNL# 5: [ANGL190450 [MACTG1 13.800] [1]] [ANGL156661 [DARL G1 22.000] [1]
CHNL# 3: [ANGL126652 [RAV 3 22.000] [1]] [ANGL156661 [DARL G1 22.000] [1]
CHNL# 2: [ANGL101063 [MYST G7 22.000] [1]] [ANGL156661 [DARL G1 22.000] [1]
CHNL# 1: [ANGL100060 [MIS GT1 18.000] [1]] [ANGL156661 [DARL G1 22.000] [1]
100.00
-100.0
0.0
1.0000
2.0000
3.0000
4.0000
5.0000
6.0000
7.0000
8.0000
9.0000
10.000
TIME (SECONDS)
SAT, JAN 31 2009 15:42
"NE,NY,NB ANGLE"

2013 WINTER PEAK WITH DSM - DELIVER RESERVE
NS-NB=200; NB-NE=500; CBX=790; ONI=1015 ONS=704
1 PHASE FAULT L6003/L6007 AT 91H, CLEARED IN 6 CY
FAULT IMPEDANCE WITH BURNSIDE AND TC 1+2 OFF
FILE: b105c-L6003+L6007_DCT_nrec1-2013WP-DSM-NS-200.out
CHNL# 59: [POWR199169 [TUFTCV3 14.400] [3]]
CHNL# 56: [POWR199086 [TRENTON613.800] [6]]
CHNL# 55: [POWR199085 [TRENTN5 13.800] [5]]
CHNL# 54: [POWR199061 [TMP1 STO13.800] [1]]
CHNL# 52: [POWR199043 [ACONIG1 20.000] [1]]
CHNL# 50: [POWR199001 [LINGAN1 14.400] [1]]
2.5000
0.0
-1.500
1.0000
2.0000
3.0000
4.0000
5.0000
6.0000
7.0000
8.0000
9.0000
10.000
TIME (SECONDS)
SAT, JAN 31 2009 15:42
NS MW

2013 WINTER PEAK WITH DSM - DELIVER RESERVE
NS-NB=200; NB-NE=500; CBX=790; ONI=1015 ONS=704
1 PHASE FAULT L6003/L6007 AT 91H, CLEARED IN 6 CY
FAULT IMPEDANCE WITH BURNSIDE AND TC 1+2 OFF
FILE: b105c-L6003+L6007_DCT_nrec1-2013WP-DSM-NS-200.out
CHNL# 49: [POWER190472 [BLLDNG2 19.000] [1]]
CHNL# 45: [POWER190456 [LEPRG1 26.000] [1]]
CHNL# 44: [POWER190450 [MACTG1 13.800] [1]]
CHNL# 42: [POWER126652 [RAV 3 22.000] [1]]
CHNL# 41: [POWER101063 [MYST G7 22.000] [1]]
CHNL# 40: [POWER100060 [MIS GT1 18.000] [1]]
5.0000
0.0
4.0000
1.0000
2.0000
3.0000
4.0000
5.0000
6.0000
7.0000
8.0000
9.0000
10.000
TIME (SECONDS)
SAT, JAN 31 2009 15:42
"NE,NY,NB POWER"

2013 WINTER PEAK WITH DSM - DELIVER RESERVE
NS-NB=200; NB-NE=500; CBX=790; ONI=1015 ONS=704
1 PHASE FAULT L6003/L6007 AT 91H, CLEARED IN 6 CY
FAULT IMPEDANCE WITH BURNSIDE AND TC 1+2 OFF
FILE: b105c-L6003+L6007_DCT_nrec1-2013WP-DSM-NS-200.out
CHNL# 119: [VARS IR141-DIGBY]
CHNL# 118: [VARS IR137-STATIA]
CHNL# 117: [VARS IR114-GLENDHU]
CHNL# 116: [VARS IR84-DALHOUSIE]
CHNL# 115: [VARS IR82_NUTTBY]
CHNL# 114: [VARS IR45_AMHERST]
TIME (SECONDS)
SAT, JAN 31 2009 15:42
NS WIND MV

2013 WINTER PEAK WITH DSM - DELIVER RESERVE
NS-NB=200; NB-NE=500; CBX=790; ONI=1015 ONS=704
1 PHASE FAULT L6003/L6007 AT 91H, CLEARED IN 6 CY
FAULT IMPEDANCE WITH BURNSIDE AND TC 1+2 OFF
FILE: b105c-L6003+L6007_DCT_nrec1-2013WP-DSM-NS-200.out
CHNL# 79: [POWER IR141-DIGBY]
CHNL# 78: [POWER IR137-STATIA]
CHNL# 77: [POWER IR114-GLENDHU]
CHNL# 76: [POWER IR84-DALHOUSIE]
CHNL# 75: [POWER IR82_NUTTBY]
CHNL# 74: [POWER IR45_AMHERST]
TIME (SECONDS)
SAT, JAN 31 2009 15:42
NS WIND MW

2013 WINTER PEAK WITH DSM - DELIVER RESERVE
NS-NB=200; NB-NE=500; CBX=790; ONI=1015 ONS=704
1 PHASE FAULT L6003/L6007 AT 91H, CLEARED IN 6 CY
FAULT IMPEDANCE WITH BURNSIDE AND TC 1+2 OFF
FILE: b105c-L6003+L6007_DCT_nrec1-2013WP-DSM-NS-200.out
CHNL# 133: [VOLT199125 [ONSLOW 345.00]]
CHNL# 132: [VOLT199120 [HOPEWELL 345.00]]
CHNL# 131: [VOLT199045 [WOODBINE345.00]]
CHNL# 130: [VOLT190320 [SALBRY 345.00]]
CHNL# 128: [VOLT190004 [KESWICK 345.00]]
CHNL# 127: [VOLT 70002 [ORRINGTN345.00]]
TIME (SECONDS)
SAT, JAN 31 2009 15:42
"345KV VOLTAGE"

2013 WINTER PEAK WITH DSM - DELIVER RESERVE
NS-NB=200; NB-NE=500; CBX=790; ONI=1015 ONS=704
1 PHASE FAULT L6003/L6007 AT 91H, CLEARED IN 6 CY
FAULT IMPEDANCE WITH BURNSIDE AND TC 1+2 OFF
FILE: b105c-L6003+L6007_DCT_nrec1-2013WP-DSM-NS-200.out
CHNL# 125: 60*(1+[FREQ199125 [ONSLOW 345.00]])
CHNL# 124: 60*(1+[FREQ199120 [HOPEWELL 345.00]])
CHNL# 123: 60*(1+[FREQ199045 [WOODBINE345.00]])
CHNL# 122: 60*(1+[FREQ190320 [SALBRY 345.00]])
CHNL# 121: 60*(1+[FREQ190197 [C.COVE 345.00]])
CHNL# 120: 60*(1+[FREQ 70002 [ORRINGTN345.00]])
TIME (SECONDS)
SAT, JAN 31 2009 15:42
FREQUENCY HZ

2013 WINTER PEAK WITH DSM - DELIVER RESERVE
NS-NB=200; NB-NE=500; CBX=790; ONI=1015 ONS=704
1 PHASE FAULT L6003/L6007 AT 91H, CLEARED IN 6 CY
FAULT IMPEDANCE WITH BURNSIDE AND TC 1+2 OFF
FILE: b105c-L6003+L6007_DCT_nrec1-2013WP-DSM-NS-200.out
CHNL# 146: [VOLT199280 [TUSKET A138.00]]
CHNL# 145: [VOLT199193 [HHWAS 138.00]]
CHNL# 144: [VOLT199165 [TUFTCOVE138.00]]
CHNL# 143: [VOLT199138: [SPRNGHILL138.00]]
CHNL# 142: [VOLT199090 [SON-TREN138.00]]
CHNL# 141: [VOLT199051 [HASTINGS138.00]]
1.2000
0.70000
0.0
1.0000
2.0000
3.0000
4.0000
5.0000
6.0000
7.0000
8.0000
9.0000
10.000
TIME (SECONDS)
SAT, JAN 31 2009 15:42
138KV BUS VOLTS

2013 WINTER PEAK WITH DSM - DELIVER RESERVE
NS-NB=200; NB-NE=500; CBX=790; ONI=1015 ONS=704
1 PHASE FAULT L6003/L6007 AT 91H, CLEARED IN 6 CY
FAULT IMPEDANCE WITH BURNSIDE AND TC 1+2 OFF
FILE: b105c-L6003+L6007_DCT_nrec1-2013WP-DSM-NS-200.out
CHNL# 140: [VOLT199240 [BWATER A230.00]]
CHNL# 139: [VOLT199200 [BRUSHY 230.00]]
CHNL# 138: [VOLT199130 [ONSLOW 230.00]]
CHNL# 137: [VOLT199050 [HASTINGS230.00]]
CHNL# 136: [VOLT199044 [PT.ACONI230.00]]
CHNL# 135: [VOLT199000 [LINGAN 230.00]]
1.2000
0.70000
0.0
1.0000
2.0000
3.0000
4.0000
5.0000
6.0000
7.0000
8.0000
9.0000
10.000
TIME (SECONDS)
SAT, JAN 31 2009 15:42
230KV BUS VOLTS

2013 WINTER PEAK WITH DSM - DELIVER RESERVE
NS-NB=200; NB-NE=500; CBX=790; ONI=1015 ONS=704
1 PHASE FAULT L6003/L6007 AT 91H, CLEARED IN 6 CY
FAULT IMPEDANCE WITH BURNSIDE AND TC 1+2 OFF
FILE: b105c-L6003+L6007_DCT_nrec1-2013WP-DSM-NS-200.out
CHNL# 217: [L6513(MW)]
CHNL# 215: [L6503(MV)]
CHNL# 197: [L8003(MV)]
CHNL# 195: [L8004(MV)]
CHNL# 193: [L8001(MV)]
CHNL# 221: [L3001(MV)]
250.00
-250.0
500.00
0.0
1000.0
-1000.
0.0
1.0000
2.0000
3.0000
4.0000
5.0000
6.0000
7.0000
8.0000
9.0000
10.000
TIME (SECONDS)
SAT, JAN 31 2009 15:42
LINE FLOW MW

2013 WINTER PEAK WITH DSM - DELIVER RESERVE
NS-NB=200; NB-NE=500; CBX=790; ONI=1015 ONS=704
1 PHASE FAULT L6003/L6007 AT 91H, CLEARED IN 6 CY
FAULT IMPEDANCE WITH BURNSIDE AND TC 1+2 OFF
FILE: b105c-L6003+L6007_DCT_nrec1-2013WP-DSM-NS-200.out
CHNL# 154: [IR141-DIGBYH69.0 VOLTS]
CHNL# 153: [IR137-STATIG25.0 VOLTS]
CHNL# 152: [IR114-GLENDH138.0 VOLTS]
CHNL# 151: [IR84-DALHOHV230.0 VOLTS]
CHNL# 150: [IR82 NUTBHV69.0 VOLTS]
CHNL# 149: [IR45 AMHERTP138.0 VOLTS]
1.2000
0.70000
0.0
1.0000
2.0000
3.0000
4.0000
5.0000
6.0000
7.0000
8.0000
9.0000
10.000
TIME (SECONDS)
SAT, JAN 31 2009 15:42
WIND BUS VOLTS

2013 WINTER PEAK WITH DSM - DELIVER RESERVE
NS-NB=200; NB-NE=500; CBX=790; ONI=1015 ONS=704
DCT FAULT ON L7008 L7009 AT BRUSHYHILL
WEST SEPARATES IN .2 SEC
FILE: b106-L7008+L7009_DCT_nrecl-2013WP-DSM-NS-200.out
CHNL# 20: [ANGL199169 [TUFTCV3 14.400] [3]] [ANGL156661 [DARL G1 22.000] [1]]
CHNL# 17: [ANGL199086 [TRENTON613.800] [6]] [ANGL156661 [DARL G1 22.000] [1]]
CHNL# 16: [ANGL199085 [TRENTN5 13.800] [5]] [ANGL156661 [DARL G1 22.000] [1]]
CHNL# 15: [ANGL199061 [TMP1 STO13.800] [1]] [ANGL156661 [DARL G1 22.000] [1]]
CHNL# 13: [ANGL199043 [ACONIG1 20.000] [1]] [ANGL156661 [DARL G1 22.000] [1]]
CHNL# 11: [ANGL199001 [LINGAN1 14.400] [1]] [ANGL156661 [DARL G1 22.000] [1]]
100.00
-100.0
0.0
1.0000
2.0000
3.0000
4.0000
5.0000
6.0000
7.0000
8.0000
9.0000
10.000
TIME (SECONDS)
SUN, FEB 01 2009 11:40
NS ANGLE

2013 WINTER PEAK WITH DSM - DELIVER RESERVE
NS-NB=200; NB-NE=500; CBX=790; ONI=1015 ONS=704
DCT FAULT ON L7008 L7009 AT BRUSHYHILL
WEST SEPARATES IN .2 SEC
FILE: b106-L7008+L7009_DCT_nrecl-2013WP-DSM-NS-200.out
CHNL# 10: [ANGL190472 [BLLDNG2 19.000] [1]] [ANGL156661 [DARL G1 22.000] [1]]
CHNL# 6: [ANGL190456 [LEPRG1 26.000] [1]] [ANGL156661 [DARL G1 22.000] [1]]
CHNL# 5: [ANGL190450 [MACTG1 13.800] [1]] [ANGL156661 [DARL G1 22.000] [1]]
CHNL# 3: [ANGL126652 [RAV 3 22.000] [1]] [ANGL156661 [DARL G1 22.000] [1]]
CHNL# 2: [ANGL101063 [MYST G7 22.000] [1]] [ANGL156661 [DARL G1 22.000] [1]]
CHNL# 1: [ANGL100060 [MIS GT1 18.000] [1]] [ANGL156661 [DARL G1 22.000] [1]]
100.00
-100.0
0.0
1.0000
2.0000
3.0000
4.0000
5.0000
6.0000
7.0000
8.0000
9.0000
10.000
TIME (SECONDS)
SUN, FEB 01 2009 11:40
"NE,NY,NB ANGLE"

2013 WINTER PEAK WITH DSM - DELIVER RESERVE
NS-NB=200; NB-NE=500; CBX=790; ONI=1015 ONS=704
DCT FAULT ON L7008 L7009 AT BRUSHYHILL
WEST SEPARATES IN .2 SEC
FILE: b106-L7008+L7009_DCT_nrecl-2013WP-DSM-NS-200.out
CHNL# 59: [POWR199169 [TUFTCV3 14.400] [3]]
CHNL# 56: [POWR199086 [TRENTON613.800] [6]]
CHNL# 55: [POWR199085 [TRENTN5 13.800] [5]]
CHNL# 54: [POWR199061 [TMP1 STO13.800] [1]]
CHNL# 52: [POWR199043 [ACONIG1 20.000] [1]]
CHNL# 50: [POWR199001 [LINGAN1 14.400] [1]]
2.5000
0.0
-1.500
1.0000
2.0000
3.0000
4.0000
5.0000
6.0000
7.0000
8.0000
9.0000
10.000
TIME (SECONDS)
SUN, FEB 01 2009 11:40
NS MW

2013 WINTER PEAK WITH DSM - DELIVER RESERVE
NS-NB=200; NB-NE=500; CBX=790; ONI=1015 ONS=704
DCT FAULT ON L7008 L7009 AT BRUSHYHILL
WEST SEPARATES IN .2 SEC
FILE: b106-L7008+L7009_DCT_nrecl-2013WP-DSM-NS-200.out
CHNL# 49: [POWER190472 [BLLDNG2 19.000] [1]]
CHNL# 45: [POWER190456 [LEPRG1 26.000] [1]]
CHNL# 44: [POWER190450 [MACTG1 13.800] [1]]
CHNL# 42: [POWER126652 [RAV 3 22.000] [1]]
CHNL# 41: [POWER101063 [MYST G7 22.000] [1]]
CHNL# 40: [POWER100060 [MIS GT1 18.000] [1]]
5.0000
0.0
4.0000
1.0000
2.0000
3.0000
4.0000
5.0000
6.0000
7.0000
8.0000
9.0000
10.000
TIME (SECONDS)
SUN, FEB 01 2009 11:40
"NE,NY,NB POWER"

2013 WINTER PEAK WITH DSM - DELIVER RESERVE
NS-NB=200; NB-NE=500; CBX=790; ONI=1015 ONS=704
DCT FAULT ON L7008 L7009 AT BRUSHYHILL
WEST SEPARATES IN .2 SEC
FILE: b106-L7008+L7009_DCT_nrecl-2013WP-DSM-NS-200.out
CHNL# 119: [VARS IR141-DIGBY]
CHNL# 118: [VARS IR137-STATIA]
CHNL# 117: [VARS IR114-GLENDHU]
CHNL# 116: [VARS IR84-DALHOUSIE]
CHNL# 115: [VARS IR82_NUTTBY]
CHNL# 114: [VARS IR45_AMHERST]
TIME (SECONDS)
SUN, FEB 01 2009 11:40
NS WIND MV

2013 WINTER PEAK WITH DSM - DELIVER RESERVE
NS-NB=200; NB-NE=500; CBX=790; ONI=1015 ONS=704
DCT FAULT ON L7008 L7009 AT BRUSHYHILL
WEST SEPARATES IN .2 SEC
FILE: b106-L7008+L7009_DCT_nrecl-2013WP-DSM-NS-200.out
CHNL# 79: [POWER IR141-DIGBY]
CHNL# 78: [POWER IR137-STATIA]
CHNL# 77: [POWER IR114-GLENDHU]
CHNL# 76: [POWER IR84-DALHOUSIE]
CHNL# 75: [POWER IR82_NUTTBY]
CHNL# 74: [POWER IR45_AMHERST]
TIME (SECONDS)
SUN, FEB 01 2009 11:40
NS WIND MW

2013 WINTER PEAK WITH DSM - DELIVER RESERVE
NS-NB=200; NB-NE=500; CBX=790; ONI=1015 ONS=704
DCT FAULT ON L7008 L7009 AT BRUSHYHILL
WEST SEPARATES IN .2 SEC
FILE: b106-L7008+L7009_DCT_nrecl-2013WP-DSM-NS-200.out
CHNL# 133: [VOLT199125 [ONSLOW 345.00]]
CHNL# 132: [VOLT199120 [HOPEWELL 345.00]]
CHNL# 131: [VOLT199045 [WOODBINE345.00]]
CHNL# 130: [VOLT190320 [SALBRY 345.00]]
CHNL# 128: [VOLT190004 [KESWICK 345.00]]
CHNL# 127: [VOLT 70002 [ORRINGTN345.00]]
TIME (SECONDS)
SUN, FEB 01 2009 11:40
"345KV VOLTAGE"

2013 WINTER PEAK WITH DSM - DELIVER RESERVE
NS-NB=200; NB-NE=500; CBX=790; ONI=1015 ONS=704
DCT FAULT ON L7008 L7009 AT BRUSHYHILL
WEST SEPARATES IN .2 SEC
FILE: b106-L7008+L7009_DCT_nrecl-2013WP-DSM-NS-200.out
CHNL# 125: 60*(1+[FREQ199125 [ONSLOW 345.00]])
CHNL# 124: 60*(1+[FREQ199120 [HOPEWELL 345.00]])
CHNL# 123: 60*(1+[FREQ199045 [WOODBINE345.00]])
CHNL# 122: 60*(1+[FREQ190320 [SALBRY 345.00]])
CHNL# 121: 60*(1+[FREQ190197 [C.COVE 345.00]])
CHNL# 120: 60*(1+[FREQ 70002 [ORRINGTN345.00]])
TIME (SECONDS)
SUN, FEB 01 2009 11:40
FREQUENCY HZ

2013 WINTER PEAK WITH DSM - DELIVER RESERVE
NS-NB=200; NB-NE=500; CBX=790; ONI=1015 ONS=704
DCT FAULT ON L7008 L7009 AT BRUSHYHILL
WEST SEPARATES IN .2 SEC
FILE: b106-L7008+L7009_DCT_nrecl-2013WP-DSM-NS-200.out
CHNL# 146: [VOLT199280 [TUSKET A138.00]]
CHNL# 145: [VOLT199193 [HHWAS 138.00]]
CHNL# 144: [VOLT199165 [TUFTCOVE138.00]]
CHNL# 143: [VOLT199138: [SPRNGHIL138.00]]
CHNL# 142: [VOLT199090 [50N-TREN138.00]]
CHNL# 141: [VOLT199051 [HASTINGS138.00]]
1.2000
0.70000
0.0
1.0000
2.0000
3.0000
4.0000
5.0000
6.0000
7.0000
8.0000
9.0000
10.000
TIME (SECONDS)
SUN, FEB 01 2009 11:40
138KV BUS VOLTS

2013 WINTER PEAK WITH DSM - DELIVER RESERVE
NS-NB=200; NB-NE=500; CBX=790; ONI=1015 ONS=704
DCT FAULT ON L7008 L7009 AT BRUSHYHILL
WEST SEPARATES IN .2 SEC
FILE: b106-L7008+L7009_DCT_nrecl-2013WP-DSM-NS-200.out
CHNL# 140: [VOLT199240 [BWATER A230.00]]
CHNL# 139: [VOLT199200 [BRUSHY 230.00]]
CHNL# 138: [VOLT199130 [ONSLOW 230.00]]
CHNL# 137: [VOLT199050 [HASTINGS230.00]]
CHNL# 136: [VOLT199044 [PT.ACONI230.00]]
CHNL# 135: [VOLT199000 [LINGAN 230.00]]
1.2000
0.70000
0.0
1.0000
2.0000
3.0000
4.0000
5.0000
6.0000
7.0000
8.0000
9.0000
10.000
TIME (SECONDS)
SUN, FEB 01 2009 11:40
230KV BUS VOLTS

2013 WINTER PEAK WITH DSM - DELIVER RESERVE
NS-NB=200; NB-NE=500; CBX=790; ONI=1015 ONS=704
DCT FAULT ON L7008 L7009 AT BRUSHYHILL
WEST SEPARATES IN .2 SEC
FILE: b106-L7008+L7009_DCT_nrecl-2013WP-DSM-NS-200.out
CHNL# 217: [L6533MW]
CHNL# 215: [L6503MW]
CHNL# 197: [L8003MW]
CHNL# 195: [L8004MW]
CHNL# 193: [L8001MW]
CHNL# 221: [L3001MW]
250.00
-250.0
500.00
0.0
1000.0
-1000.
0.0
1.0000
2.0000
3.0000
4.0000
5.0000
6.0000
7.0000
8.0000
9.0000
10.000
TIME (SECONDS)
SUN, FEB 01 2009 11:40
LINE FLOW MW

2013 WINTER PEAK WITH DSM - DELIVER RESERVE
NS-NB=200; NB-NE=500; CBX=790; ONI=1015 ONS=704
DCT FAULT ON L7008 L7009 AT BRUSHYHILL
WEST SEPARATES IN .2 SEC
FILE: b106-L7008+L7009_DCT_nrecl-2013WP-DSM-NS-200.out
CHNL# 154: [IR141-DIGBYH69.0 VOLTS]
CHNL# 153: [IR137-STATIG25.0 VOLTS]
CHNL# 152: [IR114-GLENDH138.0 VOLTS]
CHNL# 151: [IR84-DALHOHV230.0 VOLTS]
CHNL# 150: [IR82 NUTBHV69.0 VOLTS]
CHNL# 149: [IR45 AMHERTP138.0 VOLTS]
1.2000
0.70000
0.0
1.0000
2.0000
3.0000
4.0000
5.0000
6.0000
7.0000
8.0000
9.0000
10.000
TIME (SECONDS)
SUN, FEB 01 2009 11:40
WIND BUS VOLTS

2013 WINTER PEAK WITH DSM - DELIVER RESERVE
NS-NB=200; NB-NE=500; CBX=790; ONI=1015 ONS=704
1 PHASE FAULT HOPEWELL L6507, CLEARED IN 6 CY
BBU ON BREAKER 600 CLEARS THE STATION - NO SPS
FILE: c101-79N-606_BBU_mecl-2013WP-DSM-NS-200.out
CHNL#S 20:4 [ANGL199169 [TUFTCV3 14.400] [3]] [ANGL156661 [DARL G1 22.000] [1
CHNL#S 17:4 [ANGL199086 [TRENTON613.800] [6]] [ANGL156661 [DARL G1 22.000] [1
CHNL#S 16:4 [ANGL199085 [TRENTN5 13.800] [5]] [ANGL156661 [DARL G1 22.000] [1
CHNL#S 15:4 [ANGL199061 [TMP1 STO13.800] [1]] [ANGL156661 [DARL G1 22.000] [1
CHNL#S 13:4 [ANGL199043 [ACONIG1 20.000] [1]] [ANGL156661 [DARL G1 22.000] [1
CHNL#S 11:4 [ANGL199001 [LINGAN1 14.400] [1]] [ANGL156661 [DARL G1 22.000] [1
100.00
-100.0
0.0
1.0000
2.0000
3.0000
4.0000
5.0000
6.0000
7.0000
8.0000
9.0000
10.000
TIME (SECONDS)
SAT, JAN 31 2009 15:42
NS ANGLE

2013 WINTER PEAK WITH DSM - DELIVER RESERVE
NS-NB=200; NB-NE=500; CBX=790; ONI=1015 ONS=704
1 PHASE FAULT HOPEWELL L6507, CLEARED IN 6 CY
BBU ON BREAKER 600 CLEARS THE STATION - NO SPS
FILE: c101-79N-606_BBU_mecl-2013WP-DSM-NS-200.out
CHNL#S 10:4 [ANGL190472 [BLLDNG2 19.000] [1]] [ANGL156661 [DARL G1 22.000] [1
CHNL#S 6:4 [ANGL190456 [LEPRG1 26.000] [1]] [ANGL156661 [DARL G1 22.000] [1
CHNL#S 5:4 [ANGL190450 [MACTG1 13.800] [1]] [ANGL156661 [DARL G1 22.000] [1
CHNL#S 3:4 [ANGL126652 [RAV 3 22.000] [1]] [ANGL156661 [DARL G1 22.000] [1
CHNL#S 2:4 [ANGL101063 [MYST G7 22.000] [1]] [ANGL156661 [DARL G1 22.000] [1
CHNL#S 1:4 [ANGL100060 [MIS GT1 18.000] [1]] [ANGL156661 [DARL G1 22.000] [1
100.00
-100.0
0.0
1.0000
2.0000
3.0000
4.0000
5.0000
6.0000
7.0000
8.0000
9.0000
10.000
TIME (SECONDS)
SAT, JAN 31 2009 15:42
"NE,NY,NB ANGLE"

2013 WINTER PEAK WITH DSM - DELIVER RESERVE
NS-NB=200; NB-NE=500; CBX=790; ONI=1015 ONS=704
1 PHASE FAULT HOPEWELL L6507, CLEARED IN 6 CY
BBU ON BREAKER 600 CLEARS THE STATION - NO SPS
FILE: c101-79N-606_BBU_mecl-2013WP-DSM-NS-200.out
CHNL# 59: [POWER199169 [TUFTCV3 14.400] [3]]
CHNL# 56: [POWER199086 [TRENTON613.800] [6]]
CHNL# 55: [POWER199085 [TRENTN5 13.800] [5]]
CHNL# 54: [POWER199061 [TMP1 STO13.800] [1]]
CHNL# 52: [POWER199043 [ACONIG1 20.000] [1]]
CHNL# 50: [POWER199001 [LINGAN1 14.400] [1]]
2.5000
0.0
-1.500
1.0000
0.0
TIME (SECONDS)
SAT, JAN 31 2009 15:42
NS MW

2013 WINTER PEAK WITH DSM - DELIVER RESERVE
NS-NB=200; NB-NE=500; CBX=790; ONI=1015 ONS=704
1 PHASE FAULT HOPEWELL L6507, CLEARED IN 6 CY
BBU ON BREAKER 600 CLEARS THE STATION - NO SPS
FILE: c101-79N-606_BBU_mecl-2013WP-DSM-NS-200.out
CHNL# 49: [POWER190472 [BLLDNG2 19.000] [1]]
CHNL# 45: [POWER190456 [LEPRG1 26.000] [1]]
CHNL# 44: [POWER190450 [MACTG1 13.800] [1]]
CHNL# 42: [POWER126652 [RAV 3 22.000] [1]]
CHNL# 41: [POWER101063 [MYST G7 22.000] [1]]
CHNL# 40: [POWER100060 [MIS GT1 18.000] [1]]
5.0000
0.0
4.0000
0.0
1.0000
7.0000
2.0000
TIME (SECONDS)
SAT, JAN 31 2009 15:42
"NE,NY,NB POWER"

2013 WINTER PEAK WITH DSM - DELIVER RESERVE
NS-NB=200; NB-NE=500; CBX=790; ONI=1015 ONS=704
1 PHASE FAULT HOPEWELL L6507, CLEARED IN 6 CY
BBU ON BREAKER 600 CLEARS THE STATION - NO SPS
FILE: c101-79N-606_BBU_mecl-2013WP-DSM-NS-200.out
CHNL# 119: [VARS IR141-DIGBY]
CHNL# 118: [VARS IR137-STATIA]
CHNL# 117: [VARS IR114-GLENDHU]
CHNL# 116: [VARS IR84-DALHOUSIE]
CHNL# 115: [VARS IR82_NUTTBY]
CHNL# 114: [VARS IR45_AMHERST]
TIME (SECONDS)
SAT, JAN 31 2009 15:42
NS WIND MV

2013 WINTER PEAK WITH DSM - DELIVER RESERVE
NS-NB=200; NB-NE=500; CBX=790; ONI=1015 ONS=704
1 PHASE FAULT HOPEWELL L6507, CLEARED IN 6 CY
BBU ON BREAKER 600 CLEARS THE STATION - NO SPS
FILE: c101-79N-606_BBU_mecl-2013WP-DSM-NS-200.out
CHNL# 79: [POWER IR141-DIGBY]
CHNL# 78: [POWER IR137-STATIA]
CHNL# 77: [POWER IR114-GLENDHU]
CHNL# 76: [POWER IR84-DALHOUSIE]
CHNL# 75: [POWER IR82_NUTTBY]
CHNL# 74: [POWER IR45_AMHERST]
TIME (SECONDS)
SAT, JAN 31 2009 15:42
NS WIND MW

2013 WINTER PEAK WITH DSM - DELIVER RESERVE
NS-NB=200; NB-NE=500; CBX=790; ONI=1015 ONS=704
1 PHASE FAULT HOPEWELL L6507, CLEARED IN 6 CY
BBU ON BREAKER 600 CLEARS THE STATION - NO SPS
FILE: c101-79N-606_BBU_mecl-2013WP-DSM-NS-200.out
CHNL# 133: [VOLT199125 IONSLOW 345.00]
CHNL# 132: [VOLT199120 IHOPEWELL345.00]
CHNL# 131: [VOLT199045 IWOODBINE345.00]
CHNL# 130: [VOLT190320 ISALBRY 345.00]
CHNL# 128: [VOLT190004 IKESWICK 345.00]
CHNL# 127: [VOLT 70002 IORRINGTN345.00]
TIME (SECONDS)
SAT, JAN 31 2009 15:42
"345KV VOLTAGE"

2013 WINTER PEAK WITH DSM - DELIVER RESERVE
NS-NB=200; NB-NE=500; CBX=790; ONI=1015 ONS=704
1 PHASE FAULT HOPEWELL L6507, CLEARED IN 6 CY
BBU ON BREAKER 600 CLEARS THE STATION - NO SPS
FILE: c101-79N-606_BBU_mecl-2013WP-DSM-NS-200.out
CHNL# 125: 60*(1+[FREQ199125 IONSLOW 345.00])
CHNL# 124: 60*(1+[FREQ199120 IHOPEWELL345.00])
CHNL# 123: 60*(1+[FREQ199045 IWOODBINE345.00])
CHNL# 122: 60*(1+[FREQ190320 ISALBRY 345.00])
CHNL# 121: 60*(1+[FREQ190197 IC.COVE 345.00])
CHNL# 120: 60*(1+[FREQ 70002 IORRINGTN345.00])
TIME (SECONDS)
SAT, JAN 31 2009 15:42
FREQUENCY HZ

2013 WINTER PEAK WITH DSM - DELIVER RESERVE
NS-NB=200; NB-NE=500; CBX=790; ONI=1015 ONS=704
1 PHASE FAULT HOPEWELL L6507, CLEARED IN 6 CY
BBU ON BREAKER 600 CLEARS THE STATION - NO SPS
FILE: c101-79N-606_BBU_nrecl-2013WP-DSM-NS-200.out
CHNL# 146: [VOLT199280 [TUSKET A138.00]]
CHNL# 145: [VOLT199193 [HHWAS 138.00]]
CHNL# 144: [VOLT199165 [TUFTCOVE138.00]]
CHNL# 143: [VOLT199138 [SPRNGHIL138.00]]
CHNL# 142: [VOLT199090 [50N-TREN138.00]]
CHNL# 141: [VOLT199051 [HASTINGS138.00]]
1.2000
0.70000
0.0
1.0000
2.0000
3.0000
4.0000
5.0000
6.0000
7.0000
8.0000
9.0000
10.000
TIME (SECONDS)
SAT, JAN 31 2009 15:42
138KV BUS VOLTS

2013 WINTER PEAK WITH DSM - DELIVER RESERVE
NS-NB=200; NB-NE=500; CBX=790; ONI=1015 ONS=704
1 PHASE FAULT HOPEWELL L6507, CLEARED IN 6 CY
BBU ON BREAKER 600 CLEARS THE STATION - NO SPS
FILE: c101-79N-606_BBU_nrecl-2013WP-DSM-NS-200.out
CHNL# 140: [VOLT199240 [BWATER A230.00]]
CHNL# 139: [VOLT199200 [BRUSHY 230.00]]
CHNL# 138: [VOLT199130 [ONSLOW 230.00]]
CHNL# 137: [VOLT199050 [HASTINGS230.00]]
CHNL# 136: [VOLT199044 [PT.ACONI230.00]]
CHNL# 135: [VOLT199000 [LINGAN 230.00]]
1.2000
0.70000
0.0
1.0000
2.0000
3.0000
4.0000
5.0000
6.0000
7.0000
8.0000
9.0000
10.000
TIME (SECONDS)
SAT, JAN 31 2009 15:42
230KV BUS VOLTS

2013 WINTER PEAK WITH DSM - DELIVER RESERVE
NS-NB=200; NB-NE=500; CBX=790; ONI=1015 ONS=704
1 PHASE FAULT HOPEWELL L6507, CLEARED IN 6 CY
BBU ON BREAKER 600 CLEARS THE STATION - NO SPS
FILE: c101-79N-606_BBU_nrecl-2013WP-DSM-NS-200.out
CHNL# 217: [L6513MW]
CHNL# 215: [L6503MW]
CHNL# 197: [L8003MW]
CHNL# 195: [L8004MW]
CHNL# 193: [L8001MW]
CHNL# 221: [L3001MW]
250.00
500.00
1000.0
0.0
-250.0
-1000.
0.0
1.0000
2.0000
3.0000
4.0000
5.0000
6.0000
7.0000
8.0000
9.0000
10.000
TIME (SECONDS)
SAT, JAN 31 2009 15:42
LINE FLOW MW

2013 WINTER PEAK WITH DSM - DELIVER RESERVE
NS-NB=200; NB-NE=500; CBX=790; ONI=1015 ONS=704
1 PHASE FAULT HOPEWELL L6507, CLEARED IN 6 CY
BBU ON BREAKER 600 CLEARS THE STATION - NO SPS
FILE: c101-79N-606_BBU_nrecl-2013WP-DSM-NS-200.out
CHNL# 154: [IR141-DIGBYH69.0 VOLTS]
CHNL# 153: [IR137-STATIG25.0 VOLTS]
CHNL# 152: [IR114-GLENDH138.0 VOLTS]
CHNL# 151: [IR84-DALHOHV230.0 VOLTS]
CHNL# 150: [IR82 NUTBHV69.0 VOLTS]
CHNL# 149: [IR45 AMHERTP138.0 VOLTS]
1.2000
0.70000
0.0
1.0000
2.0000
3.0000
4.0000
5.0000
6.0000
7.0000
8.0000
9.0000
10.000
TIME (SECONDS)
SAT, JAN 31 2009 15:42
WIND BUS VOLTS

2013 WINTER PEAK WITH DSM - DELIVER RESERVE
NS-NB=200; NB-NE=500; CBX=790; ONI=1015 ONS=704
1 PHASE FAULT HOPEWELL L6507, CLEARED IN 6 CY
BBU ON BREAKER 600 CLEARS THE STATION - 1 UNIT SPS
FILE: c101s-79N-606_BBU_mrec-2013WP-DSM-NS-200.out
CHNL# 20: [ANGL199169 [TUFTCV3 14.400] [3]] [ANGL156661 [DARL G1 22.000] [1]
CHNL# 17: [ANGL199086 [TRENTON613.800] [6]] [ANGL156661 [DARL G1 22.000] [1]
CHNL# 16: [ANGL199085 [TRENTN5 13.800] [5]] [ANGL156661 [DARL G1 22.000] [1]
CHNL# 15: [ANGL199061 [TMP1 STO13.800] [1]] [ANGL156661 [DARL G1 22.000] [1]
CHNL# 13: [ANGL199043 [ACONIG1 20.000] [1]] [ANGL156661 [DARL G1 22.000] [1]
CHNL# 11: [ANGL199001 [LINGAN1 14.400] [1]] [ANGL156661 [DARL G1 22.000] [1]
100.00
-100.0
0.0
1.0000
2.0000
3.0000
4.0000
5.0000
6.0000
7.0000
8.0000
9.0000
10.000
TIME (SECONDS)
SAT, JAN 31 2009 15:42
NS ANGLE

2013 WINTER PEAK WITH DSM - DELIVER RESERVE
NS-NB=200; NB-NE=500; CBX=790; ONI=1015 ONS=704
1 PHASE FAULT HOPEWELL L6507, CLEARED IN 6 CY
BBU ON BREAKER 600 CLEARS THE STATION - 1 UNIT SPS
FILE: c101s-79N-606_BBU_mrec-2013WP-DSM-NS-200.out
CHNL# 10: [ANGL190472 [BLLDNG2 19.000] [1]] [ANGL156661 [DARL G1 22.000] [1]
CHNL# 6: [ANGL190456 [LEPRG1 26.000] [1]] [ANGL156661 [DARL G1 22.000] [1]
CHNL# 5: [ANGL190450 [MACTG1 13.800] [1]] [ANGL156661 [DARL G1 22.000] [1]
CHNL# 3: [ANGL126652 [RAV 3 22.000] [1]] [ANGL156661 [DARL G1 22.000] [1]
CHNL# 2: [ANGL101063 [MYST G7 22.000] [1]] [ANGL156661 [DARL G1 22.000] [1]
CHNL# 1: [ANGL100060 [MIS GT1 18.000] [1]] [ANGL156661 [DARL G1 22.000] [1]
100.00
-100.0
0.0
1.0000
2.0000
3.0000
4.0000
5.0000
6.0000
7.0000
8.0000
9.0000
10.000
TIME (SECONDS)
SAT, JAN 31 2009 15:42
"NE,NY,NB ANGLE"

2013 WINTER PEAK WITH DSM - DELIVER RESERVE
NS-NB=200; NB-NE=500; CBX=790; ONI=1015 ONS=704
1 PHASE FAULT HOPEWELL L6507, CLEARED IN 6 CY
BBU ON BREAKER 600 CLEARS THE STATION - 1 UNIT SPS
FILE: c101s-79N-606_BBU_mrec-2013WP-DSM-NS-200.out
CHNL# 59: [POWER199169 [TUFTCV3 14.400] [3]]
CHNL# 56: [POWER199086 [TRENTON613.800] [6]]
CHNL# 55: [POWER199085 [TRENTN5 13.800] [5]]
CHNL# 54: [POWER199061 [TMP1 STO13.800] [1]]
CHNL# 52: [POWER199043 [ACONIG1 20.000] [1]]
CHNL# 50: [POWER199001 [LINGAN1 14.400] [1]]
2.5000
0.0
-1.500
1.0000
2.0000
3.0000
4.0000
5.0000
6.0000
7.0000
8.0000
9.0000
10.000
TIME (SECONDS)
SAT, JAN 31 2009 15:42
NS MW

2013 WINTER PEAK WITH DSM - DELIVER RESERVE
NS-NB=200; NB-NE=500; CBX=790; ONI=1015 ONS=704
1 PHASE FAULT HOPEWELL L6507, CLEARED IN 6 CY
BBU ON BREAKER 600 CLEARS THE STATION - 1 UNIT SPS
FILE: c101s-79N-606_BBU_mrec-2013WP-DSM-NS-200.out
CHNL# 49: [POWER190472 [BLLDNG2 19.000] [1]]
CHNL# 45: [POWER190456 [LEPRG1 26.000] [1]]
CHNL# 44: [POWER190450 [MACTG1 13.800] [1]]
CHNL# 42: [POWER126652 [RAV 3 22.000] [1]]
CHNL# 41: [POWER101063 [MYST G7 22.000] [1]]
CHNL# 40: [POWER100060 [MIS GT1 18.000] [1]]
5.0000
0.0
4.0000
1.0000
2.0000
3.0000
4.0000
5.0000
6.0000
7.0000
8.0000
9.0000
10.000
TIME (SECONDS)
SAT, JAN 31 2009 15:42
"NE,NY,NB POWER"

2013 WINTER PEAK WITH DSM - DELIVER RESERVE
NS-NB=200; NB-NE=500; CBX=790; ONI=1015 ONS=704
1 PHASE FAULT HOPEWELL L6507, CLEARED IN 6 CY
BBU ON BREAKER 600 CLEARS THE STATION - 1 UNIT SPS
FILE: c101s-79N-606_BBU_mrec-2013WP-DSM-NS-200.out
CHNL# 119: [VARS IR141-DIGBY]
CHNL# 118: [VARS IR137-STATIA]
CHNL# 117: [VARS IR114-GLENDHU]
CHNL# 116: [VARS IR84-DALHOUSIE]
CHNL# 115: [VARS IR82_NUTTBY]
CHNL# 114: [VARS IR45_AMHERST]
TIME (SECONDS)
SAT, JAN 31 2009 15:42
NS WIND MV

2013 WINTER PEAK WITH DSM - DELIVER RESERVE
NS-NB=200; NB-NE=500; CBX=790; ONI=1015 ONS=704
1 PHASE FAULT HOPEWELL L6507, CLEARED IN 6 CY
BBU ON BREAKER 600 CLEARS THE STATION - 1 UNIT SPS
FILE: c101s-79N-606_BBU_mrec-2013WP-DSM-NS-200.out
CHNL# 79: [POWER IR141-DIGBY]
CHNL# 78: [POWER IR137-STATIA]
CHNL# 77: [POWER IR114-GLENDHU]
CHNL# 76: [POWER IR84-DALHOUSIE]
CHNL# 75: [POWER IR82_NUTTBY]
CHNL# 74: [POWER IR45_AMHERST]
TIME (SECONDS)
SAT, JAN 31 2009 15:42
NS WIND MW

2013 WINTER PEAK WITH DSM - DELIVER RESERVE
NS-NB=200; NB-NE=500; CBX=790; ONI=1015 ONS=704
1 PHASE FAULT HOPEWELL L6507, CLEARED IN 6 CY
BBU ON BREAKER 600 CLEARS THE STATION - 1 UNIT SPS
FILE: c101s-79N-606_BBU_mrec-2013WP-DSM-NS-200.out
CHNL# 133: [VOLT199125 IONSLOW 345.00]
CHNL# 132: [VOLT199120 IHOPEWELL345.00]
CHNL# 131: [VOLT199045 IWOODBINE345.00]
CHNL# 130: [VOLT190320 ISALBRY 345.00]
CHNL# 128: [VOLT190004 IKESWICK 345.00]
CHNL# 127: [VOLT 70002 IORRINGTN345.00]
TIME (SECONDS)
SAT, JAN 31 2009 15:42
"345KV VOLTAGE"

2013 WINTER PEAK WITH DSM - DELIVER RESERVE
NS-NB=200; NB-NE=500; CBX=790; ONI=1015 ONS=704
1 PHASE FAULT HOPEWELL L6507, CLEARED IN 6 CY
BBU ON BREAKER 600 CLEARS THE STATION - 1 UNIT SPS
FILE: c101s-79N-606_BBU_mrec-2013WP-DSM-NS-200.out
CHNL# 125: 60*(1+[FREQ199125 IONSLOW 345.00])
CHNL# 124: 60*(1+[FREQ199120 IHOPEWELL345.00])
CHNL# 123: 60*(1+[FREQ199045 IWOODBINE345.00])
CHNL# 122: 60*(1+[FREQ190320 ISALBRY 345.00])
CHNL# 121: 60*(1+[FREQ190197 IC.COVE 345.00])
CHNL# 120: 60*(1+[FREQ 70002 IORRINGTN345.00])
TIME (SECONDS)
SAT, JAN 31 2009 15:42
FREQUENCY HZ

2013 WINTER PEAK WITH DSM - DELIVER RESERVE
NS-NB=200; NB-NE=500; CBX=790; ONI=1015 ONS=704
1 PHASE FAULT HOPEWELL L6507, CLEARED IN 6 CY
BBU ON BREAKER 600 CLEARS THE STATION - 1 UNIT SPS
FILE: c101s-79N-606_BBU_mecl-2013WP-DSM-NS-200.out
CHNL# 146: [VOLT199280 [TUSKET A138.00]]
CHNL# 145: [VOLT199193 [HHWAS 138.00]]
CHNL# 144: [VOLT199165 [TUFTCOVE138.00]]
CHNL# 143: [VOLT199138 [SPRNGHILL138.00]]
CHNL# 142: [VOLT199090 [SON-TREN138.00]]
CHNL# 141: [VOLT199051 [HASTINGS138.00]]
1.2000
0.70000
0.0
1.0000
2.0000
3.0000
4.0000
5.0000
6.0000
7.0000
8.0000
9.0000
10.000
TIME (SECONDS)
SAT, JAN 31 2009 15:42
138KV BUS VOLTS

2013 WINTER PEAK WITH DSM - DELIVER RESERVE
NS-NB=200; NB-NE=500; CBX=790; ONI=1015 ONS=704
1 PHASE FAULT HOPEWELL L6507, CLEARED IN 6 CY
BBU ON BREAKER 600 CLEARS THE STATION - 1 UNIT SPS
FILE: c101s-79N-606_BBU_mecl-2013WP-DSM-NS-200.out
CHNL# 140: [VOLT199240 [BWATER A230.00]]
CHNL# 139: [VOLT199200 [BRUSHY 230.00]]
CHNL# 138: [VOLT199130 [ONSLOW 230.00]]
CHNL# 137: [VOLT199050 [HASTINGS230.00]]
CHNL# 136: [VOLT199044 [PT.ACONI230.00]]
CHNL# 135: [VOLT199000 [LINGAN 230.00]]
1.2000
0.70000
0.0
1.0000
2.0000
3.0000
4.0000
5.0000
6.0000
7.0000
8.0000
9.0000
10.000
TIME (SECONDS)
SAT, JAN 31 2009 15:42
230KV BUS VOLTS

2013 WINTER PEAK WITH DSM - DELIVER RESERVE
NS-NB=200; NB-NE=500; CBX=790; ONI=1015 ONS=704
1 PHASE FAULT HOPEWELL L6507, CLEARED IN 6 CY
BBU ON BREAKER 600 CLEARS THE STATION - 1 UNIT SPS
FILE: c101s-79N-606_BBU_mecl-2013WP-DSM-NS-200.out
CHNL# 217: [L6513MW]
CHNL# 215: [L6503MW]
CHNL# 197: [L8003MW]
CHNL# 195: [L8004MW]
CHNL# 193: [L8001MW]
CHNL# 221: [L3001MW]
250.00
-250.0
500.00
0.0
1000.0
-1000.
0.0
1.0000
2.0000
3.0000
4.0000
5.0000
6.0000
7.0000
8.0000
9.0000
10.000
TIME (SECONDS)
SAT, JAN 31 2009 15:42
LINE FLOW MW

2013 WINTER PEAK WITH DSM - DELIVER RESERVE
NS-NB=200; NB-NE=500; CBX=790; ONI=1015 ONS=704
1 PHASE FAULT HOPEWELL L6507, CLEARED IN 6 CY
BBU ON BREAKER 600 CLEARS THE STATION - 1 UNIT SPS
FILE: c101s-79N-606_BBU_mecl-2013WP-DSM-NS-200.out
CHNL# 154: [IR141-DIGBYH69.0 VOLTS]
CHNL# 153: [IR137-STATIG25.0 VOLTS]
CHNL# 152: [IR114-GLENDH138.0 VOLTS]
CHNL# 151: [IR84-DALHOHV230.0 VOLTS]
CHNL# 150: [IR82_NUTBHV69.0 VOLTS]
CHNL# 149: [IR45_AMHERTP138.0 VOLTS]
1.2000
0.70000
0.0
1.0000
2.0000
3.0000
4.0000
5.0000
6.0000
7.0000
8.0000
9.0000
10.000
TIME (SECONDS)
SAT, JAN 31 2009 15:42
WIND BUS VOLTS

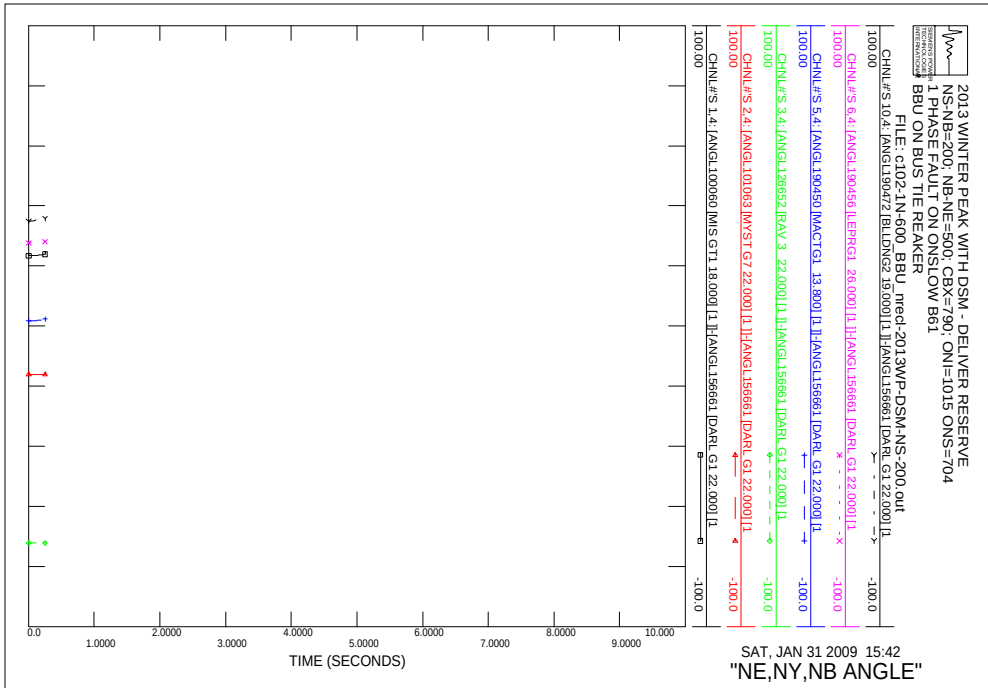
2013 WINTER PEAK WITH DSM - DELIVER RESERVE
NS-NB=200; NB-NE=500; CBX=790; ONI=1015 ONS=704
1 PHASE FAULT ON ONSLOW B61
BBU ON BUS TIE REAKER
FILE: c102-1N-600_BBU_nrecl-2013WP-DSM-NS-200.out
CHNL#S 10,4: [ANGL190472 [BLLDNG2 19.000] [1]]-[ANGL156661 [DARL G1 22.000] [1
CHNL#S 6,4: [ANGL190456 [LEPRG1 26.000] [1]]-[ANGL156661 [DARL G1 22.000] [1
CHNL#S 5,4: [ANGL190450 [MACTG1 13.800] [1]]-[ANGL156661 [DARL G1 22.000] [1
CHNL#S 3,4: [ANGL126652 [RAV 3 22.000] [1]]-[ANGL156661 [DARL G1 22.000] [1
CHNL#S 2,4: [ANGL101063 [MYST G7 22.000] [1]]-[ANGL156661 [DARL G1 22.000] [1
CHNL#S 1,4: [ANGL100060 [MIS GT1 18.000] [1]]-[ANGL156661 [DARL G1 22.000] [1
100.00
-100.0
TIME (SECONDS)
SAT, JAN 31 2009 15:42
"NE,NY,NB ANGLE"

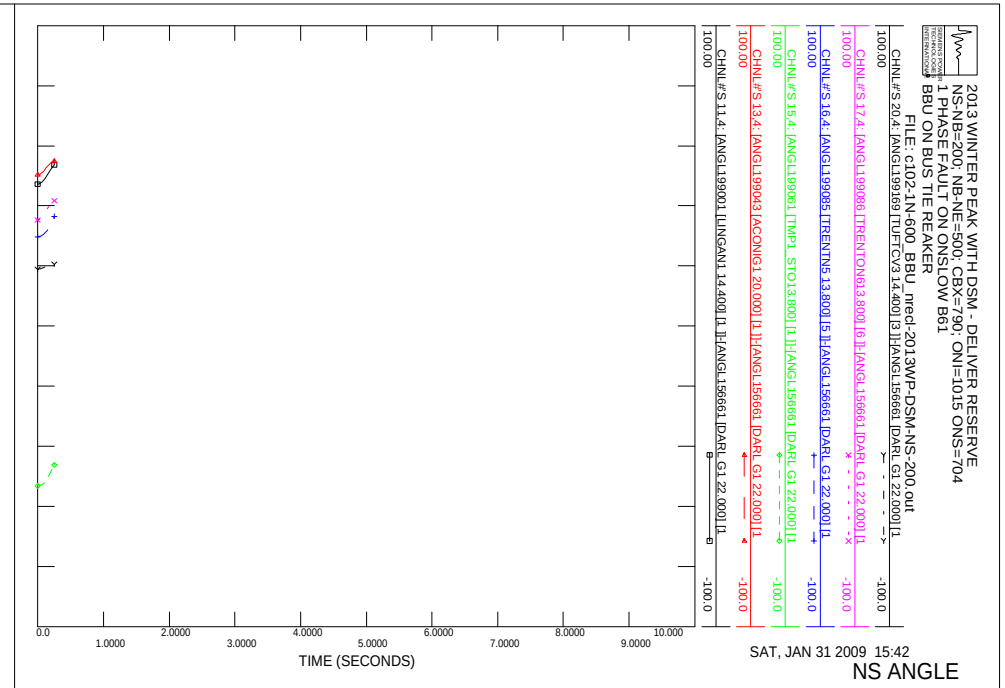
2013 WINTER PEAK WITH DSM - DELIVER RESERVE
NS-NB=200; NB-NE=500; CBX=790; ONI=1015 ONS=704
1 PHASE FAULT ON ONSLOW B61
BBU ON BUS TIE REAKER
FILE: c102-1N-600_BBU_nrecl-2013WP-DSM-NS-200.out
CHNL#S 20,4: [ANGL199169 [TUFTCV3 14.400] [3]]-[ANGL156661 [DARL G1 22.000] [1
CHNL#S 17,4: [ANGL199086 [TRENTON613.800] [6]]-[ANGL156661 [DARL G1 22.000] [1
CHNL#S 16,4: [ANGL199085 [TRENTN5 13.800] [5]]-[ANGL156661 [DARL G1 22.000] [1
CHNL#S 15,4: [ANGL199061 [TMP1 STO13.800] [1]]-[ANGL156661 [DARL G1 22.000] [1
CHNL#S 13,4: [ANGL199043 [ACONIG1 20.000] [1]]-[ANGL156661 [DARL G1 22.000] [1
CHNL#S 11,4: [ANGL199001 [LINGAN1 14.400] [1]]-[ANGL156661 [DARL G1 22.000] [1
100.00
-100.0
TIME (SECONDS)
SAT, JAN 31 2009 15:42
NS ANGLE

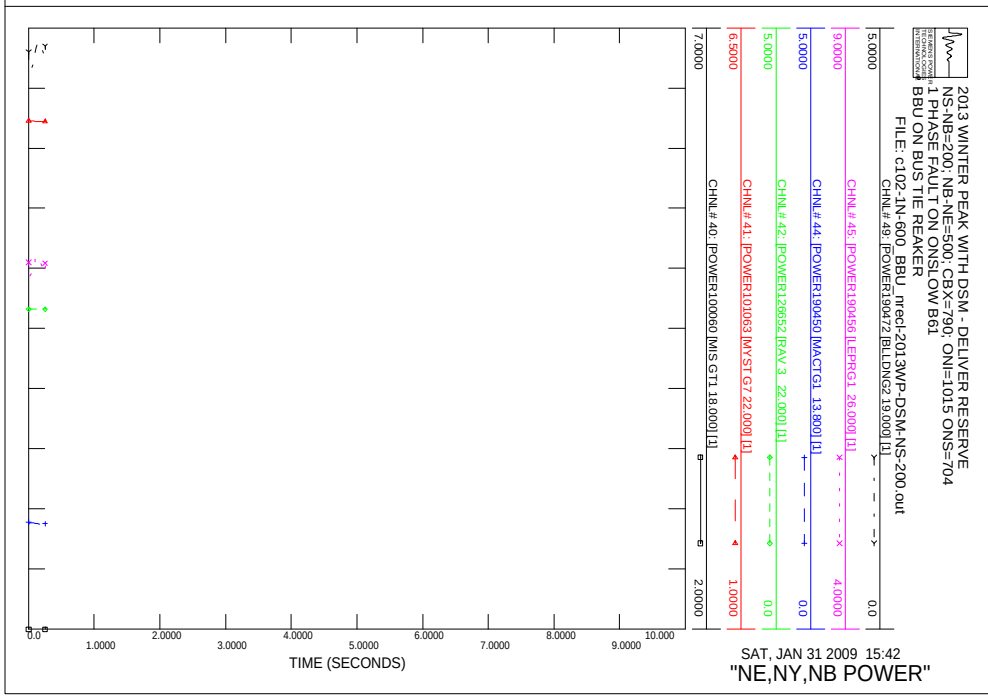
2013 WINTER PEAK WITH DSM - DELIVER RESERVE
NS-NB=200; NB-NE=500; CBX=790; ONI=1015 ONS=704
1 PHASE FAULT ON ONSLOW B61
BBU ON BUS TIE REAKER
FILE: c102-1N-600_BBU_nrecl-2013WP-DSM-NS-200.out
CHNL# 49: [POWER190472 [BLLDNG2 19.000] [1]
CHNL# 45: [POWER190456 [LEPRG1 26.000] [1]
CHNL# 44: [POWER190450 [MACTG1 13.800] [1]
CHNL# 42: [POWER126652 [RAV 3 22.000] [1]
CHNL# 41: [POWER101063 [MYST G7 22.000] [1]
CHNL# 40: [POWER100060 [MIS GT1 18.000] [1]
5.0000
0.0
4.0000
0.0
0.0
1.0000
2.0000
TIME (SECONDS)
SAT, JAN 31 2009 15:42
"NE,NY,NB POWER"

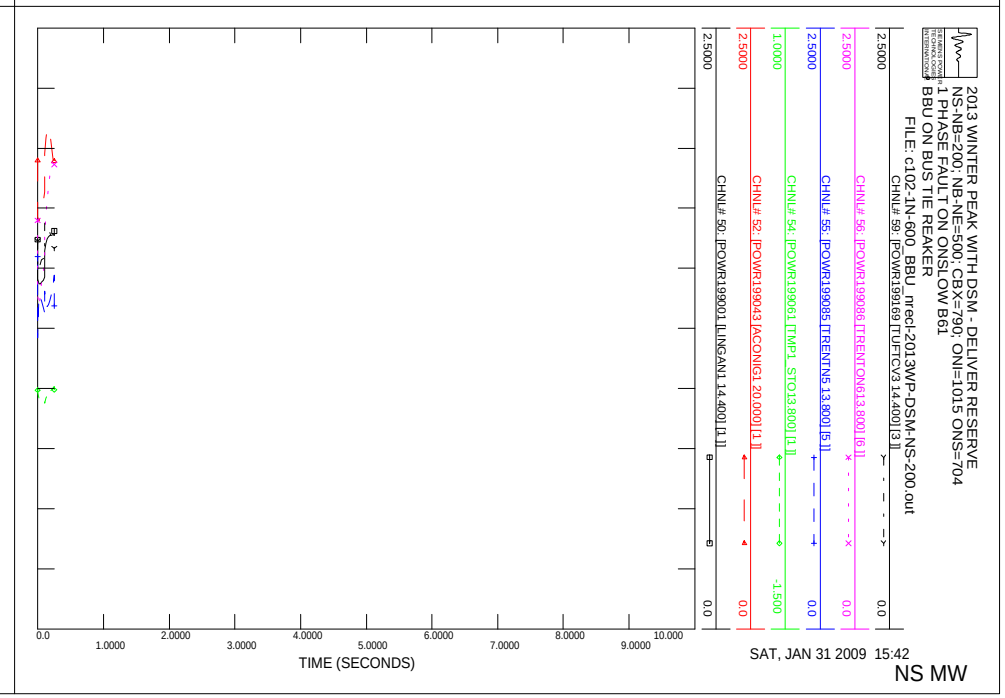
2013 WINTER PEAK WITH DSM - DELIVER RESERVE
NS-NB=200; NB-NE=500; CBX=790; ONI=1015 ONS=704
1 PHASE FAULT ON ONSLOW B61
BBU ON BUS TIE REAKER
FILE: c102-1N-600_BBU_nrecl-2013WP-DSM-NS-200.out
CHNL# 59: [POWR199169 [TUFTCV3 14.400] [3]]
CHNL# 56: [POWR199086 [TRENTON613.800] [6]]
CHNL# 55: [POWR199085 [TRENTN5 13.800] [5]]
CHNL# 54: [POWR199061 [TMP1 STO13.800] [1]]
CHNL# 52: [POWR199043 [ACONIG1 20.000] [1]]
CHNL# 50: [POWR199001 [LINGAN1 14.400] [1]]
2.5000
0.0
-1.500
0.0
0.0
TIME (SECONDS)
SAT, JAN 31 2009 15:42
NS MW

2013 WINTER PEAK WITH DSM - DELIVER RESERVE
NS-NB=200; NB-NE=500; CBX=790; ONI=1015 ONS=704
1 PHASE FAULT ON ONSLOW B61
BBU ON BUS TIE REAKER
FILE: c102-1N-600_BBU_nrecl-2013WP-DSM-NS-200.out
CHNL# 119: [VARS IR141-DIGBY]
CHNL# 118: [VARS IR137-STATIA]
CHNL# 117: [VARS IR114-GLENDHU]
CHNL# 116: [VARS IR84-DALHOUSIE]
CHNL# 115: [VARS IR82_NUTTBY]
CHNL# 114: [VARS IR45_AMHERST]
0.50000
-0.5000
0.0
1.0000
2.0000
3.0000
4.0000
5.0000
6.0000
7.0000
8.0000
9.0000
10.000
TIME (SECONDS)
SAT, JAN 31 2009 15:42
NS WIND MV

2013 WINTER PEAK WITH DSM - DELIVER RESERVE
NS-NB=200; NB-NE=500; CBX=790; ONI=1015 ONS=704
1 PHASE FAULT ON ONSLOW B61
BBU ON BUS TIE REAKER
FILE: c102-1N-600_BBU_nrecl-2013WP-DSM-NS-200.out
CHNL# 79: [POWER IR141-DIGBY]
CHNL# 78: [POWER IR137-STATIA]
CHNL# 77: [POWER IR114-GLENDHU]
CHNL# 76: [POWER IR84-DALHOUSIE]
CHNL# 75: [POWER IR82_NUTTBY]
CHNL# 74: [POWER IR45_AMHERST]
1.0000
0.0
1.0000
2.0000
3.0000
4.0000
5.0000
6.0000
7.0000
8.0000
9.0000
10.000
TIME (SECONDS)
SAT, JAN 31 2009 15:42
NS WIND MW

2013 WINTER PEAK WITH DSM - DELIVER RESERVE
NS-NB=200; NB-NE=500; CBX=790; ONI=1015 ONS=704
1 PHASE FAULT ON ONSLOW B61
BBU ON BUS TIE REAKER
FILE: c102-1N-600_BBU_nrecl-2013WP-DSM-NS-200.out
CHNL# 133: [VOLT199125 IONSLOW 345.00]
CHNL# 132: [VOLT199120 IHOPEWELL345.00]
CHNL# 131: [VOLT199045 IWOODBINE345.00]
CHNL# 130: [VOLT190320 ISALBRY 345.00]
CHNL# 128: [VOLT190004 IKESWICK 345.00]
CHNL# 127: [VOLT 70002 IORRINGTN345.00]
0.90000
1.1000
0.0
1.0000
2.0000
3.0000
4.0000
5.0000
6.0000
7.0000
8.0000
9.0000
10.000
TIME (SECONDS)
SAT, JAN 31 2009 15:42
"345KV VOLTAGE"

2013 WINTER PEAK WITH DSM - DELIVER RESERVE
NS-NB=200; NB-NE=500; CBX=790; ONI=1015 ONS=704
1 PHASE FAULT ON ONSLOW B61
BBU ON BUS TIE REAKER
FILE: c102-1N-600_BBU_nrecl-2013WP-DSM-NS-200.out
CHNL# 125: 60*(1+[FREQ199125 IONSLOW 345.00])
CHNL# 124: 60*(1+[FREQ199120 IHOPEWELL345.00])
CHNL# 123: 60*(1+[FREQ199045 IWOODBINE345.00])
CHNL# 122: 60*(1+[FREQ190320 ISALBRY 345.00])
CHNL# 121: 60*(1+[FREQ190197 IC.COVE 345.00])
CHNL# 120: 60*(1+[FREQ 70002 IORRINGTN345.00])
60.500
59.500
0.0
1.0000
2.0000
3.0000
4.0000
5.0000
6.0000
7.0000
8.0000
9.0000
10.000
TIME (SECONDS)
SAT, JAN 31 2009 15:42
FREQUENCY HZ

2013 WINTER PEAK WITH DSM - DELIVER RESERVE
NS-NB=200; NB-NE=500; CBX=790; ONI=1015 ONS=704
1 PHASE FAULT ON ONSLOW B61
BBU ON BUS TIE REAKER
FILE: c102-1N-600_BBU_nrecl-2013WP-DSM-NS-200.out
CHNL# 146: [VOLT199280 [TUSKET A138.00]]
CHNL# 145: [VOLT199193 [HHWAS 138.00]]
CHNL# 144: [VOLT199165 [TUFTCOVE138.00]]
CHNL# 143: [VOLT199138: [SPRNGHILL138.00]]
CHNL# 142: [VOLT199090 [SON-TREN138.00]]
CHNL# 141: [VOLT199051 [HASTINGS138.00]]
1.2000
0.70000
0.0
1.0000
2.0000
3.0000
4.0000
5.0000
6.0000
7.0000
8.0000
9.0000
10.000
TIME (SECONDS)
SAT, JAN 31 2009 15:42
138KV BUS VOLTS

2013 WINTER PEAK WITH DSM - DELIVER RESERVE
NS-NB=200; NB-NE=500; CBX=790; ONI=1015 ONS=704
1 PHASE FAULT ON ONSLOW B61
BBU ON BUS TIE REAKER
FILE: c102-1N-600_BBU_nrecl-2013WP-DSM-NS-200.out
CHNL# 140: [VOLT199240 [BWATER A230.00]]
CHNL# 139: [VOLT199200 [BRUSHY 230.00]]
CHNL# 138: [VOLT199130 [ONSLOW 230.00]]
CHNL# 137: [VOLT199050 [HASTINGS230.00]]
CHNL# 136: [VOLT199044 [PT.ACONI230.00]]
CHNL# 135: [VOLT199000 [LINGAN 230.00]]
1.2000
0.70000
0.0
1.0000
2.0000
3.0000
4.0000
5.0000
6.0000
7.0000
8.0000
9.0000
10.000
TIME (SECONDS)
SAT, JAN 31 2009 15:42
230KV BUS VOLTS

2013 WINTER PEAK WITH DSM - DELIVER RESERVE
NS-NB=200; NB-NE=500; CBX=790; ONI=1015 ONS=704
1 PHASE FAULT ON ONSLOW B61
BBU ON BUS TIE REAKER
FILE: c102-1N-600_BBU_nrecl-2013WP-DSM-NS-200.out
CHNL# 217: [L6513NMW]
CHNL# 215: [L6503MW1]
CHNL# 197: [L8003MW]
CHNL# 195: [L8004MW1]
CHNL# 193: [L8001MW]
CHNL# 221: [L3001MW1]
250.00
-250.0
500.00
0.0
1000.0
-1000.
TIME (SECONDS)
SAT, JAN 31 2009 15:42
LINE FLOW MW

2013 WINTER PEAK WITH DSM - DELIVER RESERVE
NS-NB=200; NB-NE=500; CBX=790; ONI=1015 ONS=704
1 PHASE FAULT ON ONSLOW B61
BBU ON BUS TIE REAKER
FILE: c102-1N-600_BBU_nrecl-2013WP-DSM-NS-200.out
CHNL# 154: [IR141-DIGBYH69.0 VOLTS]
CHNL# 153: [IR137-STATIG25.0 VOLTS]
CHNL# 152: [IR114-GLENDH138.0 VOLTS]
CHNL# 151: [IR84-DALHOHV230.0 VOLTS]
CHNL# 150: [IR82-NUTBHV69.0 VOLTS]
CHNL# 149: [IR45-AMHERTP138.0 VOLTS]
1.2000
0.70000
0.0
1.0000
2.0000
3.0000
4.0000
5.0000
6.0000
7.0000
8.0000
9.0000
10.000
TIME (SECONDS)
SAT, JAN 31 2009 15:42
WIND BUS VOLTS

2013 WINTER PEAK WITH DSM - DELIVER RESERVE
NS-NB=200; NB-NE=500; CBX=790; ONI=1015 ONS=704
1 PHASE FAULT L6016 AT 120H, BBU ON 120H-622
TRIPS L6016 L6005 IN 14 CYCLES
FILE: c103-120H-622_BBU_mrec-2013WP-DSM-NS-200.out
CHNL# 20: [ANGL199169 [TUFTCV3 14.400] [3]] -100.0
CHNL# 17: [ANGL199086 [TRENTON613.800] [6]] -100.0
CHNL# 16: [ANGL199085 [TRENTN5 13.800] [5]] -100.0
CHNL# 15: [ANGL199061 [TMP1 STO13.800] [1]] -100.0
CHNL# 13: [ANGL199043 [ACONIG1 20.000] [1]] -100.0
CHNL# 11: [ANGL199001 [LINGAN1 14.400] [1]] -100.0
TIME (SECONDS)
SAT, JAN 31 2009 15:42
NS ANGLE

2013 WINTER PEAK WITH DSM - DELIVER RESERVE
NS-NB=200; NB-NE=500; CBX=790; ONI=1015 ONS=704
1 PHASE FAULT L6016 AT 120H, BBU ON 120H-622
TRIPS L6016 L6005 IN 14 CYCLES
FILE: c103-120H-622_BBU_mrec-2013WP-DSM-NS-200.out
CHNL# 10: [ANGL190472 [BLLDNG2 19.000] [1]] -100.0
CHNL# 6: [ANGL190456 [LEPRG1 26.000] [1]] -100.0
CHNL# 5: [ANGL190450 [MACTG1 13.800] [1]] -100.0
CHNL# 3: [ANGL126652 [RAV 3 22.000] [1]] -100.0
CHNL# 2: [ANGL101063 [MYST G7 22.000] [1]] -100.0
CHNL# 1: [ANGL100060 [MIS GT1 18.000] [1]] -100.0
TIME (SECONDS)
SAT, JAN 31 2009 15:42
"NE,NY,NB ANGLE"

2013 WINTER PEAK WITH DSM - DELIVER RESERVE
NS-NB=200; NB-NE=500; CBX=790; ONI=1015 ONS=704
1 PHASE FAULT L6016 AT 120H, BBU ON 120H-622
TRIPS L6016 L6005 IN 14 CYCLES
FILE: c103-120H-622_BBU_mrec-2013WP-DSM-NS-200.out
CHNL# 59: [POWR199169 [TUFTCV3 14.400] [3]] 0.0
CHNL# 56: [POWR199086 [TRENTON613.800] [6]] 0.0
CHNL# 55: [POWR199085 [TRENTN5 13.800] [5]] 0.0
CHNL# 54: [POWR199061 [TMP1 STO13.800] [1]] -1.500
CHNL# 52: [POWR199043 [ACONIG1 20.000] [1]] 0.0
CHNL# 50: [POWR199001 [LINGAN1 14.400] [1]] 0.0
TIME (SECONDS)
SAT, JAN 31 2009 15:42
NS MW

2013 WINTER PEAK WITH DSM - DELIVER RESERVE
NS-NB=200; NB-NE=500; CBX=790; ONI=1015 ONS=704
1 PHASE FAULT L6016 AT 120H, BBU ON 120H-622
TRIPS L6016 L6005 IN 14 CYCLES
FILE: c103-120H-622_BBU_mrec-2013WP-DSM-NS-200.out
CHNL# 49: [POWER190472 [BLLDNG2 19.000] [1]] 0.0
CHNL# 45: [POWER190456 [LEPRG1 26.000] [1]] 4.0000
CHNL# 44: [POWER190450 [MACTG1 13.800] [1]] 0.0
CHNL# 42: [POWER126652 [RAV 3 22.000] [1]] 0.0
CHNL# 41: [POWER101063 [MYST G7 22.000] [1]] 1.0000
CHNL# 40: [POWER100060 [MIS GT1 18.000] [1]] 2.0000
TIME (SECONDS)
SAT, JAN 31 2009 15:42
"NE,NY,NB POWER"

2013 WINTER PEAK WITH DSM - DELIVER RESERVE
NS-NB=200; NB-NE=500; CBX=790; ONI=1015 ONS=704
1 PHASE FAULT L6016 AT 120H, BBU ON 120H-622
TRIPS L6016 L6005 IN 14 CYCLES
FILE: c103-120H-622_BBU_nrecl-2013WP-DSM-NS-200.out
CHNL# 119: [VARS IR141-DIGBY] 0.50000 -0.5000
CHNL# 118: [VARS IR137-STATIA] 0.50000 -0.5000
CHNL# 117: [VARS IR114-GLENDHU] 0.50000 -0.5000
CHNL# 116: [VARS IR84-DALHOUSIE] 0.50000 -0.5000
CHNL# 115: [VARS IR82_NUTTBY] 0.50000 -0.5000
CHNL# 114: [VARS IR45_AMHERST] 0.50000 -0.5000
TIME (SECONDS)
SAT, JAN 31 2009 15:42
NS WIND MV

2013 WINTER PEAK WITH DSM - DELIVER RESERVE
NS-NB=200; NB-NE=500; CBX=790; ONI=1015 ONS=704
1 PHASE FAULT L6016 AT 120H, BBU ON 120H-622
TRIPS L6016 L6005 IN 14 CYCLES
FILE: c103-120H-622_BBU_nrecl-2013WP-DSM-NS-200.out
CHNL# 79: [POWER IR141-DIGBY] 1.0000 0.0
CHNL# 78: [POWER IR137-STATIA] 1.0000 0.0
CHNL# 77: [POWER IR114-GLENDHU] 1.0000 0.0
CHNL# 76: [POWER IR84-DALHOUSIE] 1.0000 0.0
CHNL# 75: [POWER IR82_NUTTBY] 1.0000 0.0
CHNL# 74: [POWER IR45_AMHERST] 1.0000 0.0
TIME (SECONDS)
SAT, JAN 31 2009 15:42
NS WIND MW

2013 WINTER PEAK WITH DSM - DELIVER RESERVE
NS-NB=200; NB-NE=500; CBX=790; ONI=1015 ONS=704
1 PHASE FAULT L6016 AT 120H, BBU ON 120H-622
TRIPS L6016 L6005 IN 14 CYCLES
FILE: c103-120H-622_BBU_nrecl-2013WP-DSM-NS-200.out
CHNL# 133: [VOLT199125 [ONSLOW 345.00]] 1.1000 0.90000
CHNL# 132: [VOLT199120 [HOPEWELL 345.00]] 1.1000 0.90000
CHNL# 131: [VOLT199045 [WOODBINE345.00]] 1.1000 0.90000
CHNL# 130: [VOLT190320 [SALBRY 345.00]] 1.1000 0.90000
CHNL# 128: [VOLT190004 [KESWICK 345.00]] 1.1000 0.90000
CHNL# 127: [VOLT 70002 [ORRINGTN345.00]] 1.1000 0.90000
TIME (SECONDS)
SAT, JAN 31 2009 15:42
"345KV VOLTAGE"

2013 WINTER PEAK WITH DSM - DELIVER RESERVE
NS-NB=200; NB-NE=500; CBX=790; ONI=1015 ONS=704
1 PHASE FAULT L6016 AT 120H, BBU ON 120H-622
TRIPS L6016 L6005 IN 14 CYCLES
FILE: c103-120H-622_BBU_nrecl-2013WP-DSM-NS-200.out
CHNL# 125: 60*(1+[FREQ199125 [ONSLOW 345.00]]) 60.500 59.500
CHNL# 124: 60*(1+[FREQ199120 [HOPEWELL 345.00]]) 60.500 59.500
CHNL# 123: 60*(1+[FREQ199045 [WOODBINE345.00]]) 60.500 59.500
CHNL# 122: 60*(1+[FREQ190320 [SALBRY 345.00]]) 60.500 59.500
CHNL# 121: 60*(1+[FREQ190197 [C.COVE 345.00]]) 60.500 59.500
CHNL# 120: 60*(1+[FREQ 70002 [ORRINGTN345.00]]) 60.500 59.500
TIME (SECONDS)
SAT, JAN 31 2009 15:42
FREQUENCY HZ

2013 WINTER PEAK WITH DSM - DELIVER RESERVE
NS-NB=200; NB-NE=500; CBX=790; ONI=1015 ONS=704
1 PHASE FAULT L6016 AT 120H, BBU ON 120H-622
TRIPS L6016 L6005 IN 14 CYCLES
FILE: c103-120H-622_BBU_mrec-2013WP-DSM-NS-200.out
CHNL# 145: [VOLT199193 [HWAS 138.00]]
CHNL# 144: [VOLT199165 [TUFTCOVE138.00]]
CHNL# 143: [VOLT199135 [SPRNGHIL138.00]]
CHNL# 142: [VOLT199090 [SON-TREN138.00]]
CHNL# 141: [VOLT199051 [HASTINGS138.00]]
TIME (SECONDS)
SAT, JAN 31 2009 15:42
138KV BUS VOLTS

2013 WINTER PEAK WITH DSM - DELIVER RESERVE
NS-NB=200; NB-NE=500; CBX=790; ONI=1015 ONS=704
1 PHASE FAULT L6016 AT 120H, BBU ON 120H-622
TRIPS L6016 L6005 IN 14 CYCLES
FILE: c103-120H-622_BBU_mrec-2013WP-DSM-NS-200.out
CHNL# 139: [VOLT199200 [BRUSHY 230.00]]
CHNL# 138: [VOLT199130 [ONSLOW 230.00]]
CHNL# 137: [VOLT199050 [HASTINGS230.00]]
CHNL# 136: [VOLT199044 [PT.ACONI230.00]]
CHNL# 135: [VOLT199000 [LINGAN 230.00]]
TIME (SECONDS)
SAT, JAN 31 2009 15:42
230KV BUS VOLTS

2013 WINTER PEAK WITH DSM - DELIVER RESERVE
NS-NB=200; NB-NE=500; CBX=790; ONI=1015 ONS=704
1 PHASE FAULT L6016 AT 120H, BBU ON 120H-622
TRIPS L6016 L6005 IN 14 CYCLES
FILE: c103-120H-622_BBU_mrec-2013WP-DSM-NS-200.out
CHNL# 217: [L6533MW]
CHNL# 215: [L6503MW]
CHNL# 197: [L8003MW]
CHNL# 195: [L8004MW]
CHNL# 193: [L8001MW]
CHNL# 221: [L3001MW]
TIME (SECONDS)
SAT, JAN 31 2009 15:42
LINE FLOW MW

2013 WINTER PEAK WITH DSM - DELIVER RESERVE
NS-NB=200; NB-NE=500; CBX=790; ONI=1015 ONS=704
1 PHASE FAULT L6016 AT 120H, BBU ON 120H-622
TRIPS L6016 L6005 IN 14 CYCLES
FILE: c103-120H-622_BBU_mrec-2013WP-DSM-NS-200.out
CHNL# 154: [IR141-DIGBYH69.0 VOLTS]
CHNL# 153: [IR137-STATIG25.0 VOLTS]
CHNL# 152: [IR114-GLENDH138.0 VOLTS]
CHNL# 151: [IR84-DALHOHV230.0 VOLTS]
CHNL# 150: [IR82 NUTBHV69.0 VOLTS]
CHNL# 149: [IR45 AMHERTP138.0 VOLTS]
TIME (SECONDS)
SAT, JAN 31 2009 15:42
WIND BUS VOLTS

2013 WINTER PEAK WITH DSM - DELIVER RESERVE
NS-NB=200; NB-NE=500; CBX=790; ONI=1015 ONS=704
1 PHASE FAULT L6033 AT 103H, CLEARED 1H IN 6 CY
103H-632 FAILS, BUS B61 CLEARS
FILE: c104-103H-632_BBU_mrecl-2013WP-DSM-NS-200.out
CHNL#S 20:4 [ANGL199169 [TUFTCV3 14.400] [3]] [ANGL156661 [DARL G1 22.000] [1] -100.0 100.00
CHNL#S 17:4 [ANGL199086 [TRENTON613.800] [6]] [ANGL156661 [DARL G1 22.000] [1] -100.0 100.00
CHNL#S 16:4 [ANGL199085 [TRENTN5 13.800] [5]] [ANGL156661 [DARL G1 22.000] [1] -100.0 100.00
CHNL#S 15:4 [ANGL199061 [TMP1 STO13.800] [1]] [ANGL156661 [DARL G1 22.000] [1] -100.0 100.00
CHNL#S 13:4 [ANGL199043 [ACONIG1 20.000] [1]] [ANGL156661 [DARL G1 22.000] [1] -100.0 100.00
CHNL#S 11:4 [ANGL199001 [LINGAN1 14.400] [1]] [ANGL156661 [DARL G1 22.000] [1] -100.0 100.00
0.0 1.0000 2.0000 3.0000 4.0000 5.0000 6.0000 7.0000 8.0000 9.0000 10.000
TIME (SECONDS)
SAT, JAN 31 2009 15:42
NS ANGLE

2013 WINTER PEAK WITH DSM - DELIVER RESERVE
NS-NB=200; NB-NE=500; CBX=790; ONI=1015 ONS=704
1 PHASE FAULT L6033 AT 103H, CLEARED 1H IN 6 CY
103H-632 FAILS, BUS B61 CLEARS
FILE: c104-103H-632_BBU_mrecl-2013WP-DSM-NS-200.out
CHNL#S 10:4 [ANGL190472 [BLLDNG2 19.000] [1]] [ANGL156661 [DARL G1 22.000] [1] -100.0 100.00
CHNL#S 6:4 [ANGL190456 [LEPRG1 26.000] [1]] [ANGL156661 [DARL G1 22.000] [1] -100.0 100.00
CHNL#S 5:4 [ANGL190450 [MACTG1 13.800] [1]] [ANGL156661 [DARL G1 22.000] [1] -100.0 100.00
CHNL#S 3:4 [ANGL126652 [RAV 3 22.000] [1]] [ANGL156661 [DARL G1 22.000] [1] -100.0 100.00
CHNL#S 2:4 [ANGL101063 [MYST G7 22.000] [1]] [ANGL156661 [DARL G1 22.000] [1] -100.0 100.00
CHNL#S 1:4 [ANGL100060 [MIS GT1 18.000] [1]] [ANGL156661 [DARL G1 22.000] [1] -100.0 100.00
0.0 1.0000 2.0000 3.0000 4.0000 5.0000 6.0000 7.0000 8.0000 9.0000 10.000
TIME (SECONDS)
SAT, JAN 31 2009 15:42
"NE,NY,NB ANGLE"

2013 WINTER PEAK WITH DSM - DELIVER RESERVE
NS-NB=200; NB-NE=500; CBX=790; ONI=1015 ONS=704
1 PHASE FAULT L6033 AT 103H, CLEARED 1H IN 6 CY
103H-632 FAILS, BUS B61 CLEARS
FILE: c104-103H-632_BBU_mrecl-2013WP-DSM-NS-200.out
CHNL# 59: [POWER199169 [TUFTCV3 14.400] [3]] 0.0 2.5000
CHNL# 56: [POWER199086 [TRENTON613.800] [6]] 0.0 2.5000
CHNL# 55: [POWER199085 [TRENTN5 13.800] [5]] 0.0 2.5000
CHNL# 54: [POWER199061 [TMP1 STO13.800] [1]] -1.500 1.0000
CHNL# 52: [POWER199043 [ACONIG1 20.000] [1]] 0.0 2.5000
CHNL# 50: [POWER199001 [LINGAN1 14.400] [1]] 0.0 2.5000
0.0 1.0000 2.0000 3.0000 4.0000 5.0000 6.0000 7.0000 8.0000 9.0000 10.000
TIME (SECONDS)
SAT, JAN 31 2009 15:42
NS MW

2013 WINTER PEAK WITH DSM - DELIVER RESERVE
NS-NB=200; NB-NE=500; CBX=790; ONI=1015 ONS=704
1 PHASE FAULT L6033 AT 103H, CLEARED 1H IN 6 CY
103H-632 FAILS, BUS B61 CLEARS
FILE: c104-103H-632_BBU_mrecl-2013WP-DSM-NS-200.out
CHNL# 49: [POWER190472 [BLLDNG2 19.000] [1]] 0.0 5.0000
CHNL# 45: [POWER190456 [LEPRG1 26.000] [1]] 4.0000 9.0000
CHNL# 44: [POWER190450 [MACTG1 13.800] [1]] 0.0 5.0000
CHNL# 42: [POWER126652 [RAV 3 22.000] [1]] 0.0 5.0000
CHNL# 41: [POWER101063 [MYST G7 22.000] [1]] 1.0000 6.5000
CHNL# 40: [POWER100060 [MIS GT1 18.000] [1]] 2.0000 7.0000
0.0 1.0000 2.0000 3.0000 4.0000 5.0000 6.0000 7.0000 8.0000 9.0000 10.000
TIME (SECONDS)
SAT, JAN 31 2009 15:42
"NE,NY,NB POWER"

2013 WINTER PEAK WITH DSM - DELIVER RESERVE
NS-NB=200; NB-NE=500; CBX=790; ONI=1015 ONS=704
1 PHASE FAULT L6033 AT 103H, CLEARED 1H IN 6 CY
103H-632 FAILS, BUS B61 CLEARS
FILE: c104-103H-632_BBU_mrecl-2013WP-DSM-NS-200.out
CHNL# 119: [VARS IR141-DIGBY]
CHNL# 118: [VARS IR137-STATIA]
CHNL# 117: [VARS IR114-GLENDHU]
CHNL# 116: [VARS IR84-DALHOUSIE]
CHNL# 115: [VARS IR82_NUTTBY]
CHNL# 114: [VARS IR45_AMHERST]
0.50000
-0.5000
0.0
1.0000
2.0000
3.0000
4.0000
5.0000
6.0000
7.0000
8.0000
9.0000
10.000
TIME (SECONDS)
SAT, JAN 31 2009 15:42
NS WIND MV

2013 WINTER PEAK WITH DSM - DELIVER RESERVE
NS-NB=200; NB-NE=500; CBX=790; ONI=1015 ONS=704
1 PHASE FAULT L6033 AT 103H, CLEARED 1H IN 6 CY
103H-632 FAILS, BUS B61 CLEARS
FILE: c104-103H-632_BBU_mrecl-2013WP-DSM-NS-200.out
CHNL# 79: [POWER IR141-DIGBY]
CHNL# 78: [POWER IR137-STATIA]
CHNL# 77: [POWER IR114-GLENDHU]
CHNL# 76: [POWER IR84-DALHOUSIE]
CHNL# 75: [POWER IR82_NUTTBY]
CHNL# 74: [POWER IR45_AMHERST]
1.0000
0.0
0.0
1.0000
2.0000
3.0000
4.0000
5.0000
6.0000
7.0000
8.0000
9.0000
10.000
TIME (SECONDS)
SAT, JAN 31 2009 15:42
NS WIND MW

2013 WINTER PEAK WITH DSM - DELIVER RESERVE
NS-NB=200; NB-NE=500; CBX=790; ONI=1015 ONS=704
1 PHASE FAULT L6033 AT 103H, CLEARED 1H IN 6 CY
103H-632 FAILS, BUS B61 CLEARS
FILE: c104-103H-632_BBU_mrecl-2013WP-DSM-NS-200.out
CHNL# 133: [VOLT199125 IONSLOW 345.00]
CHNL# 132: [VOLT199120 IHOPEWELL345.00]
CHNL# 131: [VOLT199045 IWOODBINE345.00]
CHNL# 130: [VOLT190320 ISALBRY 345.00]
CHNL# 128: [VOLT190004 IKESWICK 345.00]
CHNL# 127: [VOLT 70002 IORRINGTN345.00]
1.1000
0.90000
1.0000
2.0000
3.0000
4.0000
5.0000
6.0000
7.0000
8.0000
9.0000
10.000
TIME (SECONDS)
SAT, JAN 31 2009 15:42
"345KV VOLTAGE"

2013 WINTER PEAK WITH DSM - DELIVER RESERVE
NS-NB=200; NB-NE=500; CBX=790; ONI=1015 ONS=704
1 PHASE FAULT L6033 AT 103H, CLEARED 1H IN 6 CY
103H-632 FAILS, BUS B61 CLEARS
FILE: c104-103H-632_BBU_mrecl-2013WP-DSM-NS-200.out
CHNL# 125: 60*(1+[FREQ199125 IONSLOW 345.00])
CHNL# 124: 60*(1+[FREQ199120 IHOPEWELL345.00])
CHNL# 123: 60*(1+[FREQ199045 IWOODBINE345.00])
CHNL# 122: 60*(1+[FREQ190320 ISALBRY 345.00])
CHNL# 121: 60*(1+[FREQ190197 IC.COVE 345.00])
CHNL# 120: 60*(1+[FREQ 70002 IORRINGTN345.00])
60.500
59.500
0.0
1.0000
2.0000
3.0000
4.0000
5.0000
6.0000
7.0000
8.0000
9.0000
10.000
TIME (SECONDS)
SAT, JAN 31 2009 15:42
FREQUENCY HZ

2013 WINTER PEAK WITH DSM - DELIVER RESERVE
NS-NB=200; NB-NE=500; CBX=790; ONI=1015 ONS=704
1 PHASE FAULT L6033 AT 103H, CLEARED 1H IN 6 CY
103H-632 FAILS, BUS B61 CLEARS
FILE: c104-103H-632_BBU_mecl-2013WP-DSM-NS-200.out
CHNL# 146: [VOLT199280 [TUSKET A138.00]]
CHNL# 145: [VOLT199193 [HHWAS 138.00]]
CHNL# 144: [VOLT199165 [TUFTCOVE138.00]]
CHNL# 143: [VOLT199135 [SPRNGHIL138.00]]
CHNL# 142: [VOLT199090 [SON-TREN138.00]]
CHNL# 141: [VOLT199051 [HASTINGS138.00]]
1.2000
0.70000
0.0
1.0000
2.0000
3.0000
4.0000
5.0000
6.0000
7.0000
8.0000
9.0000
10.000
TIME (SECONDS)
SAT, JAN 31 2009 15:42
138KV BUS VOLTS

2013 WINTER PEAK WITH DSM - DELIVER RESERVE
NS-NB=200; NB-NE=500; CBX=790; ONI=1015 ONS=704
1 PHASE FAULT L6033 AT 103H, CLEARED 1H IN 6 CY
103H-632 FAILS, BUS B61 CLEARS
FILE: c104-103H-632_BBU_mecl-2013WP-DSM-NS-200.out
CHNL# 140: [VOLT199240 [BWATER A230.00]]
CHNL# 139: [VOLT199200 [BRUSHY 230.00]]
CHNL# 138: [VOLT199130 [ONSLOW 230.00]]
CHNL# 137: [VOLT199050 [HASTINGS230.00]]
CHNL# 136: [VOLT199044 [PT.ACONI230.00]]
CHNL# 135: [VOLT199000 [LINGAN 230.00]]
1.2000
0.70000
0.0
1.0000
2.0000
3.0000
4.0000
5.0000
6.0000
7.0000
8.0000
9.0000
10.000
TIME (SECONDS)
SAT, JAN 31 2009 15:42
230KV BUS VOLTS

2013 WINTER PEAK WITH DSM - DELIVER RESERVE
NS-NB=200; NB-NE=500; CBX=790; ONI=1015 ONS=704
1 PHASE FAULT L6033 AT 103H, CLEARED 1H IN 6 CY
103H-632 FAILS, BUS B61 CLEARS
FILE: c104-103H-632_BBU_mecl-2013WP-DSM-NS-200.out
CHNL# 217: [L6533MW]
CHNL# 215: [L6503MW]
CHNL# 197: [L8003MW]
CHNL# 195: [L8004MW]
CHNL# 193: [L8001MW]
CHNL# 221: [L3001MW]
250.00
500.00
1000.0
0.0
-250.0
-1000.
0.0
1.0000
2.0000
3.0000
4.0000
5.0000
6.0000
7.0000
8.0000
9.0000
10.000
TIME (SECONDS)
SAT, JAN 31 2009 15:42
LINE FLOW MW

2013 WINTER PEAK WITH DSM - DELIVER RESERVE
NS-NB=200; NB-NE=500; CBX=790; ONI=1015 ONS=704
1 PHASE FAULT L6033 AT 103H, CLEARED 1H IN 6 CY
103H-632 FAILS, BUS B61 CLEARS
FILE: c104-103H-632_BBU_mecl-2013WP-DSM-NS-200.out
CHNL# 154: [IR141-DIGBYH69.0 VOLTS]
CHNL# 153: [IR137-STATIG25.0 VOLTS]
CHNL# 152: [IR114-GLENDH138.0 VOLTS]
CHNL# 151: [IR84-DALHOHV230.0 VOLTS]
CHNL# 150: [IR82 NUTBHV69.0 VOLTS]
CHNL# 149: [IR45 AMHERTP138.0 VOLTS]
1.2000
0.70000
0.0
1.0000
2.0000
3.0000
4.0000
5.0000
6.0000
7.0000
8.0000
9.0000
10.000
TIME (SECONDS)
SAT, JAN 31 2009 15:42
WIND BUS VOLTS

2013 WINTER PEAK WITH DSM - DELIVER RESERVE
NS-NB=200; NB-NE=500; CBX=790; ONI=1015 ONS=704
1 PHASE FAULT L6010 AT 90H, 120H END CLEARED IN 6 CY
BBU ON 90H-608 TRIPS L6005 IN 14 CYCLES
FILE: c105-90H-608_BBU_mec-2013WP-DSM-NS-200.out
CHNL# 20: [ANGL199169 [TUFTCV3 14.400] [3]] [ANGL156661 [DARL G1 22.000] [1]
CHNL# 17: [ANGL199086 [TRENTON613.800] [6]] [ANGL156661 [DARL G1 22.000] [1]
CHNL# 16: [ANGL199085 [TRENTN5 13.800] [5]] [ANGL156661 [DARL G1 22.000] [1]
CHNL# 15: [ANGL199061 [TMP1 STO13.800] [1]] [ANGL156661 [DARL G1 22.000] [1]
CHNL# 13: [ANGL199043 [ACONIG1 20.000] [1]] [ANGL156661 [DARL G1 22.000] [1]
CHNL# 11: [ANGL199001 [LINGAN1 14.400] [1]] [ANGL156661 [DARL G1 22.000] [1]
TIME (SECONDS)
SAT, JAN 31 2009 15:42
NS ANGLE

2013 WINTER PEAK WITH DSM - DELIVER RESERVE
NS-NB=200; NB-NE=500; CBX=790; ONI=1015 ONS=704
1 PHASE FAULT L6010 AT 90H, 120H END CLEARED IN 6 CY
BBU ON 90H-608 TRIPS L6005 IN 14 CYCLES
FILE: c105-90H-608_BBU_mec-2013WP-DSM-NS-200.out
CHNL# 10: [ANGL190472 [BLLDNG2 19.000] [1]] [ANGL156661 [DARL G1 22.000] [1]
CHNL# 6: [ANGL190456 [LEPRG1 26.000] [1]] [ANGL156661 [DARL G1 22.000] [1]
CHNL# 5: [ANGL190450 [MACTG1 13.800] [1]] [ANGL156661 [DARL G1 22.000] [1]
CHNL# 3: [ANGL126652 [RAV 3 22.000] [1]] [ANGL156661 [DARL G1 22.000] [1]
CHNL# 2: [ANGL101063 [MYST G7 22.000] [1]] [ANGL156661 [DARL G1 22.000] [1]
CHNL# 1: [ANGL100060 [MIS GT1 18.000] [1]] [ANGL156661 [DARL G1 22.000] [1]
TIME (SECONDS)
SAT, JAN 31 2009 15:42
"NE,NY,NB ANGLE"

2013 WINTER PEAK WITH DSM - DELIVER RESERVE
NS-NB=200; NB-NE=500; CBX=790; ONI=1015 ONS=704
1 PHASE FAULT L6010 AT 90H, 120H END CLEARED IN 6 CY
BBU ON 90H-608 TRIPS L6005 IN 14 CYCLES
FILE: c105-90H-608_BBU_mec-2013WP-DSM-NS-200.out
CHNL# 59: [POWER199169 [TUFTCV3 14.400] [3]]
CHNL# 56: [POWER199086 [TRENTON613.800] [6]]
CHNL# 55: [POWER199085 [TRENTN5 13.800] [5]]
CHNL# 54: [POWER199061 [TMP1 STO13.800] [1]]
CHNL# 52: [POWER199043 [ACONIG1 20.000] [1]]
CHNL# 50: [POWER199001 [LINGAN1 14.400] [1]]
TIME (SECONDS)
SAT, JAN 31 2009 15:42
NS MW

2013 WINTER PEAK WITH DSM - DELIVER RESERVE
NS-NB=200; NB-NE=500; CBX=790; ONI=1015 ONS=704
1 PHASE FAULT L6010 AT 90H, 120H END CLEARED IN 6 CY
BBU ON 90H-608 TRIPS L6005 IN 14 CYCLES
FILE: c105-90H-608_BBU_mec-2013WP-DSM-NS-200.out
CHNL# 49: [POWER190472 [BLLDNG2 19.000] [1]]
CHNL# 45: [POWER190456 [LEPRG1 26.000] [1]]
CHNL# 44: [POWER190450 [MACTG1 13.800] [1]]
CHNL# 42: [POWER126652 [RAV 3 22.000] [1]]
CHNL# 41: [POWER101063 [MYST G7 22.000] [1]]
CHNL# 40: [POWER100060 [MIS GT1 18.000] [1]]
TIME (SECONDS)
SAT, JAN 31 2009 15:42
"NE,NY,NB POWER"

2013 WINTER PEAK WITH DSM - DELIVER RESERVE
NS-NB=200; NB-NE=500; CBX=790; ONI=1015 ONS=704
1 PHASE FAULT L6010 AT 90H, 120H END CLEARED IN 6 CY
BBU ON 90H-608 TRIPS L6005 IN 14 CYCLES
FILE: c105-90H-608_BBU_nrecl-2013WP-DSM-NS-200.out
CHNL# 114: [VARS IR45_AMHERST]
CHNL# 115: [VARS IR82_NUTTBY]
CHNL# 116: [VARS IR84-DALHOUSIE]
CHNL# 117: [VARS IR114-GLENDHU]
CHNL# 118: [VARS IR137-STATIA]
CHNL# 119: [VARS IR141-DIGBY]
TIME (SECONDS)
SAT, JAN 31 2009 15:42
NS WIND MV

2013 WINTER PEAK WITH DSM - DELIVER RESERVE
NS-NB=200; NB-NE=500; CBX=790; ONI=1015 ONS=704
1 PHASE FAULT L6010 AT 90H, 120H END CLEARED IN 6 CY
BBU ON 90H-608 TRIPS L6005 IN 14 CYCLES
FILE: c105-90H-608_BBU_nrecl-2013WP-DSM-NS-200.out
CHNL# 74: [POWER IR45_AMHERST]
CHNL# 75: [POWER IR82_NUTTBY]
CHNL# 76: [POWER IR84-DALHOUSIE]
CHNL# 77: [POWER IR114-GLENDHU]
CHNL# 78: [POWER IR137-STATIA]
CHNL# 79: [POWER IR141-DIGBY]
TIME (SECONDS)
SAT, JAN 31 2009 15:42
NS WIND MW

2013 WINTER PEAK WITH DSM - DELIVER RESERVE
NS-NB=200; NB-NE=500; CBX=790; ONI=1015 ONS=704
1 PHASE FAULT L6010 AT 90H, 120H END CLEARED IN 6 CY
BBU ON 90H-608 TRIPS L6005 IN 14 CYCLES
FILE: c105-90H-608_BBU_nrecl-2013WP-DSM-NS-200.out
CHNL# 127: [VOLT 70002 [ORRINGTN345.00]]
CHNL# 128: [VOLT190004 [KESWICK 345.00]]
CHNL# 130: [VOLT190320 [SALBRY 345.00]]
CHNL# 131: [VOLT199045 [WOODBINE345.00]]
CHNL# 132: [VOLT199120 [HOPEWELL345.00]]
CHNL# 133: [VOLT199125 [ONSLOW 345.00]]
TIME (SECONDS)
SAT, JAN 31 2009 15:42
"345KV VOLTAGE"

2013 WINTER PEAK WITH DSM - DELIVER RESERVE
NS-NB=200; NB-NE=500; CBX=790; ONI=1015 ONS=704
1 PHASE FAULT L6010 AT 90H, 120H END CLEARED IN 6 CY
BBU ON 90H-608 TRIPS L6005 IN 14 CYCLES
FILE: c105-90H-608_BBU_nrecl-2013WP-DSM-NS-200.out
CHNL# 120: 60*(1+[FREQ 70002 [ORRINGTN345.00]])
CHNL# 121: 60*(1+[FREQ190197 [C.COVE 345.00]])
CHNL# 122: 60*(1+[FREQ190320 [SALBRY 345.00]])
CHNL# 123: 60*(1+[FREQ199045 [WOODBINE345.00]])
CHNL# 124: 60*(1+[FREQ199120 [HOPEWELL345.00]])
CHNL# 125: 60*(1+[FREQ199125 [ONSLOW 345.00]])
TIME (SECONDS)
SAT, JAN 31 2009 15:42
FREQUENCY HZ

2013 WINTER PEAK WITH DSM - DELIVER RESERVE
NS-NB=200; NB-NE=500; CBX=790; ONI=1015 ONS=704
1 PHASE FAULT L6010 AT 90H, 120H END CLEARED IN 6 CY
BBU ON 90H-608 TRIPS L6005 IN 14 CYCLES
FILE: c105-90H-608_BBU_nrecl-2013WP-DSM-NS-200.out
CHNL# 146: [VOLT199280 [TUSKET A138.00]]
CHNL# 145: [VOLT199193 [HHWAS 138.00]]
CHNL# 144: [VOLT199165 [TUFTCOVE138.00]]
CHNL# 143: [VOLT199138: [SPRNGHILL138.00]]
CHNL# 142: [VOLT199090 [SON-TREN138.00]]
CHNL# 141: [VOLT199051 [HASTINGS138.00]]
1.2000
0.70000
0.0
1.0000
2.0000
3.0000
4.0000
5.0000
6.0000
7.0000
8.0000
9.0000
10.000
TIME (SECONDS)
SAT, JAN 31 2009 15:42
138KV BUS VOLTS

2013 WINTER PEAK WITH DSM - DELIVER RESERVE
NS-NB=200; NB-NE=500; CBX=790; ONI=1015 ONS=704
1 PHASE FAULT L6010 AT 90H, 120H END CLEARED IN 6 CY
BBU ON 90H-608 TRIPS L6005 IN 14 CYCLES
FILE: c105-90H-608_BBU_nrecl-2013WP-DSM-NS-200.out
CHNL# 140: [VOLT199240 [BWATER A230.00]]
CHNL# 139: [VOLT199200 [BRUSHY 230.00]]
CHNL# 138: [VOLT199130 [ONSLOW 230.00]]
CHNL# 137: [VOLT199050 [HASTINGS230.00]]
CHNL# 136: [VOLT199044 [PT.ACONI230.00]]
CHNL# 135: [VOLT199000 [LINGAN 230.00]]
1.2000
0.70000
0.0
1.0000
2.0000
3.0000
4.0000
5.0000
6.0000
7.0000
8.0000
9.0000
10.000
TIME (SECONDS)
SAT, JAN 31 2009 15:42
230KV BUS VOLTS

2013 WINTER PEAK WITH DSM - DELIVER RESERVE
NS-NB=200; NB-NE=500; CBX=790; ONI=1015 ONS=704
1 PHASE FAULT L6010 AT 90H, 120H END CLEARED IN 6 CY
BBU ON 90H-608 TRIPS L6005 IN 14 CYCLES
FILE: c105-90H-608_BBU_nrecl-2013WP-DSM-NS-200.out
CHNL# 217: [L6533MW]
CHNL# 215: [L6503MW]
CHNL# 197: [L8003MW]
CHNL# 195: [L8004MW]
CHNL# 193: [L8001MW]
CHNL# 221: [L3001MW]
250.00
-250.0
500.00
0.0
1000.0
-1000.
0.0
1.0000
2.0000
3.0000
4.0000
5.0000
6.0000
7.0000
8.0000
9.0000
10.000
TIME (SECONDS)
SAT, JAN 31 2009 15:42
LINE FLOW MW

2013 WINTER PEAK WITH DSM - DELIVER RESERVE
NS-NB=200; NB-NE=500; CBX=790; ONI=1015 ONS=704
1 PHASE FAULT L6010 AT 90H, 120H END CLEARED IN 6 CY
BBU ON 90H-608 TRIPS L6005 IN 14 CYCLES
FILE: c105-90H-608_BBU_nrecl-2013WP-DSM-NS-200.out
CHNL# 154: [IR141-DIGBYH69.0 VOLTS]
CHNL# 153: [IR137-STATIG25.0 VOLTS]
CHNL# 152: [IR114-GLENDH138.0 VOLTS]
CHNL# 151: [IR84-DALHOHV230.0 VOLTS]
CHNL# 150: [IR82 NUTBHV69.0 VOLTS]
CHNL# 149: [IR45 AMHERTP138.0 VOLTS]
1.2000
0.70000
0.0
1.0000
2.0000
3.0000
4.0000
5.0000
6.0000
7.0000
8.0000
9.0000
10.000
TIME (SECONDS)
SAT, JAN 31 2009 15:42
WIND BUS VOLTS

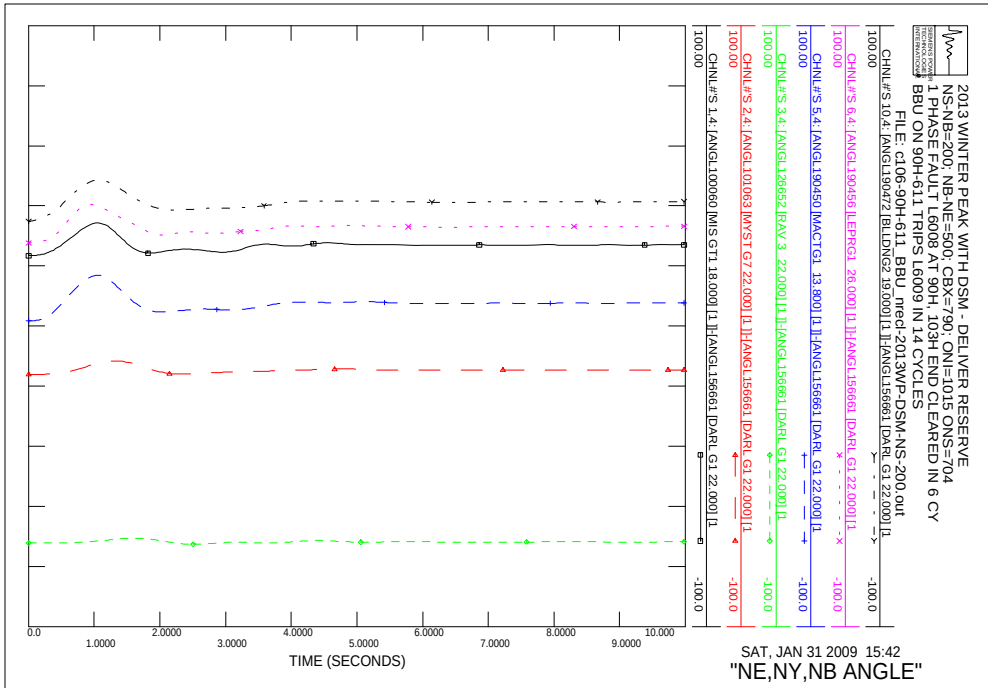
2013 WINTER PEAK WITH DSM - DELIVER RESERVE
NS-NB=200; NB-NE=500; CBX=790; ONI=1015 ONS=704
1 PHASE FAULT L6008 AT 90H, 103H END CLEARED IN 6 CY
BBU ON 90H-611 TRIPS L6009 IN 14 CYCLES
FILE: c106-90H-611_BBU_nrecl-2013WP-DSM-NS-200.out
CHNL#'S 10,4: [ANGL190472 [BLLDNG2 19.000] [1]]-[ANGL156661 [DARL G1 22.000] [1
CHNL#'S 6,4: [ANGL190456 [LEPRG1 26.000] [1]]-[ANGL156661 [DARL G1 22.000] [1
CHNL#'S 5,4: [ANGL190450 [MACTG1 13.800] [1]]-[ANGL156661 [DARL G1 22.000] [1
CHNL#'S 3,4: [ANGL126652 [RAV 3 22.000] [1]]-[ANGL156661 [DARL G1 22.000] [1
CHNL#'S 2,4: [ANGL101063 [MYST G7 22.000] [1]]-[ANGL156661 [DARL G1 22.000] [1
CHNL#'S 1,4: [ANGL100060 [MIS GT1 18.000] [1]]-[ANGL156661 [DARL G1 22.000] [1
100.00
-100.0
TIME (SECONDS)
SAT, JAN 31 2009 15:42
"NE,NY,NB ANGLE"

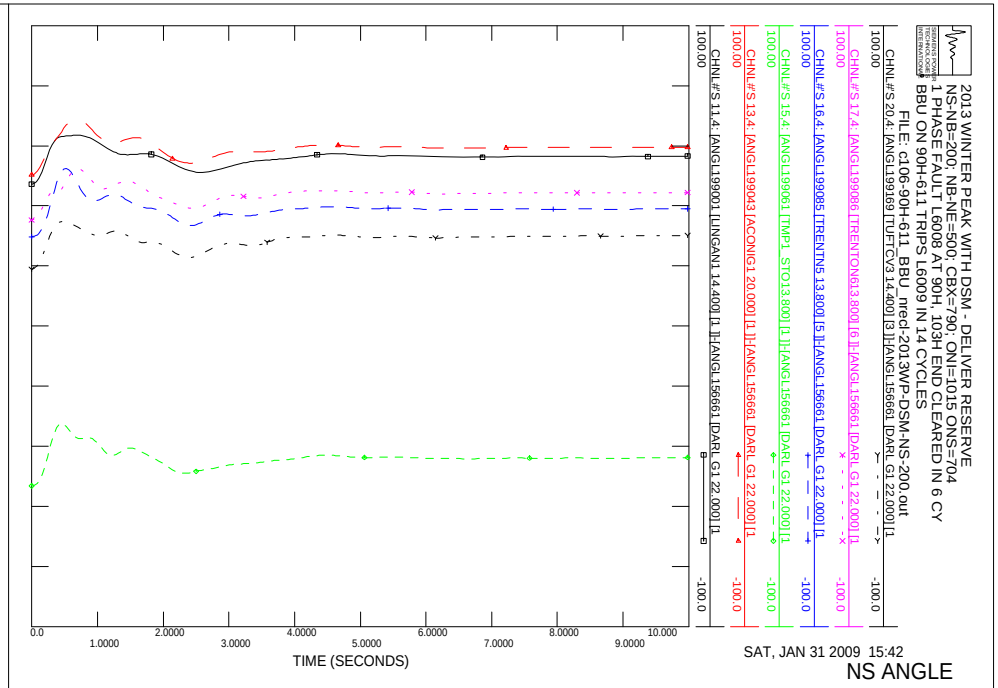
2013 WINTER PEAK WITH DSM - DELIVER RESERVE
NS-NB=200; NB-NE=500; CBX=790; ONI=1015 ONS=704
1 PHASE FAULT L6008 AT 90H, 103H END CLEARED IN 6 CY
BBU ON 90H-611 TRIPS L6009 IN 14 CYCLES
FILE: c106-90H-611_BBU_nrecl-2013WP-DSM-NS-200.out
CHNL#'S 20,4: [ANGL199169 [TUFTCV3 14.400] [3]]-[ANGL156661 [DARL G1 22.000] [1
CHNL#'S 17,4: [ANGL199086 [TRENTON613.800] [6]]-[ANGL156661 [DARL G1 22.000] [1
CHNL#'S 16,4: [ANGL199085 [TRENTN5 13.800] [5]]-[ANGL156661 [DARL G1 22.000] [1
CHNL#'S 15,4: [ANGL199061 [TMP1 STO13.800] [1]]-[ANGL156661 [DARL G1 22.000] [1
CHNL#'S 13,4: [ANGL199043 [ACONIG1 20.000] [1]]-[ANGL156661 [DARL G1 22.000] [1
CHNL#'S 11,4: [ANGL199001 [LINGAN1 14.400] [1]]-[ANGL156661 [DARL G1 22.000] [1
100.00
-100.0
TIME (SECONDS)
SAT, JAN 31 2009 15:42
NS ANGLE

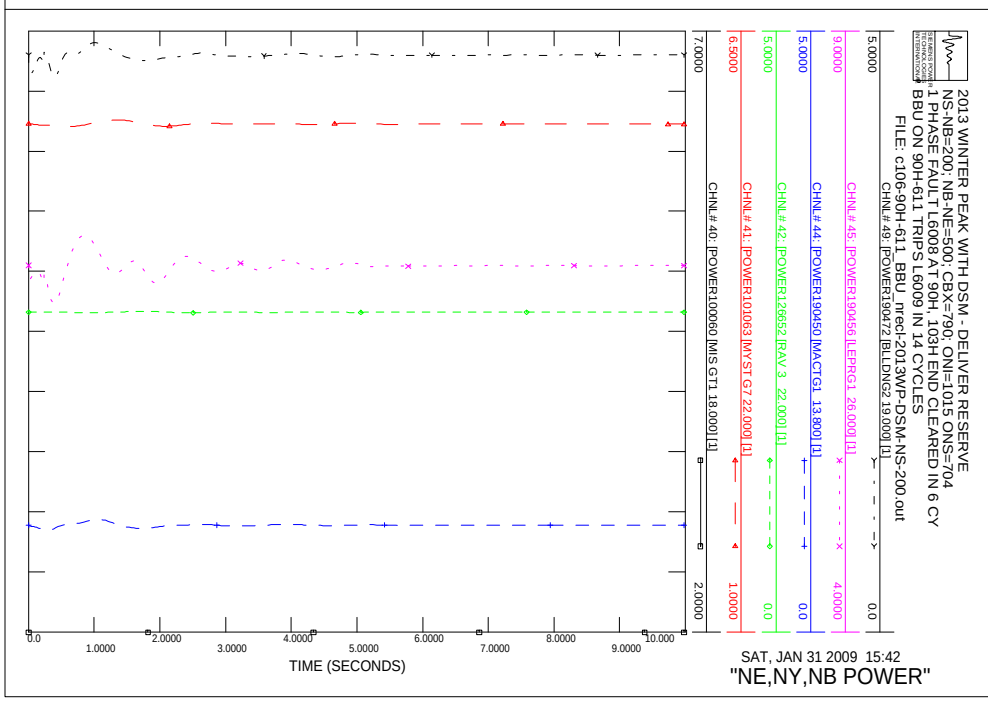
2013 WINTER PEAK WITH DSM - DELIVER RESERVE
NS-NB=200; NB-NE=500; CBX=790; ONI=1015 ONS=704
1 PHASE FAULT L6008 AT 90H, 103H END CLEARED IN 6 CY
BBU ON 90H-611 TRIPS L6009 IN 14 CYCLES
FILE: c106-90H-611_BBU_nrecl-2013WP-DSM-NS-200.out
CHNL# 49: [POWER190472 [BLLDNG2 19.000] [1]
CHNL# 45: [POWER190456 [LEPRG1 26.000] [1]
CHNL# 44: [POWER190450 [MACTG1 13.800] [1]
CHNL# 42: [POWER126652 [RAV 3 22.000] [1]
CHNL# 41: [POWER101063 [MYST G7 22.000] [1]
CHNL# 40: [POWER100060 [MIS GT1 18.000] [1]
5.0000
0.0
9.0000
4.0000
5.0000
0.0
5.0000
0.0
6.5000
1.0000
7.0000
2.0000
TIME (SECONDS)
SAT, JAN 31 2009 15:42
"NE,NY,NB POWER"

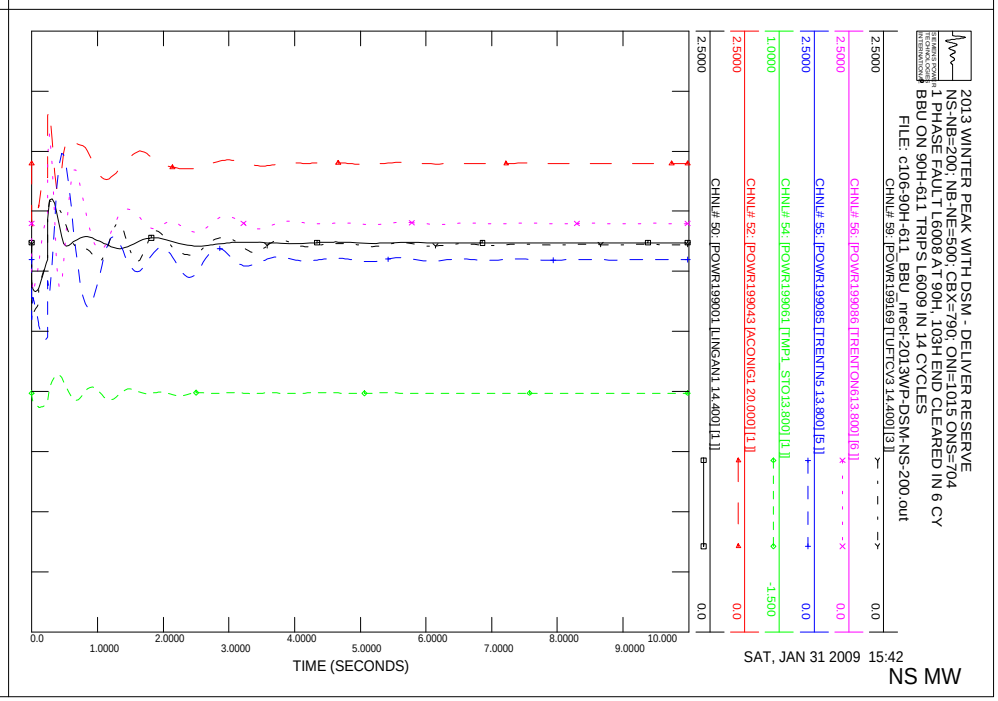
2013 WINTER PEAK WITH DSM - DELIVER RESERVE
NS-NB=200; NB-NE=500; CBX=790; ONI=1015 ONS=704
1 PHASE FAULT L6008 AT 90H, 103H END CLEARED IN 6 CY
BBU ON 90H-611 TRIPS L6009 IN 14 CYCLES
FILE: c106-90H-611_BBU_nrecl-2013WP-DSM-NS-200.out
CHNL# 59: [POWR199169 [TUFTCV3 14.400] [3]]
CHNL# 56: [POWR199086 [TRENTON613.800] [6]]
CHNL# 55: [POWR199085 [TRENTN5 13.800] [5]]
CHNL# 54: [POWR199061 [TMP1 STO13.800] [1]]
CHNL# 52: [POWR199043 [ACONIG1 20.000] [1]]
CHNL# 50: [POWR199001 [LINGAN1 14.400] [1]]
2.5000
0.0
2.5000
0.0
2.5000
0.0
1.0000
-1.500
2.5000
0.0
2.5000
0.0
TIME (SECONDS)
SAT, JAN 31 2009 15:42
NS MW

2013 WINTER PEAK WITH DSM - DELIVER RESERVE
NS-NB=200; NB-NE=500; CBX=790; ONI=1015 ONS=704
1 PHASE FAULT L6008 AT 90H, 103H END CLEARED IN 6 CY
BBU ON 90H-611 TRIPS L6009 IN 14 CYCLES
FILE: c106-90H-611_BBU_mecl-2013WP-DSM-NS-200.out
CHNL# 119: [VARS IR141-DIGBY]
CHNL# 118: [VARS IR137-STATIA]
CHNL# 117: [VARS IR114-GLENDHU]
CHNL# 116: [VARS IR84-DALHOUSIE]
CHNL# 115: [VARS IR82_NUTTBY]
CHNL# 114: [VARS IR45_AMHERST]
TIME (SECONDS)
SAT, JAN 31 2009 15:42
NS WIND MV

2013 WINTER PEAK WITH DSM - DELIVER RESERVE
NS-NB=200; NB-NE=500; CBX=790; ONI=1015 ONS=704
1 PHASE FAULT L6008 AT 90H, 103H END CLEARED IN 6 CY
BBU ON 90H-611 TRIPS L6009 IN 14 CYCLES
FILE: c106-90H-611_BBU_mecl-2013WP-DSM-NS-200.out
CHNL# 79: [POWER IR141-DIGBY]
CHNL# 78: [POWER IR137-STATIA]
CHNL# 77: [POWER IR114-GLENDHU]
CHNL# 76: [POWER IR84-DALHOUSIE]
CHNL# 75: [POWER IR82_NUTTBY]
CHNL# 74: [POWER IR45_AMHERST]
TIME (SECONDS)
SAT, JAN 31 2009 15:42
NS WIND MW

2013 WINTER PEAK WITH DSM - DELIVER RESERVE
NS-NB=200; NB-NE=500; CBX=790; ONI=1015 ONS=704
1 PHASE FAULT L6008 AT 90H, 103H END CLEARED IN 6 CY
BBU ON 90H-611 TRIPS L6009 IN 14 CYCLES
FILE: c106-90H-611_BBU_mecl-2013WP-DSM-NS-200.out
CHNL# 133: [VOLT199125 [ONSLOW 345.00]]
CHNL# 132: [VOLT199120 [HOPEWELL 345.00]]
CHNL# 131: [VOLT199045 [WOODBINE345.00]]
CHNL# 130: [VOLT190320 [SALBRY 345.00]]
CHNL# 128: [VOLT190004 [KESWICK 345.00]]
CHNL# 127: [VOLT 70002 [ORRINGTN345.00]]
TIME (SECONDS)
SAT, JAN 31 2009 15:42
"345KV VOLTAGE"

2013 WINTER PEAK WITH DSM - DELIVER RESERVE
NS-NB=200; NB-NE=500; CBX=790; ONI=1015 ONS=704
1 PHASE FAULT L6008 AT 90H, 103H END CLEARED IN 6 CY
BBU ON 90H-611 TRIPS L6009 IN 14 CYCLES
FILE: c106-90H-611_BBU_mecl-2013WP-DSM-NS-200.out
CHNL# 125: 60*(1+[FREQ199125 [ONSLOW 345.00]])
CHNL# 124: 60*(1+[FREQ199120 [HOPEWELL 345.00]])
CHNL# 123: 60*(1+[FREQ199045 [WOODBINE345.00]])
CHNL# 122: 60*(1+[FREQ190320 [SALBRY 345.00]])
CHNL# 121: 60*(1+[FREQ190197 [C.COVE 345.00]])
CHNL# 120: 60*(1+[FREQ 70002 [ORRINGTN345.00]])
TIME (SECONDS)
SAT, JAN 31 2009 15:42
FREQUENCY HZ

2013 WINTER PEAK WITH DSM - DELIVER RESERVE
NS-NB=200; NB-NE=500; CBX=790; ONI=1015 ONS=704
1 PHASE FAULT L6008 AT 90H, 103H END CLEARED IN 6 CY
BBU ON 90H-611 TRIPS L6009 IN 14 CYCLES
FILE: c106-90H-611_BBU_nrecl-2013WP-DSM-NS-200.out
CHNL# 146: [VOLT199280 [TUSKET A138.00]]
CHNL# 145: [VOLT199193 [HHWAS 138.00]]
CHNL# 144: [VOLT199165 [TUFTCOVE138.00]]
CHNL# 143: [VOLT199135 [SPRNGHILL138.00]]
CHNL# 142: [VOLT199090 [SON-TREN138.00]]
CHNL# 141: [VOLT199051 [HASTINGS138.00]]
1.2000
0.70000
0.0
1.0000
2.0000
3.0000
4.0000
5.0000
6.0000
7.0000
8.0000
9.0000
10.000
TIME (SECONDS)
SAT, JAN 31 2009 15:42
138KV BUS VOLTS

2013 WINTER PEAK WITH DSM - DELIVER RESERVE
NS-NB=200; NB-NE=500; CBX=790; ONI=1015 ONS=704
1 PHASE FAULT L6008 AT 90H, 103H END CLEARED IN 6 CY
BBU ON 90H-611 TRIPS L6009 IN 14 CYCLES
FILE: c106-90H-611_BBU_nrecl-2013WP-DSM-NS-200.out
CHNL# 140: [VOLT199240 [BWATER A230.00]]
CHNL# 139: [VOLT199200 [BRUSHY 230.00]]
CHNL# 138: [VOLT199130 [ONSLOW 230.00]]
CHNL# 137: [VOLT199050 [HASTINGS230.00]]
CHNL# 136: [VOLT199044 [PT.ACONI230.00]]
CHNL# 135: [VOLT199000 [LINGAN 230.00]]
1.2000
0.70000
0.0
1.0000
2.0000
3.0000
4.0000
5.0000
6.0000
7.0000
8.0000
9.0000
10.000
TIME (SECONDS)
SAT, JAN 31 2009 15:42
230KV BUS VOLTS

2013 WINTER PEAK WITH DSM - DELIVER RESERVE
NS-NB=200; NB-NE=500; CBX=790; ONI=1015 ONS=704
1 PHASE FAULT L6008 AT 90H, 103H END CLEARED IN 6 CY
BBU ON 90H-611 TRIPS L6009 IN 14 CYCLES
FILE: c106-90H-611_BBU_nrecl-2013WP-DSM-NS-200.out
CHNL# 217: [L6533MW]
CHNL# 215: [L6503MW]
CHNL# 197: [L8003MW]
CHNL# 195: [L8004MW]
CHNL# 193: [L8001MW]
CHNL# 221: [L3001MW]
250.00
-250.0
500.00
0.0
1000.0
-1000.
0.0
1.0000
2.0000
3.0000
4.0000
5.0000
6.0000
7.0000
8.0000
9.0000
10.000
TIME (SECONDS)
SAT, JAN 31 2009 15:42
LINE FLOW MW

2013 WINTER PEAK WITH DSM - DELIVER RESERVE
NS-NB=200; NB-NE=500; CBX=790; ONI=1015 ONS=704
1 PHASE FAULT L6008 AT 90H, 103H END CLEARED IN 6 CY
BBU ON 90H-611 TRIPS L6009 IN 14 CYCLES
FILE: c106-90H-611_BBU_nrecl-2013WP-DSM-NS-200.out
CHNL# 154: [IR141-DIGBYH69.0 VOLTS]
CHNL# 153: [IR137-STATIG25.0 VOLTS]
CHNL# 152: [IR114-GLENDH138.0 VOLTS]
CHNL# 151: [IR84-DALHOHV230.0 VOLTS]
CHNL# 150: [IR82 NUTBHV69.0 VOLTS]
CHNL# 149: [IR45 AMHERTP138.0 VOLTS]
1.2000
0.70000
0.0
1.0000
2.0000
3.0000
4.0000
5.0000
6.0000
7.0000
8.0000
9.0000
10.000
TIME (SECONDS)
SAT, JAN 31 2009 15:42
WIND BUS VOLTS

2013 WINTER PEAK WITH DSM - DELIVER RESERVE
NS-NB=200; NB-NE=500; CBX=790; ONI=1015 ONS=704
1 PHASE FAULT L6518 AT 47C, 2C END CLEARED IN 6 CY
BBU ON 47C-601 TRIPS TMP-1 IN 14 CYCLES
FILE: c107-47C-601_BBU_nrecl-2013WP-DSM-NS-200.out
CHNL# 20: [ANGL199169 [TUFTCV3 14.400] [3]] [ANGL156661 [DARL G1 22.000] [1
CHNL# 17: [ANGL199086 [TRENTON6613.800] [6]] [ANGL156661 [DARL G1 22.000] [1
CHNL# 16: [ANGL199085 [TRENTN5 13.800] [5]] [ANGL156661 [DARL G1 22.000] [1
CHNL# 15: [ANGL199061 [TMP1 STO13.800] [1]] [ANGL156661 [DARL G1 22.000] [1
CHNL# 13: [ANGL199043 [ACONIG1 20.000] [1]] [ANGL156661 [DARL G1 22.000] [1
CHNL# 11: [ANGL199001 [LINGAN1 14.400] [1]] [ANGL156661 [DARL G1 22.000] [1
100.00
-100.0
0.0
1.0000
2.0000
3.0000
4.0000
5.0000
6.0000
7.0000
8.0000
9.0000
10.000
TIME (SECONDS)
SAT, JAN 31 2009 15:42
NS ANGLE

2013 WINTER PEAK WITH DSM - DELIVER RESERVE
NS-NB=200; NB-NE=500; CBX=790; ONI=1015 ONS=704
1 PHASE FAULT L6518 AT 47C, 2C END CLEARED IN 6 CY
BBU ON 47C-601 TRIPS TMP-1 IN 14 CYCLES
FILE: c107-47C-601_BBU_nrecl-2013WP-DSM-NS-200.out
CHNL# 10: [ANGL190472 [BLLDNG2 19.000] [1]] [ANGL156661 [DARL G1 22.000] [1
CHNL# 6: [ANGL190456 [LEPRG1 26.000] [1]] [ANGL156661 [DARL G1 22.000] [1
CHNL# 5: [ANGL190450 [MACTG1 13.800] [1]] [ANGL156661 [DARL G1 22.000] [1
CHNL# 3: [ANGL126652 [RAV 3 22.000] [1]] [ANGL156661 [DARL G1 22.000] [1
CHNL# 2: [ANGL101063 [MYST G7 22.000] [1]] [ANGL156661 [DARL G1 22.000] [1
CHNL# 1: [ANGL100060 [MIS GT1 18.000] [1]] [ANGL156661 [DARL G1 22.000] [1
100.00
-100.0
0.0
1.0000
2.0000
3.0000
4.0000
5.0000
6.0000
7.0000
8.0000
9.0000
10.000
TIME (SECONDS)
SAT, JAN 31 2009 15:42
"NE,NY,NB ANGLE"

2013 WINTER PEAK WITH DSM - DELIVER RESERVE
NS-NB=200; NB-NE=500; CBX=790; ONI=1015 ONS=704
1 PHASE FAULT L6518 AT 47C, 2C END CLEARED IN 6 CY
BBU ON 47C-601 TRIPS TMP-1 IN 14 CYCLES
FILE: c107-47C-601_BBU_nrecl-2013WP-DSM-NS-200.out
CHNL# 59: [POWR199169 [TUFTCV3 14.400] [3]]
CHNL# 56: [POWR199086 [TRENTON6613.800] [6]]
CHNL# 55: [POWR199085 [TRENTN5 13.800] [5]]
CHNL# 54: [POWR199061 [TMP1 STO13.800] [1]]
CHNL# 52: [POWR199043 [ACONIG1 20.000] [1]]
CHNL# 50: [POWR199001 [LINGAN1 14.400] [1]]
2.5000
0.0
-1.500
1.0000
2.0000
3.0000
4.0000
5.0000
6.0000
7.0000
8.0000
9.0000
10.000
TIME (SECONDS)
SAT, JAN 31 2009 15:42
NS MW

2013 WINTER PEAK WITH DSM - DELIVER RESERVE
NS-NB=200; NB-NE=500; CBX=790; ONI=1015 ONS=704
1 PHASE FAULT L6518 AT 47C, 2C END CLEARED IN 6 CY
BBU ON 47C-601 TRIPS TMP-1 IN 14 CYCLES
FILE: c107-47C-601_BBU_nrecl-2013WP-DSM-NS-200.out
CHNL# 49: [POWER190472 [BLLDNG2 19.000] [1]]
CHNL# 45: [POWER190456 [LEPRG1 26.000] [1]]
CHNL# 44: [POWER190450 [MACTG1 13.800] [1]]
CHNL# 42: [POWER126652 [RAV 3 22.000] [1]]
CHNL# 41: [POWER101063 [MYST G7 22.000] [1]]
CHNL# 40: [POWER100060 [MIS GT1 18.000] [1]]
5.0000
0.0
4.0000
1.0000
2.0000
3.0000
4.0000
5.0000
6.0000
7.0000
8.0000
9.0000
10.000
TIME (SECONDS)
SAT, JAN 31 2009 15:42
"NE,NY,NB POWER"

2013 WINTER PEAK WITH DSM - DELIVER RESERVE
NS-NB=200; NB-NE=500; CBX=790; ONI=1015 ONS=704
1 PHASE FAULT L6518 AT 47C, 2C END CLEARED IN 6 CY
BBU ON 47C-601 TRIPS TMP-1 IN 14 CYCLES
FILE: c107-47C-601_BBU_nrecl-2013WP-DSM-NS-200.out
CHNL# 119: [VARS IR141-DIGBY]
CHNL# 118: [VARS IR137-STATIA]
CHNL# 117: [VARS IR114-GLENDHU]
CHNL# 116: [VARS IR84-DALHOUSIE]
CHNL# 115: [VARS IR82_NUTTBY]
CHNL# 114: [VARS IR45_AMHERST]
TIME (SECONDS)
SAT, JAN 31 2009 15:42
NS WIND MV

2013 WINTER PEAK WITH DSM - DELIVER RESERVE
NS-NB=200; NB-NE=500; CBX=790; ONI=1015 ONS=704
1 PHASE FAULT L6518 AT 47C, 2C END CLEARED IN 6 CY
BBU ON 47C-601 TRIPS TMP-1 IN 14 CYCLES
FILE: c107-47C-601_BBU_nrecl-2013WP-DSM-NS-200.out
CHNL# 79: [POWER IR141-DIGBY]
CHNL# 78: [POWER IR137-STATIA]
CHNL# 77: [POWER IR114-GLENDHU]
CHNL# 76: [POWER IR84-DALHOUSIE]
CHNL# 75: [POWER IR82_NUTTBY]
CHNL# 74: [POWER IR45_AMHERST]
TIME (SECONDS)
SAT, JAN 31 2009 15:42
NS WIND MW

2013 WINTER PEAK WITH DSM - DELIVER RESERVE
NS-NB=200; NB-NE=500; CBX=790; ONI=1015 ONS=704
1 PHASE FAULT L6518 AT 47C, 2C END CLEARED IN 6 CY
BBU ON 47C-601 TRIPS TMP-1 IN 14 CYCLES
FILE: c107-47C-601_BBU_nrecl-2013WP-DSM-NS-200.out
CHNL# 133: [VOLT199125 [ONSLOW 345.00]]
CHNL# 132: [VOLT199120 [HOPEWELL 345.00]]
CHNL# 131: [VOLT199045 [WOODBINE345.00]]
CHNL# 130: [VOLT190320 [SALBRY 345.00]]
CHNL# 128: [VOLT190004 [KESWICK 345.00]]
CHNL# 127: [VOLT 70002 [ORRINGTN345.00]]
TIME (SECONDS)
SAT, JAN 31 2009 15:42
"345KV VOLTAGE"

2013 WINTER PEAK WITH DSM - DELIVER RESERVE
NS-NB=200; NB-NE=500; CBX=790; ONI=1015 ONS=704
1 PHASE FAULT L6518 AT 47C, 2C END CLEARED IN 6 CY
BBU ON 47C-601 TRIPS TMP-1 IN 14 CYCLES
FILE: c107-47C-601_BBU_nrecl-2013WP-DSM-NS-200.out
CHNL# 125: 60*(1+[FREQ199125 [ONSLOW 345.00]])
CHNL# 124: 60*(1+[FREQ199120 [HOPEWELL 345.00]])
CHNL# 123: 60*(1+[FREQ199045 [WOODBINE345.00]])
CHNL# 122: 60*(1+[FREQ190320 [SALBRY 345.00]])
CHNL# 121: 60*(1+[FREQ190197 [C.COVE 345.00]])
CHNL# 120: 60*(1+[FREQ 70002 [ORRINGTN345.00]])
TIME (SECONDS)
SAT, JAN 31 2009 15:42
FREQUENCY HZ

2013 WINTER PEAK WITH DSM - DELIVER RESERVE
NS-NB=200; NB-NE=500; CBX=790; ONI=1015 ONS=704
1 PHASE FAULT L6518 AT 47C, 2C END CLEARED IN 6 CY
BBU ON 47C-601 TRIPS TMP-1 IN 14 CYCLES
FILE: c107-47C-601_BBU_nrecl-2013WP-DSM-NS-200.out
CHNL# 146: [VOLT199280 [TUSKET A138.00]]
CHNL# 145: [VOLT199193 [HHWAS 138.00]]
CHNL# 144: [VOLT199165 [TUFTCOVE138.00]]
CHNL# 143: [VOLT199138 [SPRNGHILL138.00]]
CHNL# 142: [VOLT199090 [SON-TREN138.00]]
CHNL# 141: [VOLT199051 [HASTINGS138.00]]
1.2000
0.70000
0.0
1.0000
2.0000
3.0000
4.0000
5.0000
6.0000
7.0000
8.0000
9.0000
10.000
TIME (SECONDS)
SAT, JAN 31 2009 15:42
138KV BUS VOLTS

2013 WINTER PEAK WITH DSM - DELIVER RESERVE
NS-NB=200; NB-NE=500; CBX=790; ONI=1015 ONS=704
1 PHASE FAULT L6518 AT 47C, 2C END CLEARED IN 6 CY
BBU ON 47C-601 TRIPS TMP-1 IN 14 CYCLES
FILE: c107-47C-601_BBU_nrecl-2013WP-DSM-NS-200.out
CHNL# 140: [VOLT199240 [BWATER A230.00]]
CHNL# 139: [VOLT199200 [BRUSHY 230.00]]
CHNL# 138: [VOLT199130 [ONSLOW 230.00]]
CHNL# 137: [VOLT199050 [HASTINGS230.00]]
CHNL# 136: [VOLT199044 [PT.ACONI230.00]]
CHNL# 135: [VOLT199000 [LINGAN 230.00]]
1.2000
0.70000
0.0
1.0000
2.0000
3.0000
4.0000
5.0000
6.0000
7.0000
8.0000
9.0000
10.000
TIME (SECONDS)
SAT, JAN 31 2009 15:42
230KV BUS VOLTS

2013 WINTER PEAK WITH DSM - DELIVER RESERVE
NS-NB=200; NB-NE=500; CBX=790; ONI=1015 ONS=704
1 PHASE FAULT L6518 AT 47C, 2C END CLEARED IN 6 CY
BBU ON 47C-601 TRIPS TMP-1 IN 14 CYCLES
FILE: c107-47C-601_BBU_nrecl-2013WP-DSM-NS-200.out
CHNL# 217: [L6533MW]
CHNL# 215: [L6503MW]
CHNL# 197: [L8003MW]
CHNL# 195: [L8004MW]
CHNL# 193: [L8001MW]
CHNL# 221: [L3001MW]
250.00
500.00
1000.0
0.0
-250.0
-1000.
0.0
1.0000
2.0000
3.0000
4.0000
5.0000
6.0000
7.0000
8.0000
9.0000
10.000
TIME (SECONDS)
SAT, JAN 31 2009 15:42
LINE FLOW MW

2013 WINTER PEAK WITH DSM - DELIVER RESERVE
NS-NB=200; NB-NE=500; CBX=790; ONI=1015 ONS=704
1 PHASE FAULT L6518 AT 47C, 2C END CLEARED IN 6 CY
BBU ON 47C-601 TRIPS TMP-1 IN 14 CYCLES
FILE: c107-47C-601_BBU_nrecl-2013WP-DSM-NS-200.out
CHNL# 154: [IR141-DIGBYH69.0 VOLTS]
CHNL# 153: [IR137-STATIG25.0 VOLTS]
CHNL# 152: [IR114-GLENDH138.0 VOLTS]
CHNL# 151: [IR84-DALHOHV230.0 VOLTS]
CHNL# 150: [IR82-NUTBHV69.0 VOLTS]
CHNL# 149: [IR45-AMHERTP138.0 VOLTS]
1.2000
0.70000
0.0
1.0000
2.0000
3.0000
4.0000
5.0000
6.0000
7.0000
8.0000
9.0000
10.000
TIME (SECONDS)
SAT, JAN 31 2009 15:42
WIND BUS VOLTS

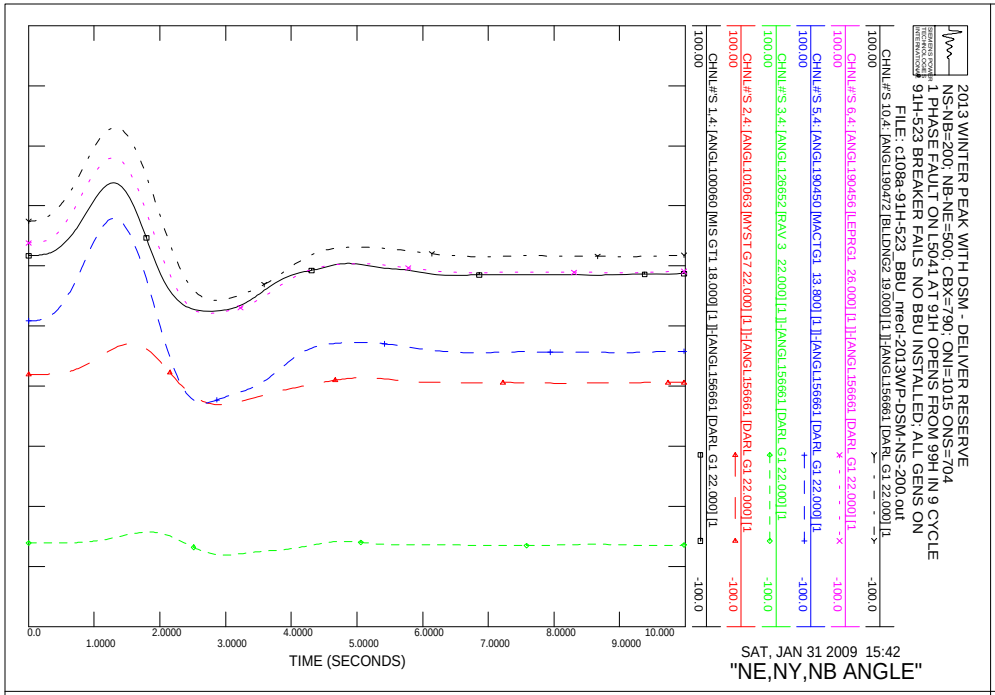
2013 WINTER PEAK WITH DSM - DELIVER RESERVE
NS-NB=200; NB-NE=500; CBX=790; ONI=1015 ONS=704
1 PHASE FAULT ON L5041 AT 91H OPENS FROM 99H IN 9 CYCLE
91H-523 BREAKER FAILS NO BBU INSTALLED; ALL GENS ON
FILE: c108a-91H-523_BBU_nrecl-2013WP-DSM-NS-200.out
CHNL#'S 10,4: [ANGL190472 [BLLDNG2 19.000] [1]]-[ANGL156661 [DARL G1 22.000] [1
CHNL#'S 6,4: [ANGL190456 [LEPRG1 26.000] [1]]-[ANGL156661 [DARL G1 22.000] [1
CHNL#'S 5,4: [ANGL190450 [MACTG1 13.800] [1]]-[ANGL156661 [DARL G1 22.000] [1
CHNL#'S 3,4: [ANGL126652 [RAV 3 22.000] [1]]-[ANGL156661 [DARL G1 22.000] [1
CHNL#'S 2,4: [ANGL101063 [MYST G7 22.000] [1]]-[ANGL156661 [DARL G1 22.000] [1
CHNL#'S 1,4: [ANGL100060 [MIS GT1 18.000] [1]]-[ANGL156661 [DARL G1 22.000] [1
TIME (SECONDS)
SAT, JAN 31 2009 15:42
"NE,NY,NB ANGLE"

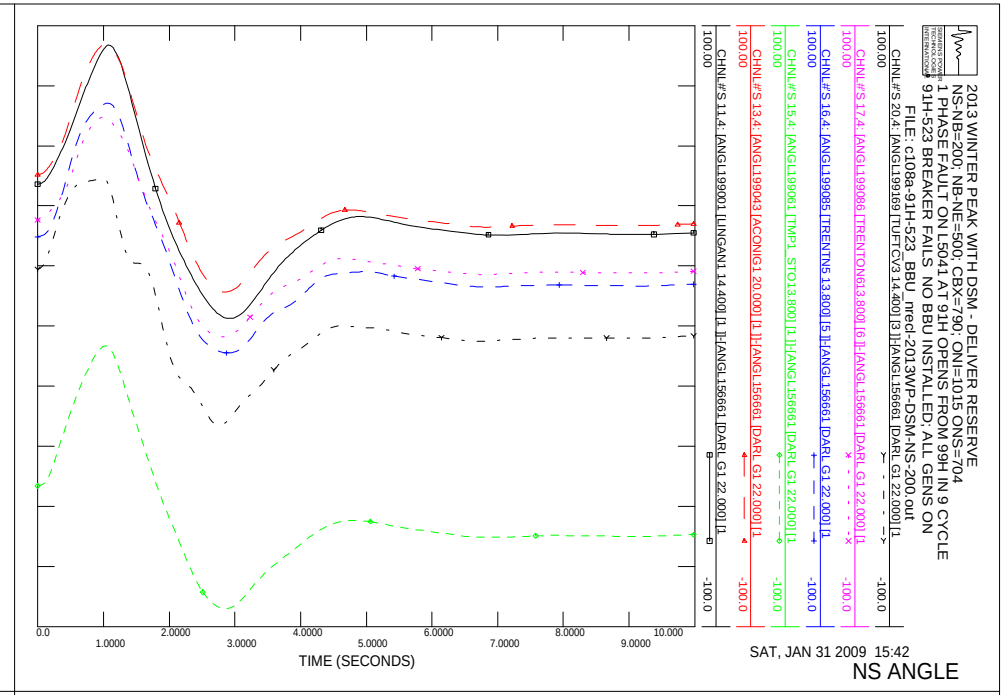
2013 WINTER PEAK WITH DSM - DELIVER RESERVE
NS-NB=200; NB-NE=500; CBX=790; ONI=1015 ONS=704
1 PHASE FAULT ON L5041 AT 91H OPENS FROM 99H IN 9 CYCLE
91H-523 BREAKER FAILS NO BBU INSTALLED; ALL GENS ON
FILE: c108a-91H-523_BBU_nrecl-2013WP-DSM-NS-200.out
CHNL#'S 20,4: [ANGL199169 [TUFTCV3 14.400] [3]]-[ANGL156661 [DARL G1 22.000] [1
CHNL#'S 17,4: [ANGL199086 [TRENTON613.800] [6]]-[ANGL156661 [DARL G1 22.000] [1
CHNL#'S 16,4: [ANGL199085 [TRENTN5 13.800] [5]]-[ANGL156661 [DARL G1 22.000] [1
CHNL#'S 15,4: [ANGL199061 [TMP1 STO13.800] [1]]-[ANGL156661 [DARL G1 22.000] [1
CHNL#'S 13,4: [ANGL199043 [ACONIG1 20.000] [1]]-[ANGL156661 [DARL G1 22.000] [1
CHNL#'S 11,4: [ANGL199001 [LINGAN1 14.400] [1]]-[ANGL156661 [DARL G1 22.000] [1
TIME (SECONDS)
SAT, JAN 31 2009 15:42
NS ANGLE

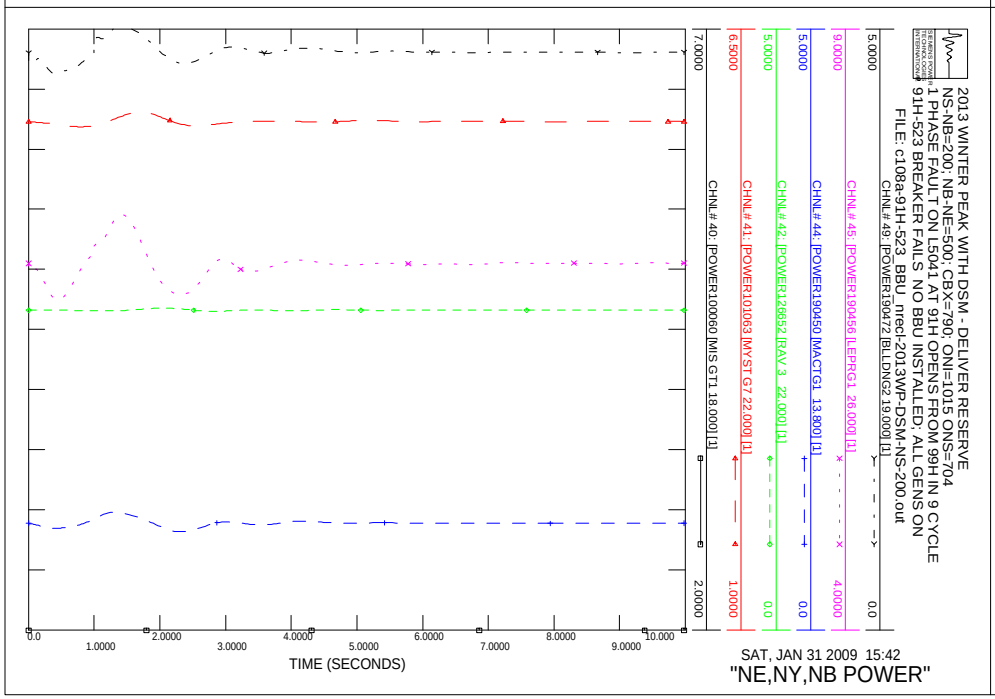
2013 WINTER PEAK WITH DSM - DELIVER RESERVE
NS-NB=200; NB-NE=500; CBX=790; ONI=1015 ONS=704
1 PHASE FAULT ON L5041 AT 91H OPENS FROM 99H IN 9 CYCLE
91H-523 BREAKER FAILS NO BBU INSTALLED; ALL GENS ON
FILE: c108a-91H-523_BBU_nrecl-2013WP-DSM-NS-200.out
CHNL# 49: [POWER190472 [BLLDNG2 19.000] [1]
CHNL# 45: [POWER190456 [LEPRG1 26.000] [1]
CHNL# 44: [POWER190450 [MACTG1 13.800] [1]
CHNL# 42: [POWER126652 [RAV 3 22.000] [1]
CHNL# 41: [POWER101063 [MYST G7 22.000] [1]
CHNL# 40: [POWER100060 [MIS GT1 18.000] [1]
TIME (SECONDS)
SAT, JAN 31 2009 15:42
"NE,NY,NB POWER"

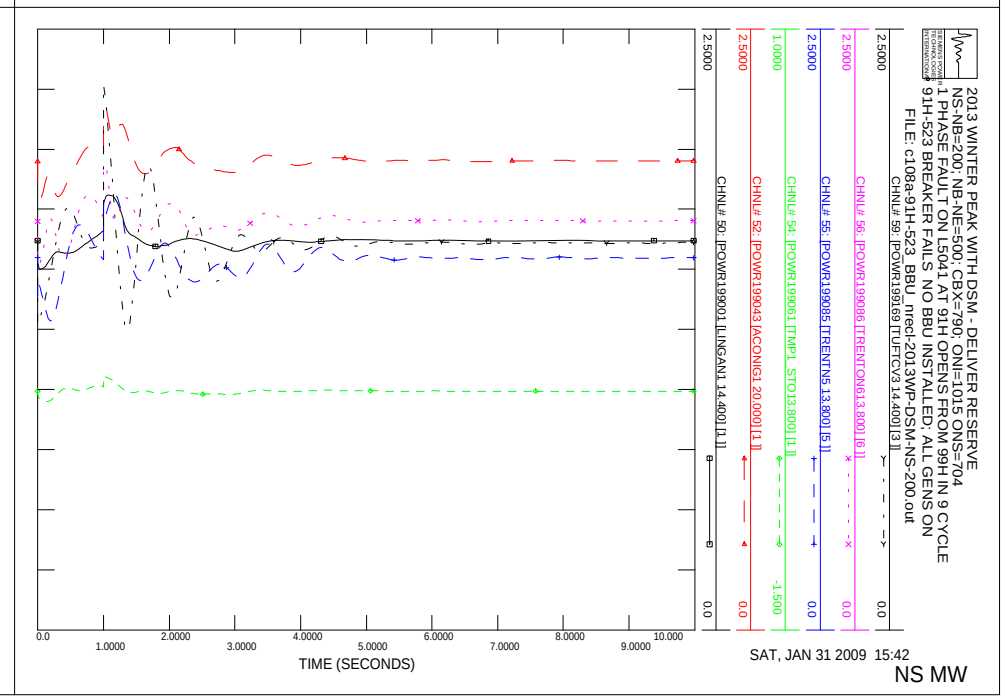
2013 WINTER PEAK WITH DSM - DELIVER RESERVE
NS-NB=200; NB-NE=500; CBX=790; ONI=1015 ONS=704
1 PHASE FAULT ON L5041 AT 91H OPENS FROM 99H IN 9 CYCLE
91H-523 BREAKER FAILS NO BBU INSTALLED; ALL GENS ON
FILE: c108a-91H-523_BBU_nrecl-2013WP-DSM-NS-200.out
CHNL# 59: [POWR199169 [TUFTCV3 14.400] [3]]
CHNL# 56: [POWR199086 [TRENTON613.800] [6]]
CHNL# 55: [POWR199085 [TRENTN5 13.800] [5]]
CHNL# 54: [POWR199061 [TMP1 STO13.800] [1]]
CHNL# 52: [POWR199043 [ACONIG1 20.000] [1]]
CHNL# 50: [POWR199001 [LINGAN1 14.400] [1]]
TIME (SECONDS)
SAT, JAN 31 2009 15:42
NS MW

2013 WINTER PEAK WITH DSM - DELIVER RESERVE
NS-NB=200; NB-NE=500; CBX=790; ONI=1015 ONS=704
1 PHASE FAULT ON L5041 AT 91H OPENS FROM 99H IN 9 CYCLE
91H-523 BREAKER FAILS NO BBU INSTALLED; ALL GENS ON
FILE: c108a-91H-523_BBU_mrec-2013WP-DSM-NS-200.out
CHNL# 119: [VARS IR141-DIGBY] 0.50000 -0.5000
CHNL# 118: [VARS IR137-STATIA] 0.50000 -0.5000
CHNL# 117: [VARS IR114-GLENDHU] 0.50000 -0.5000
CHNL# 116: [VARS IR84-DALHOUSIE] 0.50000 -0.5000
CHNL# 115: [VARS IR82_NUTTBY] 0.50000 -0.5000
CHNL# 114: [VARS IR45_AMHERST] 0.50000 -0.5000
0.0 1.0000 2.0000 3.0000 4.0000 5.0000 6.0000 7.0000 8.0000 9.0000 10.000
TIME (SECONDS)
SAT, JAN 31 2009 15:42
NS WIND MV

2013 WINTER PEAK WITH DSM - DELIVER RESERVE
NS-NB=200; NB-NE=500; CBX=790; ONI=1015 ONS=704
1 PHASE FAULT ON L5041 AT 91H OPENS FROM 99H IN 9 CYCLE
91H-523 BREAKER FAILS NO BBU INSTALLED; ALL GENS ON
FILE: c108a-91H-523_BBU_mrec-2013WP-DSM-NS-200.out
CHNL# 79: [POWER IR141-DIGBY] 1.0000 0.0
CHNL# 78: [POWER IR137-STATIA] 1.0000 0.0
CHNL# 77: [POWER IR114-GLENDHU] 1.0000 0.0
CHNL# 76: [POWER IR84-DALHOUSIE] 1.0000 0.0
CHNL# 75: [POWER IR82_NUTTBY] 1.0000 0.0
CHNL# 74: [POWER IR45_AMHERST] 1.0000 0.0
0.0 1.0000 2.0000 3.0000 4.0000 5.0000 6.0000 7.0000 8.0000 9.0000 10.000
TIME (SECONDS)
SAT, JAN 31 2009 15:42
NS WIND MW

2013 WINTER PEAK WITH DSM - DELIVER RESERVE
NS-NB=200; NB-NE=500; CBX=790; ONI=1015 ONS=704
1 PHASE FAULT ON L5041 AT 91H OPENS FROM 99H IN 9 CYCLE
91H-523 BREAKER FAILS NO BBU INSTALLED; ALL GENS ON
FILE: c108a-91H-523_BBU_mrec-2013WP-DSM-NS-200.out
CHNL# 133: [VOLT199125 [ONSLOW 345.00]] 1.1000 0.90000
CHNL# 132: [VOLT199120 [HOPEWELL 345.00]] 1.1000 0.90000
CHNL# 131: [VOLT199045 [WOODBINE345.00]] 1.1000 0.90000
CHNL# 130: [VOLT190320 [SALBRY 345.00]] 1.1000 0.90000
CHNL# 128: [VOLT190004 [KESWICK 345.00]] 1.1000 0.90000
CHNL# 127: [VOLT 70002 [ORRINGTN345.00]] 1.1000 0.90000
0.0 1.0000 2.0000 3.0000 4.0000 5.0000 6.0000 7.0000 8.0000 9.0000 10.000
TIME (SECONDS)
SAT, JAN 31 2009 15:42
"345KV VOLTAGE"

2013 WINTER PEAK WITH DSM - DELIVER RESERVE
NS-NB=200; NB-NE=500; CBX=790; ONI=1015 ONS=704
1 PHASE FAULT ON L5041 AT 91H OPENS FROM 99H IN 9 CYCLE
91H-523 BREAKER FAILS NO BBU INSTALLED; ALL GENS ON
FILE: c108a-91H-523_BBU_mrec-2013WP-DSM-NS-200.out
CHNL# 125: 60*(1+[FREQ199125 [ONSLOW 345.00]]) 60.500 59.500
CHNL# 124: 60*(1+[FREQ199120 [HOPEWELL 345.00]]) 60.500 59.500
CHNL# 123: 60*(1+[FREQ199045 [WOODBINE345.00]]) 60.500 59.500
CHNL# 122: 60*(1+[FREQ190320 [SALBRY 345.00]]) 60.500 59.500
CHNL# 121: 60*(1+[FREQ190197 [C.COVE 345.00]]) 60.500 59.500
CHNL# 120: 60*(1+[FREQ 70002 [ORRINGTN345.00]]) 60.500 59.500
0.0 1.0000 2.0000 3.0000 4.0000 5.0000 6.0000 7.0000 8.0000 9.0000 10.000
TIME (SECONDS)
SAT, JAN 31 2009 15:42
FREQUENCY HZ

2013 WINTER PEAK WITH DSM - DELIVER RESERVE
NS-NB=200; NB-NE=500; CBX=790; ONI=1015 ONS=704
1 PHASE FAULT ON L5041 AT 91H OPENS FROM 99H IN 9 CYCLE
91H-523 BREAKER FAILS NO BBU INSTALLED; ALL GENS ON
FILE: c108a-91H-523_BBU_mecl-2013WP-DSM-NS-200.out
CHNL# 146: [VOLT199280 [TUSKET A138.00]]
CHNL# 145: [VOLT199193 [1H-WAS 138.00]]
CHNL# 144: [VOLT199165 [TUFTCOVE138.00]]
CHNL# 143: [VOLT199135 [SPRNGHILL138.00]]
CHNL# 142: [VOLT199090 [50N-TREN138.00]]
CHNL# 141: [VOLT199051 [HASTINGS138.00]]
1.2000
0.70000
0.0
1.0000
2.0000
3.0000
4.0000
5.0000
6.0000
7.0000
8.0000
9.0000
10.000
TIME (SECONDS)
SAT, JAN 31 2009 15:42
138KV BUS VOLTS

2013 WINTER PEAK WITH DSM - DELIVER RESERVE
NS-NB=200; NB-NE=500; CBX=790; ONI=1015 ONS=704
1 PHASE FAULT ON L5041 AT 91H OPENS FROM 99H IN 9 CYCLE
91H-523 BREAKER FAILS NO BBU INSTALLED; ALL GENS ON
FILE: c108a-91H-523_BBU_mecl-2013WP-DSM-NS-200.out
CHNL# 140: [VOLT199240 [BWATER A230.00]]
CHNL# 139: [VOLT199200 [BRUSHY 230.00]]
CHNL# 138: [VOLT199130 [ONSLOW 230.00]]
CHNL# 137: [VOLT199050 [HASTINGS230.00]]
CHNL# 136: [VOLT199044 [PT.ACONI230.00]]
CHNL# 135: [VOLT199000 [LINGAN 230.00]]
1.2000
0.70000
0.0
1.0000
2.0000
3.0000
4.0000
5.0000
6.0000
7.0000
8.0000
9.0000
10.000
TIME (SECONDS)
SAT, JAN 31 2009 15:42
230KV BUS VOLTS

2013 WINTER PEAK WITH DSM - DELIVER RESERVE
NS-NB=200; NB-NE=500; CBX=790; ONI=1015 ONS=704
1 PHASE FAULT ON L5041 AT 91H OPENS FROM 99H IN 9 CYCLE
91H-523 BREAKER FAILS NO BBU INSTALLED; ALL GENS ON
FILE: c108a-91H-523_BBU_mecl-2013WP-DSM-NS-200.out
CHNL# 217: [L6533MW]
CHNL# 215: [L6503MW]
CHNL# 197: [L8003MW]
CHNL# 195: [L8004MW]
CHNL# 193: [L8001MW]
CHNL# 221: [L3001MW]
250.00
-250.0
500.00
0.0
1000.0
-1000.
0.0
1.0000
2.0000
3.0000
4.0000
5.0000
6.0000
7.0000
8.0000
9.0000
10.000
TIME (SECONDS)
SAT, JAN 31 2009 15:42
LINE FLOW MW

2013 WINTER PEAK WITH DSM - DELIVER RESERVE
NS-NB=200; NB-NE=500; CBX=790; ONI=1015 ONS=704
1 PHASE FAULT ON L5041 AT 91H OPENS FROM 99H IN 9 CYCLE
91H-523 BREAKER FAILS NO BBU INSTALLED; ALL GENS ON
FILE: c108a-91H-523_BBU_mecl-2013WP-DSM-NS-200.out
CHNL# 154: [IR141-DIGBYH69.0 VOLTS]
CHNL# 153: [IR137-STATIG25.0 VOLTS]
CHNL# 152: [IR114-GLENDH138.0 VOLTS]
CHNL# 151: [IR84-DALHOHV230.0 VOLTS]
CHNL# 150: [IR82 NUTBHV69.0 VOLTS]
CHNL# 149: [IR45 AMHERTP138.0 VOLTS]
1.2000
0.70000
0.0
1.0000
2.0000
3.0000
4.0000
5.0000
6.0000
7.0000
8.0000
9.0000
10.000
TIME (SECONDS)
SAT, JAN 31 2009 15:42
WIND BUS VOLTS

2013 WINTER PEAK WITH DSM - DELIVER RESERVE
NS-NB=200; NB-NE=500; CBX=790; ONI=1015 ONS=704
1 PHASE FAULT ON L5041 AT 91H OPENS FROM 99H IN 9 CYCLE
91H-523 BREAKER FAILS NO BBU INSTALLED; TC 1 OFF
FILE: c108b-91H-523_BBU_mrec-2013WP-DSM-NS-200.out
CHNL# 20: [ANGL199169 [TUFTCV3 14.400] [3]] [ANGL156661 [DARL G1 22.000] [1]
CHNL# 17: [ANGL199086 [TRENTON613.800] [6]] [ANGL156661 [DARL G1 22.000] [1]
CHNL# 16: [ANGL199085 [TRENTN5 13.800] [5]] [ANGL156661 [DARL G1 22.000] [1]
CHNL# 15: [ANGL199061 [TMP1 STO13.800] [1]] [ANGL156661 [DARL G1 22.000] [1]
CHNL# 13: [ANGL199043 [ACONIG1 20.000] [1]] [ANGL156661 [DARL G1 22.000] [1]
CHNL# 11: [ANGL199001 [LINGAN1 14.400] [1]] [ANGL156661 [DARL G1 22.000] [1]
100.00
-100.0
0.0
1.0000
2.0000
3.0000
4.0000
5.0000
6.0000
7.0000
8.0000
9.0000
10.000
TIME (SECONDS)
SAT, JAN 31 2009 15:42
NS ANGLE

2013 WINTER PEAK WITH DSM - DELIVER RESERVE
NS-NB=200; NB-NE=500; CBX=790; ONI=1015 ONS=704
1 PHASE FAULT ON L5041 AT 91H OPENS FROM 99H IN 9 CYCLE
91H-523 BREAKER FAILS NO BBU INSTALLED; TC 1 OFF
FILE: c108b-91H-523_BBU_mrec-2013WP-DSM-NS-200.out
CHNL# 10: [ANGL190472 [BLLDNG2 19.000] [1]] [ANGL156661 [DARL G1 22.000] [1]
CHNL# 6: [ANGL190456 [LEPRG1 26.000] [1]] [ANGL156661 [DARL G1 22.000] [1]
CHNL# 5: [ANGL190450 [MACTG1 13.800] [1]] [ANGL156661 [DARL G1 22.000] [1]
CHNL# 3: [ANGL126652 [RAV 3 22.000] [1]] [ANGL156661 [DARL G1 22.000] [1]
CHNL# 2: [ANGL101063 [MYST G7 22.000] [1]] [ANGL156661 [DARL G1 22.000] [1]
CHNL# 1: [ANGL100060 [MIS GT1 18.000] [1]] [ANGL156661 [DARL G1 22.000] [1]
100.00
-100.0
0.0
1.0000
2.0000
3.0000
4.0000
5.0000
6.0000
7.0000
8.0000
9.0000
10.000
TIME (SECONDS)
SAT, JAN 31 2009 15:42
"NE,NY,NB ANGLE"

2013 WINTER PEAK WITH DSM - DELIVER RESERVE
NS-NB=200; NB-NE=500; CBX=790; ONI=1015 ONS=704
1 PHASE FAULT ON L5041 AT 91H OPENS FROM 99H IN 9 CYCLE
91H-523 BREAKER FAILS NO BBU INSTALLED; TC 1 OFF
FILE: c108b-91H-523_BBU_mrec-2013WP-DSM-NS-200.out
CHNL# 59: [POWER199169 [TUFTCV3 14.400] [3]]
CHNL# 56: [POWER199086 [TRENTON613.800] [6]]
CHNL# 55: [POWER199085 [TRENTN5 13.800] [5]]
CHNL# 54: [POWER199061 [TMP1 STO13.800] [1]]
CHNL# 52: [POWER199043 [ACONIG1 20.000] [1]]
CHNL# 50: [POWER199001 [LINGAN1 14.400] [1]]
2.5000
0.0
-1.500
1.0000
2.0000
3.0000
4.0000
5.0000
6.0000
7.0000
8.0000
9.0000
10.000
TIME (SECONDS)
SAT, JAN 31 2009 15:42
NS MW

2013 WINTER PEAK WITH DSM - DELIVER RESERVE
NS-NB=200; NB-NE=500; CBX=790; ONI=1015 ONS=704
1 PHASE FAULT ON L5041 AT 91H OPENS FROM 99H IN 9 CYCLE
91H-523 BREAKER FAILS NO BBU INSTALLED; TC 1 OFF
FILE: c108b-91H-523_BBU_mrec-2013WP-DSM-NS-200.out
CHNL# 49: [POWER190472 [BLLDNG2 19.000] [1]]
CHNL# 45: [POWER190456 [LEPRG1 26.000] [1]]
CHNL# 44: [POWER190450 [MACTG1 13.800] [1]]
CHNL# 42: [POWER126652 [RAV 3 22.000] [1]]
CHNL# 41: [POWER101063 [MYST G7 22.000] [1]]
CHNL# 40: [POWER100060 [MIS GT1 18.000] [1]]
5.0000
0.0
4.0000
1.0000
2.0000
3.0000
4.0000
5.0000
6.0000
7.0000
8.0000
9.0000
10.000
TIME (SECONDS)
SAT, JAN 31 2009 15:42
"NE,NY,NB POWER"

2013 WINTER PEAK WITH DSM - DELIVER RESERVE
NS-NB=200; NB-NE=500; CBX=790; ONI=1015 ONS=704
1 PHASE FAULT ON L5041 AT 91H OPENS FROM 99H IN 9 CYCLE
91H-523 BREAKER FAILS NO BBU INSTALLED; TC 1 OFF
FILE: c108b-91H-523_BBU_mecl-2013WP-DSM-NS-200.out
CHNL# 119: [VARS IR141-DIGBY]
CHNL# 118: [VARS IR137-STATIA]
CHNL# 117: [VARS IR114-GLENDHU]
CHNL# 116: [VARS IR84-DALHOUSIE]
CHNL# 115: [VARS IR82_NUTTBY]
CHNL# 114: [VARS IR45_AMHERST]
TIME (SECONDS)
SAT, JAN 31 2009 15:42
NS WIND MV

2013 WINTER PEAK WITH DSM - DELIVER RESERVE
NS-NB=200; NB-NE=500; CBX=790; ONI=1015 ONS=704
1 PHASE FAULT ON L5041 AT 91H OPENS FROM 99H IN 9 CYCLE
91H-523 BREAKER FAILS NO BBU INSTALLED; TC 1 OFF
FILE: c108b-91H-523_BBU_mecl-2013WP-DSM-NS-200.out
CHNL# 79: [POWER IR141-DIGBY]
CHNL# 78: [POWER IR137-STATIA]
CHNL# 77: [POWER IR114-GLENDHU]
CHNL# 76: [POWER IR84-DALHOUSIE]
CHNL# 75: [POWER IR82_NUTTBY]
CHNL# 74: [POWER IR45_AMHERST]
TIME (SECONDS)
SAT, JAN 31 2009 15:42
NS WIND MW

2013 WINTER PEAK WITH DSM - DELIVER RESERVE
NS-NB=200; NB-NE=500; CBX=790; ONI=1015 ONS=704
1 PHASE FAULT ON L5041 AT 91H OPENS FROM 99H IN 9 CYCLE
91H-523 BREAKER FAILS NO BBU INSTALLED; TC 1 OFF
FILE: c108b-91H-523_BBU_mecl-2013WP-DSM-NS-200.out
CHNL# 133: [VOLT199125 [ONSLOW 345.00]]
CHNL# 132: [VOLT199120 [HOPEWELL 345.00]]
CHNL# 131: [VOLT199045 [WOODBINE345.00]]
CHNL# 130: [VOLT190320 [SALBRY 345.00]]
CHNL# 128: [VOLT190004 [KESWICK 345.00]]
CHNL# 127: [VOLT 70002 [ORRINGTN345.00]]
TIME (SECONDS)
SAT, JAN 31 2009 15:42
"345KV VOLTAGE"

2013 WINTER PEAK WITH DSM - DELIVER RESERVE
NS-NB=200; NB-NE=500; CBX=790; ONI=1015 ONS=704
1 PHASE FAULT ON L5041 AT 91H OPENS FROM 99H IN 9 CYCLE
91H-523 BREAKER FAILS NO BBU INSTALLED; TC 1 OFF
FILE: c108b-91H-523_BBU_mecl-2013WP-DSM-NS-200.out
CHNL# 125: 60*(1+[FREQ199125 [ONSLOW 345.00]])
CHNL# 124: 60*(1+[FREQ199120 [HOPEWELL 345.00]])
CHNL# 123: 60*(1+[FREQ199045 [WOODBINE345.00]])
CHNL# 122: 60*(1+[FREQ190320 [SALBRY 345.00]])
CHNL# 121: 60*(1+[FREQ190197 [C.COVE 345.00]])
CHNL# 120: 60*(1+[FREQ 70002 [ORRINGTN345.00]])
TIME (SECONDS)
SAT, JAN 31 2009 15:42
FREQUENCY HZ

2013 WINTER PEAK WITH DSM - DELIVER RESERVE
NS-NB=200; NB-NE=500; CBX=790; ONI=1015 ONS=704
1 PHASE FAULT ON L5041 AT 91H OPENS FROM 99H IN 9 CYCLE
91H-523 BREAKER FAILS NO BBU INSTALLED; TC 1 OFF
FILE: c108b-91H-523_BBU_mecl-2013WP-DSM-NS-200.out
CHNL# 146: [VOLT199280 [TUSKET A138.00]]
CHNL# 145: [VOLT199193 [1H-WAS 138.00]]
CHNL# 144: [VOLT199165 [TUFTCOVE138.00]]
CHNL# 143: [VOLT199135 [SPRNGHIL138.00]]
CHNL# 142: [VOLT199090 [50N-TREN138.00]]
CHNL# 141: [VOLT199051 [HASTINGS138.00]]
1.2000
0.70000
0.0
1.0000
2.0000
3.0000
4.0000
5.0000
6.0000
7.0000
8.0000
9.0000
10.000
TIME (SECONDS)
SAT, JAN 31 2009 15:42
138KV BUS VOLTS

2013 WINTER PEAK WITH DSM - DELIVER RESERVE
NS-NB=200; NB-NE=500; CBX=790; ONI=1015 ONS=704
1 PHASE FAULT ON L5041 AT 91H OPENS FROM 99H IN 9 CYCLE
91H-523 BREAKER FAILS NO BBU INSTALLED; TC 1 OFF
FILE: c108b-91H-523_BBU_mecl-2013WP-DSM-NS-200.out
CHNL# 140: [VOLT199240 [BWATER A230.00]]
CHNL# 139: [VOLT199200 [BRUSHY 230.00]]
CHNL# 138: [VOLT199130 [ONSLOW 230.00]]
CHNL# 137: [VOLT199050 [HASTINGS230.00]]
CHNL# 136: [VOLT199044 [PT.ACONI230.00]]
CHNL# 135: [VOLT199000 [LINGAN 230.00]]
1.2000
0.70000
0.0
1.0000
2.0000
3.0000
4.0000
5.0000
6.0000
7.0000
8.0000
9.0000
10.000
TIME (SECONDS)
SAT, JAN 31 2009 15:42
230KV BUS VOLTS

2013 WINTER PEAK WITH DSM - DELIVER RESERVE
NS-NB=200; NB-NE=500; CBX=790; ONI=1015 ONS=704
1 PHASE FAULT ON L5041 AT 91H OPENS FROM 99H IN 9 CYCLE
91H-523 BREAKER FAILS NO BBU INSTALLED; TC 1 OFF
FILE: c108b-91H-523_BBU_mecl-2013WP-DSM-NS-200.out
CHNL# 217: [L6533MW]
CHNL# 215: [L6503MW]
CHNL# 197: [L8003MW]
CHNL# 195: [L8004MW]
CHNL# 193: [L8001MW]
CHNL# 221: [L3001MW]
250.00
500.00
1000.0
-250.0
0.0
-1000.
0.0
1.0000
2.0000
3.0000
4.0000
5.0000
6.0000
7.0000
8.0000
9.0000
10.000
TIME (SECONDS)
SAT, JAN 31 2009 15:42
LINE FLOW MW

2013 WINTER PEAK WITH DSM - DELIVER RESERVE
NS-NB=200; NB-NE=500; CBX=790; ONI=1015 ONS=704
1 PHASE FAULT ON L5041 AT 91H OPENS FROM 99H IN 9 CYCLE
91H-523 BREAKER FAILS NO BBU INSTALLED; TC 1 OFF
FILE: c108b-91H-523_BBU_mecl-2013WP-DSM-NS-200.out
CHNL# 154: [IR141-DIGBYH69.0 VOLTS]
CHNL# 153: [IR137-STATIG25.0 VOLTS]
CHNL# 152: [IR114-GLENDH138.0 VOLTS]
CHNL# 151: [IR84-DALHOHV230.0 VOLTS]
CHNL# 150: [IR82 NUTBHV69.0 VOLTS]
CHNL# 149: [IR45 AMHERTP138.0 VOLTS]
1.2000
0.70000
0.0
1.0000
2.0000
3.0000
4.0000
5.0000
6.0000
7.0000
8.0000
9.0000
10.000
TIME (SECONDS)
SAT, JAN 31 2009 15:42
WIND BUS VOLTS

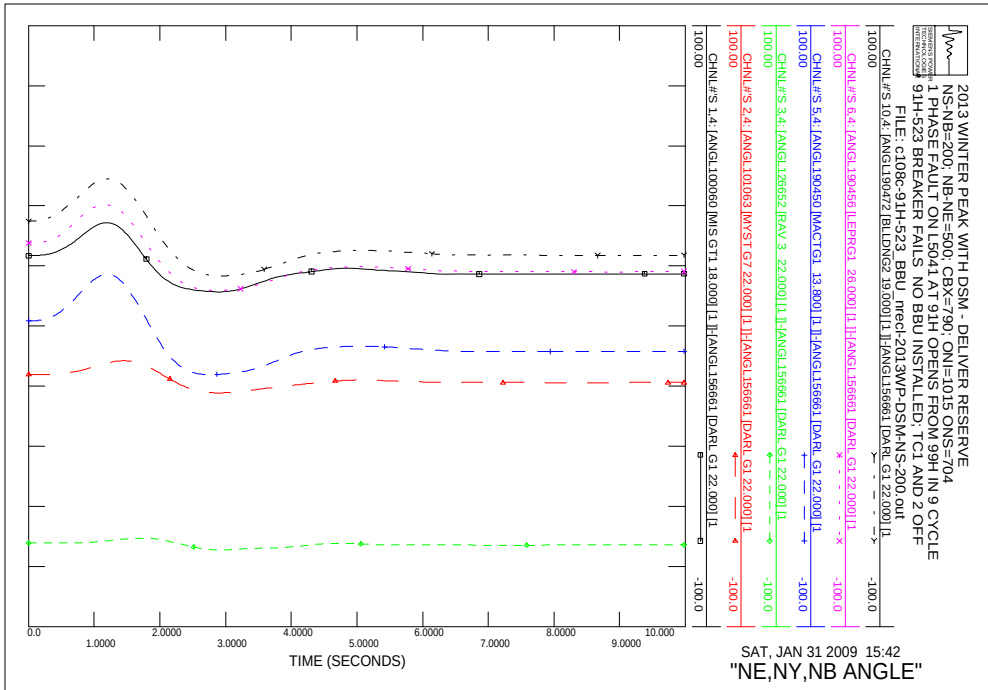
2013 WINTER PEAK WITH DSM - DELIVER RESERVE
NS-NB=200; NB-NE=500; CBX=790; ONI=1015 ONS=704
1 PHASE FAULT ON L5041 AT 91H OPENS FROM 99H IN 9 CYCLE
91H-523 BREAKER FAILS NO BBU INSTALLED; TC1 AND 2 OFF
FILE: c108c-91H-523_BBU_nrecl-2013WP-DSM-NS-200.out
CHNL#S 10,4: [ANGL190472 [BLLDNG2 19.000] [1]]-[ANGL156661 [DARL G1 22.000] [1
CHNL#S 6,4: [ANGL190456 [LEPRG1 26.000] [1]]-[ANGL156661 [DARL G1 22.000] [1
CHNL#S 5,4: [ANGL190450 [MACTG1 13.800] [1]]-[ANGL156661 [DARL G1 22.000] [1
CHNL#S 3,4: [ANGL126652 [RAV 3 22.000] [1]]-[ANGL156661 [DARL G1 22.000] [1
CHNL#S 2,4: [ANGL101063 [MYST G7 22.000] [1]]-[ANGL156661 [DARL G1 22.000] [1
CHNL#S 1,4: [ANGL100060 [MIS GT1 18.000] [1]]-[ANGL156661 [DARL G1 22.000] [1
100.00
-100.0
TIME (SECONDS)
SAT, JAN 31 2009 15:42
"NE,NY,NB ANGLE"

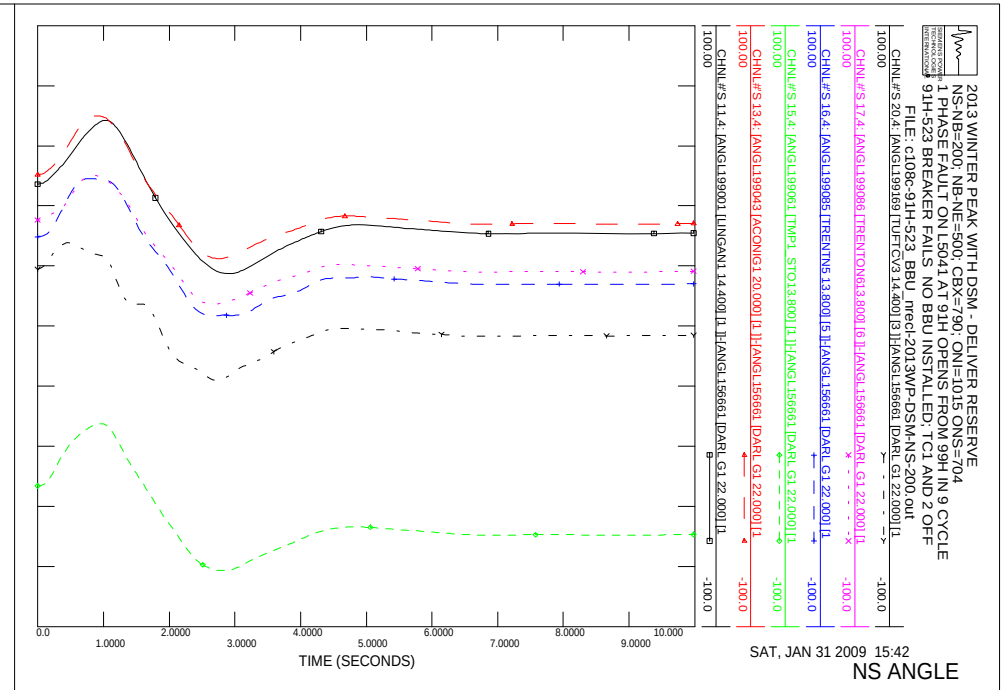
2013 WINTER PEAK WITH DSM - DELIVER RESERVE
NS-NB=200; NB-NE=500; CBX=790; ONI=1015 ONS=704
1 PHASE FAULT ON L5041 AT 91H OPENS FROM 99H IN 9 CYCLE
91H-523 BREAKER FAILS NO BBU INSTALLED; TC1 AND 2 OFF
FILE: c108c-91H-523_BBU_nrecl-2013WP-DSM-NS-200.out
CHNL#S 20,4: [ANGL199169 [TUFTCV3 14.400] [3]]-[ANGL156661 [DARL G1 22.000] [1
CHNL#S 17,4: [ANGL199086 [TRENTON613.800] [6]]-[ANGL156661 [DARL G1 22.000] [1
CHNL#S 16,4: [ANGL199085 [TRENTN5 13.800] [5]]-[ANGL156661 [DARL G1 22.000] [1
CHNL#S 15,4: [ANGL199061 [TMP1 STO13.800] [1]]-[ANGL156661 [DARL G1 22.000] [1
CHNL#S 13,4: [ANGL199043 [ACONIG1 20.000] [1]]-[ANGL156661 [DARL G1 22.000] [1
CHNL#S 11,4: [ANGL199001 [LINGAN1 14.400] [1]]-[ANGL156661 [DARL G1 22.000] [1
100.00
-100.0
TIME (SECONDS)
SAT, JAN 31 2009 15:42
NS ANGLE

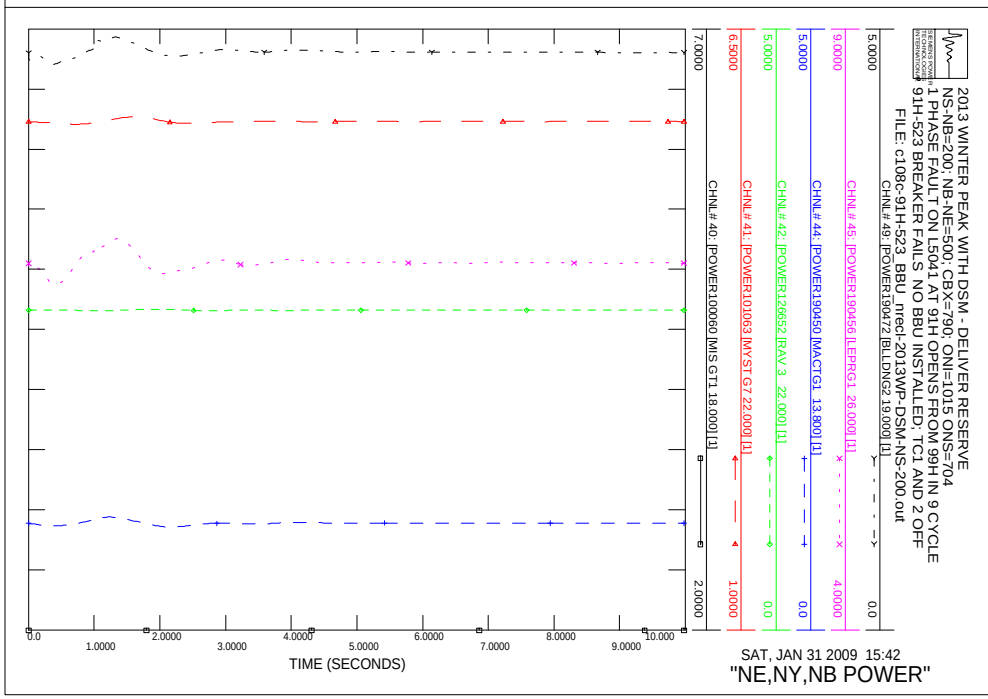
2013 WINTER PEAK WITH DSM - DELIVER RESERVE
NS-NB=200; NB-NE=500; CBX=790; ONI=1015 ONS=704
1 PHASE FAULT ON L5041 AT 91H OPENS FROM 99H IN 9 CYCLE
91H-523 BREAKER FAILS NO BBU INSTALLED; TC1 AND 2 OFF
FILE: c108c-91H-523_BBU_nrecl-2013WP-DSM-NS-200.out
CHNL# 49: [POWER190472 [BLLDNG2 19.000] [1]
CHNL# 45: [POWER190456 [LEPRG1 26.000] [1]
CHNL# 44: [POWER190450 [MACTG1 13.800] [1]
CHNL# 42: [POWER126652 [RAV 3 22.000] [1]
CHNL# 41: [POWER101063 [MYST G7 22.000] [1]
CHNL# 40: [POWER100060 [MIS GT1 18.000] [1]
5.0000
0.0
9.0000
4.0000
5.0000
0.0
5.0000
0.0
6.5000
1.0000
7.0000
2.0000
TIME (SECONDS)
SAT, JAN 31 2009 15:42
"NE,NY,NB POWER"

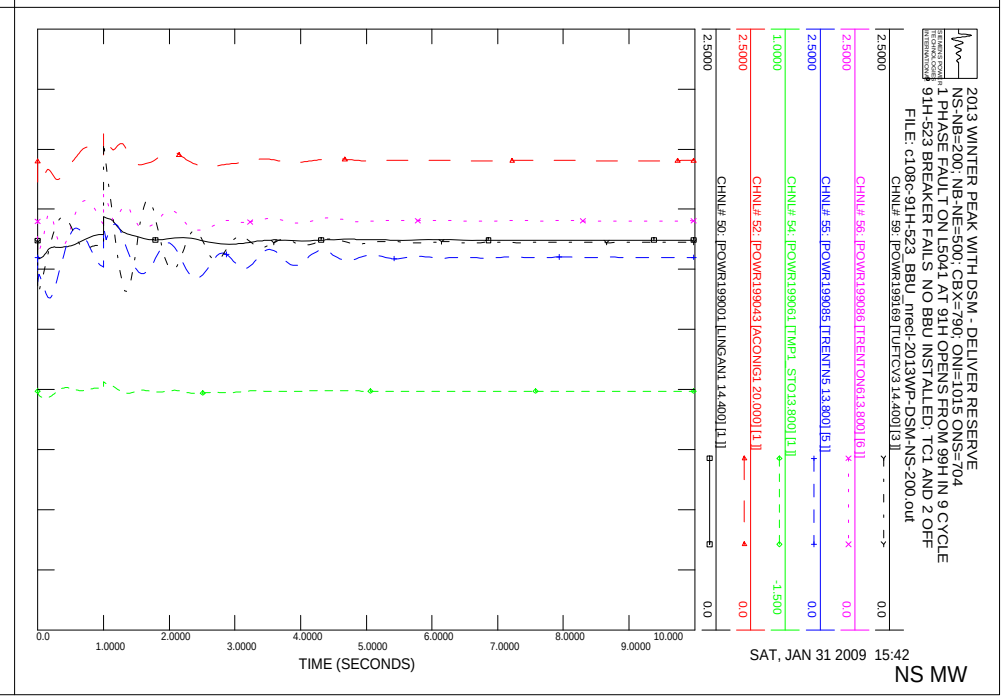
2013 WINTER PEAK WITH DSM - DELIVER RESERVE
NS-NB=200; NB-NE=500; CBX=790; ONI=1015 ONS=704
1 PHASE FAULT ON L5041 AT 91H OPENS FROM 99H IN 9 CYCLE
91H-523 BREAKER FAILS NO BBU INSTALLED; TC1 AND 2 OFF
FILE: c108c-91H-523_BBU_nrecl-2013WP-DSM-NS-200.out
CHNL# 59: [POWR199169 [TUFTCV3 14.400] [3]]
CHNL# 56: [POWR199086 [TRENTON613.800] [6]]
CHNL# 55: [POWR199085 [TRENTN5 13.800] [5]]
CHNL# 54: [POWR199061 [TMP1 STO13.800] [1]]
CHNL# 52: [POWR199043 [ACONIG1 20.000] [1]]
CHNL# 50: [POWR199001 [LINGAN1 14.400] [1]]
2.5000
0.0
2.5000
0.0
2.5000
0.0
1.0000
-1.500
2.5000
0.0
2.5000
0.0
TIME (SECONDS)
SAT, JAN 31 2009 15:42
NS MW

2013 WINTER PEAK WITH DSM - DELIVER RESERVE
NS-NB=200; NB-NE=500; CBX=790; ONI=1015 ONS=704
1 PHASE FAULT ON L5041 AT 91H OPENS FROM 99H IN 9 CYCLE
91H-523 BREAKER FAILS NO BBU INSTALLED; TC1 AND 2 OFF
FILE: c108c-91H-523_BBU_mecl-2013WP-DSM-NS-200.out
CHNL# 119: [VARS IR141-DIGBY]
CHNL# 118: [VARS IR137-STATIA]
CHNL# 117: [VARS IR114-GLENDHU]
CHNL# 116: [VARS IR84-DALHOUSIE]
CHNL# 115: [VARS IR82_NUTTBY]
CHNL# 114: [VARS IR45_AMHERST]
TIME (SECONDS)
SAT, JAN 31 2009 15:42
NS WIND MV

2013 WINTER PEAK WITH DSM - DELIVER RESERVE
NS-NB=200; NB-NE=500; CBX=790; ONI=1015 ONS=704
1 PHASE FAULT ON L5041 AT 91H OPENS FROM 99H IN 9 CYCLE
91H-523 BREAKER FAILS NO BBU INSTALLED; TC1 AND 2 OFF
FILE: c108c-91H-523_BBU_mecl-2013WP-DSM-NS-200.out
CHNL# 79: [POWER IR141-DIGBY]
CHNL# 78: [POWER IR137-STATIA]
CHNL# 77: [POWER IR114-GLENDHU]
CHNL# 76: [POWER IR84-DALHOUSIE]
CHNL# 75: [POWER IR82_NUTTBY]
CHNL# 74: [POWER IR45_AMHERST]
TIME (SECONDS)
SAT, JAN 31 2009 15:42
NS WIND MW

2013 WINTER PEAK WITH DSM - DELIVER RESERVE
NS-NB=200; NB-NE=500; CBX=790; ONI=1015 ONS=704
1 PHASE FAULT ON L5041 AT 91H OPENS FROM 99H IN 9 CYCLE
91H-523 BREAKER FAILS NO BBU INSTALLED; TC1 AND 2 OFF
FILE: c108c-91H-523_BBU_mecl-2013WP-DSM-NS-200.out
CHNL# 133: [VOLT199125 [ONSLOW 345.00]]
CHNL# 132: [VOLT199120 [HOPEWELL 345.00]]
CHNL# 131: [VOLT199045 [WOODBINE345.00]]
CHNL# 130: [VOLT190320 [SALBRY 345.00]]
CHNL# 128: [VOLT190004 [KESWICK 345.00]]
CHNL# 127: [VOLT 70002 [ORRINGTN345.00]]
TIME (SECONDS)
SAT, JAN 31 2009 15:42
"345KV VOLTAGE"

2013 WINTER PEAK WITH DSM - DELIVER RESERVE
NS-NB=200; NB-NE=500; CBX=790; ONI=1015 ONS=704
1 PHASE FAULT ON L5041 AT 91H OPENS FROM 99H IN 9 CYCLE
91H-523 BREAKER FAILS NO BBU INSTALLED; TC1 AND 2 OFF
FILE: c108c-91H-523_BBU_mecl-2013WP-DSM-NS-200.out
CHNL# 125: 60*(1+[FREQ199125 [ONSLOW 345.00]])
CHNL# 124: 60*(1+[FREQ199120 [HOPEWELL 345.00]])
CHNL# 123: 60*(1+[FREQ199045 [WOODBINE345.00]])
CHNL# 122: 60*(1+[FREQ190320 [SALBRY 345.00]])
CHNL# 121: 60*(1+[FREQ190197 [C.COVE 345.00]])
CHNL# 120: 60*(1+[FREQ 70002 [ORRINGTN345.00]])
TIME (SECONDS)
SAT, JAN 31 2009 15:42
FREQUENCY HZ

2013 WINTER PEAK WITH DSM - DELIVER RESERVE
NS-NB=200; NB-NE=500; CBX=790; ONI=1015 ONS=704
1 PHASE FAULT ON L5041 AT 91H OPENS FROM 99H IN 9 CYCLE
91H-523 BREAKER FAILS NO BBU INSTALLED; TC1 AND 2 OFF
FILE: c108c-91H-523_BBU_mecl-2013WP-DSM-NS-200.out
CHNL# 146: [VOLT199280 [TUSKET A138.00]]
CHNL# 145: [VOLT199193 [1H-WAS 138.00]]
CHNL# 144: [VOLT199165 [TUFTCOVE138.00]]
CHNL# 143: [VOLT199135 [SPRNGHILL138.00]]
CHNL# 142: [VOLT199090 [50N-TREN138.00]]
CHNL# 141: [VOLT199051 [HASTINGS138.00]]
1.2000
0.70000
0.0
1.0000
2.0000
3.0000
4.0000
5.0000
6.0000
7.0000
8.0000
9.0000
10.000
TIME (SECONDS)
SAT, JAN 31 2009 15:42
138KV BUS VOLTS

2013 WINTER PEAK WITH DSM - DELIVER RESERVE
NS-NB=200; NB-NE=500; CBX=790; ONI=1015 ONS=704
1 PHASE FAULT ON L5041 AT 91H OPENS FROM 99H IN 9 CYCLE
91H-523 BREAKER FAILS NO BBU INSTALLED; TC1 AND 2 OFF
FILE: c108c-91H-523_BBU_mecl-2013WP-DSM-NS-200.out
CHNL# 140: [VOLT199240 [BWATER A230.00]]
CHNL# 139: [VOLT199200 [BRUSHY 230.00]]
CHNL# 138: [VOLT199130 [ONSLOW 230.00]]
CHNL# 137: [VOLT199050 [HASTINGS230.00]]
CHNL# 136: [VOLT199044 [PT.ACONI230.00]]
CHNL# 135: [VOLT199000 [LINGAN 230.00]]
1.2000
0.70000
0.0
1.0000
2.0000
3.0000
4.0000
5.0000
6.0000
7.0000
8.0000
9.0000
10.000
TIME (SECONDS)
SAT, JAN 31 2009 15:42
230KV BUS VOLTS

2013 WINTER PEAK WITH DSM - DELIVER RESERVE
NS-NB=200; NB-NE=500; CBX=790; ONI=1015 ONS=704
1 PHASE FAULT ON L5041 AT 91H OPENS FROM 99H IN 9 CYCLE
91H-523 BREAKER FAILS NO BBU INSTALLED; TC1 AND 2 OFF
FILE: c108c-91H-523_BBU_mecl-2013WP-DSM-NS-200.out
CHNL# 217: [L6533MW]
CHNL# 215: [L6503MW]
CHNL# 197: [L8003MW]
CHNL# 195: [L8004MW]
CHNL# 193: [L8001MW]
CHNL# 221: [L3001MW]
250.00
-250.0
500.00
0.0
1000.0
-1000.
0.0
1.0000
2.0000
3.0000
4.0000
5.0000
6.0000
7.0000
8.0000
9.0000
10.000
TIME (SECONDS)
SAT, JAN 31 2009 15:42
LINE FLOW MW

2013 WINTER PEAK WITH DSM - DELIVER RESERVE
NS-NB=200; NB-NE=500; CBX=790; ONI=1015 ONS=704
1 PHASE FAULT ON L5041 AT 91H OPENS FROM 99H IN 9 CYCLE
91H-523 BREAKER FAILS NO BBU INSTALLED; TC1 AND 2 OFF
FILE: c108c-91H-523_BBU_mecl-2013WP-DSM-NS-200.out
CHNL# 154: [IR141-DIGBYH69.0 VOLTS]
CHNL# 153: [IR137-STATIG25.0 VOLTS]
CHNL# 152: [IR114-GLENDH138.0 VOLTS]
CHNL# 151: [IR84-DALHOHV230.0 VOLTS]
CHNL# 150: [IR82 NUTBHV69.0 VOLTS]
CHNL# 149: [IR45 AMHERTP138.0 VOLTS]
1.2000
0.70000
0.0
1.0000
2.0000
3.0000
4.0000
5.0000
6.0000
7.0000
8.0000
9.0000
10.000
TIME (SECONDS)
SAT, JAN 31 2009 15:42
WIND BUS VOLTS

2013 WINTER PEAK WITH DSM - DELIVER RESERVE
NS-NB=200; NB-NE=500; CBX=790; ONI=1015 ONS=704
1 PHASE FAULT ON L5041 AT 91H OPENS FROM 99H IN 9 CYCLE
91H-523 BREAKER FAILS NO BBU INSTALLED; ALL TC OFF
FILE: c108d-91H-523_BBU_mrec-2013WP-DSM-NS-200.out
CHNL# 20: [ANGL199169 [TUFTCV3 14.400] [3]] [ANGL156661 [DARL G1 22.000] [1]
CHNL# 17: [ANGL199086 [TRENTON613.800] [6]] [ANGL156661 [DARL G1 22.000] [1]
CHNL# 16: [ANGL199085 [TRENTN5 13.800] [5]] [ANGL156661 [DARL G1 22.000] [1]
CHNL# 15: [ANGL199061 [TMP1 STO13.800] [1]] [ANGL156661 [DARL G1 22.000] [1]
CHNL# 13: [ANGL199043 [ACONIG1 20.000] [1]] [ANGL156661 [DARL G1 22.000] [1]
CHNL# 11: [ANGAN1 14.400] [1]] [ANGL156661 [DARL G1 22.000] [1]
100.00
-100.0
0.0
1.0000
2.0000
3.0000
4.0000
5.0000
6.0000
7.0000
8.0000
9.0000
10.000
TIME (SECONDS)
SAT, JAN 31 2009 15:42
NS ANGLE

2013 WINTER PEAK WITH DSM - DELIVER RESERVE
NS-NB=200; NB-NE=500; CBX=790; ONI=1015 ONS=704
1 PHASE FAULT ON L5041 AT 91H OPENS FROM 99H IN 9 CYCLE
91H-523 BREAKER FAILS NO BBU INSTALLED; ALL TC OFF
FILE: c108d-91H-523_BBU_mrec-2013WP-DSM-NS-200.out
CHNL# 10: [ANGL190472 [BLLDNG2 19.000] [1]] [ANGL156661 [DARL G1 22.000] [1]
CHNL# 6: [ANGL190456 [LEPRG1 26.000] [1]] [ANGL156661 [DARL G1 22.000] [1]
CHNL# 5: [ANGL190450 [MACTG1 13.800] [1]] [ANGL156661 [DARL G1 22.000] [1]
CHNL# 3: [ANGL126652 [RAV 3 22.000] [1]] [ANGL156661 [DARL G1 22.000] [1]
CHNL# 2: [ANGL101063 [MYST G7 22.000] [1]] [ANGL156661 [DARL G1 22.000] [1]
CHNL# 1: [ANGL100060 [MIS GT1 18.000] [1]] [ANGL156661 [DARL G1 22.000] [1]
100.00
-100.0
0.0
1.0000
2.0000
3.0000
4.0000
5.0000
6.0000
7.0000
8.0000
9.0000
10.000
TIME (SECONDS)
SAT, JAN 31 2009 15:42
"NE,NY,NB ANGLE"

2013 WINTER PEAK WITH DSM - DELIVER RESERVE
NS-NB=200; NB-NE=500; CBX=790; ONI=1015 ONS=704
1 PHASE FAULT ON L5041 AT 91H OPENS FROM 99H IN 9 CYCLE
91H-523 BREAKER FAILS NO BBU INSTALLED; ALL TC OFF
FILE: c108d-91H-523_BBU_mrec-2013WP-DSM-NS-200.out
CHNL# 59: [POWER199169 [TUFTCV3 14.400] [3]]
CHNL# 56: [POWER199086 [TRENTON613.800] [6]]
CHNL# 55: [POWER199085 [TRENTN5 13.800] [5]]
CHNL# 54: [POWER199061 [TMP1 STO13.800] [1]]
CHNL# 52: [POWER199043 [ACONIG1 20.000] [1]]
CHNL# 50: [POWER199001 [LINGAN1 14.400] [1]]
2.5000
1.0000
-1.500
0.0
0.0
1.0000
2.0000
3.0000
4.0000
5.0000
6.0000
7.0000
8.0000
9.0000
10.000
TIME (SECONDS)
SAT, JAN 31 2009 15:42
NS MW

2013 WINTER PEAK WITH DSM - DELIVER RESERVE
NS-NB=200; NB-NE=500; CBX=790; ONI=1015 ONS=704
1 PHASE FAULT ON L5041 AT 91H OPENS FROM 99H IN 9 CYCLE
91H-523 BREAKER FAILS NO BBU INSTALLED; ALL TC OFF
FILE: c108d-91H-523_BBU_mrec-2013WP-DSM-NS-200.out
CHNL# 49: [POWER190472 [BLLDNG2 19.000] [1]]
CHNL# 45: [POWER190456 [LEPRG1 26.000] [1]]
CHNL# 44: [POWER190450 [MACTG1 13.800] [1]]
CHNL# 42: [POWER126652 [RAV 3 22.000] [1]]
CHNL# 41: [POWER101063 [MYST G7 22.000] [1]]
CHNL# 40: [POWER100060 [MIS GT1 18.000] [1]]
5.0000
9.0000
5.0000
5.0000
6.5000
7.0000
0.0
4.0000
0.0
0.0
1.0000
2.0000
2.0000
1.0000
2.0000
3.0000
4.0000
5.0000
6.0000
7.0000
8.0000
9.0000
10.000
TIME (SECONDS)
SAT, JAN 31 2009 15:42
"NE,NY,NB POWER"

2013 WINTER PEAK WITH DSM - DELIVER RESERVE
NS-NB=200; NB-NE=500; CBX=790; ONI=1015 ONS=704
1 PHASE FAULT ON L5041 AT 91H OPENS FROM 99H IN 9 CYCLE
91H-523 BREAKER FAILS NO BBU INSTALLED; ALL TC OFF
FILE: c108d-91H-523_BBU_mrec-2013WP-DSM-NS-200.out
CHNL# 119: [VARS IR141-DIGBY]
CHNL# 118: [VARS IR137-STATIA]
CHNL# 117: [VARS IR114-GLENDHU]
CHNL# 116: [VARS IR84-DALHOUSIE]
CHNL# 115: [VARS IR82_NUTTBY]
CHNL# 114: [VARS IR45_AMHERST]
0.50000
-0.5000
0.0
1.0000
2.0000
3.0000
4.0000
5.0000
6.0000
7.0000
8.0000
9.0000
10.000
TIME (SECONDS)
SAT, JAN 31 2009 15:42
NS WIND MV

2013 WINTER PEAK WITH DSM - DELIVER RESERVE
NS-NB=200; NB-NE=500; CBX=790; ONI=1015 ONS=704
1 PHASE FAULT ON L5041 AT 91H OPENS FROM 99H IN 9 CYCLE
91H-523 BREAKER FAILS NO BBU INSTALLED; ALL TC OFF
FILE: c108d-91H-523_BBU_mrec-2013WP-DSM-NS-200.out
CHNL# 79: [POWER IR141-DIGBY]
CHNL# 78: [POWER IR137-STATIA]
CHNL# 77: [POWER IR114-GLENDHU]
CHNL# 76: [POWER IR84-DALHOUSIE]
CHNL# 75: [POWER IR82_NUTTBY]
CHNL# 74: [POWER IR45_AMHERST]
1.0000
0.0
0.0
1.0000
2.0000
3.0000
4.0000
5.0000
6.0000
7.0000
8.0000
9.0000
10.000
TIME (SECONDS)
SAT, JAN 31 2009 15:42
NS WIND MW

2013 WINTER PEAK WITH DSM - DELIVER RESERVE
NS-NB=200; NB-NE=500; CBX=790; ONI=1015 ONS=704
1 PHASE FAULT ON L5041 AT 91H OPENS FROM 99H IN 9 CYCLE
91H-523 BREAKER FAILS NO BBU INSTALLED; ALL TC OFF
FILE: c108d-91H-523_BBU_mrec-2013WP-DSM-NS-200.out
CHNL# 133: [VOLT199125 IONSLOW 345.00]
CHNL# 132: [VOLT199120 IHOPEWELL345.00]
CHNL# 131: [VOLT199045 IWOODBINE345.00]
CHNL# 130: [VOLT190320 ISALBRY 345.00]
CHNL# 128: [VOLT190004 IKESWICK 345.00]
CHNL# 127: [VOLT 70002 IORRINGTN345.00]
1.1000
0.90000
1.0000
2.0000
3.0000
4.0000
5.0000
6.0000
7.0000
8.0000
9.0000
10.000
TIME (SECONDS)
SAT, JAN 31 2009 15:42
"345KV VOLTAGE"

2013 WINTER PEAK WITH DSM - DELIVER RESERVE
NS-NB=200; NB-NE=500; CBX=790; ONI=1015 ONS=704
1 PHASE FAULT ON L5041 AT 91H OPENS FROM 99H IN 9 CYCLE
91H-523 BREAKER FAILS NO BBU INSTALLED; ALL TC OFF
FILE: c108d-91H-523_BBU_mrec-2013WP-DSM-NS-200.out
CHNL# 125: 60*(1+[FREQ199125 IONSLOW 345.00])
CHNL# 124: 60*(1+[FREQ199120 IHOPEWELL345.00])
CHNL# 123: 60*(1+[FREQ199045 IWOODBINE345.00])
CHNL# 122: 60*(1+[FREQ190320 ISALBRY 345.00])
CHNL# 121: 60*(1+[FREQ190197 IC.COVE 345.00])
CHNL# 120: 60*(1+[FREQ 70002 IORRINGTN345.00])
60.500
59.500
1.0000
2.0000
3.0000
4.0000
5.0000
6.0000
7.0000
8.0000
9.0000
10.000
TIME (SECONDS)
SAT, JAN 31 2009 15:42
FREQUENCY HZ

2013 WINTER PEAK WITH DSM - DELIVER RESERVE
NS-NB=200; NB-NE=500; CBX=790; ONI=1015 ONS=704
1 PHASE FAULT ON L5041 AT 91H OPENS FROM 99H IN 9 CYCLE
91H-523 BREAKER FAILS NO BBU INSTALLED; ALL TC OFF
FILE: c108d-91H-523_BBU_mecl-2013WP-DSM-NS-200.out
CHNL# 145: [VOLT199193 [1H-WAS 138.00]]
CHNL# 144: [VOLT199165 [TUFTCOVE138.00]]
CHNL# 143: [VOLT199135 [SPRNGHIL138.00]]
CHNL# 142: [VOLT199090 [50N-TREN138.00]]
CHNL# 141: [VOLT199051 [HASTINGS138.00]]
TIME (SECONDS)
SAT, JAN 31 2009 15:42
138KV BUS VOLTS

2013 WINTER PEAK WITH DSM - DELIVER RESERVE
NS-NB=200; NB-NE=500; CBX=790; ONI=1015 ONS=704
1 PHASE FAULT ON L5041 AT 91H OPENS FROM 99H IN 9 CYCLE
91H-523 BREAKER FAILS NO BBU INSTALLED; ALL TC OFF
FILE: c108d-91H-523_BBU_mecl-2013WP-DSM-NS-200.out
CHNL# 139: [VOLT199200 [BRUSHY 230.00]]
CHNL# 138: [VOLT199130 [ONSLOW 230.00]]
CHNL# 137: [VOLT199050 [HASTINGS230.00]]
CHNL# 136: [VOLT199044 [PT.ACONI230.00]]
CHNL# 135: [VOLT199000 [LINGAN 230.00]]
TIME (SECONDS)
SAT, JAN 31 2009 15:42
230KV BUS VOLTS

2013 WINTER PEAK WITH DSM - DELIVER RESERVE
NS-NB=200; NB-NE=500; CBX=790; ONI=1015 ONS=704
1 PHASE FAULT ON L5041 AT 91H OPENS FROM 99H IN 9 CYCLE
91H-523 BREAKER FAILS NO BBU INSTALLED; ALL TC OFF
FILE: c108d-91H-523_BBU_mecl-2013WP-DSM-NS-200.out
CHNL# 217: [L6533MW]
CHNL# 215: [L6503MW]
CHNL# 197: [L8003MW]
CHNL# 195: [L8004MW]
CHNL# 193: [L8001MW]
CHNL# 221: [L3001MW]
TIME (SECONDS)
SAT, JAN 31 2009 15:42
LINE FLOW MW

2013 WINTER PEAK WITH DSM - DELIVER RESERVE
NS-NB=200; NB-NE=500; CBX=790; ONI=1015 ONS=704
1 PHASE FAULT ON L5041 AT 91H OPENS FROM 99H IN 9 CYCLE
91H-523 BREAKER FAILS NO BBU INSTALLED; ALL TC OFF
FILE: c108d-91H-523_BBU_mecl-2013WP-DSM-NS-200.out
CHNL# 154: [IR141-DIGBYH69.0 VOLTS]
CHNL# 153: [IR137-STATIG25.0 VOLTS]
CHNL# 152: [IR114-GLENDH138.0 VOLTS]
CHNL# 151: [IR84-DALHOHV230.0 VOLTS]
CHNL# 150: [IR82 NUTBHV69.0 VOLTS]
CHNL# 149: [IR45 AMHERTP138.0 VOLTS]
TIME (SECONDS)
SAT, JAN 31 2009 15:42
WIND BUS VOLTS

2013 WINTER PEAK WITH DSM - DELIVER RESERVE
NS-NB=200; NB-NE=500; CBX=790; ONI=1015 ONS=704
1 PHASE FAULT ON 101H-B62 101H-600 BREAKER FAILS
BBU OPERTES IN 15 CYCLES ENTIRE BUS NO RECLOSING
FILE: c109-101h-600_BBU_nrecl-2013WP-DSM-NS-200.out
CHNL# 20: [ANGL199169 [TUFTCV3 14.400] [3]] [ANGL156661 [DARL G1 22.000] [1
CHNL# 17: [ANGL199086 [TRENTON613.800] [6]] [ANGL156661 [DARL G1 22.000] [1
CHNL# 16: [ANGL199085 [TRENTN5 13.800] [5]] [ANGL156661 [DARL G1 22.000] [1
CHNL# 15: [ANGL199061 [TMP1 STO13.800] [1]] [ANGL156661 [DARL G1 22.000] [1
CHNL# 13: [ANGL199043 [ACONIG1 20.000] [1]] [ANGL156661 [DARL G1 22.000] [1
CHNL# 11: [ANGL199001 [LINGAN1 14.400] [1]] [ANGL156661 [DARL G1 22.000] [1
SAT, JAN 31 2009 15:42
TIME (SECONDS)
NS ANGLE

2013 WINTER PEAK WITH DSM - DELIVER RESERVE
NS-NB=200; NB-NE=500; CBX=790; ONI=1015 ONS=704
1 PHASE FAULT ON 101H-B62 101H-600 BREAKER FAILS
BBU OPERTES IN 15 CYCLES ENTIRE BUS NO RECLOSING
FILE: c109-101h-600_BBU_nrecl-2013WP-DSM-NS-200.out
CHNL# 10: [ANGL190472 [BLLDNG2 19.000] [1]] [ANGL156661 [DARL G1 22.000] [1
CHNL# 6: [ANGL190456 [LEPRG1 26.000] [1]] [ANGL156661 [DARL G1 22.000] [1
CHNL# 5: [ANGL190450 [MACTG1 13.800] [1]] [ANGL156661 [DARL G1 22.000] [1
CHNL# 3: [ANGL126652 [RAV 3 22.000] [1]] [ANGL156661 [DARL G1 22.000] [1
CHNL# 2: [ANGL101063 [MYST G7 22.000] [1]] [ANGL156661 [DARL G1 22.000] [1
CHNL# 1: [ANGL100060 [MIS GT1 18.000] [1]] [ANGL156661 [DARL G1 22.000] [1
SAT, JAN 31 2009 15:42
TIME (SECONDS)
"NE,NY,NB ANGLE"

2013 WINTER PEAK WITH DSM - DELIVER RESERVE
NS-NB=200; NB-NE=500; CBX=790; ONI=1015 ONS=704
1 PHASE FAULT ON 101H-B62 101H-600 BREAKER FAILS
BBU OPERTES IN 15 CYCLES ENTIRE BUS NO RECLOSING
FILE: c109-101h-600_BBU_nrecl-2013WP-DSM-NS-200.out
CHNL# 59: [POWR199169 [TUFTCV3 14.400] [3]]
CHNL# 56: [POWR199086 [TRENTON613.800] [6]]
CHNL# 55: [POWR199085 [TRENTN5 13.800] [5]]
CHNL# 54: [POWR199061 [TMP1 STO13.800] [1]]
CHNL# 52: [POWR199043 [ACONIG1 20.000] [1]]
CHNL# 50: [POWR199001 [LINGAN1 14.400] [1]]
SAT, JAN 31 2009 15:42
TIME (SECONDS)
NS MW

2013 WINTER PEAK WITH DSM - DELIVER RESERVE
NS-NB=200; NB-NE=500; CBX=790; ONI=1015 ONS=704
1 PHASE FAULT ON 101H-B62 101H-600 BREAKER FAILS
BBU OPERTES IN 15 CYCLES ENTIRE BUS NO RECLOSING
FILE: c109-101h-600_BBU_nrecl-2013WP-DSM-NS-200.out
CHNL# 49: [POWER190472 [BLLDNG2 19.000] [1]]
CHNL# 45: [POWER190456 [LEPRG1 26.000] [1]]
CHNL# 44: [POWER190450 [MACTG1 13.800] [1]]
CHNL# 42: [POWER126652 [RAV 3 22.000] [1]]
CHNL# 41: [POWER101063 [MYST G7 22.000] [1]]
CHNL# 40: [POWER100060 [MIS GT1 18.000] [1]]
SAT, JAN 31 2009 15:42
TIME (SECONDS)
"NE,NY,NB POWER"

2013 WINTER PEAK WITH DSM - DELIVER RESERVE
NS-NB=200; NB-NE=500; CBX=790; ONI=1015 ONS=704
1 PHASE FAULT ON 101H-B62 101H-600 BREAKER FAILS
BBU OPERTES IN 15 CYCLES ENTIRE BUS NO RECLOSING
FILE: c109-101h-600_BBU_nrecl-2013WP-DSM-NS-200.out
CHNL# 119: [VARS IR141-DIGBY]
CHNL# 118: [VARS IR137-STATIA]
CHNL# 117: [VARS IR114-GLENDHU]
CHNL# 116: [VARS IR84-DALHOUSIE]
CHNL# 115: [VARS IR82_NUTTBY]
CHNL# 114: [VARS IR45_AMHERST]
0.50000
-0.5000
TIME (SECONDS)
SAT, JAN 31 2009 15:42
NS WIND MV

2013 WINTER PEAK WITH DSM - DELIVER RESERVE
NS-NB=200; NB-NE=500; CBX=790; ONI=1015 ONS=704
1 PHASE FAULT ON 101H-B62 101H-600 BREAKER FAILS
BBU OPERTES IN 15 CYCLES ENTIRE BUS NO RECLOSING
FILE: c109-101h-600_BBU_nrecl-2013WP-DSM-NS-200.out
CHNL# 79: [POWER IR141-DIGBY]
CHNL# 78: [POWER IR137-STATIA]
CHNL# 77: [POWER IR114-GLENDHU]
CHNL# 76: [POWER IR84-DALHOUSIE]
CHNL# 75: [POWER IR82_NUTTBY]
CHNL# 74: [POWER IR45_AMHERST]
1.0000
0.0
TIME (SECONDS)
SAT, JAN 31 2009 15:42
NS WIND MW

2013 WINTER PEAK WITH DSM - DELIVER RESERVE
NS-NB=200; NB-NE=500; CBX=790; ONI=1015 ONS=704
1 PHASE FAULT ON 101H-B62 101H-600 BREAKER FAILS
BBU OPERTES IN 15 CYCLES ENTIRE BUS NO RECLOSING
FILE: c109-101h-600_BBU_nrecl-2013WP-DSM-NS-200.out
CHNL# 133: [VOLT199125 [ONSLOW 345.00]]
CHNL# 132: [VOLT199120 [HOPEWELL345.00]]
CHNL# 131: [VOLT199045 [WOODBINE345.00]]
CHNL# 130: [VOLT190320 [SALBRY 345.00]]
CHNL# 128: [VOLT190004 [KESWICK 345.00]]
CHNL# 127: [VOLT 70002 [ORRINGTN345.00]]
1.1000
0.90000
TIME (SECONDS)
SAT, JAN 31 2009 15:42
"345KV VOLTAGE"

2013 WINTER PEAK WITH DSM - DELIVER RESERVE
NS-NB=200; NB-NE=500; CBX=790; ONI=1015 ONS=704
1 PHASE FAULT ON 101H-B62 101H-600 BREAKER FAILS
BBU OPERTES IN 15 CYCLES ENTIRE BUS NO RECLOSING
FILE: c109-101h-600_BBU_nrecl-2013WP-DSM-NS-200.out
CHNL# 125: 60*(1+[FREQ199125 [ONSLOW 345.00]])
CHNL# 124: 60*(1+[FREQ199120 [HOPEWELL345.00]])
CHNL# 123: 60*(1+[FREQ199045 [WOODBINE345.00]])
CHNL# 122: 60*(1+[FREQ190320 [SALBRY 345.00]])
CHNL# 121: 60*(1+[FREQ190197 [C.COVE 345.00]])
CHNL# 120: 60*(1+[FREQ 70002 [ORRINGTN345.00]])
60.500
59.500
TIME (SECONDS)
SAT, JAN 31 2009 15:42
FREQUENCY HZ

2013 WINTER PEAK WITH DSM - DELIVER RESERVE
NS-NB=200; NB-NE=500; CBX=790; ONI=1015 ONS=704
1 PHASE FAULT ON 101H-B62 101H-600 BREAKER FAILS
BBU OPERTES IN 15 CYCLES ENTIRE BUS NO RECLOSING
FILE: c109-101h-600_BBU_nrecl-2013WP-DSM-NS-200.out
CHNL# 146: [VOLT199280 [TUSKET A138.00]]
CHNL# 145: [VOLT199193 [1H-WAS 138.00]]
CHNL# 144: [VOLT199165 [TUFTCOVE138.00]]
CHNL# 143: [VOLT199135 [SPRNGHILL138.00]]
CHNL# 142: [VOLT199090 [SON-TREN138.00]]
CHNL# 141: [VOLT199051 [HASTINGS138.00]]
SAT, JAN 31 2009 15:42
138KV BUS VOLTS
TIME (SECONDS)

2013 WINTER PEAK WITH DSM - DELIVER RESERVE
NS-NB=200; NB-NE=500; CBX=790; ONI=1015 ONS=704
1 PHASE FAULT ON 101H-B62 101H-600 BREAKER FAILS
BBU OPERTES IN 15 CYCLES ENTIRE BUS NO RECLOSING
FILE: c109-101h-600_BBU_nrecl-2013WP-DSM-NS-200.out
CHNL# 140: [VOLT199240 [BWATER A230.00]]
CHNL# 139: [VOLT199200 [BRUSHY 230.00]]
CHNL# 138: [VOLT199130 [ONSLOW 230.00]]
CHNL# 137: [VOLT199050 [HASTINGS230.00]]
CHNL# 136: [VOLT199044 [PT.ACONI230.00]]
CHNL# 135: [VOLT199000 [LINGAN 230.00]]
SAT, JAN 31 2009 15:42
230KV BUS VOLTS
TIME (SECONDS)

2013 WINTER PEAK WITH DSM - DELIVER RESERVE
NS-NB=200; NB-NE=500; CBX=790; ONI=1015 ONS=704
1 PHASE FAULT ON 101H-B62 101H-600 BREAKER FAILS
BBU OPERTES IN 15 CYCLES ENTIRE BUS NO RECLOSING
FILE: c109-101h-600_BBU_nrecl-2013WP-DSM-NS-200.out
CHNL# 217: [L6513MW]
CHNL# 215: [L6503MW]
CHNL# 197: [L8003MW]
CHNL# 195: [L8004MW]
CHNL# 193: [L8001MW]
CHNL# 221: [L3001MW]
SAT, JAN 31 2009 15:43
LINE FLOW MW
TIME (SECONDS)

2013 WINTER PEAK WITH DSM - DELIVER RESERVE
NS-NB=200; NB-NE=500; CBX=790; ONI=1015 ONS=704
1 PHASE FAULT ON 101H-B62 101H-600 BREAKER FAILS
BBU OPERTES IN 15 CYCLES ENTIRE BUS NO RECLOSING
FILE: c109-101h-600_BBU_nrecl-2013WP-DSM-NS-200.out
CHNL# 154: [IR141-DIGBYH69.0 VOLTS]
CHNL# 153: [IR137-STATIG25.0 VOLTS]
CHNL# 152: [IR114-GLENDH138.0 VOLTS]
CHNL# 151: [IR84-DALHOHV230.0 VOLTS]
CHNL# 150: [IR82 NUTBHV69.0 VOLTS]
CHNL# 149: [IR45 AMHERTP138.0 VOLTS]
SAT, JAN 31 2009 15:43
WIND BUS VOLTS
TIME (SECONDS)

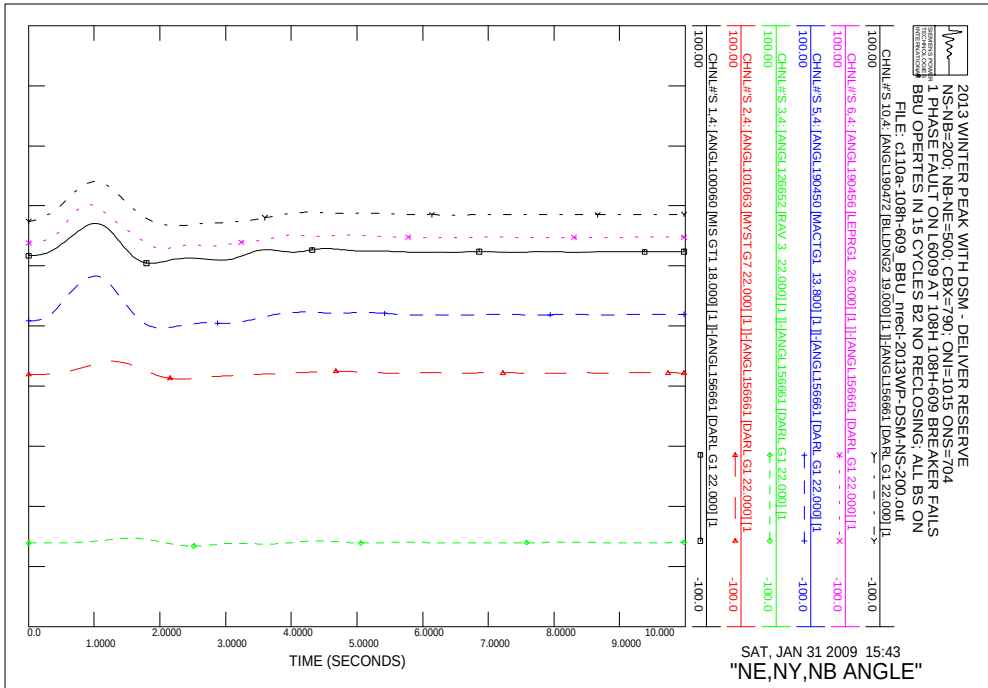
2013 WINTER PEAK WITH DSM - DELIVER RESERVE
NS-NB=200; NB-NE=500; CBX=790; ONI=1015 ONS=704
1 PHASE FAULT ON L6009 AT 108H 108H-609 BREAKER FAILS
BBU OPERTES IN 15 CYCLES B2 NO RECLOSING; ALL BS ON
FILE: c110a-108h-609_BBU_nrecl-2013WP-DSM-NS-200.out
CHNL#'S 10,4: [ANGL190472 [BLLDNG2 19.000] [1]]-[ANGL156661 [DARL G1 22.000] [1
CHNL#'S 6,4: [ANGL190456 [LEPRG1 26.000] [1]]-[ANGL156661 [DARL G1 22.000] [1
CHNL#'S 5,4: [ANGL190450 [MACTG1 13.800] [1]]-[ANGL156661 [DARL G1 22.000] [1
CHNL#'S 3,4: [ANGL126652 [RAV 3 22.000] [1]]-[ANGL156661 [DARL G1 22.000] [1
CHNL#'S 2,4: [ANGL101063 [MYST G7 22.000] [1]]-[ANGL156661 [DARL G1 22.000] [1
CHNL#'S 1,4: [ANGL100060 [MIS GT1 18.000] [1]]-[ANGL156661 [DARL G1 22.000] [1
100.00
-100.0
TIME (SECONDS)
SAT, JAN 31 2009 15:43
"NE,NY,NB ANGLE"

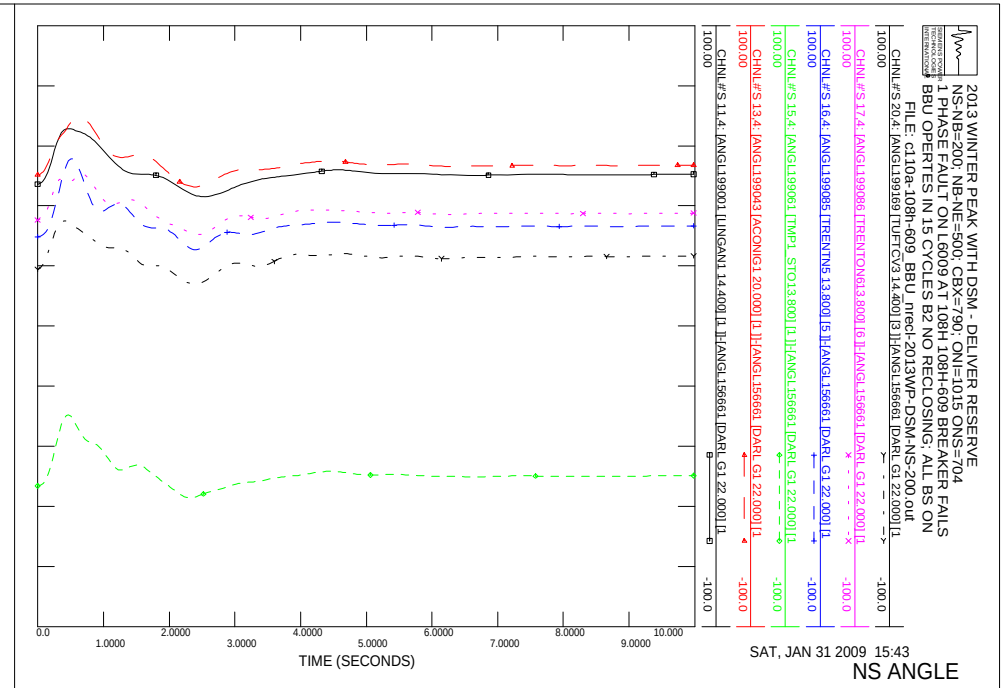
2013 WINTER PEAK WITH DSM - DELIVER RESERVE
NS-NB=200; NB-NE=500; CBX=790; ONI=1015 ONS=704
1 PHASE FAULT ON L6009 AT 108H 108H-609 BREAKER FAILS
BBU OPERTES IN 15 CYCLES B2 NO RECLOSING; ALL BS ON
FILE: c110a-108h-609_BBU_nrecl-2013WP-DSM-NS-200.out
CHNL#'S 20,4: [ANGL199169 [TUFTCV3 14.400] [3]]-[ANGL156661 [DARL G1 22.000] [1
CHNL#'S 17,4: [ANGL199086 [TRENTON613.800] [6]]-[ANGL156661 [DARL G1 22.000] [1
CHNL#'S 16,4: [ANGL199085 [TRENTN5 13.800] [5]]-[ANGL156661 [DARL G1 22.000] [1
CHNL#'S 15,4: [ANGL199061 [TMP1 STO13.800] [1]]-[ANGL156661 [DARL G1 22.000] [1
CHNL#'S 13,4: [ANGL199043 [ACONIG1 20.000] [1]]-[ANGL156661 [DARL G1 22.000] [1
CHNL#'S 11,4: [ANGL199001 [LINGAN1 14.400] [1]]-[ANGL156661 [DARL G1 22.000] [1
100.00
-100.0
TIME (SECONDS)
SAT, JAN 31 2009 15:43
NS ANGLE

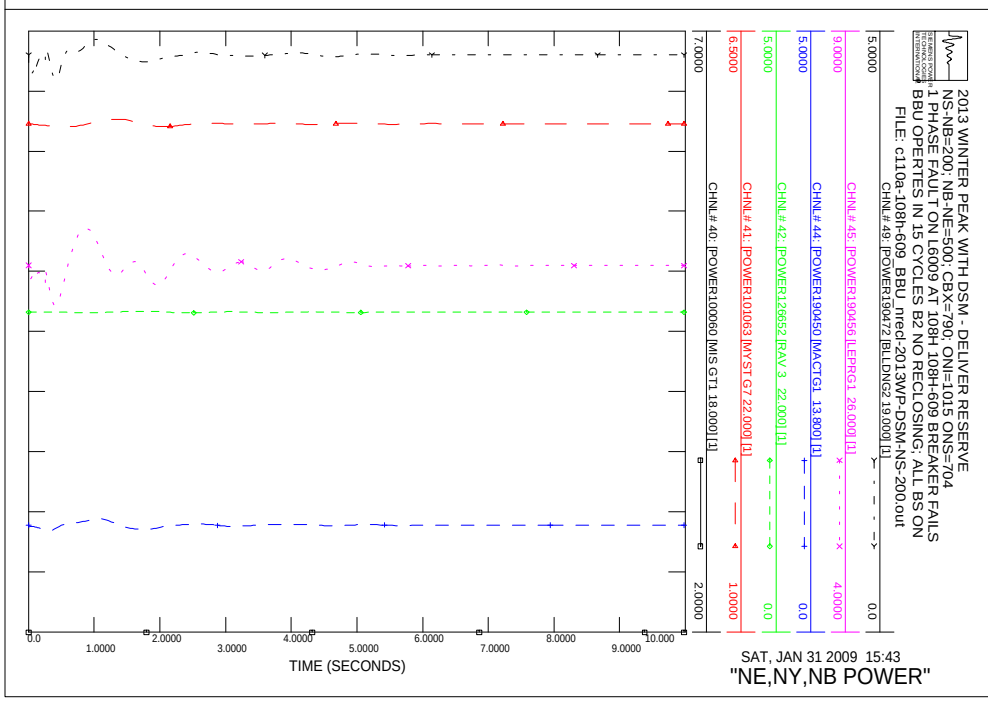
2013 WINTER PEAK WITH DSM - DELIVER RESERVE
NS-NB=200; NB-NE=500; CBX=790; ONI=1015 ONS=704
1 PHASE FAULT ON L6009 AT 108H 108H-609 BREAKER FAILS
BBU OPERTES IN 15 CYCLES B2 NO RECLOSING; ALL BS ON
FILE: c110a-108h-609_BBU_nrecl-2013WP-DSM-NS-200.out
CHNL# 49: [POWER190472 [BLLDNG2 19.000] [1]
CHNL# 45: [POWER190456 [LEPRG1 26.000] [1]
CHNL# 44: [POWER190450 [MACTG1 13.800] [1]
CHNL# 42: [POWER126652 [RAV 3 22.000] [1]
CHNL# 41: [POWER101063 [MYST G7 22.000] [1]
CHNL# 40: [POWER100060 [MIS GT1 18.000] [1]
5.0000
0.0
TIME (SECONDS)
SAT, JAN 31 2009 15:43
"NE,NY,NB POWER"

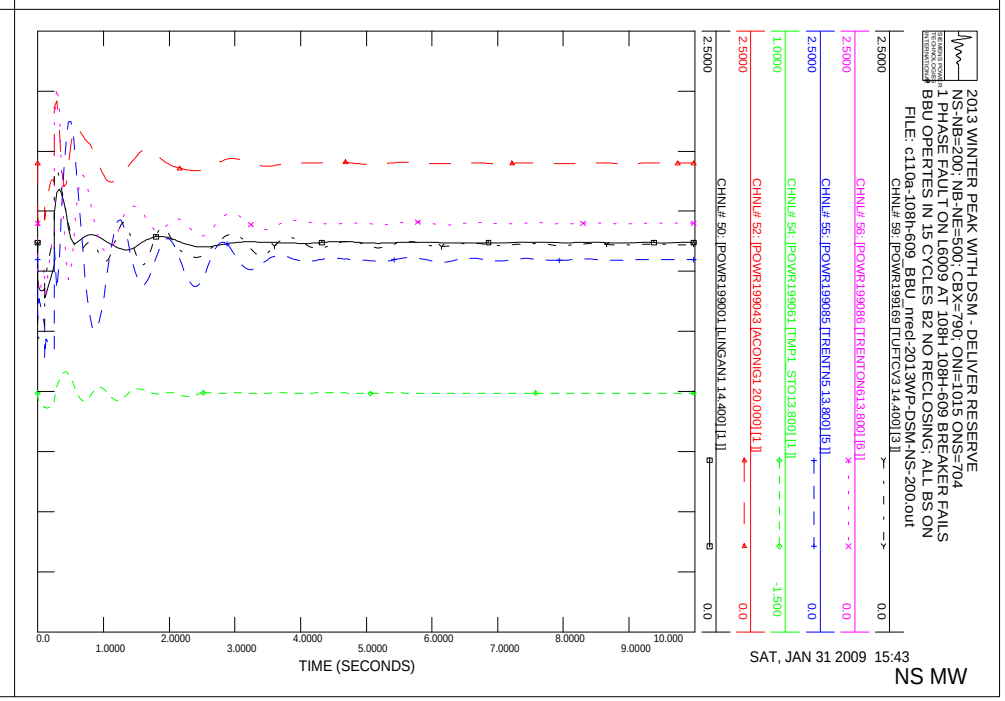
2013 WINTER PEAK WITH DSM - DELIVER RESERVE
NS-NB=200; NB-NE=500; CBX=790; ONI=1015 ONS=704
1 PHASE FAULT ON L6009 AT 108H 108H-609 BREAKER FAILS
BBU OPERTES IN 15 CYCLES B2 NO RECLOSING; ALL BS ON
FILE: c110a-108h-609_BBU_nrecl-2013WP-DSM-NS-200.out
CHNL# 59: [POWR199169 [TUFTCV3 14.400] [3]]
CHNL# 56: [POWR199086 [TRENTON613.800] [6]]
CHNL# 55: [POWR199085 [TRENTN5 13.800] [5]]
CHNL# 54: [POWR199061 [TMP1 STO13.800] [1]]
CHNL# 52: [POWR199043 [ACONIG1 20.000] [1]]
CHNL# 50: [POWR199001 [LINGAN1 14.400] [1]]
2.5000
0.0
TIME (SECONDS)
SAT, JAN 31 2009 15:43
NS MW

2013 WINTER PEAK WITH DSM - DELIVER RESERVE
NS-NB=200; NB-NE=500; CBX=790; ONI=1015 ONS=704
1 PHASE FAULT ON L6009 AT 108H 108H-609 BREAKER FAILS
BBU OPERTES IN 15 CYCLES B2 NO RECLOSING; ALL BS ON
FILE: c110a-108h-609_BBU_nrecl-2013WP-DSM-NS-200.out
CHNL# 119: [VARS IR141-DIGBY]
CHNL# 118: [VARS IR137-STATIA]
CHNL# 117: [VARS IR114-GLENDHU]
CHNL# 116: [VARS IR84-DALHOUSIE]
CHNL# 115: [VARS IR82_NUTTBY]
CHNL# 114: [VARS IR45_AMHERST]
TIME (SECONDS)
SAT, JAN 31 2009 15:43
NS WIND MV

2013 WINTER PEAK WITH DSM - DELIVER RESERVE
NS-NB=200; NB-NE=500; CBX=790; ONI=1015 ONS=704
1 PHASE FAULT ON L6009 AT 108H 108H-609 BREAKER FAILS
BBU OPERTES IN 15 CYCLES B2 NO RECLOSING; ALL BS ON
FILE: c110a-108h-609_BBU_nrecl-2013WP-DSM-NS-200.out
CHNL# 79: [POWER IR141-DIGBY]
CHNL# 78: [POWER IR137-STATIA]
CHNL# 77: [POWER IR114-GLENDHU]
CHNL# 76: [POWER IR84-DALHOUSIE]
CHNL# 75: [POWER IR82_NUTTBY]
CHNL# 74: [POWER IR45_AMHERST]
TIME (SECONDS)
SAT, JAN 31 2009 15:43
NS WIND MW

2013 WINTER PEAK WITH DSM - DELIVER RESERVE
NS-NB=200; NB-NE=500; CBX=790; ONI=1015 ONS=704
1 PHASE FAULT ON L6009 AT 108H 108H-609 BREAKER FAILS
BBU OPERTES IN 15 CYCLES B2 NO RECLOSING; ALL BS ON
FILE: c110a-108h-609_BBU_nrecl-2013WP-DSM-NS-200.out
CHNL# 133: [VOLT199125 IONSLOW 345.00]
CHNL# 132: [VOLT199120 [HOPEWELL 345.00]
CHNL# 131: [VOLT199045 [WOODBINE345.00]]
CHNL# 130: [VOLT190320 [SALBRY 345.00]]
CHNL# 128: [VOLT190004 [KESWICK 345.00]]
CHNL# 127: [VOLT 70002 [ORRINGTN345.00]]
TIME (SECONDS)
SAT, JAN 31 2009 15:43
"345KV VOLTAGE"

2013 WINTER PEAK WITH DSM - DELIVER RESERVE
NS-NB=200; NB-NE=500; CBX=790; ONI=1015 ONS=704
1 PHASE FAULT ON L6009 AT 108H 108H-609 BREAKER FAILS
BBU OPERTES IN 15 CYCLES B2 NO RECLOSING; ALL BS ON
FILE: c110a-108h-609_BBU_nrecl-2013WP-DSM-NS-200.out
CHNL# 125: 60*(1+[FREQ199125 [ONSLOW 345.00]])
CHNL# 124: 60*(1+[FREQ199120 [HOPEWELL 345.00]])
CHNL# 123: 60*(1+[FREQ199045 [WOODBINE345.00]])
CHNL# 122: 60*(1+[FREQ190320 [SALBRY 345.00]])
CHNL# 121: 60*(1+[FREQ190197 [C.COVE 345.00]])
CHNL# 120: 60*(1+[FREQ 70002 [ORRINGTN345.00]])
TIME (SECONDS)
SAT, JAN 31 2009 15:43
FREQUENCY HZ

2013 WINTER PEAK WITH DSM - DELIVER RESERVE
NS-NB=200; NB-NE=500; CBX=790; ONI=1015 ONS=704
1 PHASE FAULT ON L6009 AT 108H 108H-609 BREAKER FAILS
BBU OPERTES IN 15 CYCLES B2 NO RECLOSING; ALL BS ON
FILE: c110a-108h-609_BBU_nrecl-2013WP-DSM-NS-200.out
CHNL# 146: [VOLT199280 [TUSKET A138.00]]
CHNL# 145: [VOLT199193 [HHWAS 138.00]]
CHNL# 144: [VOLT199165 [TUFTCOVE138.00]]
CHNL# 143: [VOLT199138: [SPRNGHILL138.00]]
CHNL# 142: [VOLT199090 [SON-TREN138.00]]
CHNL# 141: [VOLT199051 [HASTINGS138.00]]
1.2000
0.70000
0.0
1.0000
2.0000
3.0000
4.0000
5.0000
6.0000
7.0000
8.0000
9.0000
10.000
TIME (SECONDS)
SAT, JAN 31 2009 15:43
138KV BUS VOLTS

2013 WINTER PEAK WITH DSM - DELIVER RESERVE
NS-NB=200; NB-NE=500; CBX=790; ONI=1015 ONS=704
1 PHASE FAULT ON L6009 AT 108H 108H-609 BREAKER FAILS
BBU OPERTES IN 15 CYCLES B2 NO RECLOSING; ALL BS ON
FILE: c110a-108h-609_BBU_nrecl-2013WP-DSM-NS-200.out
CHNL# 140: [VOLT199240 [BWATER A230.00]]
CHNL# 139: [VOLT199200 [BRUSHY 230.00]]
CHNL# 138: [VOLT199130 [ONSLOW 230.00]]
CHNL# 137: [VOLT199050 [HASTINGS230.00]]
CHNL# 136: [VOLT199044 [PT.ACONI230.00]]
CHNL# 135: [VOLT199000 [LINGAN 230.00]]
1.2000
0.70000
0.0
1.0000
2.0000
3.0000
4.0000
5.0000
6.0000
7.0000
8.0000
9.0000
10.000
TIME (SECONDS)
SAT, JAN 31 2009 15:43
230KV BUS VOLTS

2013 WINTER PEAK WITH DSM - DELIVER RESERVE
NS-NB=200; NB-NE=500; CBX=790; ONI=1015 ONS=704
1 PHASE FAULT ON L6009 AT 108H 108H-609 BREAKER FAILS
BBU OPERTES IN 15 CYCLES B2 NO RECLOSING; ALL BS ON
FILE: c110a-108h-609_BBU_nrecl-2013WP-DSM-NS-200.out
CHNL# 217: [L6533MW]
CHNL# 215: [L6503MW]
CHNL# 197: [L8003MW]
CHNL# 195: [L8004MW]
CHNL# 193: [L8001MW]
CHNL# 221: [L3001MW]
250.00
500.00
1000.0
0.0
-250.0
-1000.
0.0
1.0000
2.0000
3.0000
4.0000
5.0000
6.0000
7.0000
8.0000
9.0000
10.000
TIME (SECONDS)
SAT, JAN 31 2009 15:43
LINE FLOW MW

2013 WINTER PEAK WITH DSM - DELIVER RESERVE
NS-NB=200; NB-NE=500; CBX=790; ONI=1015 ONS=704
1 PHASE FAULT ON L6009 AT 108H 108H-609 BREAKER FAILS
BBU OPERTES IN 15 CYCLES B2 NO RECLOSING; ALL BS ON
FILE: c110a-108h-609_BBU_nrecl-2013WP-DSM-NS-200.out
CHNL# 154: [IR141-DIGBYH69.0 VOLTS]
CHNL# 153: [IR137-STATIG25.0 VOLTS]
CHNL# 152: [IR114-GLENDH138.0 VOLTS]
CHNL# 151: [IR84-DALHOHV230.0 VOLTS]
CHNL# 150: [IR82 NUTBHV69.0 VOLTS]
CHNL# 149: [IR45 AMHERTP138.0 VOLTS]
1.2000
0.70000
0.0
1.0000
2.0000
3.0000
4.0000
5.0000
6.0000
7.0000
8.0000
9.0000
10.000
TIME (SECONDS)
SAT, JAN 31 2009 15:43
WIND BUS VOLTS

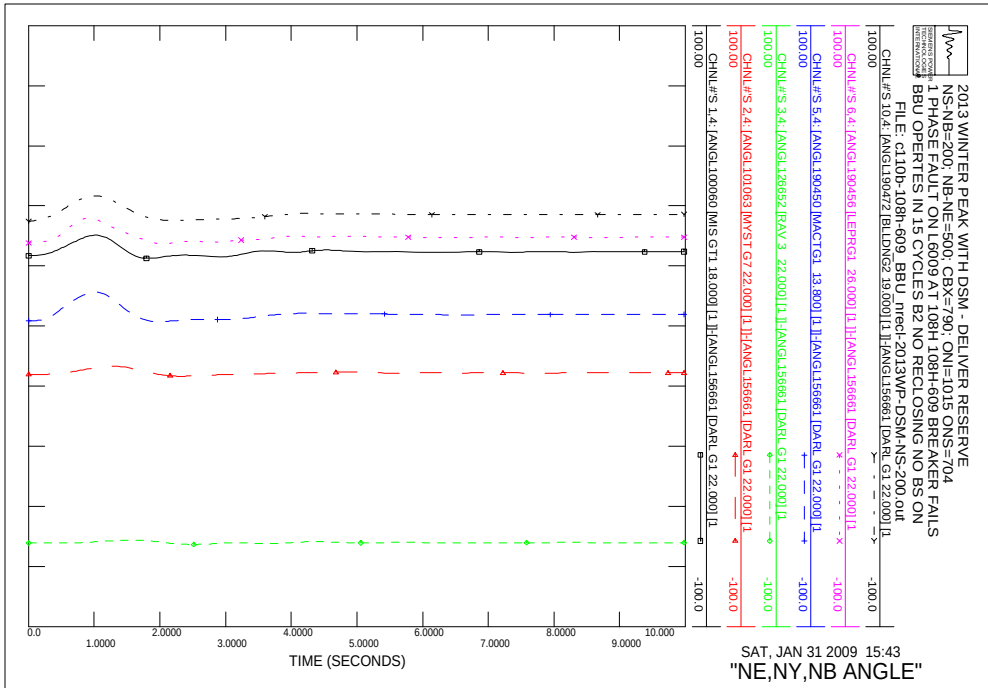
2013 WINTER PEAK WITH DSM - DELIVER RESERVE
NS-NB=200; NB-NE=500; CBX=790; ONI=1015 ONS=704
1 PHASE FAULT ON L6009 AT 108H 108H-609 BREAKER FAILS
BBU OPERTES IN 15 CYCLES B2 NO RECLOSING NO BS ON
FILE: c110b-108h-609_BBU_nrecl-2013WP-DSM-NS-200.out
CHNL#'S 10,4: [ANGL190472 [BLLDNG2 19.000] [1]]-[ANGL156661 [DARL G1 22.000] [1
CHNL#'S 6,4: [ANGL190456 [LEPRG1 26.000] [1]]-[ANGL156661 [DARL G1 22.000] [1
CHNL#'S 5,4: [ANGL190450 [MACTG1 13.800] [1]]-[ANGL156661 [DARL G1 22.000] [1
CHNL#'S 3,4: [ANGL126652 [RAV 3 22.000] [1]]-[ANGL156661 [DARL G1 22.000] [1
CHNL#'S 2,4: [ANGL101063 [MYST G7 22.000] [1]]-[ANGL156661 [DARL G1 22.000] [1
CHNL#'S 1,4: [ANGL100060 [MIS GT1 18.000] [1]]-[ANGL156661 [DARL G1 22.000] [1
100.00
-100.0
0.0
1.0000
2.0000
3.0000
4.0000
5.0000
6.0000
7.0000
8.0000
9.0000
10.000
TIME (SECONDS)
SAT, JAN 31 2009 15:43
"NE,NY,NB ANGLE"

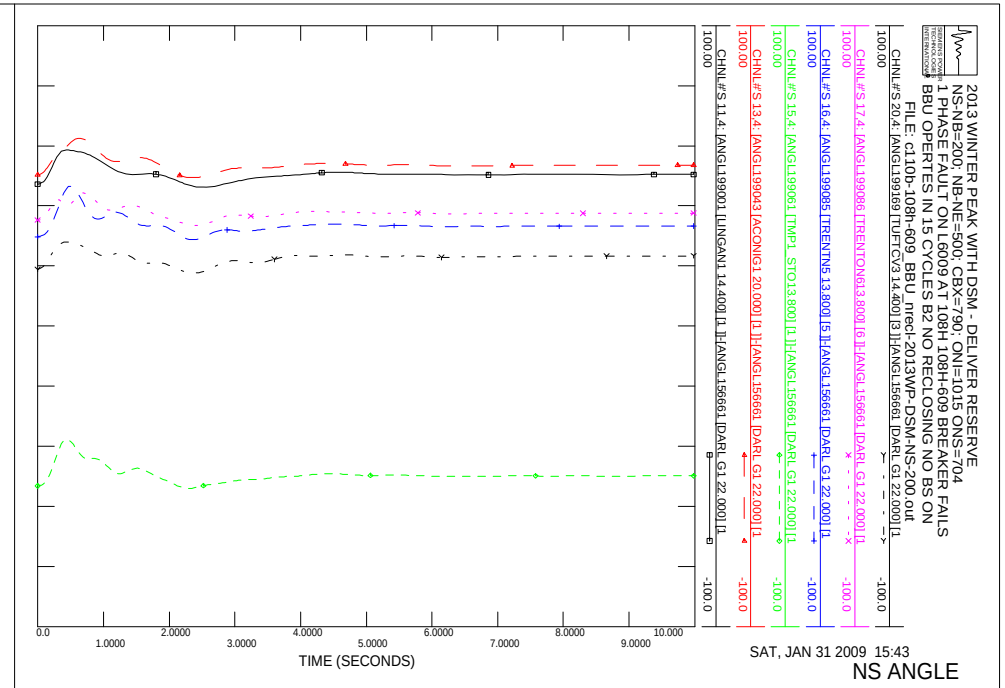
2013 WINTER PEAK WITH DSM - DELIVER RESERVE
NS-NB=200; NB-NE=500; CBX=790; ONI=1015 ONS=704
1 PHASE FAULT ON L6009 AT 108H 108H-609 BREAKER FAILS
BBU OPERTES IN 15 CYCLES B2 NO RECLOSING NO BS ON
FILE: c110b-108h-609_BBU_nrecl-2013WP-DSM-NS-200.out
CHNL#'S 20,4: [ANGL199169 [TUFTCV3 14.400] [3]]-[ANGL156661 [DARL G1 22.000] [1
CHNL#'S 17,4: [ANGL199086 [TRENTON613.800] [6]]-[ANGL156661 [DARL G1 22.000] [1
CHNL#'S 16,4: [ANGL199085 [TRENTN5 13.800] [5]]-[ANGL156661 [DARL G1 22.000] [1
CHNL#'S 15,4: [ANGL199061 [TMP1 STO13.800] [1]]-[ANGL156661 [DARL G1 22.000] [1
CHNL#'S 13,4: [ANGL199043 [ACONIG1 20.000] [1]]-[ANGL156661 [DARL G1 22.000] [1
CHNL#'S 11,4: [ANGL199001 [LINGAN1 14.400] [1]]-[ANGL156661 [DARL G1 22.000] [1
100.00
-100.0
0.0
1.0000
2.0000
3.0000
4.0000
5.0000
6.0000
7.0000
8.0000
9.0000
10.000
TIME (SECONDS)
SAT, JAN 31 2009 15:43
NS ANGLE

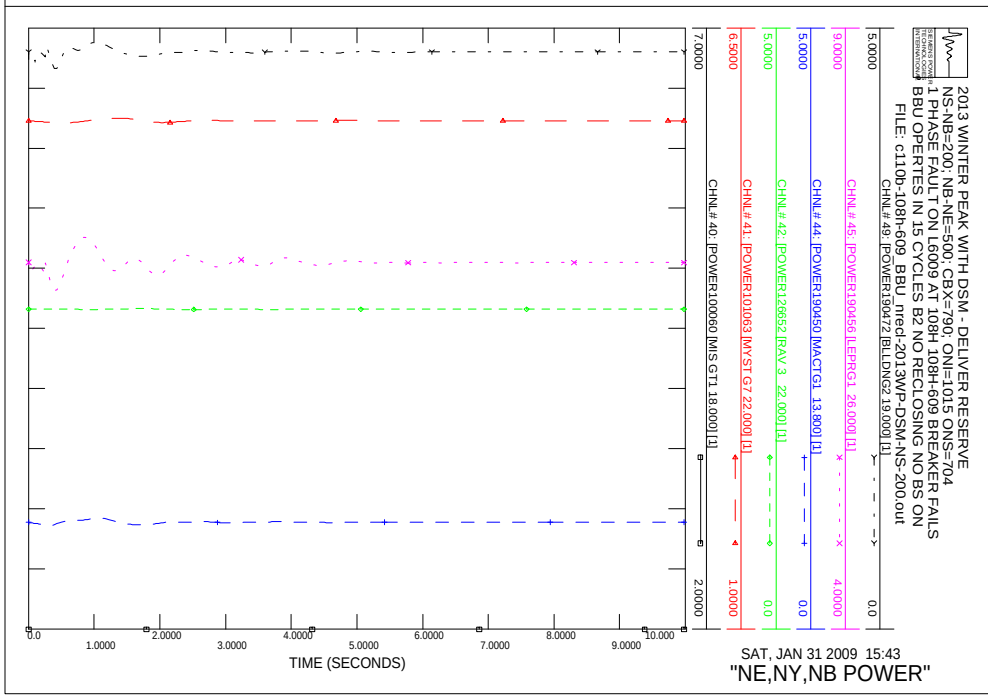
2013 WINTER PEAK WITH DSM - DELIVER RESERVE
NS-NB=200; NB-NE=500; CBX=790; ONI=1015 ONS=704
1 PHASE FAULT ON L6009 AT 108H 108H-609 BREAKER FAILS
BBU OPERTES IN 15 CYCLES B2 NO RECLOSING NO BS ON
FILE: c110b-108h-609_BBU_nrecl-2013WP-DSM-NS-200.out
CHNL# 49: [POWER190472 [BLLDNG2 19.000] [1]
CHNL# 45: [POWER190456 [LEPRG1 26.000] [1]
CHNL# 44: [POWER190450 [MACTG1 13.800] [1]
CHNL# 42: [POWER126652 [RAV 3 22.000] [1]
CHNL# 41: [POWER101063 [MYST G7 22.000] [1]
CHNL# 40: [POWER100060 [MIS GT1 18.000] [1]
5.0000
0.0
9.0000
4.0000
5.0000
0.0
5.0000
0.0
6.5000
1.0000
7.0000
2.0000
0.0
1.0000
2.0000
3.0000
4.0000
5.0000
6.0000
7.0000
8.0000
9.0000
10.000
TIME (SECONDS)
SAT, JAN 31 2009 15:43
"NE,NY,NB POWER"

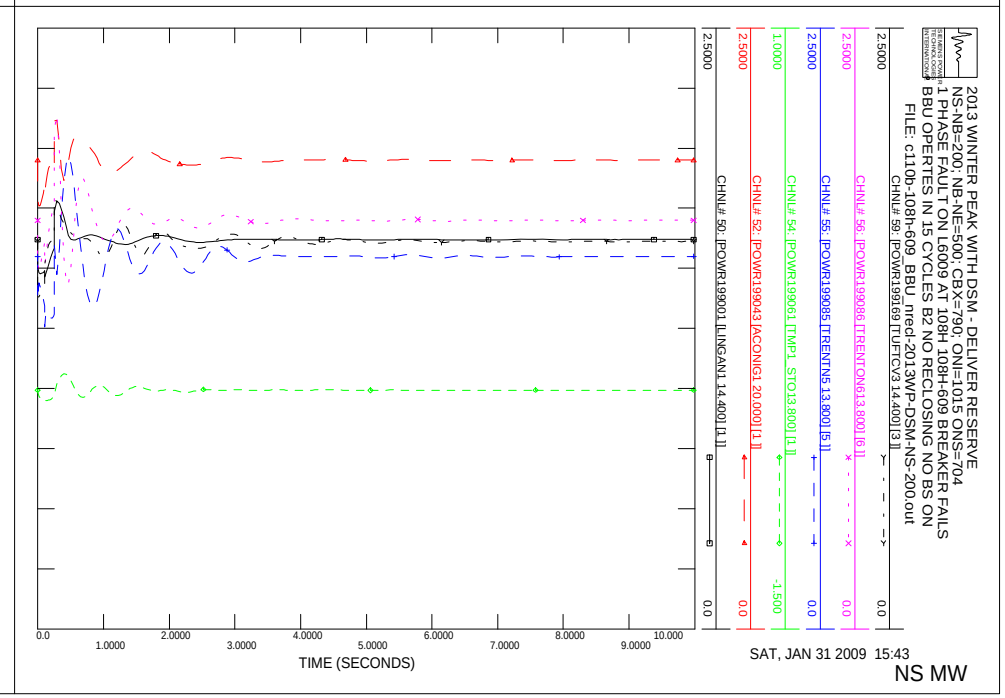
2013 WINTER PEAK WITH DSM - DELIVER RESERVE
NS-NB=200; NB-NE=500; CBX=790; ONI=1015 ONS=704
1 PHASE FAULT ON L6009 AT 108H 108H-609 BREAKER FAILS
BBU OPERTES IN 15 CYCLES B2 NO RECLOSING NO BS ON
FILE: c110b-108h-609_BBU_nrecl-2013WP-DSM-NS-200.out
CHNL# 59: [POWR199169 [TUFTCV3 14.400] [3]]
CHNL# 56: [POWR199086 [TRENTON613.800] [6]]
CHNL# 55: [POWR199085 [TRENTN5 13.800] [5]]
CHNL# 54: [POWR199061 [TMP1 STO13.800] [1]]
CHNL# 52: [POWR199043 [ACONIG1 20.000] [1]]
CHNL# 50: [POWR199001 [LINGAN1 14.400] [1]]
2.5000
0.0
2.5000
0.0
2.5000
0.0
1.0000
-1.500
2.5000
0.0
2.5000
0.0
0.0
1.0000
2.0000
3.0000
4.0000
5.0000
6.0000
7.0000
8.0000
9.0000
10.000
TIME (SECONDS)
SAT, JAN 31 2009 15:43
NS MW

2013 WINTER PEAK WITH DSM - DELIVER RESERVE
NS-NB=200; NB-NE=500; CBX=790; ONI=1015 ONS=704
1 PHASE FAULT ON L6009 AT 108H 108H-609 BREAKER FAILS
BBU OPERTES IN 15 CYCLES B2 NO RECLOSING NO BS ON
FILE: c110b-108h-609_BBU_nrecl-2013WP-DSM-NS-200.out
CHNL# 119: [VARS IR141-DIGBY]
CHNL# 118: [VARS IR137-STATIA]
CHNL# 117: [VARS IR114-GLENDHU]
CHNL# 116: [VARS IR84-DALHOUSIE]
CHNL# 115: [VARS IR82_NUTTBY]
CHNL# 114: [VARS IR45_AMHERST]
TIME (SECONDS)
SAT, JAN 31 2009 15:43
NS WIND MV

2013 WINTER PEAK WITH DSM - DELIVER RESERVE
NS-NB=200; NB-NE=500; CBX=790; ONI=1015 ONS=704
1 PHASE FAULT ON L6009 AT 108H 108H-609 BREAKER FAILS
BBU OPERTES IN 15 CYCLES B2 NO RECLOSING NO BS ON
FILE: c110b-108h-609_BBU_nrecl-2013WP-DSM-NS-200.out
CHNL# 79: [POWER IR141-DIGBY]
CHNL# 78: [POWER IR137-STATIA]
CHNL# 77: [POWER IR114-GLENDHU]
CHNL# 76: [POWER IR84-DALHOUSIE]
CHNL# 75: [POWER IR82_NUTTBY]
CHNL# 74: [POWER IR45_AMHERST]
TIME (SECONDS)
SAT, JAN 31 2009 15:43
NS WIND MW

2013 WINTER PEAK WITH DSM - DELIVER RESERVE
NS-NB=200; NB-NE=500; CBX=790; ONI=1015 ONS=704
1 PHASE FAULT ON L6009 AT 108H 108H-609 BREAKER FAILS
BBU OPERTES IN 15 CYCLES B2 NO RECLOSING NO BS ON
FILE: c110b-108h-609_BBU_nrecl-2013WP-DSM-NS-200.out
CHNL# 133: [VOLT199125 [ONSLOW 345.00]]
CHNL# 132: [VOLT199120 [HOPEWELL 345.00]]
CHNL# 131: [VOLT199045 [WOODBINE345.00]]
CHNL# 130: [VOLT190320 [SALBRY 345.00]]
CHNL# 128: [VOLT190004 [KESWICK 345.00]]
CHNL# 127: [VOLT 70002 [ORRINGTN345.00]]
TIME (SECONDS)
SAT, JAN 31 2009 15:43
"345KV VOLTAGE"

2013 WINTER PEAK WITH DSM - DELIVER RESERVE
NS-NB=200; NB-NE=500; CBX=790; ONI=1015 ONS=704
1 PHASE FAULT ON L6009 AT 108H 108H-609 BREAKER FAILS
BBU OPERTES IN 15 CYCLES B2 NO RECLOSING NO BS ON
FILE: c110b-108h-609_BBU_nrecl-2013WP-DSM-NS-200.out
CHNL# 125: 60*(1+[FREQ199125 [ONSLOW 345.00]])
CHNL# 124: 60*(1+[FREQ199120 [HOPEWELL 345.00]])
CHNL# 123: 60*(1+[FREQ199045 [WOODBINE345.00]])
CHNL# 122: 60*(1+[FREQ190320 [SALBRY 345.00]])
CHNL# 121: 60*(1+[FREQ190197 [C.COVE 345.00]])
CHNL# 120: 60*(1+[FREQ 70002 [ORRINGTN345.00]])
TIME (SECONDS)
SAT, JAN 31 2009 15:43
FREQUENCY HZ

2013 WINTER PEAK WITH DSM - DELIVER RESERVE
NS-NB=200; NB-NE=500; CBX=790; ONI=1015 ONS=704
1 PHASE FAULT ON L6009 AT 108H 108H-609 BREAKER FAILS
BBU OPERTES IN 15 CYCLES B2 NO RECLOSING NO BS ON
FILE: c110b-108h-609_BBU_nrecl-2013WP-DSM-NS-200.out
CHNL# 146: [VOLT199280 [TUSKET A138.00]]
CHNL# 145: [VOLT199193 [HHWAS 138.00]]
CHNL# 144: [VOLT199165 [TUFTCOVE138.00]]
CHNL# 143: [VOLT199138: [SPRNGHILL138.00]]
CHNL# 142: [VOLT199090 [SON-TREN138.00]]
CHNL# 141: [VOLT199051 [HASTINGS138.00]]
1.2000
0.70000
0.0
1.0000
2.0000
3.0000
4.0000
5.0000
6.0000
7.0000
8.0000
9.0000
10.000
TIME (SECONDS)
SAT, JAN 31 2009 15:43
138KV BUS VOLTS

2013 WINTER PEAK WITH DSM - DELIVER RESERVE
NS-NB=200; NB-NE=500; CBX=790; ONI=1015 ONS=704
1 PHASE FAULT ON L6009 AT 108H 108H-609 BREAKER FAILS
BBU OPERTES IN 15 CYCLES B2 NO RECLOSING NO BS ON
FILE: c110b-108h-609_BBU_nrecl-2013WP-DSM-NS-200.out
CHNL# 140: [VOLT199240 [BWATER A230.00]]
CHNL# 139: [VOLT199200 [BRUSHY 230.00]]
CHNL# 138: [VOLT199130 [ONSLOW 230.00]]
CHNL# 137: [VOLT199050 [HASTINGS230.00]]
CHNL# 136: [VOLT199044 [PT.ACONI230.00]]
CHNL# 135: [VOLT199000 [LINGAN 230.00]]
1.2000
0.70000
0.0
1.0000
2.0000
3.0000
4.0000
5.0000
6.0000
7.0000
8.0000
9.0000
10.000
TIME (SECONDS)
SAT, JAN 31 2009 15:43
230KV BUS VOLTS

2013 WINTER PEAK WITH DSM - DELIVER RESERVE
NS-NB=200; NB-NE=500; CBX=790; ONI=1015 ONS=704
1 PHASE FAULT ON L6009 AT 108H 108H-609 BREAKER FAILS
BBU OPERTES IN 15 CYCLES B2 NO RECLOSING NO BS ON
FILE: c110b-108h-609_BBU_nrecl-2013WP-DSM-NS-200.out
CHNL# 217: [L6513MW] 250.00
CHNL# 215: [L6503MW] 500.00
CHNL# 197: [L8003MW] 1000.0
CHNL# 195: [L8004MW] 1000.0
CHNL# 193: [L8001MW] 1000.0
CHNL# 221: [L3001MW] 1000.0
-250.0
0.0
-1000.
0.0
1.0000
2.0000
3.0000
4.0000
5.0000
6.0000
7.0000
8.0000
9.0000
10.000
TIME (SECONDS)
SAT, JAN 31 2009 15:43
LINE FLOW MW

2013 WINTER PEAK WITH DSM - DELIVER RESERVE
NS-NB=200; NB-NE=500; CBX=790; ONI=1015 ONS=704
1 PHASE FAULT ON L6009 AT 108H 108H-609 BREAKER FAILS
BBU OPERTES IN 15 CYCLES B2 NO RECLOSING NO BS ON
FILE: c110b-108h-609_BBU_nrecl-2013WP-DSM-NS-200.out
CHNL# 154: [IR141-DIGBYH69.0 VOLTS]
CHNL# 153: [IR137-STATIG25.0 VOLTS]
CHNL# 152: [IR114-GLENDH138.0 VOLTS]
CHNL# 151: [IR84-DALHOHV230.0 VOLTS]
CHNL# 150: [IR82 NUTBHV69.0 VOLTS]
CHNL# 149: [IR45 AMHERTP138.0 VOLTS]
1.2000
0.70000
0.0
1.0000
2.0000
3.0000
4.0000
5.0000
6.0000
7.0000
8.0000
9.0000
10.000
TIME (SECONDS)
SAT, JAN 31 2009 15:43
WIND BUS VOLTS

2013 WINTER PEAK WITH DSM - DELIVER RESERVE
NS-NB=200; NB-NE=500; CBX=790; ONI=1015 ONS=704
1 PHASE FAULT ON BUS TIE BREAKER 103H-600 AT LAKESIDE
CLEARS 103H 138KV BUS
FILE: e101-103H-600-1p_nrecl-2013WP-DSM-NS-200.out
CHNL# 20: [ANGL199169 [TUFTCV3 14.400] [3]] [ANGL156661 [DARL G1 22.000] [1
CHNL# 17: [ANGL199086 [TRENTON613.800] [6]] [ANGL156661 [DARL G1 22.000] [1
CHNL# 16: [ANGL199085 [TRENTN5 13.800] [5]] [ANGL156661 [DARL G1 22.000] [1
CHNL# 15: [ANGL199061 [TMP1 STO13.800] [1]] [ANGL156661 [DARL G1 22.000] [1
CHNL# 13: [ANGL199043 [ACONIG1 20.000] [1]] [ANGL156661 [DARL G1 22.000] [1
CHNL# 11: [ANGL199001 [LINGAN1 14.400] [1]] [ANGL156661 [DARL G1 22.000] [1
100.00
-100.0
0.0
1.0000
2.0000
3.0000
4.0000
5.0000
6.0000
7.0000
8.0000
9.0000
10.000
TIME (SECONDS)
SAT, JAN 31 2009 15:43
NS ANGLE

2013 WINTER PEAK WITH DSM - DELIVER RESERVE
NS-NB=200; NB-NE=500; CBX=790; ONI=1015 ONS=704
1 PHASE FAULT ON BUS TIE BREAKER 103H-600 AT LAKESIDE
CLEARS 103H 138KV BUS
FILE: e101-103H-600-1p_nrecl-2013WP-DSM-NS-200.out
CHNL# 10: [ANGL190472 [BLLDNG2 19.000] [1]] [ANGL156661 [DARL G1 22.000] [1
CHNL# 6: [ANGL190456 [LEPRG1 26.000] [1]] [ANGL156661 [DARL G1 22.000] [1
CHNL# 5: [ANGL190450 [MACTG1 13.800] [1]] [ANGL156661 [DARL G1 22.000] [1
CHNL# 3: [ANGL126652 [RAV 3 22.000] [1]] [ANGL156661 [DARL G1 22.000] [1
CHNL# 2: [ANGL101063 [MYST G7 22.000] [1]] [ANGL156661 [DARL G1 22.000] [1
CHNL# 1: [ANGL100060 [MIS GT1 18.000] [1]] [ANGL156661 [DARL G1 22.000] [1
100.00
-100.0
0.0
1.0000
2.0000
3.0000
4.0000
5.0000
6.0000
7.0000
8.0000
9.0000
10.000
TIME (SECONDS)
SAT, JAN 31 2009 15:43
"NE,NY,NB ANGLE"

2013 WINTER PEAK WITH DSM - DELIVER RESERVE
NS-NB=200; NB-NE=500; CBX=790; ONI=1015 ONS=704
1 PHASE FAULT ON BUS TIE BREAKER 103H-600 AT LAKESIDE
CLEARS 103H 138KV BUS
FILE: e101-103H-600-1p_nrecl-2013WP-DSM-NS-200.out
CHNL# 59: [POWR199169 [TUFTCV3 14.400] [3]]
CHNL# 56: [POWR199086 [TRENTON613.800] [6]]
CHNL# 55: [POWR199085 [TRENTN5 13.800] [5]]
CHNL# 54: [POWR199061 [TMP1 STO13.800] [1]]
CHNL# 52: [POWR199043 [ACONIG1 20.000] [1]]
CHNL# 50: [POWR199001 [LINGAN1 14.400] [1]]
2.5000
0.0
-1.500
1.0000
0.0
1.0000
2.0000
3.0000
4.0000
5.0000
6.0000
7.0000
8.0000
9.0000
10.000
TIME (SECONDS)
SAT, JAN 31 2009 15:43
NS MW

2013 WINTER PEAK WITH DSM - DELIVER RESERVE
NS-NB=200; NB-NE=500; CBX=790; ONI=1015 ONS=704
1 PHASE FAULT ON BUS TIE BREAKER 103H-600 AT LAKESIDE
CLEARS 103H 138KV BUS
FILE: e101-103H-600-1p_nrecl-2013WP-DSM-NS-200.out
CHNL# 49: [POWER190472 [BLLDNG2 19.000] [1]]
CHNL# 45: [POWER190456 [LEPRG1 26.000] [1]]
CHNL# 44: [POWER190450 [MACTG1 13.800] [1]]
CHNL# 42: [POWER126652 [RAV 3 22.000] [1]]
CHNL# 41: [POWER101063 [MYST G7 22.000] [1]]
CHNL# 40: [POWER100060 [MIS GT1 18.000] [1]]
5.0000
0.0
4.0000
0.0
1.0000
7.0000
2.0000
1.0000
2.0000
3.0000
4.0000
5.0000
6.0000
7.0000
8.0000
9.0000
10.000
TIME (SECONDS)
SAT, JAN 31 2009 15:43
"NE,NY,NB POWER"

2013 WINTER PEAK WITH DSM - DELIVER RESERVE
NS-NB=200; NB-NE=500; CBX=790; ONI=1015 ONS=704
1 PHASE FAULT ON BUS TIE BREAKER 103H-600 AT LAKESIDE
CLEARS 103H 138KV BUS
FILE: e101-103H-600-1p_nrecl-2013WP-DSM-NS-200.out
CHNL# 114: [VARS IR45_AMHERST]
CHNL# 115: [VARS IR82_NUTTBY]
CHNL# 116: [VARS IR84-DALHOUSIE]
CHNL# 117: [VARS IR114-GLENDHU]
CHNL# 118: [VARS IR137-STATIA]
CHNL# 119: [VARS IR141-DIGBY]
0.50000
-0.5000
0.0
1.0000
2.0000
3.0000
4.0000
5.0000
6.0000
7.0000
8.0000
9.0000
10.000
TIME (SECONDS)
SAT, JAN 31 2009 15:43
NS WIND MV

2013 WINTER PEAK WITH DSM - DELIVER RESERVE
NS-NB=200; NB-NE=500; CBX=790; ONI=1015 ONS=704
1 PHASE FAULT ON BUS TIE BREAKER 103H-600 AT LAKESIDE
CLEARS 103H 138KV BUS
FILE: e101-103H-600-1p_nrecl-2013WP-DSM-NS-200.out
CHNL# 74: [POWER IR45_AMHERST]
CHNL# 75: [POWER IR82_NUTTBY]
CHNL# 76: [POWER IR84-DALHOUSIE]
CHNL# 77: [POWER IR114-GLENDHU]
CHNL# 78: [POWER IR137-STATIA]
CHNL# 79: [POWER IR141-DIGBY]
1.0000
0.0
0.0
1.0000
2.0000
3.0000
4.0000
5.0000
6.0000
7.0000
8.0000
9.0000
10.000
TIME (SECONDS)
SAT, JAN 31 2009 15:43
NS WIND MW

2013 WINTER PEAK WITH DSM - DELIVER RESERVE
NS-NB=200; NB-NE=500; CBX=790; ONI=1015 ONS=704
1 PHASE FAULT ON BUS TIE BREAKER 103H-600 AT LAKESIDE
CLEARS 103H 138KV BUS
FILE: e101-103H-600-1p_nrecl-2013WP-DSM-NS-200.out
CHNL# 127: [VOLT 70002 [ORRINGTN345.00]]
CHNL# 128: [VOLT190004 [KESWICK 345.00]]
CHNL# 130: [VOLT190320 [SALBRY 345.00]]
CHNL# 131: [VOLT199045 [WOODBINE345.00]]
CHNL# 132: [VOLT199120 [HOPEWELL345.00]]
CHNL# 133: [VOLT199125 [ONSLOW 345.00]]
1.1000
0.90000
1.0000
2.0000
3.0000
4.0000
5.0000
6.0000
7.0000
8.0000
9.0000
10.000
TIME (SECONDS)
SAT, JAN 31 2009 15:43
"345KV VOLTAGE"

2013 WINTER PEAK WITH DSM - DELIVER RESERVE
NS-NB=200; NB-NE=500; CBX=790; ONI=1015 ONS=704
1 PHASE FAULT ON BUS TIE BREAKER 103H-600 AT LAKESIDE
CLEARS 103H 138KV BUS
FILE: e101-103H-600-1p_nrecl-2013WP-DSM-NS-200.out
CHNL# 120: 60*(1+[FREQ 70002 [ORRINGTN345.00]])
CHNL# 121: 60*(1+[FREQ190197 [C.COVE 345.00]])
CHNL# 122: 60*(1+[FREQ190320 [SALBRY 345.00]])
CHNL# 123: 60*(1+[FREQ199045 [WOODBINE345.00]])
CHNL# 124: 60*(1+[FREQ199120 [HOPEWELL345.00]])
CHNL# 125: 60*(1+[FREQ199125 [ONSLOW 345.00]])
60.500
59.500
1.0000
2.0000
3.0000
4.0000
5.0000
6.0000
7.0000
8.0000
9.0000
10.000
TIME (SECONDS)
SAT, JAN 31 2009 15:43
FREQUENCY HZ

2013 WINTER PEAK WITH DSM - DELIVER RESERVE
NS-NB=200; NB-NE=500; CBX=790; ONI=1015 ONS=704
1 PHASE FAULT ON BUS TIE BREAKER 103H-600 AT LAKESIDE
CLEARS 103H 138KV BUS
FILE: e101-103H-600-1p_nrecl-2013WP-DSM-NS-200.out
CHNL# 146: [VOLT199280 [TUSKET A138.00]]
CHNL# 145: [VOLT199193 [HHWAS 138.00]]
CHNL# 144: [VOLT199165 [TUFTCOVE138.00]]
CHNL# 143: [VOLT199135 [SPRNGHILL138.00]]
CHNL# 142: [VOLT199090 [SON-TREN138.00]]
CHNL# 141: [VOLT199051 [HASTINGS138.00]]
1.2000
0.70000
0.0
1.0000
2.0000
3.0000
4.0000
5.0000
6.0000
7.0000
8.0000
9.0000
10.000
TIME (SECONDS)
SAT, JAN 31 2009 15:43
138KV BUS VOLTS

2013 WINTER PEAK WITH DSM - DELIVER RESERVE
NS-NB=200; NB-NE=500; CBX=790; ONI=1015 ONS=704
1 PHASE FAULT ON BUS TIE BREAKER 103H-600 AT LAKESIDE
CLEARS 103H 138KV BUS
FILE: e101-103H-600-1p_nrecl-2013WP-DSM-NS-200.out
CHNL# 140: [VOLT199240 [BWATER A230.00]]
CHNL# 139: [VOLT199200 [BRUSHY 230.00]]
CHNL# 138: [VOLT199130 [ONSLOW 230.00]]
CHNL# 137: [VOLT199050 [HASTINGS230.00]]
CHNL# 136: [VOLT199044 [PT.ACONI230.00]]
CHNL# 135: [VOLT199000 [LINGAN 230.00]]
1.2000
0.70000
0.0
1.0000
2.0000
3.0000
4.0000
5.0000
6.0000
7.0000
8.0000
9.0000
10.000
TIME (SECONDS)
SAT, JAN 31 2009 15:43
230KV BUS VOLTS

2013 WINTER PEAK WITH DSM - DELIVER RESERVE
NS-NB=200; NB-NE=500; CBX=790; ONI=1015 ONS=704
1 PHASE FAULT ON BUS TIE BREAKER 103H-600 AT LAKESIDE
CLEARS 103H 138KV BUS
FILE: e101-103H-600-1p_nrecl-2013WP-DSM-NS-200.out
CHNL# 217: [L6533MW]
CHNL# 215: [L6503MW]
CHNL# 197: [L8003MW]
CHNL# 195: [L8004MW]
CHNL# 193: [L8001MW]
CHNL# 221: [L3001MW]
250.00
500.00
1000.0
0.0
-250.0
-1000.
0.0
1.0000
2.0000
3.0000
4.0000
5.0000
6.0000
7.0000
8.0000
9.0000
10.000
TIME (SECONDS)
SAT, JAN 31 2009 15:43
LINE FLOW MW

2013 WINTER PEAK WITH DSM - DELIVER RESERVE
NS-NB=200; NB-NE=500; CBX=790; ONI=1015 ONS=704
1 PHASE FAULT ON BUS TIE BREAKER 103H-600 AT LAKESIDE
CLEARS 103H 138KV BUS
FILE: e101-103H-600-1p_nrecl-2013WP-DSM-NS-200.out
CHNL# 154: [IR141-DIGBYH69.0 VOLTS]
CHNL# 153: [IR137-STATIG25.0 VOLTS]
CHNL# 152: [IR114-GLENDH138.0 VOLTS]
CHNL# 151: [IR84-DALHOHV230.0 VOLTS]
CHNL# 150: [IR82-NUTBHV69.0 VOLTS]
CHNL# 149: [IR45-AMHERTP138.0 VOLTS]
1.2000
0.70000
0.0
1.0000
2.0000
3.0000
4.0000
5.0000
6.0000
7.0000
8.0000
9.0000
10.000
TIME (SECONDS)
SAT, JAN 31 2009 15:43
WIND BUS VOLTS

2013 WINTER PEAK WITH DSM - DELIVER RESERVE
NS-NB=200; NB-NE=500; CBX=790; ONI=1015 ONS=704
1 PHASE FAULT ON BREAKER 47C-602 AT STORA
CLEARS 2 TMP
FILE: e102-47C-602-1p_nrecl-2013WP-DSM-NS-200.out
CHNL# 20: [ANGL199169 [TUFTCV3 14.400] [3]] [ANGL156661 [DARL G1 22.000] [1
CHNL# 17: [ANGL199086 [TRENTON613.800] [6]] [ANGL156661 [DARL G1 22.000] [1
CHNL# 16: [ANGL199085 [TRENTN5 13.800] [5]] [ANGL156661 [DARL G1 22.000] [1
CHNL# 15: [ANGL199061 [TMP1 STO13.800] [1]] [ANGL156661 [DARL G1 22.000] [1
CHNL# 13: [ANGL199043 [ACONIG1 20.000] [1]] [ANGL156661 [DARL G1 22.000] [1
CHNL# 11: [ANGL199001 [LINGAN1 14.400] [1]] [ANGL156661 [DARL G1 22.000] [1
100.00
-100.0
0.0
1.0000
2.0000
3.0000
4.0000
5.0000
6.0000
7.0000
8.0000
9.0000
10.000
TIME (SECONDS)
SAT, JAN 31 2009 15:43
NS ANGLE

2013 WINTER PEAK WITH DSM - DELIVER RESERVE
NS-NB=200; NB-NE=500; CBX=790; ONI=1015 ONS=704
1 PHASE FAULT ON BREAKER 47C-602 AT STORA
CLEARS 2 TMP
FILE: e102-47C-602-1p_nrecl-2013WP-DSM-NS-200.out
CHNL# 10: [ANGL190472 [BLLDNG2 19.000] [1]] [ANGL156661 [DARL G1 22.000] [1
CHNL# 6: [ANGL190456 [LEPRG1 26.000] [1]] [ANGL156661 [DARL G1 22.000] [1
CHNL# 5: [ANGL190450 [MACTG1 13.800] [1]] [ANGL156661 [DARL G1 22.000] [1
CHNL# 3: [ANGL126652 [RAV 3 22.000] [1]] [ANGL156661 [DARL G1 22.000] [1
CHNL# 2: [ANGL101063 [MYST G7 22.000] [1]] [ANGL156661 [DARL G1 22.000] [1
CHNL# 1: [ANGL100060 [MIS GT1 18.000] [1]] [ANGL156661 [DARL G1 22.000] [1
100.00
-100.0
0.0
1.0000
2.0000
3.0000
4.0000
5.0000
6.0000
7.0000
8.0000
9.0000
10.000
TIME (SECONDS)
SAT, JAN 31 2009 15:43
"NE,NY,NB ANGLE"

2013 WINTER PEAK WITH DSM - DELIVER RESERVE
NS-NB=200; NB-NE=500; CBX=790; ONI=1015 ONS=704
1 PHASE FAULT ON BREAKER 47C-602 AT STORA
CLEARS 2 TMP
FILE: e102-47C-602-1p_nrecl-2013WP-DSM-NS-200.out
CHNL# 59: [POWR199169 [TUFTCV3 14.400] [3]]
CHNL# 56: [POWR199086 [TRENTON613.800] [6]]
CHNL# 55: [POWR199085 [TRENTN5 13.800] [5]]
CHNL# 54: [POWR199061 [TMP1 STO13.800] [1]]
CHNL# 52: [POWR199043 [ACONIG1 20.000] [1]]
CHNL# 50: [POWR199001 [LINGAN1 14.400] [1]]
2.5000
0.0
-1.500
1.0000
2.0000
3.0000
4.0000
5.0000
6.0000
7.0000
8.0000
9.0000
10.000
TIME (SECONDS)
SAT, JAN 31 2009 15:43
NS MW

2013 WINTER PEAK WITH DSM - DELIVER RESERVE
NS-NB=200; NB-NE=500; CBX=790; ONI=1015 ONS=704
1 PHASE FAULT ON BREAKER 47C-602 AT STORA
CLEARS 2 TMP
FILE: e102-47C-602-1p_nrecl-2013WP-DSM-NS-200.out
CHNL# 49: [POWER190472 [BLLDNG2 19.000] [1]]
CHNL# 45: [POWER190456 [LEPRG1 26.000] [1]]
CHNL# 44: [POWER190450 [MACTG1 13.800] [1]]
CHNL# 42: [POWER126652 [RAV 3 22.000] [1]]
CHNL# 41: [POWER101063 [MYST G7 22.000] [1]]
CHNL# 40: [POWER100060 [MIS GT1 18.000] [1]]
5.0000
0.0
4.0000
1.0000
2.0000
3.0000
4.0000
5.0000
6.0000
7.0000
8.0000
9.0000
10.000
TIME (SECONDS)
SAT, JAN 31 2009 15:43
"NE,NY,NB POWER"

2013 WINTER PEAK WITH DSM - DELIVER RESERVE
NS-NB=200; NB-NE=500; CBX=790; ONI=1015 ONS=704
1 PHASE FAULT ON BREAKER 47C-602 AT STORA
CLEARS 2 TMP
FILE: e102-47C-602-1p_nrecl-2013WP-DSM-NS-200.out
CHNL# 119: [VARS IR141-DIGBY] 0.50000 -0.5000
CHNL# 118: [VARS IR137-STATIA] 0.50000 -0.5000
CHNL# 117: [VARS IR114-GLENDHU] 0.50000 -0.5000
CHNL# 116: [VARS IR84-DALHOUSIE] 0.50000 -0.5000
CHNL# 115: [VARS IR82_NUTTBY] 0.50000 -0.5000
CHNL# 114: [VARS IR45_AMHERST] 0.50000 -0.5000
TIME (SECONDS)
SAT, JAN 31 2009 15:43
NS WIND MV

2013 WINTER PEAK WITH DSM - DELIVER RESERVE
NS-NB=200; NB-NE=500; CBX=790; ONI=1015 ONS=704
1 PHASE FAULT ON BREAKER 47C-602 AT STORA
CLEARS 2 TMP
FILE: e102-47C-602-1p_nrecl-2013WP-DSM-NS-200.out
CHNL# 79: [POWER IR141-DIGBY] 1.0000 0.0
CHNL# 78: [POWER IR137-STATIA] 1.0000 0.0
CHNL# 77: [POWER IR114-GLENDHU] 1.0000 0.0
CHNL# 76: [POWER IR84-DALHOUSIE] 1.0000 0.0
CHNL# 75: [POWER IR82_NUTTBY] 1.0000 0.0
CHNL# 74: [POWER IR45_AMHERST] 1.0000 0.0
TIME (SECONDS)
SAT, JAN 31 2009 15:43
NS WIND MW

2013 WINTER PEAK WITH DSM - DELIVER RESERVE
NS-NB=200; NB-NE=500; CBX=790; ONI=1015 ONS=704
1 PHASE FAULT ON BREAKER 47C-602 AT STORA
CLEARS 2 TMP
FILE: e102-47C-602-1p_nrecl-2013WP-DSM-NS-200.out
CHNL# 133: [VOLT199125 [ONSLOW 345.00]] 1.1000 0.90000
CHNL# 132: [VOLT199120 [HOPEWELL 345.00]] 1.1000 0.90000
CHNL# 131: [VOLT199045 [WOODBINE345.00]] 1.1000 0.90000
CHNL# 130: [VOLT190320 [SALBRY 345.00]] 1.1000 0.90000
CHNL# 128: [VOLT190004 [KESWICK 345.00]] 1.1000 0.90000
CHNL# 127: [VOLT 70002 [ORRINGTN345.00]] 1.1000 0.90000
TIME (SECONDS)
SAT, JAN 31 2009 15:43
"345KV VOLTAGE"

2013 WINTER PEAK WITH DSM - DELIVER RESERVE
NS-NB=200; NB-NE=500; CBX=790; ONI=1015 ONS=704
1 PHASE FAULT ON BREAKER 47C-602 AT STORA
CLEARS 2 TMP
FILE: e102-47C-602-1p_nrecl-2013WP-DSM-NS-200.out
CHNL# 125: 60*(1+[FREQ199125 [ONSLOW 345.00]]) 60.500 59.500
CHNL# 124: 60*(1+[FREQ199120 [HOPEWELL 345.00]]) 60.500 59.500
CHNL# 123: 60*(1+[FREQ199045 [WOODBINE345.00]]) 60.500 59.500
CHNL# 122: 60*(1+[FREQ190320 [SALBRY 345.00]]) 60.500 59.500
CHNL# 121: 60*(1+[FREQ190197 [C.COVE 345.00]]) 60.500 59.500
CHNL# 120: 60*(1+[FREQ 70002 [ORRINGTN345.00]]) 60.500 59.500
TIME (SECONDS)
SAT, JAN 31 2009 15:43
FREQUENCY HZ

2013 WINTER PEAK WITH DSM - DELIVER RESERVE
NS-NB=200; NB-NE=500; CBX=790; ONI=1015 ONS=704
1 PHASE FAULT ON BREAKER 47C-602 AT STORA
CLEARS 2 TMP
FILE: e102-47C-602-1p_nrecl-2013WP-DSM-NS-200.out
CHNL# 146: [VOLT199280 [TUSKET A138.00]]
CHNL# 145: [VOLT199193 [HHWAS 138.00]]
CHNL# 144: [VOLT199165 [TUFTCOVE138.00]]
CHNL# 143: [VOLT199135 [SPRNGHILL138.00]]
CHNL# 142: [VOLT199090 [SON-TREN138.00]]
CHNL# 141: [VOLT199051 [HASTINGS138.00]]
1.2000
0.70000
0.0
1.0000
2.0000
3.0000
4.0000
5.0000
6.0000
7.0000
8.0000
9.0000
10.000
TIME (SECONDS)
SAT, JAN 31 2009 15:43
138KV BUS VOLTS

2013 WINTER PEAK WITH DSM - DELIVER RESERVE
NS-NB=200; NB-NE=500; CBX=790; ONI=1015 ONS=704
1 PHASE FAULT ON BREAKER 47C-602 AT STORA
CLEARS 2 TMP
FILE: e102-47C-602-1p_nrecl-2013WP-DSM-NS-200.out
CHNL# 140: [VOLT199240 [BWATER A230.00]]
CHNL# 139: [VOLT199200 [BRUSHY 230.00]]
CHNL# 138: [VOLT199130 [ONSLOW 230.00]]
CHNL# 137: [VOLT199050 [HASTINGS230.00]]
CHNL# 136: [VOLT199044 [PT.ACONI230.00]]
CHNL# 135: [VOLT199000 [LINGAN 230.00]]
1.2000
0.70000
0.0
1.0000
2.0000
3.0000
4.0000
5.0000
6.0000
7.0000
8.0000
9.0000
10.000
TIME (SECONDS)
SAT, JAN 31 2009 15:43
230KV BUS VOLTS

2013 WINTER PEAK WITH DSM - DELIVER RESERVE
NS-NB=200; NB-NE=500; CBX=790; ONI=1015 ONS=704
1 PHASE FAULT ON BREAKER 47C-602 AT STORA
CLEARS 2 TMP
FILE: e102-47C-602-1p_nrecl-2013WP-DSM-NS-200.out
CHNL# 217: [L6533NMW]
CHNL# 215: [L6503MW]
CHNL# 197: [L8003MW]
CHNL# 195: [L8004MW]
CHNL# 193: [L8001MW]
CHNL# 221: [L3001MW]
250.00
-250.0
500.00
0.0
1000.0
-1000.
0.0
1.0000
2.0000
3.0000
4.0000
5.0000
6.0000
7.0000
8.0000
9.0000
10.000
TIME (SECONDS)
SAT, JAN 31 2009 15:43
LINE FLOW MW

2013 WINTER PEAK WITH DSM - DELIVER RESERVE
NS-NB=200; NB-NE=500; CBX=790; ONI=1015 ONS=704
1 PHASE FAULT ON BREAKER 47C-602 AT STORA
CLEARS 2 TMP
FILE: e102-47C-602-1p_nrecl-2013WP-DSM-NS-200.out
CHNL# 154: [IR141-DIGBYH69.0 VOLTS]
CHNL# 153: [IR137-STATIG25.0 VOLTS]
CHNL# 152: [IR114-GLENDH138.0 VOLTS]
CHNL# 151: [IR84-DALHOHV230.0 VOLTS]
CHNL# 150: [IR82 NUTBHV69.0 VOLTS]
CHNL# 149: [IR45 AMHERTP138.0 VOLTS]
1.2000
0.70000
0.0
1.0000
2.0000
3.0000
4.0000
5.0000
6.0000
7.0000
8.0000
9.0000
10.000
TIME (SECONDS)
SAT, JAN 31 2009 15:43
WIND BUS VOLTS

2013 WINTER PEAK WITH DSM - DELIVER RESERVE
NS-NB=200; NB-NE=500; CBX=790; ONI=1015 ONS=704
1 PHASE FAULT ON BREAKER 91H-523 AT TUFT'S COVE 69KV
CLEARS 5041 AND T11 ALL TC ON
FILE: e103a-91H-523-1p_nrecl-2013WP-DSM-NS-200.out
CHNL# 20: [ANGL199169 [TUFTCV3 14.400] [3]] [ANGL156661 [DARL G1 22.000] [1
CHNL# 17: [ANGL199086 [TRENTON613.800] [6]] [ANGL156661 [DARL G1 22.000] [1
CHNL# 16: [ANGL199085 [TRENTN5 13.800] [5]] [ANGL156661 [DARL G1 22.000] [1
CHNL# 15: [ANGL199061 [TMP1 STO13.800] [1]] [ANGL156661 [DARL G1 22.000] [1
CHNL# 13: [ANGL199043 [ACONIG1 20.000] [1]] [ANGL156661 [DARL G1 22.000] [1
CHNL# 11: [ANGL199001 [LINGAN1 14.400] [1]] [ANGL156661 [DARL G1 22.000] [1
100.00
-100.0
0.0
1.0000
2.0000
3.0000
4.0000
5.0000
6.0000
7.0000
8.0000
9.0000
10.000
TIME (SECONDS)
SAT, JAN 31 2009 15:43
NS ANGLE

2013 WINTER PEAK WITH DSM - DELIVER RESERVE
NS-NB=200; NB-NE=500; CBX=790; ONI=1015 ONS=704
1 PHASE FAULT ON BREAKER 91H-523 AT TUFT'S COVE 69KV
CLEARS 5041 AND T11 ALL TC ON
FILE: e103a-91H-523-1p_nrecl-2013WP-DSM-NS-200.out
CHNL# 10: [ANGL190472 [BLLDNG2 19.000] [1]] [ANGL156661 [DARL G1 22.000] [1
CHNL# 6: [ANGL190456 [LEPRG1 26.000] [1]] [ANGL156661 [DARL G1 22.000] [1
CHNL# 5: [ANGL190450 [MACTG1 13.800] [1]] [ANGL156661 [DARL G1 22.000] [1
CHNL# 3: [ANGL126652 [RAV 3 22.000] [1]] [ANGL156661 [DARL G1 22.000] [1
CHNL# 2: [ANGL101063 [MYST G7 22.000] [1]] [ANGL156661 [DARL G1 22.000] [1
CHNL# 1: [ANGL100060 [MIS GT1 18.000] [1]] [ANGL156661 [DARL G1 22.000] [1
100.00
-100.0
0.0
1.0000
2.0000
3.0000
4.0000
5.0000
6.0000
7.0000
8.0000
9.0000
10.000
TIME (SECONDS)
SAT, JAN 31 2009 15:43
"NE,NY,NB ANGLE"

2013 WINTER PEAK WITH DSM - DELIVER RESERVE
NS-NB=200; NB-NE=500; CBX=790; ONI=1015 ONS=704
1 PHASE FAULT ON BREAKER 91H-523 AT TUFT'S COVE 69KV
CLEARS 5041 AND T11 ALL TC ON
FILE: e103a-91H-523-1p_nrecl-2013WP-DSM-NS-200.out
CHNL# 59: [POWR199169 [TUFTCV3 14.400] [3]]
CHNL# 56: [POWR199086 [TRENTON613.800] [6]]
CHNL# 55: [POWR199085 [TRENTN5 13.800] [5]]
CHNL# 54: [POWR199061 [TMP1 STO13.800] [1]]
CHNL# 52: [POWR199043 [ACONIG1 20.000] [1]]
CHNL# 50: [POWR199001 [LINGAN1 14.400] [1]]
2.5000
0.0
-1.500
1.0000
2.0000
3.0000
4.0000
5.0000
6.0000
7.0000
8.0000
9.0000
10.000
TIME (SECONDS)
SAT, JAN 31 2009 15:43
NS MW

2013 WINTER PEAK WITH DSM - DELIVER RESERVE
NS-NB=200; NB-NE=500; CBX=790; ONI=1015 ONS=704
1 PHASE FAULT ON BREAKER 91H-523 AT TUFT'S COVE 69KV
CLEARS 5041 AND T11 ALL TC ON
FILE: e103a-91H-523-1p_nrecl-2013WP-DSM-NS-200.out
CHNL# 49: [POWER190472 [BLLDNG2 19.000] [1]]
CHNL# 45: [POWER190456 [LEPRG1 26.000] [1]]
CHNL# 44: [POWER190450 [MACTG1 13.800] [1]]
CHNL# 42: [POWER126652 [RAV 3 22.000] [1]]
CHNL# 41: [POWER101063 [MYST G7 22.000] [1]]
CHNL# 40: [POWER100060 [MIS GT1 18.000] [1]]
5.0000
0.0
4.0000
1.0000
2.0000
3.0000
4.0000
5.0000
6.0000
7.0000
8.0000
9.0000
10.000
TIME (SECONDS)
SAT, JAN 31 2009 15:43
"NE,NY,NB POWER"

2013 WINTER PEAK WITH DSM - DELIVER RESERVE
NS-NB=200; NB-NE=500; CBX=790; ONI=1015 ONS=704
1 PHASE FAULT ON BREAKER 91H-523 AT TUFT'S COVE 69KV
CLEARS 5041 AND T11 ALL TC ON
FILE: e103a-91H-523-1p_nrecl-2013WP-DSM-NS-200.out
CHNL# 119: [VARS IR141-DIGBY]
CHNL# 118: [VARS IR137-STATIA]
CHNL# 117: [VARS IR114-GLENDHU]
CHNL# 116: [VARS IR84-DALHOUSIE]
CHNL# 115: [VARS IR82_NUTTBY]
CHNL# 114: [VARS IR45_AMHERST]
TIME (SECONDS)
SAT, JAN 31 2009 15:43
NS WIND MV

2013 WINTER PEAK WITH DSM - DELIVER RESERVE
NS-NB=200; NB-NE=500; CBX=790; ONI=1015 ONS=704
1 PHASE FAULT ON BREAKER 91H-523 AT TUFT'S COVE 69KV
CLEARS 5041 AND T11 ALL TC ON
FILE: e103a-91H-523-1p_nrecl-2013WP-DSM-NS-200.out
CHNL# 79: [POWER IR141-DIGBY]
CHNL# 78: [POWER IR137-STATIA]
CHNL# 77: [POWER IR114-GLENDHU]
CHNL# 76: [POWER IR84-DALHOUSIE]
CHNL# 75: [POWER IR82_NUTTBY]
CHNL# 74: [POWER IR45_AMHERST]
TIME (SECONDS)
SAT, JAN 31 2009 15:43
NS WIND MW

2013 WINTER PEAK WITH DSM - DELIVER RESERVE
NS-NB=200; NB-NE=500; CBX=790; ONI=1015 ONS=704
1 PHASE FAULT ON BREAKER 91H-523 AT TUFT'S COVE 69KV
CLEARS 5041 AND T11 ALL TC ON
FILE: e103a-91H-523-1p_nrecl-2013WP-DSM-NS-200.out
CHNL# 133: [VOLT199125 [ONSLOW 345.00]]
CHNL# 132: [VOLT199120 [HOPEWELL 345.00]]
CHNL# 131: [VOLT199045 [WOODBINE345.00]]
CHNL# 130: [VOLT190320 [SALBRY 345.00]]
CHNL# 128: [VOLT190004 [KESWICK 345.00]]
CHNL# 127: [VOLT 70002 [ORRINGTN345.00]]
TIME (SECONDS)
SAT, JAN 31 2009 15:43
"345KV VOLTAGE"

2013 WINTER PEAK WITH DSM - DELIVER RESERVE
NS-NB=200; NB-NE=500; CBX=790; ONI=1015 ONS=704
1 PHASE FAULT ON BREAKER 91H-523 AT TUFT'S COVE 69KV
CLEARS 5041 AND T11 ALL TC ON
FILE: e103a-91H-523-1p_nrecl-2013WP-DSM-NS-200.out
CHNL# 125: 60*(1+[FREQ199125 [ONSLOW 345.00]])
CHNL# 124: 60*(1+[FREQ199120 [HOPEWELL 345.00]])
CHNL# 123: 60*(1+[FREQ199045 [WOODBINE345.00]])
CHNL# 122: 60*(1+[FREQ190320 [SALBRY 345.00]])
CHNL# 121: 60*(1+[FREQ190197 [C.COVE 345.00]])
CHNL# 120: 60*(1+[FREQ 70002 [ORRINGTN345.00]])
TIME (SECONDS)
SAT, JAN 31 2009 15:43
FREQUENCY HZ

2013 WINTER PEAK WITH DSM - DELIVER RESERVE
NS-NB=200; NB-NE=500; CBX=790; ONI=1015 ONS=704
1 PHASE FAULT ON BREAKER 91H-523 AT TUFT'S COVE 69KV
CLEARS 5041 AND T11 ALL TC ON
FILE: e103a-91H-523-1p_nrecl-2013WP-DSM-NS-200.out
CHNL# 146: [VOLT199280 [TUSKET A138.00]]
CHNL# 145: [VOLT199193 [1H-WAS 138.00]]
CHNL# 144: [VOLT199165 [TUFT COVE138.00]]
CHNL# 143: [VOLT199138: [SPRNGHILL138.00]]
CHNL# 142: [VOLT199090 [50N-TREN138.00]]
CHNL# 141: [VOLT199051 [HASTINGS138.00]]
1.2000
0.70000
0.0
1.0000
2.0000
3.0000
4.0000
5.0000
6.0000
7.0000
8.0000
9.0000
10.000
TIME (SECONDS)
SAT, JAN 31 2009 15:43
138KV BUS VOLTS

2013 WINTER PEAK WITH DSM - DELIVER RESERVE
NS-NB=200; NB-NE=500; CBX=790; ONI=1015 ONS=704
1 PHASE FAULT ON BREAKER 91H-523 AT TUFT'S COVE 69KV
CLEARS 5041 AND T11 ALL TC ON
FILE: e103a-91H-523-1p_nrecl-2013WP-DSM-NS-200.out
CHNL# 140: [VOLT199240 [BWATER A230.00]]
CHNL# 139: [VOLT199200 [BRUSHY 230.00]]
CHNL# 138: [VOLT199130 [ONSLOW 230.00]]
CHNL# 137: [VOLT199050 [HASTINGS230.00]]
CHNL# 136: [VOLT199044 [PT.ACONI230.00]]
CHNL# 135: [VOLT199000 [LINGAN 230.00]]
1.2000
0.70000
0.0
1.0000
2.0000
3.0000
4.0000
5.0000
6.0000
7.0000
8.0000
9.0000
10.000
TIME (SECONDS)
SAT, JAN 31 2009 15:43
230KV BUS VOLTS

2013 WINTER PEAK WITH DSM - DELIVER RESERVE
NS-NB=200; NB-NE=500; CBX=790; ONI=1015 ONS=704
1 PHASE FAULT ON BREAKER 91H-523 AT TUFT'S COVE 69KV
CLEARS 5041 AND T11 ALL TC ON
FILE: e103a-91H-523-1p_nrecl-2013WP-DSM-NS-200.out
CHNL# 217: [L6533MW]
CHNL# 215: [L6503MW]
CHNL# 197: [L8003MW]
CHNL# 195: [L8004MW]
CHNL# 193: [L8001MW]
CHNL# 221: [L3001MW]
250.00
-250.0
500.00
0.0
1000.0
-1000.
TIME (SECONDS)
SAT, JAN 31 2009 15:43
LINE FLOW MW

2013 WINTER PEAK WITH DSM - DELIVER RESERVE
NS-NB=200; NB-NE=500; CBX=790; ONI=1015 ONS=704
1 PHASE FAULT ON BREAKER 91H-523 AT TUFT'S COVE 69KV
CLEARS 5041 AND T11 ALL TC ON
FILE: e103a-91H-523-1p_nrecl-2013WP-DSM-NS-200.out
CHNL# 154: [IR141-DIGBYH69.0 VOLTS]
CHNL# 153: [IR137-STATIG25.0 VOLTS]
CHNL# 152: [IR114-GLENDH138.0 VOLTS]
CHNL# 151: [IR84-DALHOHV230.0 VOLTS]
CHNL# 150: [IR82-NUTBHV69.0 VOLTS]
CHNL# 149: [IR45-AMHERTP138.0 VOLTS]
1.2000
0.70000
0.0
1.0000
2.0000
3.0000
4.0000
5.0000
6.0000
7.0000
8.0000
9.0000
10.000
TIME (SECONDS)
SAT, JAN 31 2009 15:43
WIND BUS VOLTS

2013 WINTER PEAK WITH DSM - DELIVER RESERVE
NS-NB=200; NB-NE=500; CBX=790; ONI=1015 ONS=704
1 PHASE FAULT ON BREAKER 91H-523 AT TUFT'S COVE 69KV
CLEARS 5041 AND T11 TC1 OFF
FILE: e103b-91H-523-1p_nrecl-2013WP-DSM-NS-200.out
CHNL# 20: [ANGL199169] [TUFTCV3 14.400] [3] [ANGL156661] [DARL G1 22.000] [1]
CHNL# 17: [ANGL199086] [TRENTON613.800] [6] [ANGL156661] [DARL G1 22.000] [1]
CHNL# 16: [ANGL199085] [TRENTN5 13.800] [5] [ANGL156661] [DARL G1 22.000] [1]
CHNL# 15: [ANGL199061] [TMP1 STO13.800] [1] [ANGL156661] [DARL G1 22.000] [1]
CHNL# 13: [ANGL199043] [ACONIG1 20.000] [1] [ANGL156661] [DARL G1 22.000] [1]
CHNL# 11: [ANGL199001] [LINGAN1 14.400] [1] [ANGL156661] [DARL G1 22.000] [1]
TIME (SECONDS)
SAT, JAN 31 2009 15:43
NS ANGLE

2013 WINTER PEAK WITH DSM - DELIVER RESERVE
NS-NB=200; NB-NE=500; CBX=790; ONI=1015 ONS=704
1 PHASE FAULT ON BREAKER 91H-523 AT TUFT'S COVE 69KV
CLEARS 5041 AND T11 TC1 OFF
FILE: e103b-91H-523-1p_nrecl-2013WP-DSM-NS-200.out
CHNL# 10: [ANGL190472] [BLLDNG2 19.000] [1] [ANGL156661] [DARL G1 22.000] [1]
CHNL# 6: [ANGL190456] [LEPRG1 26.000] [1] [ANGL156661] [DARL G1 22.000] [1]
CHNL# 5: [ANGL190450] [MACTG1 13.800] [1] [ANGL156661] [DARL G1 22.000] [1]
CHNL# 3: [ANGL126652] [RAV 3 22.000] [1] [ANGL156661] [DARL G1 22.000] [1]
CHNL# 2: [ANGL101063] [MYST G7 22.000] [1] [ANGL156661] [DARL G1 22.000] [1]
CHNL# 1: [ANGL100060] [MIS GT1 18.000] [1] [ANGL156661] [DARL G1 22.000] [1]
TIME (SECONDS)
SAT, JAN 31 2009 15:43
"NE,NY,NB ANGLE"

2013 WINTER PEAK WITH DSM - DELIVER RESERVE
NS-NB=200; NB-NE=500; CBX=790; ONI=1015 ONS=704
1 PHASE FAULT ON BREAKER 91H-523 AT TUFT'S COVE 69KV
CLEARS 5041 AND T11 TC1 OFF
FILE: e103b-91H-523-1p_nrecl-2013WP-DSM-NS-200.out
CHNL# 59: [POWR199169] [TUFTCV3 14.400] [3] 0.0
CHNL# 56: [POWR199086] [TRENTON613.800] [6] 0.0
CHNL# 55: [POWR199085] [TRENTN5 13.800] [5] 0.0
CHNL# 54: [POWR199061] [TMP1 STO13.800] [1] -1.500
CHNL# 52: [POWR199043] [ACONIG1 20.000] [1] 0.0
CHNL# 50: [POWR199001] [LINGAN1 14.400] [1] 0.0
TIME (SECONDS)
SAT, JAN 31 2009 15:43
NS MW

2013 WINTER PEAK WITH DSM - DELIVER RESERVE
NS-NB=200; NB-NE=500; CBX=790; ONI=1015 ONS=704
1 PHASE FAULT ON BREAKER 91H-523 AT TUFT'S COVE 69KV
CLEARS 5041 AND T11 TC1 OFF
FILE: e103b-91H-523-1p_nrecl-2013WP-DSM-NS-200.out
CHNL# 49: [POWER190472] [BLLDNG2 19.000] [1] 0.0
CHNL# 45: [POWER190456] [LEPRG1 26.000] [1] 4.0000
CHNL# 44: [POWER190450] [MACTG1 13.800] [1] 0.0
CHNL# 42: [POWER126652] [RAV 3 22.000] [1] 0.0
CHNL# 41: [POWER101063] [MYST G7 22.000] [1] 1.0000
CHNL# 40: [POWER100060] [MIS GT1 18.000] [1] 2.0000
TIME (SECONDS)
SAT, JAN 31 2009 15:43
"NE,NY,NB POWER"

NS WIND MV

NS WIND MW

"345KV VOLTAGE"

FREQUENCY HZ

2013 WINTER PEAK WITH DSM - DELIVER RESERVE
NS-NB=200; NB-NE=500; CBX=790; ONI=1015 ONS=704
1 PHASE FAULT ON BREAKER 91H-523 AT TUFT'S COVE 69KV
CLEARS 5041 AND T11 TC1 OFF
FILE: e103b-91H-523-1p_nrec-2013WP-DSM-NS-200.out
CHNL# 146: [VOLT199280 [TUSKET A138.00]]
CHNL# 145: [VOLT199193 [1H-WAS 138.00]]
CHNL# 144: [VOLT199165 [TUFT COVE138.00]]
CHNL# 143: [VOLT199138: [SPRNGHILL138.00]]
CHNL# 142: [VOLT199090 [50N-TREN138.00]]
CHNL# 141: [VOLT199051 [HASTINGS138.00]]
1.2000
0.70000
0.0
1.0000
2.0000
3.0000
4.0000
5.0000
6.0000
7.0000
8.0000
9.0000
10.000
TIME (SECONDS)
SAT, JAN 31 2009 15:43
138KV BUS VOLTS

2013 WINTER PEAK WITH DSM - DELIVER RESERVE
NS-NB=200; NB-NE=500; CBX=790; ONI=1015 ONS=704
1 PHASE FAULT ON BREAKER 91H-523 AT TUFT'S COVE 69KV
CLEARS 5041 AND T11 TC1 OFF
FILE: e103b-91H-523-1p_nrec-2013WP-DSM-NS-200.out
CHNL# 140: [VOLT199240 [BWATER A230.00]]
CHNL# 139: [VOLT199200 [BRUSHY 230.00]]
CHNL# 138: [VOLT199130 [ONSLOW 230.00]]
CHNL# 137: [VOLT199050 [HASTINGS230.00]]
CHNL# 136: [VOLT199044 [PT.ACONI230.00]]
CHNL# 135: [VOLT199000 [LINGAN 230.00]]
1.2000
0.70000
0.0
1.0000
2.0000
3.0000
4.0000
5.0000
6.0000
7.0000
8.0000
9.0000
10.000
TIME (SECONDS)
SAT, JAN 31 2009 15:43
230KV BUS VOLTS

2013 WINTER PEAK WITH DSM - DELIVER RESERVE
NS-NB=200; NB-NE=500; CBX=790; ONI=1015 ONS=704
1 PHASE FAULT ON BREAKER 91H-523 AT TUFT'S COVE 69KV
CLEARS 5041 AND T11 TC1 OFF
FILE: e103b-91H-523-1p_nrec-2013WP-DSM-NS-200.out
CHNL# 217: [L6533MW]
CHNL# 215: [L6503MW]
CHNL# 197: [L8003MW]
CHNL# 195: [L8004MW]
CHNL# 193: [L8001MW]
CHNL# 221: [L3001MW]
250.00
500.00
1000.0
0.0
-250.0
-1000.
0.0
1.0000
2.0000
3.0000
4.0000
5.0000
6.0000
7.0000
8.0000
9.0000
10.000
TIME (SECONDS)
SAT, JAN 31 2009 15:43
LINE FLOW MW

2013 WINTER PEAK WITH DSM - DELIVER RESERVE
NS-NB=200; NB-NE=500; CBX=790; ONI=1015 ONS=704
1 PHASE FAULT ON BREAKER 91H-523 AT TUFT'S COVE 69KV
CLEARS 5041 AND T11 TC1 OFF
FILE: e103b-91H-523-1p_nrec-2013WP-DSM-NS-200.out
CHNL# 154: [IR141-DIGBYH69.0 VOLTS]
CHNL# 153: [IR137-STATIG25.0 VOLTS]
CHNL# 152: [IR114-GLENDH138.0 VOLTS]
CHNL# 151: [IR84-DALHOHV230.0 VOLTS]
CHNL# 150: [IR82 NUTBHV69.0 VOLTS]
CHNL# 149: [IR45 AMHERTP138.0 VOLTS]
1.2000
0.70000
0.0
1.0000
2.0000
3.0000
4.0000
5.0000
6.0000
7.0000
8.0000
9.0000
10.000
TIME (SECONDS)
SAT, JAN 31 2009 15:43
WIND BUS VOLTS

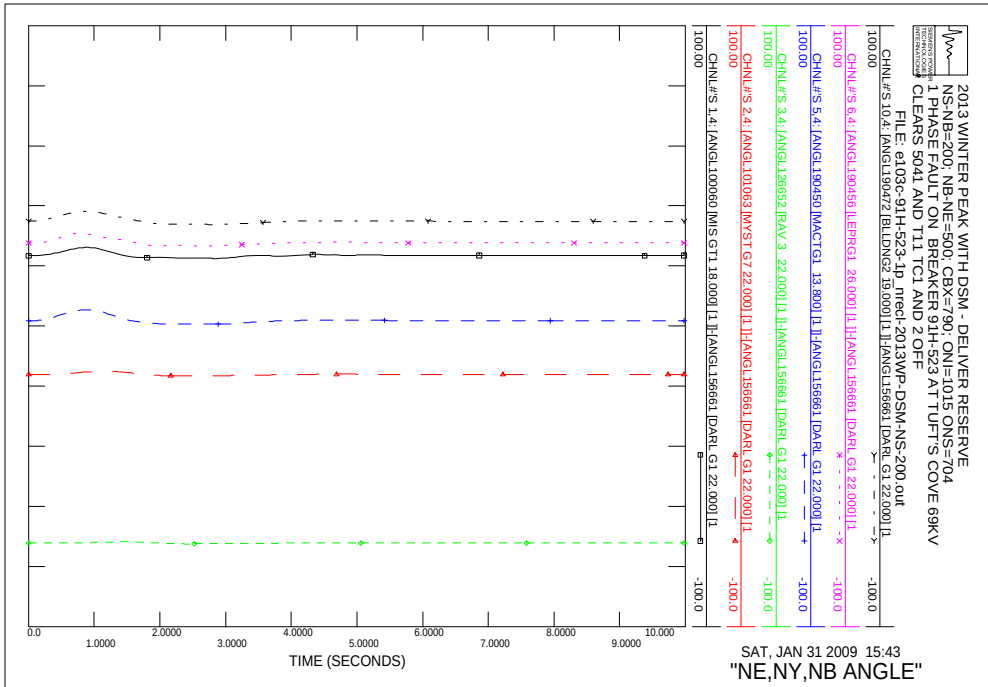
2013 WINTER PEAK WITH DSM - DELIVER RESERVE
NS-NB=200; NB-NE=500; CBX=790; ONI=1015 ONS=704
1 PHASE FAULT ON BREAKER 91H-523 AT TUFT'S COVE 69KV
CLEARS 5041 AND T11 TC1 AND 2 OFF
FILE: e103c-91H-523-1p_nrecl-2013WP-DSM-NS-200.out
CHNL#'S 10,4: [ANGL190472 [BLLDNG2 19.000] [1]]-[ANGL156661 [DARL G1 22.000] [1
CHNL#'S 6,4: [ANGL190456 [LEPRG1 26.000] [1]]-[ANGL156661 [DARL G1 22.000] [1
CHNL#'S 5,4: [ANGL190450 [MACTG1 13.800] [1]]-[ANGL156661 [DARL G1 22.000] [1
CHNL#'S 3,4: [ANGL126652 [RAV 3 22.000] [1]]-[ANGL156661 [DARL G1 22.000] [1
CHNL#'S 2,4: [ANGL101063 [MYST G7 22.000] [1]]-[ANGL156661 [DARL G1 22.000] [1
CHNL#'S 1,4: [ANGL100060 [MIS GT1 18.000] [1]]-[ANGL156661 [DARL G1 22.000] [1
100.00
-100.0
0.0
1.0000
2.0000
3.0000
4.0000
5.0000
6.0000
7.0000
8.0000
9.0000
10.000
TIME (SECONDS)
SAT, JAN 31 2009 15:43
"NE,NY,NB ANGLE"

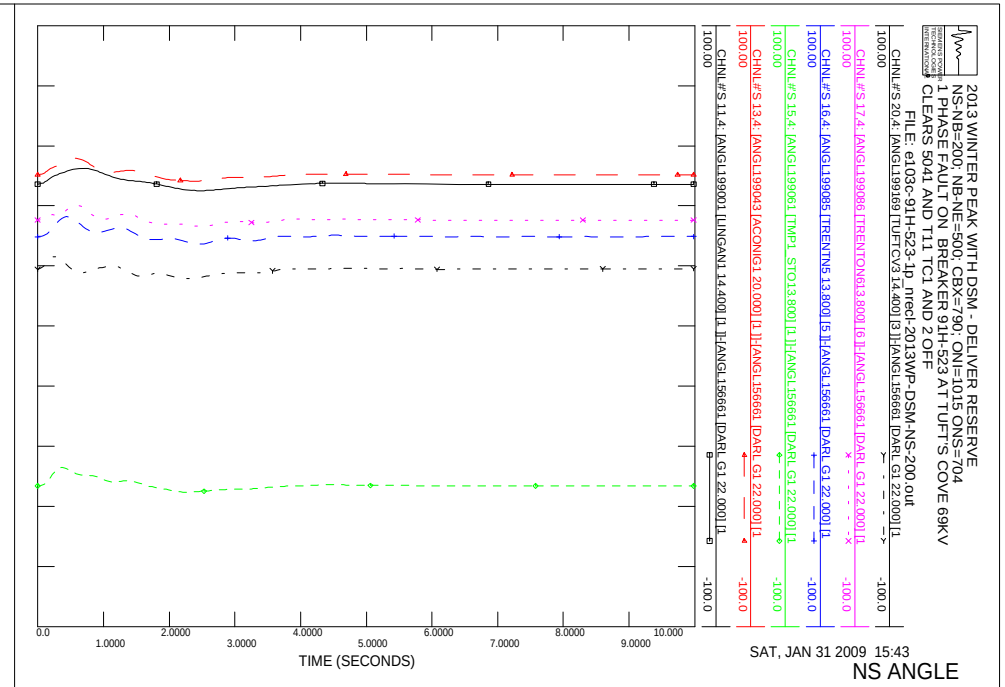
2013 WINTER PEAK WITH DSM - DELIVER RESERVE
NS-NB=200; NB-NE=500; CBX=790; ONI=1015 ONS=704
1 PHASE FAULT ON BREAKER 91H-523 AT TUFT'S COVE 69KV
CLEARS 5041 AND T11 TC1 AND 2 OFF
FILE: e103c-91H-523-1p_nrecl-2013WP-DSM-NS-200.out
CHNL#'S 20,4: [ANGL199169 [TUFTCV3 14.400] [3]]-[ANGL156661 [DARL G1 22.000] [1
CHNL#'S 17,4: [ANGL199086 [TRENTON613.800] [6]]-[ANGL156661 [DARL G1 22.000] [1
CHNL#'S 16,4: [ANGL199085 [TRENTN5 13.800] [5]]-[ANGL156661 [DARL G1 22.000] [1
CHNL#'S 15,4: [ANGL199061 [TMP1 STO13.800] [1]]-[ANGL156661 [DARL G1 22.000] [1
CHNL#'S 13,4: [ANGL199043 [ACONIG1 20.000] [1]]-[ANGL156661 [DARL G1 22.000] [1
CHNL#'S 11,4: [ANGL199001 [LINGAN1 14.400] [1]]-[ANGL156661 [DARL G1 22.000] [1
100.00
-100.0
0.0
1.0000
2.0000
3.0000
4.0000
5.0000
6.0000
7.0000
8.0000
9.0000
10.000
TIME (SECONDS)
SAT, JAN 31 2009 15:43
NS ANGLE

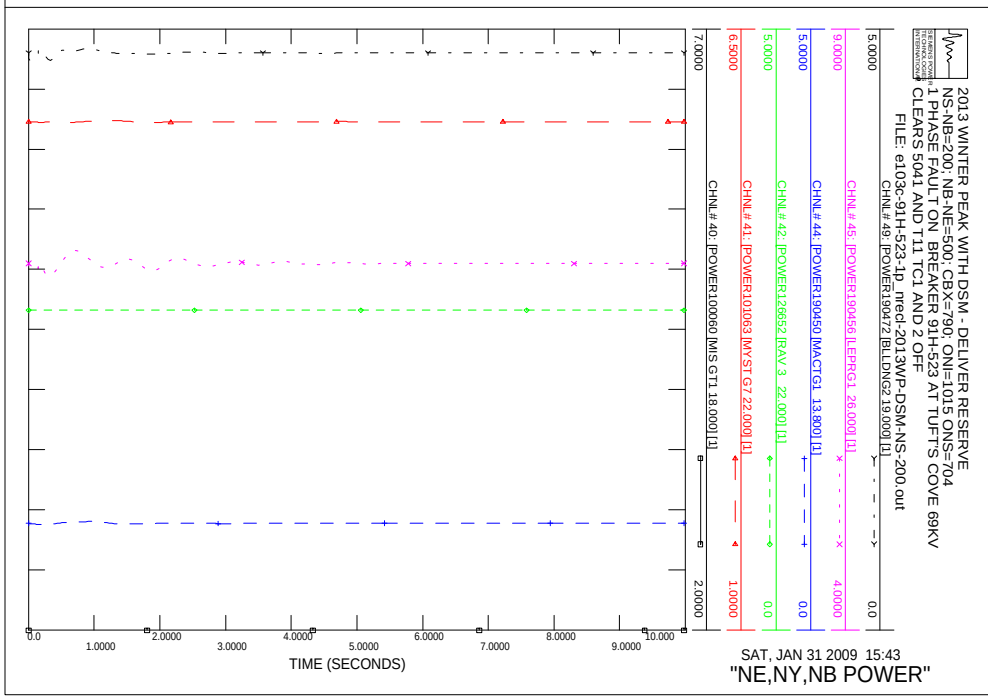
2013 WINTER PEAK WITH DSM - DELIVER RESERVE
NS-NB=200; NB-NE=500; CBX=790; ONI=1015 ONS=704
1 PHASE FAULT ON BREAKER 91H-523 AT TUFT'S COVE 69KV
CLEARS 5041 AND T11 TC1 AND 2 OFF
FILE: e103c-91H-523-1p_nrecl-2013WP-DSM-NS-200.out
CHNL# 49: [POWER190472 [BLLDNG2 19.000] [1]
CHNL# 45: [POWER190456 [LEPRG1 26.000] [1]
CHNL# 44: [POWER190450 [MACTG1 13.800] [1]
CHNL# 42: [POWER126652 [RAV 3 22.000] [1]
CHNL# 41: [POWER101063 [MYST G7 22.000] [1]
CHNL# 40: [POWER100060 [MIS GT1 18.000] [1]
5.0000
0.0
9.0000
4.0000
5.0000
0.0
5.0000
0.0
6.5000
1.0000
7.0000
2.0000
0.0
1.0000
2.0000
3.0000
4.0000
5.0000
6.0000
7.0000
8.0000
9.0000
10.000
TIME (SECONDS)
SAT, JAN 31 2009 15:43
"NE,NY,NB POWER"

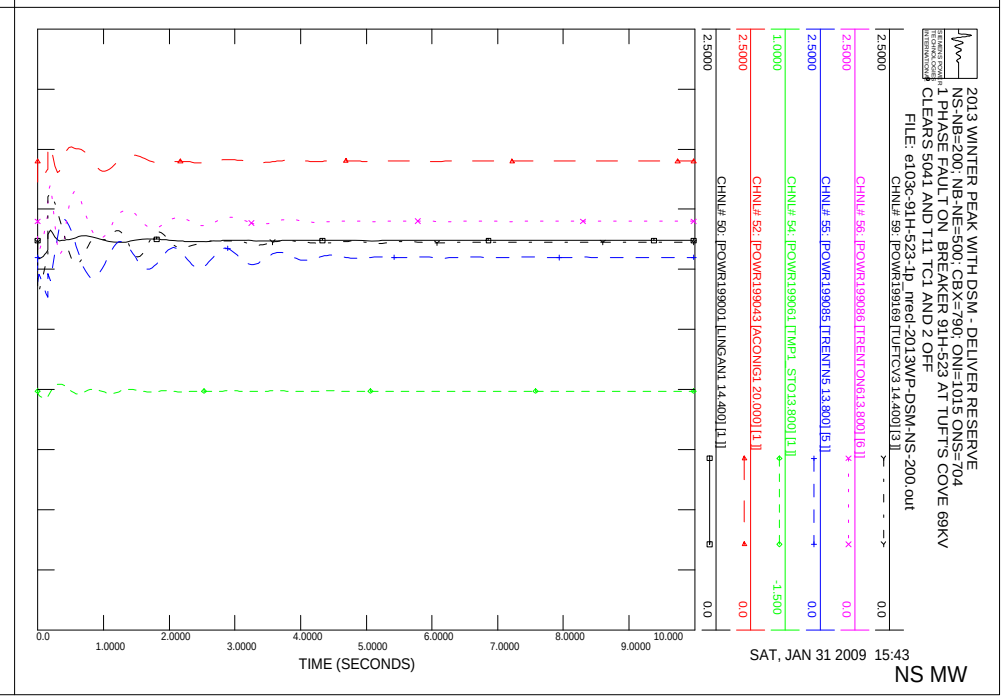
2013 WINTER PEAK WITH DSM - DELIVER RESERVE
NS-NB=200; NB-NE=500; CBX=790; ONI=1015 ONS=704
1 PHASE FAULT ON BREAKER 91H-523 AT TUFT'S COVE 69KV
CLEARS 5041 AND T11 TC1 AND 2 OFF
FILE: e103c-91H-523-1p_nrecl-2013WP-DSM-NS-200.out
CHNL# 59: [POWR199169 [TUFTCV3 14.400] [3]]
CHNL# 56: [POWR199086 [TRENTON613.800] [6]]
CHNL# 55: [POWR199085 [TRENTN5 13.800] [5]]
CHNL# 54: [POWR199061 [TMP1 STO13.800] [1]]
CHNL# 52: [POWR199043 [ACONIG1 20.000] [1]]
CHNL# 50: [POWR199001 [LINGAN1 14.400] [1]]
2.5000
0.0
2.5000
0.0
2.5000
0.0
1.0000
-1.500
2.5000
0.0
2.5000
0.0
0.0
1.0000
2.0000
3.0000
4.0000
5.0000
6.0000
7.0000
8.0000
9.0000
10.000
TIME (SECONDS)
SAT, JAN 31 2009 15:43
NS MW

2013 WINTER PEAK WITH DSM - DELIVER RESERVE
NS-NB=200; NB-NE=500; CBX=790; ONI=1015 ONS=704
1 PHASE FAULT ON BREAKER 91H-523 AT TUFT'S COVE 69KV
CLEARS 5041 AND T11 TC1 AND 2 OFF
FILE: e103c-91H-523-1p_mecl-2013WP-DSM-NS-200.out
CHNL# 119: [VARS IR141-DIGBY]
CHNL# 118: [VARS IR137-STATIA]
CHNL# 117: [VARS IR114-GLENDHU]
CHNL# 116: [VARS IR84-DALHOUSIE]
CHNL# 115: [VARS IR82_NUTTBY]
CHNL# 114: [VARS IR45_AMHERST]
0.50000
-0.5000
0.0
1.0000
2.0000
3.0000
4.0000
5.0000
6.0000
7.0000
8.0000
9.0000
10.000
TIME (SECONDS)
SAT, JAN 31 2009 15:43
NS WIND MV

2013 WINTER PEAK WITH DSM - DELIVER RESERVE
NS-NB=200; NB-NE=500; CBX=790; ONI=1015 ONS=704
1 PHASE FAULT ON BREAKER 91H-523 AT TUFT'S COVE 69KV
CLEARS 5041 AND T11 TC1 AND 2 OFF
FILE: e103c-91H-523-1p_mecl-2013WP-DSM-NS-200.out
CHNL# 79: [POWER IR141-DIGBY]
CHNL# 78: [POWER IR137-STATIA]
CHNL# 77: [POWER IR114-GLENDHU]
CHNL# 76: [POWER IR84-DALHOUSIE]
CHNL# 75: [POWER IR82_NUTTBY]
CHNL# 74: [POWER IR45_AMHERST]
1.0000
0.0
1.0000
2.0000
3.0000
4.0000
5.0000
6.0000
7.0000
8.0000
9.0000
10.000
TIME (SECONDS)
SAT, JAN 31 2009 15:43
NS WIND MW

2013 WINTER PEAK WITH DSM - DELIVER RESERVE
NS-NB=200; NB-NE=500; CBX=790; ONI=1015 ONS=704
1 PHASE FAULT ON BREAKER 91H-523 AT TUFT'S COVE 69KV
CLEARS 5041 AND T11 TC1 AND 2 OFF
FILE: e103c-91H-523-1p_mecl-2013WP-DSM-NS-200.out
CHNL# 133: [VOLT199125 [ONSLOW 345.00]]
CHNL# 132: [VOLT199120 [HOPEWELL 345.00]]
CHNL# 131: [VOLT199045 [WOODBINE345.00]]
CHNL# 130: [VOLT190320 [SALBRY 345.00]]
CHNL# 128: [VOLT190004 [KESWICK 345.00]]
CHNL# 127: [VOLT 70002 [ORRINGTN345.00]]
1.1000
0.90000
0.0
1.0000
2.0000
3.0000
4.0000
5.0000
6.0000
7.0000
8.0000
9.0000
10.000
TIME (SECONDS)
SAT, JAN 31 2009 15:43
"345KV VOLTAGE"

2013 WINTER PEAK WITH DSM - DELIVER RESERVE
NS-NB=200; NB-NE=500; CBX=790; ONI=1015 ONS=704
1 PHASE FAULT ON BREAKER 91H-523 AT TUFT'S COVE 69KV
CLEARS 5041 AND T11 TC1 AND 2 OFF
FILE: e103c-91H-523-1p_mecl-2013WP-DSM-NS-200.out
CHNL# 125: 60*(1+[FREQ199125 [ONSLOW 345.00]])
CHNL# 124: 60*(1+[FREQ199120 [HOPEWELL 345.00]])
CHNL# 123: 60*(1+[FREQ199045 [WOODBINE345.00]])
CHNL# 122: 60*(1+[FREQ190320 [SALBRY 345.00]])
CHNL# 121: 60*(1+[FREQ190197 [C.COVE 345.00]])
CHNL# 120: 60*(1+[FREQ 70002 [ORRINGTN345.00]])
60.500
59.500
0.0
1.0000
2.0000
3.0000
4.0000
5.0000
6.0000
7.0000
8.0000
9.0000
10.000
TIME (SECONDS)
SAT, JAN 31 2009 15:43
FREQUENCY HZ

2013 WINTER PEAK WITH DSM - DELIVER RESERVE
NS-NB=200; NB-NE=500; CBX=790; ONI=1015 ONS=704
1 PHASE FAULT ON BREAKER 91H-523 AT TUFT'S COVE 69KV
CLEARS 5041 AND T11 TC1 AND 2 OFF
FILE: e103c-91H-523-1p_mrec-2013WP-DSM-NS-200.out
CHNL# 146: [VOLT199280 [TUSKET A138.00]]
CHNL# 145: [VOLT199193 [1H-WAS 138.00]]
CHNL# 144: [VOLT199165 [TUFT COVE138.00]]
CHNL# 143: [VOLT199138: [SPRNGHILL138.00]]
CHNL# 142: [VOLT199090 [50N-TREN138.00]]
CHNL# 141: [VOLT199051 [HASTINGS138.00]]
1.2000
0.70000
0.0
1.0000
2.0000
3.0000
4.0000
5.0000
6.0000
7.0000
8.0000
9.0000
10.000
TIME (SECONDS)
SAT, JAN 31 2009 15:43
138KV BUS VOLTS

2013 WINTER PEAK WITH DSM - DELIVER RESERVE
NS-NB=200; NB-NE=500; CBX=790; ONI=1015 ONS=704
1 PHASE FAULT ON BREAKER 91H-523 AT TUFT'S COVE 69KV
CLEARS 5041 AND T11 TC1 AND 2 OFF
FILE: e103c-91H-523-1p_mrec-2013WP-DSM-NS-200.out
CHNL# 140: [VOLT199240 [BWATER A230.00]]
CHNL# 139: [VOLT199200 [BRUSHY 230.00]]
CHNL# 138: [VOLT199130 [ONSLOW 230.00]]
CHNL# 137: [VOLT199050 [HASTINGS230.00]]
CHNL# 136: [VOLT199044 [PT.ACONI230.00]]
CHNL# 135: [VOLT199000 [LINGAN 230.00]]
1.2000
0.70000
0.0
1.0000
2.0000
3.0000
4.0000
5.0000
6.0000
7.0000
8.0000
9.0000
10.000
TIME (SECONDS)
SAT, JAN 31 2009 15:43
230KV BUS VOLTS

2013 WINTER PEAK WITH DSM - DELIVER RESERVE
NS-NB=200; NB-NE=500; CBX=790; ONI=1015 ONS=704
1 PHASE FAULT ON BREAKER 91H-523 AT TUFT'S COVE 69KV
CLEARS 5041 AND T11 TC1 AND 2 OFF
FILE: e103c-91H-523-1p_mrec-2013WP-DSM-NS-200.out
CHNL# 217: [L6513MW]
CHNL# 215: [L6503MW]
CHNL# 197: [L8003MW]
CHNL# 195: [L8004MW]
CHNL# 193: [L8001MW]
CHNL# 221: [L3001MW]
250.00
-250.0
500.00
0.0
1000.0
-1000.
0.0
1.0000
2.0000
3.0000
4.0000
5.0000
6.0000
7.0000
8.0000
9.0000
10.000
TIME (SECONDS)
SAT, JAN 31 2009 15:43
LINE FLOW MW

2013 WINTER PEAK WITH DSM - DELIVER RESERVE
NS-NB=200; NB-NE=500; CBX=790; ONI=1015 ONS=704
1 PHASE FAULT ON BREAKER 91H-523 AT TUFT'S COVE 69KV
CLEARS 5041 AND T11 TC1 AND 2 OFF
FILE: e103c-91H-523-1p_mrec-2013WP-DSM-NS-200.out
CHNL# 154: [IR141-DIGBYH69.0 VOLTS]
CHNL# 153: [IR137-STATIG25.0 VOLTS]
CHNL# 152: [IR114-GLENDH138.0 VOLTS]
CHNL# 151: [IR84-DALHOHV230.0 VOLTS]
CHNL# 150: [IR82-NUTBHV69.0 VOLTS]
CHNL# 149: [IR45-AMHERTP138.0 VOLTS]
1.2000
0.70000
0.0
1.0000
2.0000
3.0000
4.0000
5.0000
6.0000
7.0000
8.0000
9.0000
10.000
TIME (SECONDS)
SAT, JAN 31 2009 15:43
WIND BUS VOLTS

2013 WINTER PEAK WITH DSM - DELIVER RESERVE
NS-NB=200; NB-NE=500; CBX=790; ONI=1015 ONS=704
1 PHASE FAULT ON BREAKER 91H-523 AT TUFT'S COVE 69KV
CLEARS 5041 AND T11 ALL TC OFF
FILE: e103d-91H-523-1p_nrecl-2013WP-DSM-NS-200.out
CHNL# 20: [ANGL199169 [TUFTCV3 14.400] [3]] [ANGL156661 [DARL G1 22.000] [1]
CHNL# 17: [ANGL199086 [TRENTON613.800] [6]] [ANGL156661 [DARL G1 22.000] [1]
CHNL# 16: [ANGL199085 [TRENTN5 13.800] [5]] [ANGL156661 [DARL G1 22.000] [1]
CHNL# 15: [ANGL199061 [TMP1 STO13.800] [1]] [ANGL156661 [DARL G1 22.000] [1]
CHNL# 13: [ANGL199043 [ACONIG1 20.000] [1]] [ANGL156661 [DARL G1 22.000] [1]
CHNL# 11: [ANGL199001 [LINGAN1 14.400] [1]] [ANGL156661 [DARL G1 22.000] [1]
100.00
-100.0
0.0
1.0000
2.0000
3.0000
4.0000
5.0000
6.0000
7.0000
8.0000
9.0000
10.000
TIME (SECONDS)
SAT, JAN 31 2009 15:43
NS ANGLE

2013 WINTER PEAK WITH DSM - DELIVER RESERVE
NS-NB=200; NB-NE=500; CBX=790; ONI=1015 ONS=704
1 PHASE FAULT ON BREAKER 91H-523 AT TUFT'S COVE 69KV
CLEARS 5041 AND T11 ALL TC OFF
FILE: e103d-91H-523-1p_nrecl-2013WP-DSM-NS-200.out
CHNL# 10: [ANGL190472 [BLLDNG2 19.000] [1]] [ANGL156661 [DARL G1 22.000] [1]
CHNL# 6: [ANGL190456 [LEPRG1 26.000] [1]] [ANGL156661 [DARL G1 22.000] [1]
CHNL# 5: [ANGL190450 [MACTG1 13.800] [1]] [ANGL156661 [DARL G1 22.000] [1]
CHNL# 3: [ANGL126652 [RAV 3 22.000] [1]] [ANGL156661 [DARL G1 22.000] [1]
CHNL# 2: [ANGL101063 [MYST G7 22.000] [1]] [ANGL156661 [DARL G1 22.000] [1]
CHNL# 1: [ANGL100060 [MIS GT1 18.000] [1]] [ANGL156661 [DARL G1 22.000] [1]
100.00
-100.0
0.0
1.0000
2.0000
3.0000
4.0000
5.0000
6.0000
7.0000
8.0000
9.0000
10.000
TIME (SECONDS)
SAT, JAN 31 2009 15:43
"NE,NY,NB ANGLE"

2013 WINTER PEAK WITH DSM - DELIVER RESERVE
NS-NB=200; NB-NE=500; CBX=790; ONI=1015 ONS=704
1 PHASE FAULT ON BREAKER 91H-523 AT TUFT'S COVE 69KV
CLEARS 5041 AND T11 ALL TC OFF
FILE: e103d-91H-523-1p_nrecl-2013WP-DSM-NS-200.out
CHNL# 59: [POWR199169 [TUFTCV3 14.400] [3]]
CHNL# 56: [POWR199086 [TRENTON613.800] [6]]
CHNL# 55: [POWR199085 [TRENTN5 13.800] [5]]
CHNL# 54: [POWR199061 [TMP1 STO13.800] [1]]
CHNL# 52: [POWR199043 [ACONIG1 20.000] [1]]
CHNL# 50: [POWR199001 [LINGAN1 14.400] [1]]
2.5000
0.0
-1.500
1.0000
10.000
TIME (SECONDS)
SAT, JAN 31 2009 15:43
NS MW

2013 WINTER PEAK WITH DSM - DELIVER RESERVE
NS-NB=200; NB-NE=500; CBX=790; ONI=1015 ONS=704
1 PHASE FAULT ON BREAKER 91H-523 AT TUFT'S COVE 69KV
CLEARS 5041 AND T11 ALL TC OFF
FILE: e103d-91H-523-1p_nrecl-2013WP-DSM-NS-200.out
CHNL# 49: [POWER190472 [BLLDNG2 19.000] [1]]
CHNL# 45: [POWER190456 [LEPRG1 26.000] [1]]
CHNL# 44: [POWER190450 [MACTG1 13.800] [1]]
CHNL# 42: [POWER126652 [RAV 3 22.000] [1]]
CHNL# 41: [POWER101063 [MYST G7 22.000] [1]]
CHNL# 40: [POWER100060 [MIS GT1 18.000] [1]]
5.0000
0.0
4.0000
1.0000
2.0000
10.000
TIME (SECONDS)
SAT, JAN 31 2009 15:43
"NE,NY,NB POWER"

2013 WINTER PEAK WITH DSM - DELIVER RESERVE
NS-NB=200; NB-NE=500; CBX=790; ONI=1015 ONS=704
1 PHASE FAULT ON BREAKER 91H-523 AT TUFT'S COVE 69KV
CLEARS 5041 AND T11 ALL TC OFF
FILE: e103d-91H-523-1p_nrecl-2013WP-DSM-NS-200.out
CHNL# 119: [VARS IR141-DIGBY]
CHNL# 118: [VARS IR137-STATIA]
CHNL# 117: [VARS IR114-GLENDHU]
CHNL# 116: [VARS IR84-DALHOUSIE]
CHNL# 115: [VARS IR82_NUTTBY]
CHNL# 114: [VARS IR45_AMHERST]
TIME (SECONDS)
SAT, JAN 31 2009 15:43
NS WIND MV

2013 WINTER PEAK WITH DSM - DELIVER RESERVE
NS-NB=200; NB-NE=500; CBX=790; ONI=1015 ONS=704
1 PHASE FAULT ON BREAKER 91H-523 AT TUFT'S COVE 69KV
CLEARS 5041 AND T11 ALL TC OFF
FILE: e103d-91H-523-1p_nrecl-2013WP-DSM-NS-200.out
CHNL# 79: [POWER IR141-DIGBY]
CHNL# 78: [POWER IR137-STATIA]
CHNL# 77: [POWER IR114-GLENDHU]
CHNL# 76: [POWER IR84-DALHOUSIE]
CHNL# 75: [POWER IR82_NUTTBY]
CHNL# 74: [POWER IR45_AMHERST]
TIME (SECONDS)
SAT, JAN 31 2009 15:43
NS WIND MW

2013 WINTER PEAK WITH DSM - DELIVER RESERVE
NS-NB=200; NB-NE=500; CBX=790; ONI=1015 ONS=704
1 PHASE FAULT ON BREAKER 91H-523 AT TUFT'S COVE 69KV
CLEARS 5041 AND T11 ALL TC OFF
FILE: e103d-91H-523-1p_nrecl-2013WP-DSM-NS-200.out
CHNL# 133: [VOLT199125 [ONSLOW 345.00]]
CHNL# 132: [VOLT199120 [HOPEWELL 345.00]]
CHNL# 131: [VOLT199045 [WOODBINE345.00]]
CHNL# 130: [VOLT190320 [SALBRY 345.00]]
CHNL# 128: [VOLT190004 [KESWICK 345.00]]
CHNL# 127: [VOLT 70002 [ORRINGTN345.00]]
TIME (SECONDS)
SAT, JAN 31 2009 15:43
"345KV VOLTAGE"

2013 WINTER PEAK WITH DSM - DELIVER RESERVE
NS-NB=200; NB-NE=500; CBX=790; ONI=1015 ONS=704
1 PHASE FAULT ON BREAKER 91H-523 AT TUFT'S COVE 69KV
CLEARS 5041 AND T11 ALL TC OFF
FILE: e103d-91H-523-1p_nrecl-2013WP-DSM-NS-200.out
CHNL# 125: 60*(1+[FREQ199125 [ONSLOW 345.00]])
CHNL# 124: 60*(1+[FREQ199120 [HOPEWELL 345.00]])
CHNL# 123: 60*(1+[FREQ199045 [WOODBINE345.00]])
CHNL# 122: 60*(1+[FREQ190320 [SALBRY 345.00]])
CHNL# 121: 60*(1+[FREQ190197 [C.COVE 345.00]])
CHNL# 120: 60*(1+[FREQ 70002 [ORRINGTN345.00]])
TIME (SECONDS)
SAT, JAN 31 2009 15:43
FREQUENCY HZ

2013 WINTER PEAK WITH DSM - DELIVER RESERVE
NS-NB=200; NB-NE=500; CBX=790; ONI=1015 ONS=704
1 PHASE FAULT ON BREAKER 91H-523 AT TUFT'S COVE 69KV
CLEARS 5041 AND T11 ALL TC OFF
FILE: e103d-91H-523-1p_nrecl-2013WP-DSM-NS-200.out
CHNL# 146: [VOLT199280 [TUSKET A138.00]]
CHNL# 145: [VOLT199193 [1H-WAS 138.00]]
CHNL# 144: [VOLT199165 [TUFT COVE138.00]]
CHNL# 143: [VOLT199138: [SPRNGHILL138.00]]
CHNL# 142: [VOLT199090 [50N-TREN138.00]]
CHNL# 141: [VOLT199051 [HASTINGS138.00]]
1.2000
0.70000
0.0
1.0000
2.0000
3.0000
4.0000
5.0000
6.0000
7.0000
8.0000
9.0000
10.000
TIME (SECONDS)
SAT, JAN 31 2009 15:43
138KV BUS VOLTS

2013 WINTER PEAK WITH DSM - DELIVER RESERVE
NS-NB=200; NB-NE=500; CBX=790; ONI=1015 ONS=704
1 PHASE FAULT ON BREAKER 91H-523 AT TUFT'S COVE 69KV
CLEARS 5041 AND T11 ALL TC OFF
FILE: e103d-91H-523-1p_nrecl-2013WP-DSM-NS-200.out
CHNL# 140: [VOLT199240 [BWATER A230.00]]
CHNL# 139: [VOLT199200 [BRUSHY 230.00]]
CHNL# 138: [VOLT199130 [ONSLOW 230.00]]
CHNL# 137: [VOLT199050 [HASTINGS230.00]]
CHNL# 136: [VOLT199044 [PT.ACONI230.00]]
CHNL# 135: [VOLT199000 [LINGAN 230.00]]
1.2000
0.70000
0.0
1.0000
2.0000
3.0000
4.0000
5.0000
6.0000
7.0000
8.0000
9.0000
10.000
TIME (SECONDS)
SAT, JAN 31 2009 15:43
230KV BUS VOLTS

2013 WINTER PEAK WITH DSM - DELIVER RESERVE
NS-NB=200; NB-NE=500; CBX=790; ONI=1015 ONS=704
1 PHASE FAULT ON BREAKER 91H-523 AT TUFT'S COVE 69KV
CLEARS 5041 AND T11 ALL TC OFF
FILE: e103d-91H-523-1p_nrecl-2013WP-DSM-NS-200.out
CHNL# 217: [L6533MW]
CHNL# 215: [L6503MW]
CHNL# 197: [L8003MW]
CHNL# 195: [L8004MW]
CHNL# 193: [L8001MW]
CHNL# 221: [L3001MW]
250.00
500.00
1000.0
0.0
-250.0
-1000.
0.70000
0.0
1.0000
2.0000
3.0000
4.0000
5.0000
6.0000
7.0000
8.0000
9.0000
10.000
TIME (SECONDS)
SAT, JAN 31 2009 15:43
LINE FLOW MW

2013 WINTER PEAK WITH DSM - DELIVER RESERVE
NS-NB=200; NB-NE=500; CBX=790; ONI=1015 ONS=704
1 PHASE FAULT ON BREAKER 91H-523 AT TUFT'S COVE 69KV
CLEARS 5041 AND T11 ALL TC OFF
FILE: e103d-91H-523-1p_nrecl-2013WP-DSM-NS-200.out
CHNL# 154: [IR141-DIGBYH69.0 VOLTS]
CHNL# 153: [IR137-STATIG25.0 VOLTS]
CHNL# 152: [IR114-GLENDH138.0 VOLTS]
CHNL# 151: [IR84-DALHOHV230.0 VOLTS]
CHNL# 150: [IR82 NUTBHV69.0 VOLTS]
CHNL# 149: [IR45 AMHERTP138.0 VOLTS]
1.2000
0.70000
0.0
1.0000
2.0000
3.0000
4.0000
5.0000
6.0000
7.0000
8.0000
9.0000
10.000
TIME (SECONDS)
SAT, JAN 31 2009 15:43
WIND BUS VOLTS

2013 WINTER PEAK WITH DSM - DELIVER RESERVE
NS-NB=200; NB-NE=500; CBX=790; ONI=1015 ONS=704
1 PHASE FAULT ON BREAKER 104H-600 AT BURNSIDE 138KV
CLEARS BUS; ALL BURNSIDE ON
FILE: e104a-104H-600-1p_nrecl-2013WP-DSM-NS-200.out
CHNL# 20: [ANGL199169 [TUFTCV3 14.400] [3]] [ANGL156661 [DARL G1 22.000] [1]
CHNL# 17: [ANGL199086 [TRENTON613.800] [6]] [ANGL156661 [DARL G1 22.000] [1]
CHNL# 16: [ANGL199085 [TRENTN5 13.800] [5]] [ANGL156661 [DARL G1 22.000] [1]
CHNL# 15: [ANGL199061 [TMP1 STO13.800] [1]] [ANGL156661 [DARL G1 22.000] [1]
CHNL# 13: [ANGL199043 [ACONIG1 20.000] [1]] [ANGL156661 [DARL G1 22.000] [1]
CHNL# 11: [ANGL199001 [LINGAN1 14.400] [1]] [ANGL156661 [DARL G1 22.000] [1]
100.00
-100.0
0.0
1.0000
2.0000
3.0000
4.0000
5.0000
6.0000
7.0000
8.0000
9.0000
10.000
TIME (SECONDS)
SAT, JAN 31 2009 15:43
NS ANGLE

2013 WINTER PEAK WITH DSM - DELIVER RESERVE
NS-NB=200; NB-NE=500; CBX=790; ONI=1015 ONS=704
1 PHASE FAULT ON BREAKER 104H-600 AT BURNSIDE 138KV
CLEARS BUS; ALL BURNSIDE ON
FILE: e104a-104H-600-1p_nrecl-2013WP-DSM-NS-200.out
CHNL# 10: [ANGL190472 [BLLDNG2 19.000] [1]] [ANGL156661 [DARL G1 22.000] [1]
CHNL# 6: [ANGL190456 [LEPRG1 26.000] [1]] [ANGL156661 [DARL G1 22.000] [1]
CHNL# 5: [ANGL190450 [MACTG1 13.800] [1]] [ANGL156661 [DARL G1 22.000] [1]
CHNL# 3: [ANGL126652 [RAV 3 22.000] [1]] [ANGL156661 [DARL G1 22.000] [1]
CHNL# 2: [ANGL101063 [MYST G7 22.000] [1]] [ANGL156661 [DARL G1 22.000] [1]
CHNL# 1: [ANGL100060 [MIS GT1 18.000] [1]] [ANGL156661 [DARL G1 22.000] [1]
100.00
-100.0
0.0
1.0000
2.0000
3.0000
4.0000
5.0000
6.0000
7.0000
8.0000
9.0000
10.000
TIME (SECONDS)
SAT, JAN 31 2009 15:43
"NE,NY,NB ANGLE"

2013 WINTER PEAK WITH DSM - DELIVER RESERVE
NS-NB=200; NB-NE=500; CBX=790; ONI=1015 ONS=704
1 PHASE FAULT ON BREAKER 104H-600 AT BURNSIDE 138KV
CLEARS BUS; ALL BURNSIDE ON
FILE: e104a-104H-600-1p_nrecl-2013WP-DSM-NS-200.out
CHNL# 59: [POWR199169 [TUFTCV3 14.400] [3]]
CHNL# 56: [POWR199086 [TRENTON613.800] [6]]
CHNL# 55: [POWR199085 [TRENTN5 13.800] [5]]
CHNL# 54: [POWR199061 [TMP1 STO13.800] [1]]
CHNL# 52: [POWR199043 [ACONIG1 20.000] [1]]
CHNL# 50: [POWR199001 [LINGAN1 14.400] [1]]
2.5000
0.0
-1.500
1.0000
2.0000
3.0000
4.0000
5.0000
6.0000
7.0000
8.0000
9.0000
10.000
TIME (SECONDS)
SAT, JAN 31 2009 15:43
NS MW

2013 WINTER PEAK WITH DSM - DELIVER RESERVE
NS-NB=200; NB-NE=500; CBX=790; ONI=1015 ONS=704
1 PHASE FAULT ON BREAKER 104H-600 AT BURNSIDE 138KV
CLEARS BUS; ALL BURNSIDE ON
FILE: e104a-104H-600-1p_nrecl-2013WP-DSM-NS-200.out
CHNL# 49: [POWER190472 [BLLDNG2 19.000] [1]]
CHNL# 45: [POWER190456 [LEPRG1 26.000] [1]]
CHNL# 44: [POWER190450 [MACTG1 13.800] [1]]
CHNL# 42: [POWER126652 [RAV 3 22.000] [1]]
CHNL# 41: [POWER101063 [MYST G7 22.000] [1]]
CHNL# 40: [POWER100060 [MIS GT1 18.000] [1]]
5.0000
0.0
4.0000
1.0000
2.0000
3.0000
4.0000
5.0000
6.0000
7.0000
8.0000
9.0000
10.000
TIME (SECONDS)
SAT, JAN 31 2009 15:43
"NE,NY,NB POWER"

2013 WINTER PEAK WITH DSM - DELIVER RESERVE
NS-NB=200; NB-NE=500; CBX=790; ONI=1015 ONS=704
1 PHASE FAULT ON BREAKER 104H-600 AT BURNSIDE 138KV
CLEARS BUS; ALL BURNSIDE ON
FILE: e104a-104H-600-1p_nrecl-2013WP-DSM-NS-200.out
CHNL# 119: [VARS IR141-DIGBY]
CHNL# 118: [VARS IR137-STATIA]
CHNL# 117: [VARS IR114-GLENDHU]
CHNL# 116: [VARS IR84-DALHOUSIE]
CHNL# 115: [VARS IR82_NUTTBY]
CHNL# 114: [VARS IR45_AMHERST]
TIME (SECONDS)
SAT, JAN 31 2009 15:43
NS WIND MV

2013 WINTER PEAK WITH DSM - DELIVER RESERVE
NS-NB=200; NB-NE=500; CBX=790; ONI=1015 ONS=704
1 PHASE FAULT ON BREAKER 104H-600 AT BURNSIDE 138KV
CLEARS BUS; ALL BURNSIDE ON
FILE: e104a-104H-600-1p_nrecl-2013WP-DSM-NS-200.out
CHNL# 79: [POWER IR141-DIGBY]
CHNL# 78: [POWER IR137-STATIA]
CHNL# 77: [POWER IR114-GLENDHU]
CHNL# 76: [POWER IR84-DALHOUSIE]
CHNL# 75: [POWER IR82_NUTTBY]
CHNL# 74: [POWER IR45_AMHERST]
TIME (SECONDS)
SAT, JAN 31 2009 15:43
NS WIND MW

2013 WINTER PEAK WITH DSM - DELIVER RESERVE
NS-NB=200; NB-NE=500; CBX=790; ONI=1015 ONS=704
1 PHASE FAULT ON BREAKER 104H-600 AT BURNSIDE 138KV
CLEARS BUS; ALL BURNSIDE ON
FILE: e104a-104H-600-1p_nrecl-2013WP-DSM-NS-200.out
CHNL# 133: [VOLT199125 [ONSLOW 345.00]]
CHNL# 132: [VOLT199120 [HOPEWELL 345.00]]
CHNL# 131: [VOLT199045 [WOODBINE345.00]]
CHNL# 130: [VOLT190320 [SALBRY 345.00]]
CHNL# 128: [VOLT190004 [KESWICK 345.00]]
CHNL# 127: [VOLT 70002 [ORRINGTN345.00]]
TIME (SECONDS)
SAT, JAN 31 2009 15:43
"345KV VOLTAGE"

2013 WINTER PEAK WITH DSM - DELIVER RESERVE
NS-NB=200; NB-NE=500; CBX=790; ONI=1015 ONS=704
1 PHASE FAULT ON BREAKER 104H-600 AT BURNSIDE 138KV
CLEARS BUS; ALL BURNSIDE ON
FILE: e104a-104H-600-1p_nrecl-2013WP-DSM-NS-200.out
CHNL# 125: 60*(1+[FREQ199125 [ONSLOW 345.00]])
CHNL# 124: 60*(1+[FREQ199120 [HOPEWELL 345.00]])
CHNL# 123: 60*(1+[FREQ199045 [WOODBINE345.00]])
CHNL# 122: 60*(1+[FREQ190320 [SALBRY 345.00]])
CHNL# 121: 60*(1+[FREQ190197 [C.COVE 345.00]])
CHNL# 120: 60*(1+[FREQ 70002 [ORRINGTN345.00]])
TIME (SECONDS)
SAT, JAN 31 2009 15:43
FREQUENCY HZ

2013 WINTER PEAK WITH DSM - DELIVER RESERVE
NS-NB=200; NB-NE=500; CBX=790; ONI=1015 ONS=704
1 PHASE FAULT ON BREAKER 104H-600 AT BURNSIDE 138KV
CLEARS BUS; ALL BURNSIDE ON
FILE: e104a-104H-600-1p_nrecl-2013WP-DSM-NS-200.out
CHNL# 146: [VOLT199280 [TUSKET A138.00]]
CHNL# 145: [VOLT199193 [HHWAS 138.00]]
CHNL# 144: [VOLT199165 [TUFTCOVE138.00]]
CHNL# 143: [VOLT199135 [SPRNGHILL138.00]]
CHNL# 142: [VOLT199090 [SON-TREN138.00]]
CHNL# 141: [VOLT199051 [HASTINGS138.00]]
1.2000
0.70000
0.0
1.0000
2.0000
3.0000
4.0000
5.0000
6.0000
7.0000
8.0000
9.0000
10.000
TIME (SECONDS)
SAT, JAN 31 2009 15:43
138KV BUS VOLTS

2013 WINTER PEAK WITH DSM - DELIVER RESERVE
NS-NB=200; NB-NE=500; CBX=790; ONI=1015 ONS=704
1 PHASE FAULT ON BREAKER 104H-600 AT BURNSIDE 138KV
CLEARS BUS; ALL BURNSIDE ON
FILE: e104a-104H-600-1p_nrecl-2013WP-DSM-NS-200.out
CHNL# 140: [VOLT199240 [BWATER A230.00]]
CHNL# 139: [VOLT199200 [BRUSHY 230.00]]
CHNL# 138: [VOLT199130 [ONSLOW 230.00]]
CHNL# 137: [VOLT199050 [HASTINGS230.00]]
CHNL# 136: [VOLT199044 [PT.ACONI230.00]]
CHNL# 135: [VOLT199000 [LINGAN 230.00]]
1.2000
0.70000
0.0
1.0000
2.0000
3.0000
4.0000
5.0000
6.0000
7.0000
8.0000
9.0000
10.000
TIME (SECONDS)
SAT, JAN 31 2009 15:43
230KV BUS VOLTS

2013 WINTER PEAK WITH DSM - DELIVER RESERVE
NS-NB=200; NB-NE=500; CBX=790; ONI=1015 ONS=704
1 PHASE FAULT ON BREAKER 104H-600 AT BURNSIDE 138KV
CLEARS BUS; ALL BURNSIDE ON
FILE: e104a-104H-600-1p_nrecl-2013WP-DSM-NS-200.out
CHNL# 217: [L6533MW]
CHNL# 215: [L6503MW]
CHNL# 197: [L8003MW]
CHNL# 195: [L8004MW]
CHNL# 193: [L8001MW]
CHNL# 221: [L3001MW]
250.00
500.00
1000.0
0.0
-250.0
-1000.
0.0
1.0000
2.0000
3.0000
4.0000
5.0000
6.0000
7.0000
8.0000
9.0000
10.000
TIME (SECONDS)
SAT, JAN 31 2009 15:43
LINE FLOW MW

2013 WINTER PEAK WITH DSM - DELIVER RESERVE
NS-NB=200; NB-NE=500; CBX=790; ONI=1015 ONS=704
1 PHASE FAULT ON BREAKER 104H-600 AT BURNSIDE 138KV
CLEARS BUS; ALL BURNSIDE ON
FILE: e104a-104H-600-1p_nrecl-2013WP-DSM-NS-200.out
CHNL# 154: [IR141-DIGBYH69.0 VOLTS]
CHNL# 153: [IR137-STATIG25.0 VOLTS]
CHNL# 152: [IR114-GLENDH138.0 VOLTS]
CHNL# 151: [IR84-DALHOHV230.0 VOLTS]
CHNL# 150: [IR82 NUTBHV69.0 VOLTS]
CHNL# 149: [IR45 AMHERTP138.0 VOLTS]
1.2000
0.70000
0.0
1.0000
2.0000
3.0000
4.0000
5.0000
6.0000
7.0000
8.0000
9.0000
10.000
TIME (SECONDS)
SAT, JAN 31 2009 15:43
WIND BUS VOLTS

2013 WINTER PEAK WITH DSM - DELIVER RESERVE
NS-NB=200; NB-NE=500; CBX=790; ONI=1015 ONS=704
1 PHASE FAULT ON BREAKER 104H-600 AT BURNSIDE 138KV
CLEARS BUS; ALL BURNSIDE OFF
FILE: e104b-104H-600-1p_nrecl-2013WP-DSM-NS-200.out
CHNL# 20: [ANGL199169 [TUFTCV3 14.400] [3]] [ANGL156661 [DARL G1 22.000] [1]
CHNL# 17: [ANGL199086 [TRENTON613.800] [6]] [ANGL156661 [DARL G1 22.000] [1]
CHNL# 16: [ANGL199085 [TRENTN5 13.800] [5]] [ANGL156661 [DARL G1 22.000] [1]
CHNL# 15: [ANGL199061 [TMP1 STO13.800] [1]] [ANGL156661 [DARL G1 22.000] [1]
CHNL# 13: [ANGL199043 [ACONIG1 20.000] [1]] [ANGL156661 [DARL G1 22.000] [1]
CHNL# 11: [ANGL199001 [LINGAN1 14.400] [1]] [ANGL156661 [DARL G1 22.000] [1]
100.00
-100.0
0.0
1.0000
2.0000
3.0000
4.0000
5.0000
6.0000
7.0000
8.0000
9.0000
10.000
TIME (SECONDS)
SAT, JAN 31 2009 15:43
NS ANGLE

2013 WINTER PEAK WITH DSM - DELIVER RESERVE
NS-NB=200; NB-NE=500; CBX=790; ONI=1015 ONS=704
1 PHASE FAULT ON BREAKER 104H-600 AT BURNSIDE 138KV
CLEARS BUS; ALL BURNSIDE OFF
FILE: e104b-104H-600-1p_nrecl-2013WP-DSM-NS-200.out
CHNL# 10: [ANGL190472 [BLLDNG2 19.000] [1]] [ANGL156661 [DARL G1 22.000] [1]
CHNL# 6: [ANGL190456 [LEPRG1 26.000] [1]] [ANGL156661 [DARL G1 22.000] [1]
CHNL# 5: [ANGL190450 [MACTG1 13.800] [1]] [ANGL156661 [DARL G1 22.000] [1]
CHNL# 3: [ANGL126652 [RAV 3 22.000] [1]] [ANGL156661 [DARL G1 22.000] [1]
CHNL# 2: [ANGL101063 [MYST G7 22.000] [1]] [ANGL156661 [DARL G1 22.000] [1]
CHNL# 1: [ANGL100060 [MIS GT1 18.000] [1]] [ANGL156661 [DARL G1 22.000] [1]
100.00
-100.0
0.0
1.0000
2.0000
3.0000
4.0000
5.0000
6.0000
7.0000
8.0000
9.0000
10.000
TIME (SECONDS)
SAT, JAN 31 2009 15:43
"NE,NY,NB ANGLE"

2013 WINTER PEAK WITH DSM - DELIVER RESERVE
NS-NB=200; NB-NE=500; CBX=790; ONI=1015 ONS=704
1 PHASE FAULT ON BREAKER 104H-600 AT BURNSIDE 138KV
CLEARS BUS; ALL BURNSIDE OFF
FILE: e104b-104H-600-1p_nrecl-2013WP-DSM-NS-200.out
CHNL# 59: [POWR199169 [TUFTCV3 14.400] [3]]
CHNL# 56: [POWR199086 [TRENTON613.800] [6]]
CHNL# 55: [POWR199085 [TRENTN5 13.800] [5]]
CHNL# 54: [POWR199061 [TMP1 STO13.800] [1]]
CHNL# 52: [POWR199043 [ACONIG1 20.000] [1]]
CHNL# 50: [POWR199001 [LINGAN1 14.400] [1]]
2.5000
1.0000
-1.500
0.0
1.0000
2.0000
3.0000
4.0000
5.0000
6.0000
7.0000
8.0000
9.0000
10.000
TIME (SECONDS)
SAT, JAN 31 2009 15:43
NS MW

2013 WINTER PEAK WITH DSM - DELIVER RESERVE
NS-NB=200; NB-NE=500; CBX=790; ONI=1015 ONS=704
1 PHASE FAULT ON BREAKER 104H-600 AT BURNSIDE 138KV
CLEARS BUS; ALL BURNSIDE OFF
FILE: e104b-104H-600-1p_nrecl-2013WP-DSM-NS-200.out
CHNL# 49: [POWER190472 [BLLDNG2 19.000] [1]]
CHNL# 45: [POWER190456 [LEPRG1 26.000] [1]]
CHNL# 44: [POWER190450 [MACTG1 13.800] [1]]
CHNL# 42: [POWER126652 [RAV 3 22.000] [1]]
CHNL# 41: [POWER101063 [MYST G7 22.000] [1]]
CHNL# 40: [POWER100060 [MIS GT1 18.000] [1]]
5.0000
9.0000
4.0000
0.0
1.0000
2.0000
3.0000
4.0000
5.0000
6.0000
7.0000
8.0000
9.0000
10.000
TIME (SECONDS)
SAT, JAN 31 2009 15:43
"NE,NY,NB POWER"

2013 WINTER PEAK WITH DSM - DELIVER RESERVE
NS-NB=200; NB-NE=500; CBX=790; ONI=1015 ONS=704
1 PHASE FAULT ON BREAKER 104H-600 AT BURNSIDE 138KV
CLEARS BUS; ALL BURNSIDE OFF
FILE: e104b-104H-600-1p_nrecl-2013WP-DSM-NS-200.out
CHNL# 119: [VARS IR141-DIGBY]
CHNL# 118: [VARS IR137-STATIA]
CHNL# 117: [VARS IR114-GLENDHU]
CHNL# 116: [VARS IR84-DALHOUSIE]
CHNL# 115: [VARS IR82_NUTTBY]
CHNL# 114: [VARS IR45_AMHERST]
TIME (SECONDS)
SAT, JAN 31 2009 15:43
NS WIND MV

2013 WINTER PEAK WITH DSM - DELIVER RESERVE
NS-NB=200; NB-NE=500; CBX=790; ONI=1015 ONS=704
1 PHASE FAULT ON BREAKER 104H-600 AT BURNSIDE 138KV
CLEARS BUS; ALL BURNSIDE OFF
FILE: e104b-104H-600-1p_nrecl-2013WP-DSM-NS-200.out
CHNL# 79: [POWER IR141-DIGBY]
CHNL# 78: [POWER IR137-STATIA]
CHNL# 77: [POWER IR114-GLENDHU]
CHNL# 76: [POWER IR84-DALHOUSIE]
CHNL# 75: [POWER IR82_NUTTBY]
CHNL# 74: [POWER IR45_AMHERST]
TIME (SECONDS)
SAT, JAN 31 2009 15:43
NS WIND MW

2013 WINTER PEAK WITH DSM - DELIVER RESERVE
NS-NB=200; NB-NE=500; CBX=790; ONI=1015 ONS=704
1 PHASE FAULT ON BREAKER 104H-600 AT BURNSIDE 138KV
CLEARS BUS; ALL BURNSIDE OFF
FILE: e104b-104H-600-1p_nrecl-2013WP-DSM-NS-200.out
CHNL# 133: [VOLT199125 [ONSLOW 345.00]]
CHNL# 132: [VOLT199120 [HOPEWELL 345.00]]
CHNL# 131: [VOLT199045 [WOODBINE345.00]]
CHNL# 130: [VOLT190320 [SALBRY 345.00]]
CHNL# 128: [VOLT190004 [KESWICK 345.00]]
CHNL# 127: [VOLT 70002 [ORRINGTN345.00]]
TIME (SECONDS)
SAT, JAN 31 2009 15:43
"345KV VOLTAGE"

2013 WINTER PEAK WITH DSM - DELIVER RESERVE
NS-NB=200; NB-NE=500; CBX=790; ONI=1015 ONS=704
1 PHASE FAULT ON BREAKER 104H-600 AT BURNSIDE 138KV
CLEARS BUS; ALL BURNSIDE OFF
FILE: e104b-104H-600-1p_nrecl-2013WP-DSM-NS-200.out
CHNL# 125: 60*(1+[FREQ199125 [ONSLOW 345.00]])
CHNL# 124: 60*(1+[FREQ199120 [HOPEWELL 345.00]])
CHNL# 123: 60*(1+[FREQ199045 [WOODBINE345.00]])
CHNL# 122: 60*(1+[FREQ190320 [SALBRY 345.00]])
CHNL# 121: 60*(1+[FREQ190197 [C.COVE 345.00]])
CHNL# 120: 60*(1+[FREQ 70002 [ORRINGTN345.00]])
TIME (SECONDS)
SAT, JAN 31 2009 15:43
FREQUENCY HZ

2013 WINTER PEAK WITH DSM - DELIVER RESERVE
NS-NB=200; NB-NE=500; CBX=790; ONI=1015 ONS=704
1 PHASE FAULT ON BREAKER 104H-600 AT BURNSIDE 138KV
CLEARS BUS; ALL BURNSIDE OFF
FILE: e104b-104H-600-1p_nrecl-2013WP-DSM-NS-200.out
CHNL# 146: [VOLT199280 [TUSKET A138.00]]
CHNL# 145: [VOLT199193 [HHWAS 138.00]]
CHNL# 144: [VOLT199165 [TUFTCOVE138.00]]
CHNL# 143: [VOLT199138: [SPRNGHILL138.00]]
CHNL# 142: [VOLT199090 [SON-TREN138.00]]
CHNL# 141: [VOLT199051 [HASTINGS138.00]]
1.2000
0.70000
0.0
1.0000
2.0000
3.0000
4.0000
5.0000
6.0000
7.0000
8.0000
9.0000
10.000
TIME (SECONDS)
SAT, JAN 31 2009 15:43
138KV BUS VOLTS

2013 WINTER PEAK WITH DSM - DELIVER RESERVE
NS-NB=200; NB-NE=500; CBX=790; ONI=1015 ONS=704
1 PHASE FAULT ON BREAKER 104H-600 AT BURNSIDE 138KV
CLEARS BUS; ALL BURNSIDE OFF
FILE: e104b-104H-600-1p_nrecl-2013WP-DSM-NS-200.out
CHNL# 140: [VOLT199240 [BWATER A230.00]]
CHNL# 139: [VOLT199200 [BRUSHY 230.00]]
CHNL# 138: [VOLT199130 [ONSLOW 230.00]]
CHNL# 137: [VOLT199050 [HASTINGS230.00]]
CHNL# 136: [VOLT199044 [PT.ACONI230.00]]
CHNL# 135: [VOLT199000 [LINGAN 230.00]]
1.2000
0.70000
0.0
1.0000
2.0000
3.0000
4.0000
5.0000
6.0000
7.0000
8.0000
9.0000
10.000
TIME (SECONDS)
SAT, JAN 31 2009 15:43
230KV BUS VOLTS

2013 WINTER PEAK WITH DSM - DELIVER RESERVE
NS-NB=200; NB-NE=500; CBX=790; ONI=1015 ONS=704
1 PHASE FAULT ON BREAKER 104H-600 AT BURNSIDE 138KV
CLEARS BUS; ALL BURNSIDE OFF
FILE: e104b-104H-600-1p_nrecl-2013WP-DSM-NS-200.out
CHNL# 217: [L6533MW]
CHNL# 215: [L6503MW]
CHNL# 197: [L8003MW]
CHNL# 195: [L8004MW]
CHNL# 193: [L8001MW]
CHNL# 221: [L3001MW]
250.00
500.00
1000.0
0.0
-250.0
-1000.
0.0
1.0000
2.0000
3.0000
4.0000
5.0000
6.0000
7.0000
8.0000
9.0000
10.000
TIME (SECONDS)
SAT, JAN 31 2009 15:43
LINE FLOW MW

2013 WINTER PEAK WITH DSM - DELIVER RESERVE
NS-NB=200; NB-NE=500; CBX=790; ONI=1015 ONS=704
1 PHASE FAULT ON BREAKER 104H-600 AT BURNSIDE 138KV
CLEARS BUS; ALL BURNSIDE OFF
FILE: e104b-104H-600-1p_nrecl-2013WP-DSM-NS-200.out
CHNL# 154: [IR141-DIGBYH69.0 VOLTS]
CHNL# 153: [IR137-STATIG25.0 VOLTS]
CHNL# 152: [IR114-GLENDH138.0 VOLTS]
CHNL# 151: [IR84-DALHOHV230.0 VOLTS]
CHNL# 150: [IR82 NUTBHV69.0 VOLTS]
CHNL# 149: [IR45 AMHERTP138.0 VOLTS]
1.2000
0.70000
0.0
1.0000
2.0000
3.0000
4.0000
5.0000
6.0000
7.0000
8.0000
9.0000
10.000
TIME (SECONDS)
SAT, JAN 31 2009 15:43
WIND BUS VOLTS

2013 WINTER PEAK WITH DSM - DELIVER RESERVE
NS-NB=200; NB-NE=500; CBX=790; ONI=1015 ONS=704
1 PHASE FAULT ON BUS B61 AT HOPEWELL
CLEARS BUS AND TRANSFORMER, OPEN ENDS L8003 TRIP L8004
FILE: g101-79N-B61-SPS_delay_mrec-2013WP-DSM-NS-200.out
CHNL# 20: [ANGL199169 [TUFTCV3 14.400] [3]] [ANGL156661 [DARL G1 22.000] [1]] 100.00 -100.0
CHNL# 17: [ANGL199086 [TRENTON613.800] [6]] [ANGL156661 [DARL G1 22.000] [1]] 100.00 -100.0
CHNL# 16: [ANGL199085 [TRENTN5 13.800] [5]] [ANGL156661 [DARL G1 22.000] [1]] 100.00 -100.0
CHNL# 15: [ANGL199061 [TMP1 STO13.800] [1]] [ANGL156661 [DARL G1 22.000] [1]] 100.00 -100.0
CHNL# 13: [ANGL199043 [ACONIG1 20.000] [1]] [ANGL156661 [DARL G1 22.000] [1]] 100.00 -100.0
CHNL# 11: [ANGL199001 [LINGAN1 14.400] [1]] [ANGL156661 [DARL G1 22.000] [1]] 100.00 -100.0
0.0 1.0000 2.0000 3.0000 4.0000 5.0000 6.0000 7.0000 8.0000 9.0000 10.000
TIME (SECONDS)
SAT, JAN 31 2009 15:43
NS ANGLE

2013 WINTER PEAK WITH DSM - DELIVER RESERVE
NS-NB=200; NB-NE=500; CBX=790; ONI=1015 ONS=704
1 PHASE FAULT ON BUS B61 AT HOPEWELL
CLEARS BUS AND TRANSFORMER, OPEN ENDS L8003 TRIP L8004
FILE: g101-79N-B61-SPS_delay_mrec-2013WP-DSM-NS-200.out
CHNL# 10: [ANGL190472 [BLLDNG2 19.000] [1]] [ANGL156661 [DARL G1 22.000] [1]] 100.00 -100.0
CHNL# 6: [ANGL190456 [LEPRG1 26.000] [1]] [ANGL156661 [DARL G1 22.000] [1]] 100.00 -100.0
CHNL# 5: [ANGL190450 [MACTG1 13.800] [1]] [ANGL156661 [DARL G1 22.000] [1]] 100.00 -100.0
CHNL# 3: [ANGL126652 [RAV 3 22.000] [1]] [ANGL156661 [DARL G1 22.000] [1]] 100.00 -100.0
CHNL# 2: [ANGL101063 [MYST G7 22.000] [1]] [ANGL156661 [DARL G1 22.000] [1]] 100.00 -100.0
CHNL# 1: [ANGL100060 [MIS GT1 18.000] [1]] [ANGL156661 [DARL G1 22.000] [1]] 100.00 -100.0
0.0 1.0000 2.0000 3.0000 4.0000 5.0000 6.0000 7.0000 8.0000 9.0000 10.000
TIME (SECONDS)
SAT, JAN 31 2009 15:43
"NE,NY,NB ANGLE"

2013 WINTER PEAK WITH DSM - DELIVER RESERVE
NS-NB=200; NB-NE=500; CBX=790; ONI=1015 ONS=704
1 PHASE FAULT ON BUS B61 AT HOPEWELL
CLEARS BUS AND TRANSFORMER, OPEN ENDS L8003 TRIP L8004
FILE: g101-79N-B61-SPS_delay_mrec-2013WP-DSM-NS-200.out
CHNL# 59: [POWER199169 [TUFTCV3 14.400] [3]] 2.5000 0.0
CHNL# 56: [POWER199086 [TRENTON613.800] [6]] 2.5000 0.0
CHNL# 55: [POWER199085 [TRENTN5 13.800] [5]] 2.5000 0.0
CHNL# 54: [POWER199061 [TMP1 STO13.800] [1]] 1.0000 -1.500
CHNL# 52: [POWER199043 [ACONIG1 20.000] [1]] 2.5000 0.0
CHNL# 50: [POWER199001 [LINGAN1 14.400] [1]] 2.5000 0.0
0.0 1.0000 2.0000 3.0000 4.0000 5.0000 6.0000 7.0000 8.0000 9.0000 10.000
TIME (SECONDS)
SAT, JAN 31 2009 15:43
NS MW

2013 WINTER PEAK WITH DSM - DELIVER RESERVE
NS-NB=200; NB-NE=500; CBX=790; ONI=1015 ONS=704
1 PHASE FAULT ON BUS B61 AT HOPEWELL
CLEARS BUS AND TRANSFORMER, OPEN ENDS L8003 TRIP L8004
FILE: g101-79N-B61-SPS_delay_mrec-2013WP-DSM-NS-200.out
CHNL# 49: [POWER190472 [BLLDNG2 19.000] [1]] 5.0000 0.0
CHNL# 45: [POWER190456 [LEPRG1 26.000] [1]] 9.0000 4.0000
CHNL# 44: [POWER190450 [MACTG1 13.800] [1]] 5.0000 0.0
CHNL# 42: [POWER126652 [RAV 3 22.000] [1]] 5.0000 0.0
CHNL# 41: [POWER101063 [MYST G7 22.000] [1]] 6.5000 1.0000
CHNL# 40: [POWER100060 [MIS GT1 18.000] [1]] 7.0000 2.0000
0.0 1.0000 2.0000 3.0000 4.0000 5.0000 6.0000 7.0000 8.0000 9.0000 10.000
TIME (SECONDS)
SAT, JAN 31 2009 15:43
"NE,NY,NB POWER"

2013 WINTER PEAK WITH DSM - DELIVER RESERVE
NS-NB=200; NB-NE=500; CBX=790; ONI=1015 ONS=704
1 PHASE FAULT ON BUS B61 AT HOPEWELL
CLEARS BUS AND TRANSFORMER, OPEN ENDS L8003 TRIP L8004
FILE: g101-79N-B61-SPS_delay_mrecl-2013WP-DSM-NS-200.out
CHNL# 119: [VARS IR141-DIGBY] 0.50000 -0.5000
CHNL# 118: [VARS IR137-STATIA] 0.50000 -0.5000
CHNL# 117: [VARS IR114-GLENDHU] 0.50000 -0.5000
CHNL# 116: [VARS IR84-DALHOUSIE] 0.50000 -0.5000
CHNL# 115: [VARS IR82_NUTTBY] 0.50000 -0.5000
CHNL# 114: [VARS IR45_AMHERST] 0.50000 -0.5000
0.0 1.0000 2.0000 3.0000 4.0000 5.0000 6.0000 7.0000 8.0000 9.0000 10.000
TIME (SECONDS)
SAT, JAN 31 2009 15:43
NS WIND MV

2013 WINTER PEAK WITH DSM - DELIVER RESERVE
NS-NB=200; NB-NE=500; CBX=790; ONI=1015 ONS=704
1 PHASE FAULT ON BUS B61 AT HOPEWELL
CLEARS BUS AND TRANSFORMER, OPEN ENDS L8003 TRIP L8004
FILE: g101-79N-B61-SPS_delay_mrecl-2013WP-DSM-NS-200.out
CHNL# 79: [POWER IR141-DIGBY] 1.0000 0.0
CHNL# 78: [POWER IR137-STATIA] 1.0000 0.0
CHNL# 77: [POWER IR114-GLENDHU] 1.0000 0.0
CHNL# 76: [POWER IR84-DALHOUSIE] 1.0000 0.0
CHNL# 75: [POWER IR82_NUTTBY] 1.0000 0.0
CHNL# 74: [POWER IR45_AMHERST] 1.0000 0.0
0.0 1.0000 2.0000 3.0000 4.0000 5.0000 6.0000 7.0000 8.0000 9.0000 10.000
TIME (SECONDS)
SAT, JAN 31 2009 15:43
NS WIND MW

2013 WINTER PEAK WITH DSM - DELIVER RESERVE
NS-NB=200; NB-NE=500; CBX=790; ONI=1015 ONS=704
1 PHASE FAULT ON BUS B61 AT HOPEWELL
CLEARS BUS AND TRANSFORMER, OPEN ENDS L8003 TRIP L8004
FILE: g101-79N-B61-SPS_delay_mrecl-2013WP-DSM-NS-200.out
CHNL# 133: [VOLT199125 [ONSLOW 345.00]] 1.1000 0.90000
CHNL# 132: [VOLT199120 [HOPEWELL 345.00]] 1.1000 0.90000
CHNL# 131: [VOLT199045 [WOODBINE345.00]] 1.1000 0.90000
CHNL# 130: [VOLT190320 [SALBRY 345.00]] 1.1000 0.90000
CHNL# 128: [VOLT190004 [KESWICK 345.00]] 1.1000 0.90000
CHNL# 127: [VOLT 70002 [ORRINGTN345.00]] 1.1000 0.90000
0.0 1.0000 2.0000 3.0000 4.0000 5.0000 6.0000 7.0000 8.0000 9.0000 10.000
TIME (SECONDS)
SAT, JAN 31 2009 15:43
"345KV VOLTAGE"

2013 WINTER PEAK WITH DSM - DELIVER RESERVE
NS-NB=200; NB-NE=500; CBX=790; ONI=1015 ONS=704
1 PHASE FAULT ON BUS B61 AT HOPEWELL
CLEARS BUS AND TRANSFORMER, OPEN ENDS L8003 TRIP L8004
FILE: g101-79N-B61-SPS_delay_mrecl-2013WP-DSM-NS-200.out
CHNL# 125: 60*(1+[FREQ199125 [ONSLOW 345.00]]) 60.500 59.500
CHNL# 124: 60*(1+[FREQ199120 [HOPEWELL 345.00]]) 60.500 59.500
CHNL# 123: 60*(1+[FREQ199045 [WOODBINE345.00]]) 60.500 59.500
CHNL# 122: 60*(1+[FREQ190320 [SALBRY 345.00]]) 60.500 59.500
CHNL# 121: 60*(1+[FREQ190197 [C.COVE 345.00]]) 60.500 59.500
CHNL# 120: 60*(1+[FREQ 70002 [ORRINGTN345.00]]) 60.500 59.500
0.0 1.0000 2.0000 3.0000 4.0000 5.0000 6.0000 7.0000 8.0000 9.0000 10.000
TIME (SECONDS)
SAT, JAN 31 2009 15:43
FREQUENCY HZ

2013 WINTER PEAK WITH DSM - DELIVER RESERVE
NS-NB=200; NB-NE=500; CBX=790; ONI=1015 ONS=704
1 PHASE FAULT ON BUS B61 AT HOPEWELL
CLEARS BUS AND TRANSFORMER, OPEN ENDS L8003 TRIP L8004
FILE: g101-79N-B61-SPS_delay_mrecl-2013WP-DSM-NS-200.out
CHNL# 146: [VOLT199280 [TUSKET A138.00]]
CHNL# 145: [VOLT199193 [HHWAS 138.00]]
CHNL# 144: [VOLT199165 [TUFTCOVE138.00]]
CHNL# 143: [VOLT199138 [SPRNGHILL138.00]]
CHNL# 142: [VOLT199090 [50N-TREN138.00]]
CHNL# 141: [VOLT199051 [HASTINGS138.00]]
1.2000
0.70000
0.0
1.0000
2.0000
3.0000
4.0000
5.0000
6.0000
7.0000
8.0000
9.0000
10.000
TIME (SECONDS)
SAT, JAN 31 2009 15:43
138KV BUS VOLTS

2013 WINTER PEAK WITH DSM - DELIVER RESERVE
NS-NB=200; NB-NE=500; CBX=790; ONI=1015 ONS=704
1 PHASE FAULT ON BUS B61 AT HOPEWELL
CLEARS BUS AND TRANSFORMER, OPEN ENDS L8003 TRIP L8004
FILE: g101-79N-B61-SPS_delay_mrecl-2013WP-DSM-NS-200.out
CHNL# 140: [VOLT199240 [BWATER A230.00]]
CHNL# 139: [VOLT199200 [BRUSHY 230.00]]
CHNL# 138: [VOLT199130 [ONSLOW 230.00]]
CHNL# 137: [VOLT199050 [HASTINGS230.00]]
CHNL# 136: [VOLT199044 [PT.ACONI230.00]]
CHNL# 135: [VOLT199000 [LINGAN 230.00]]
1.2000
0.70000
0.0
1.0000
2.0000
3.0000
4.0000
5.0000
6.0000
7.0000
8.0000
9.0000
10.000
TIME (SECONDS)
SAT, JAN 31 2009 15:43
230KV BUS VOLTS

2013 WINTER PEAK WITH DSM - DELIVER RESERVE
NS-NB=200; NB-NE=500; CBX=790; ONI=1015 ONS=704
1 PHASE FAULT ON BUS B61 AT HOPEWELL
CLEARS BUS AND TRANSFORMER, OPEN ENDS L8003 TRIP L8004
FILE: g101-79N-B61-SPS_delay_mrecl-2013WP-DSM-NS-200.out
CHNL# 217: [L6533MW]
CHNL# 215: [L6503MW]
CHNL# 197: [L8003MW]
CHNL# 195: [L8004MW]
CHNL# 193: [L8001MW]
CHNL# 221: [L3001MW]
250.00
-250.0
500.00
0.0
1000.0
-1000.
0.0
1.0000
2.0000
3.0000
4.0000
5.0000
6.0000
7.0000
8.0000
9.0000
10.000
TIME (SECONDS)
SAT, JAN 31 2009 15:43
LINE FLOW MW

2013 WINTER PEAK WITH DSM - DELIVER RESERVE
NS-NB=200; NB-NE=500; CBX=790; ONI=1015 ONS=704
1 PHASE FAULT ON BUS B61 AT HOPEWELL
CLEARS BUS AND TRANSFORMER, OPEN ENDS L8003 TRIP L8004
FILE: g101-79N-B61-SPS_delay_mrecl-2013WP-DSM-NS-200.out
CHNL# 154: [IR141-DIGBYH69.0 VOLTS]
CHNL# 153: [IR137-STATIG25.0 VOLTS]
CHNL# 152: [IR114-GLENDH138.0 VOLTS]
CHNL# 151: [IR84-DALHOHV230.0 VOLTS]
CHNL# 150: [IR82 NUTBHV69.0 VOLTS]
CHNL# 149: [IR45 AMHERTP138.0 VOLTS]
1.2000
0.70000
0.0
1.0000
2.0000
3.0000
4.0000
5.0000
6.0000
7.0000
8.0000
9.0000
10.000
TIME (SECONDS)
SAT, JAN 31 2009 15:43
WIND BUS VOLTS

2013 WINTER PEAK STORA 167, NS LOAD 2371
NS-NB=-200; NB-NE=300; CBX=543; ONI=773 ONS=863
3 PHASE FAULT ON L8003 AT HOPEWELL 345KV
CLEARED IN 4.5 CYCLES: SPS DROPS LINGAN 2
FILE: a07_1s-3p_8003_79n-2013WP-NS-import-200.out
CHNL#S 20:4 [ANGL199169 [TUFTCV3 14.400] [3]] [ANGL156661 [DARL G1 22.000] [1
CHNL#S 17:4 [ANGL199086 [TRENTON6613.8001 [6]] [ANGL156661 [DARL G1 22.000] [1
CHNL#S 16:4 [ANGL199085 [TRENTN5 13.800] [5]] [ANGL156661 [DARL G1 22.000] [1
CHNL#S 15:4 [ANGL199061 [TMP1 STO13.8001 [1]] [ANGL156661 [DARL G1 22.000] [1
CHNL#S 13:4 [ANGL199043 [ACONIG1 20.000] [1]] [ANGL156661 [DARL G1 22.000] [1
CHNL#S 11:4 [ANGL199001 [LINGAN1 14.400] [1]] [ANGL156661 [DARL G1 22.000] [1
TIME (SECONDS)
TUE, JAN 27 2009 15:53
NS ANGLE

2013 WINTER PEAK STORA 167, NS LOAD 2371
NS-NB=-200; NB-NE=300; CBX=543; ONI=773 ONS=863
3 PHASE FAULT ON L8003 AT HOPEWELL 345KV
CLEARED IN 4.5 CYCLES: SPS DROPS LINGAN 2
FILE: a07_1s-3p_8003_79n-2013WP-NS-import-200.out
CHNL#S 10:4 [ANGL190472 [BLLDNG2 19.000] [1]] [ANGL156661 [DARL G1 22.000] [1
CHNL#S 6:4 [ANGL190456 [LEPRG1 26.000] [1]] [ANGL156661 [DARL G1 22.000] [1
CHNL#S 5:4 [ANGL190450 [MACTG1 13.800] [1]] [ANGL156661 [DARL G1 22.000] [1
CHNL#S 3:4 [ANGL126652 [RAV 3 22.000] [1]] [ANGL156661 [DARL G1 22.000] [1
CHNL#S 2:4 [ANGL101063 [MYST G7 22.000] [1]] [ANGL156661 [DARL G1 22.000] [1
CHNL#S 1:4 [ANGL100060 [MIS GT1 18.000] [1]] [ANGL156661 [DARL G1 22.000] [1
TIME (SECONDS)
TUE, JAN 27 2009 15:53
"NE,NY,NB ANGLE"

2013 WINTER PEAK STORA 167, NS LOAD 2371
NS-NB=-200; NB-NE=300; CBX=543; ONI=773 ONS=863
3 PHASE FAULT ON L8003 AT HOPEWELL 345KV
CLEARED IN 4.5 CYCLES: SPS DROPS LINGAN 2
FILE: a07_1s-3p_8003_79n-2013WP-NS-import-200.out
CHNL# 59: [POWR199169 [TUFTCV3 14.400] [3]]
CHNL# 56: [POWR199086 [TRENTON6613.8001 [6]]
CHNL# 55: [POWR199085 [TRENTN5 13.800] [5]]
CHNL# 54: [POWR199061 [TMP1 STO13.8001 [1]]
CHNL# 52: [POWR199043 [ACONIG1 20.000] [1]]
CHNL# 50: [POWR199001 [LINGAN1 14.400] [1]]
TIME (SECONDS)
TUE, JAN 27 2009 15:53
NS MW

2013 WINTER PEAK STORA 167, NS LOAD 2371
NS-NB=-200; NB-NE=300; CBX=543; ONI=773 ONS=863
3 PHASE FAULT ON L8003 AT HOPEWELL 345KV
CLEARED IN 4.5 CYCLES: SPS DROPS LINGAN 2
FILE: a07_1s-3p_8003_79n-2013WP-NS-import-200.out
CHNL# 49: [POWER190472 [BLLDNG2 19.000] [1]
CHNL# 45: [POWER190456 [LEPRG1 26.000] [1]
CHNL# 44: [POWER190450 [MACTG1 13.800] [1]
CHNL# 42: [POWER126652 [RAV 3 22.000] [1]
CHNL# 41: [POWER101063 [MYST G7 22.000] [1]
CHNL# 40: [POWER100060 [MIS GT1 18.000] [1]
TIME (SECONDS)
TUE, JAN 27 2009 15:53
"NE,NY,NB POWER"

2013 WINTER PEAK STORA 167, NS LOAD 2371
NS-NB=-200; NB-NE=300; CBX=543; ONI=773 ONS=863
3 PHASE FAULT ON L8003 AT HOPEWELL 345KV
CLEARED IN 4.5 CYCLES: SPS DROPS LINGAN 2
FILE: a07.1s-3p_8003_79n-2013WP-NS-import-200.out
CHNL# 119: [VARS IR141-DIGBY]
CHNL# 118: [VARS IR137-STATIA]
CHNL# 117: [VARS IR114-GLENDHU]
CHNL# 116: [VARS IR84-DALHOUSIE]
CHNL# 115: [VARS IR82_NUTTBY]
CHNL# 114: [VARS IR45_AMHERST]
TIME (SECONDS)
TUE, JAN 27 2009 15:53
NS WIND MV

2013 WINTER PEAK STORA 167, NS LOAD 2371
NS-NB=-200; NB-NE=300; CBX=543; ONI=773 ONS=863
3 PHASE FAULT ON L8003 AT HOPEWELL 345KV
CLEARED IN 4.5 CYCLES: SPS DROPS LINGAN 2
FILE: a07.1s-3p_8003_79n-2013WP-NS-import-200.out
CHNL# 79: [POWER IR141-DIGBY]
CHNL# 78: [POWER IR137-STATIA]
CHNL# 77: [POWER IR114-GLENDHU]
CHNL# 76: [POWER IR84-DALHOUSIE]
CHNL# 75: [POWER IR82_NUTTBY]
CHNL# 74: [POWER IR45_AMHERST]
TIME (SECONDS)
TUE, JAN 27 2009 15:53
NS WIND MW

2013 WINTER PEAK STORA 167, NS LOAD 2371
NS-NB=-200; NB-NE=300; CBX=543; ONI=773 ONS=863
3 PHASE FAULT ON L8003 AT HOPEWELL 345KV
CLEARED IN 4.5 CYCLES: SPS DROPS LINGAN 2
FILE: a07.1s-3p_8003_79n-2013WP-NS-import-200.out
CHNL# 133: [VOLT199125 IONSLOW 345.00]
CHNL# 132: [VOLT199120 IHOPEWELL345.00]
CHNL# 131: [VOLT199045 IWOODBINE345.00]
CHNL# 130: [VOLT190320 ISALBRY 345.00]
CHNL# 128: [VOLT190004 IKESWICK 345.00]
CHNL# 127: [VOLT 70002 IORRINGTN345.00]
TIME (SECONDS)
TUE, JAN 27 2009 15:53
"345KV VOLTAGE"

2013 WINTER PEAK STORA 167, NS LOAD 2371
NS-NB=-200; NB-NE=300; CBX=543; ONI=773 ONS=863
3 PHASE FAULT ON L8003 AT HOPEWELL 345KV
CLEARED IN 4.5 CYCLES: SPS DROPS LINGAN 2
FILE: a07.1s-3p_8003_79n-2013WP-NS-import-200.out
CHNL# 125: 60*(1+[FREQ199125 IONSLOW 345.00])
CHNL# 124: 60*(1+[FREQ199120 IHOPEWELL345.00])
CHNL# 123: 60*(1+[FREQ199045 IWOODBINE345.00])
CHNL# 122: 60*(1+[FREQ190320 ISALBRY 345.00])
CHNL# 121: 60*(1+[FREQ190197 IC.COVE 345.00])
CHNL# 120: 60*(1+[FREQ 70002 IORRINGTN345.00])
TIME (SECONDS)
TUE, JAN 27 2009 15:53
FREQUENCY HZ

2013 WINTER PEAK STORA 167, NS LOAD 2371
NS-NB=-200; NB-NE=300; CBX=543; ONI=773 ONS=863
3 PHASE FAULT ON L8003 AT HOPEWELL 345KV
CLEARED IN 4.5 CYCLES: SPS DROPS LINGAN 2
FILE: a07.1s-3p_8003_79n-2013WP-NS-import-200.out
CHNL# 146: [VOLT199280 [TUSKET A138.00]]
CHNL# 145: [VOLT199193 [HHWAS 138.00]]
CHNL# 144: [VOLT199165 [TUFTCOVE138.00]]
CHNL# 143: [VOLT199138 [SPRNGHILL138.00]]
CHNL# 142: [VOLT199090 [SON-TREN138.00]]
CHNL# 141: [VOLT199051 [HASTINGS138.00]]
1.2000
0.70000
0.0
1.0000
2.0000
3.0000
4.0000
5.0000
6.0000
7.0000
8.0000
9.0000
10.000
TIME (SECONDS)
TUE, JAN 27 2009 15:53
138KV BUS VOLTS

2013 WINTER PEAK STORA 167, NS LOAD 2371
NS-NB=-200; NB-NE=300; CBX=543; ONI=773 ONS=863
3 PHASE FAULT ON L8003 AT HOPEWELL 345KV
CLEARED IN 4.5 CYCLES: SPS DROPS LINGAN 2
FILE: a07.1s-3p_8003_79n-2013WP-NS-import-200.out
CHNL# 140: [VOLT199240 [BWATER A230.00]]
CHNL# 139: [VOLT199200 [BRUSHY 230.00]]
CHNL# 138: [VOLT199130 [ONSLOW 230.00]]
CHNL# 137: [VOLT199050 [HASTINGS230.00]]
CHNL# 136: [VOLT199044 [PT.ACONI230.00]]
CHNL# 135: [VOLT199000 [LINGAN 230.00]]
1.2000
0.70000
0.0
1.0000
2.0000
3.0000
4.0000
5.0000
6.0000
7.0000
8.0000
9.0000
10.000
TIME (SECONDS)
TUE, JAN 27 2009 15:53
230KV BUS VOLTS

2013 WINTER PEAK STORA 167, NS LOAD 2371
NS-NB=-200; NB-NE=300; CBX=543; ONI=773 ONS=863
3 PHASE FAULT ON L8003 AT HOPEWELL 345KV
CLEARED IN 4.5 CYCLES: SPS DROPS LINGAN 2
FILE: a07.1s-3p_8003_79n-2013WP-NS-import-200.out
CHNL# 217: [L6513MW]
CHNL# 215: [L6503MW]
CHNL# 197: [L8003MW]
CHNL# 195: [L8004MW]
CHNL# 193: [L8001MW]
CHNL# 221: [L3001MW]
250.00
500.00
1000.0
0.0
-250.0
-1000.
TIME (SECONDS)
TUE, JAN 27 2009 15:53
LINE FLOW MW

2013 WINTER PEAK STORA 167, NS LOAD 2371
NS-NB=-200; NB-NE=300; CBX=543; ONI=773 ONS=863
3 PHASE FAULT ON L8003 AT HOPEWELL 345KV
CLEARED IN 4.5 CYCLES: SPS DROPS LINGAN 2
FILE: a07.1s-3p_8003_79n-2013WP-NS-import-200.out
CHNL# 154: [IR141-DIGBYH69.0 VOLTS]
CHNL# 153: [IR137-STATIG25.0 VOLTS]
CHNL# 152: [IR114-GLENDH138.0 VOLTS]
CHNL# 151: [IR84-DALHOHV230.0 VOLTS]
CHNL# 150: [IR82 NUTBHV69.0 VOLTS]
CHNL# 149: [IR45 AMHERTP138.0 VOLTS]
1.2000
0.70000
0.0
1.0000
2.0000
3.0000
4.0000
5.0000
6.0000
7.0000
8.0000
9.0000
10.000
TIME (SECONDS)
TUE, JAN 27 2009 15:53
WIND BUS VOLTS

2013 WINTER PEAK STORA 167, NS LOAD 2371
NS-NB=-200; NB-NE=300; CBX=543; ONI=773 ONS=863
3 PHASE FAULT ON L8003 AT ONSLOW
CLEARED IN 4.5 CYCLES: NO SPS
FILE: a07.2-3p_8003_67n-2013WP-NS-import-200.out
CHNL#S 20.4: [ANGL199169] [TUFTCV3 14.400] [3] [ANGL156661] [DARL G1 22.000] [1]
CHNL#S 17.4: [ANGL199086] [TRENTON6613.800] [6] [ANGL156661] [DARL G1 22.000] [1]
CHNL#S 16.4: [ANGL199085] [TRENTN5 13.800] [5] [ANGL156661] [DARL G1 22.000] [1]
CHNL#S 15.4: [ANGL199061] [TMP1 STO13.800] [1] [ANGL156661] [DARL G1 22.000] [1]
CHNL#S 13.4: [ANGL199043] [ACONIG1 20.000] [1] [ANGL156661] [DARL G1 22.000] [1]
CHNL#S 11.4: [ANGL199001] [LINGAN1 14.400] [1] [ANGL156661] [DARL G1 22.000] [1]
TIME (SECONDS)
TUE, JAN 27 2009 15:53
NS ANGLE

2013 WINTER PEAK STORA 167, NS LOAD 2371
NS-NB=-200; NB-NE=300; CBX=543; ONI=773 ONS=863
3 PHASE FAULT ON L8003 AT ONSLOW
CLEARED IN 4.5 CYCLES: NO SPS
FILE: a07.2-3p_8003_67n-2013WP-NS-import-200.out
CHNL#S 10.4: [ANGL190472] [BLLDNG2 19.000] [1] [ANGL156661] [DARL G1 22.000] [1]
CHNL#S 6.4: [ANGL190456] [LEPRG1 26.000] [1] [ANGL156661] [DARL G1 22.000] [1]
CHNL#S 5.4: [ANGL190450] [MACTG1 13.800] [1] [ANGL156661] [DARL G1 22.000] [1]
CHNL#S 3.4: [ANGL126652] [RAV 3 22.000] [1] [ANGL156661] [DARL G1 22.000] [1]
CHNL#S 2.4: [ANGL101063] [MYST G7 22.000] [1] [ANGL156661] [DARL G1 22.000] [1]
CHNL#S 1.4: [ANGL100060] [MIS GT1 18.000] [1] [ANGL156661] [DARL G1 22.000] [1]
TIME (SECONDS)
TUE, JAN 27 2009 15:53
"NE,NY,NB ANGLE"

2013 WINTER PEAK STORA 167, NS LOAD 2371
NS-NB=-200; NB-NE=300; CBX=543; ONI=773 ONS=863
3 PHASE FAULT ON L8003 AT ONSLOW
CLEARED IN 4.5 CYCLES: NO SPS
FILE: a07.2-3p_8003_67n-2013WP-NS-import-200.out
CHNL# 59: [POWER199169] [TUFTCV3 14.400] [3] [ ]
CHNL# 56: [POWER199086] [TRENTON6613.800] [6] [ ]
CHNL# 55: [POWER199085] [TRENTN5 13.800] [5] [ ]
CHNL# 54: [POWER199061] [TMP1 STO13.800] [1] [ ]
CHNL# 52: [POWER199043] [ACONIG1 20.000] [1] [ ]
CHNL# 50: [POWER199001] [LINGAN1 14.400] [1] [ ]
TIME (SECONDS)
TUE, JAN 27 2009 15:53
NS MW

2013 WINTER PEAK STORA 167, NS LOAD 2371
NS-NB=-200; NB-NE=300; CBX=543; ONI=773 ONS=863
3 PHASE FAULT ON L8003 AT ONSLOW
CLEARED IN 4.5 CYCLES: NO SPS
FILE: a07.2-3p_8003_67n-2013WP-NS-import-200.out
CHNL# 49: [POWER190472] [BLLDNG2 19.000] [1]
CHNL# 45: [POWER190456] [LEPRG1 26.000] [1]
CHNL# 44: [POWER190450] [MACTG1 13.800] [1]
CHNL# 42: [POWER126652] [RAV 3 22.000] [1]
CHNL# 41: [POWER101063] [MYST G7 22.000] [1]
CHNL# 40: [POWER100060] [MIS GT1 18.000] [1]
TIME (SECONDS)
TUE, JAN 27 2009 15:53
"NE,NY,NB POWER"

2013 WINTER PEAK STORA 167, NS LOAD 2371
NS-NB=-200; NB-NE=300; CBX=543; ONI=773 ONS=863
3 PHASE FAULT ON L8003 AT ONSLOW
CLEARED IN 4.5 CYCLES: NO SPS
FILE: a07.2-3p_8003_67n-2013WP-NS-import-200.out
CHNL# 119: [VARS IR141-DIGBY]
CHNL# 118: [VARS IR137-STATIA]
CHNL# 117: [VARS IR114-GLENDHU]
CHNL# 116: [VARS IR84-DALHOUSIE]
CHNL# 115: [VARS IR82_NUTTBY]
CHNL# 114: [VARS IR45_AMHERST]
TIME (SECONDS)
TUE, JAN 27 2009 15:53
NS WIND MV

2013 WINTER PEAK STORA 167, NS LOAD 2371
NS-NB=-200; NB-NE=300; CBX=543; ONI=773 ONS=863
3 PHASE FAULT ON L8003 AT ONSLOW
CLEARED IN 4.5 CYCLES: NO SPS
FILE: a07.2-3p_8003_67n-2013WP-NS-import-200.out
CHNL# 79: [POWER IR141-DIGBY]
CHNL# 78: [POWER IR137-STATIA]
CHNL# 77: [POWER IR114-GLENDHU]
CHNL# 76: [POWER IR84-DALHOUSIE]
CHNL# 75: [POWER IR82_NUTTBY]
CHNL# 74: [POWER IR45_AMHERST]
TIME (SECONDS)
TUE, JAN 27 2009 15:53
NS WIND MW

2013 WINTER PEAK STORA 167, NS LOAD 2371
NS-NB=-200; NB-NE=300; CBX=543; ONI=773 ONS=863
3 PHASE FAULT ON L8003 AT ONSLOW
CLEARED IN 4.5 CYCLES: NO SPS
FILE: a07.2-3p_8003_67n-2013WP-NS-import-200.out
CHNL# 133: [VOLT199125 [ONSLOW 345.00]]
CHNL# 132: [VOLT199120 [HOPEWELL 345.00]]
CHNL# 131: [VOLT199045 [WOODBINE345.00]]
CHNL# 130: [VOLT190320 [SALBRY 345.00]]
CHNL# 128: [VOLT190004 [KESWICK 345.00]]
CHNL# 127: [VOLT 70002 [ORRINGTN345.00]]
TIME (SECONDS)
TUE, JAN 27 2009 15:53
"345KV VOLTAGE"

2013 WINTER PEAK STORA 167, NS LOAD 2371
NS-NB=-200; NB-NE=300; CBX=543; ONI=773 ONS=863
3 PHASE FAULT ON L8003 AT ONSLOW
CLEARED IN 4.5 CYCLES: NO SPS
FILE: a07.2-3p_8003_67n-2013WP-NS-import-200.out
CHNL# 125: 60*(1+[FREQ199125 [ONSLOW 345.00]])
CHNL# 124: 60*(1+[FREQ199120 [HOPEWELL 345.00]])
CHNL# 123: 60*(1+[FREQ199045 [WOODBINE345.00]])
CHNL# 122: 60*(1+[FREQ190320 [SALBRY 345.00]])
CHNL# 121: 60*(1+[FREQ190197 [C.COVE 345.00]])
CHNL# 120: 60*(1+[FREQ 70002 [ORRINGTN345.00]])
TIME (SECONDS)
TUE, JAN 27 2009 15:53
FREQUENCY HZ

2013 WINTER PEAK STORA 167, NS LOAD 2371
NS-NB=-200; NB-NE=300; CBX=543; ONI=773 ONS=863
3 PHASE FAULT ON L8003 AT ONSLOW
CLEARED IN 4.5 CYCLES: NO SPS
FILE: a07.2-3p_8003_67n-2013WP-NS-import-200.out
CHNL# 146: [VOLT199280 TUSKET A138.00]
CHNL# 145: [VOLT199193 [H-WAS 138.00]
CHNL# 144: [VOLT199165 [TUFTCOVE138.00]
CHNL# 143: [VOLT199138 [SPRNGHILL138.00]
CHNL# 142: [VOLT199090 [SON-TREN138.00]
CHNL# 141: [VOLT199051 [HASTINGS138.00]
TIME (SECONDS)
TUE, JAN 27 2009 15:53
138KV BUS VOLTS

2013 WINTER PEAK STORA 167, NS LOAD 2371
NS-NB=-200; NB-NE=300; CBX=543; ONI=773 ONS=863
3 PHASE FAULT ON L8003 AT ONSLOW
CLEARED IN 4.5 CYCLES: NO SPS
FILE: a07.2-3p_8003_67n-2013WP-NS-import-200.out
CHNL# 140: [VOLT199240 [BWATER A230.00]
CHNL# 139: [VOLT199200 [BRUSHY 230.00]
CHNL# 138: [VOLT199130 [ONSLOW 230.00]
CHNL# 137: [VOLT199050 [HASTINGS230.00]
CHNL# 136: [VOLT199044 [PT.ACONI230.00]
CHNL# 135: [VOLT199000 [LINGAN 230.00]
TIME (SECONDS)
TUE, JAN 27 2009 15:53
230KV BUS VOLTS

2013 WINTER PEAK STORA 167, NS LOAD 2371
NS-NB=-200; NB-NE=300; CBX=543; ONI=773 ONS=863
3 PHASE FAULT ON L8003 AT ONSLOW
CLEARED IN 4.5 CYCLES: NO SPS
FILE: a07.2-3p_8003_67n-2013WP-NS-import-200.out
CHNL# 217: [L6533MW]
CHNL# 215: [L6503MW]
CHNL# 197: [L8003MW]
CHNL# 195: [L8004MW]
CHNL# 193: [L8001MW]
CHNL# 221: [L3001MW]
TIME (SECONDS)
TUE, JAN 27 2009 15:53
LINE FLOW MW

2013 WINTER PEAK STORA 167, NS LOAD 2371
NS-NB=-200; NB-NE=300; CBX=543; ONI=773 ONS=863
3 PHASE FAULT ON L8003 AT ONSLOW
CLEARED IN 4.5 CYCLES: NO SPS
FILE: a07.2-3p_8003_67n-2013WP-NS-import-200.out
CHNL# 154: [IR141-DIGBYH69.0 VOLTS]
CHNL# 153: [IR137-STATIG25.0 VOLTS]
CHNL# 152: [IR114-GLENDH138.0 VOLTS]
CHNL# 151: [IR84-DALHOHV230.0 VOLTS]
CHNL# 150: [IR82_NUTBHV69.0 VOLTS]
CHNL# 149: [IR45_AMHERTP138.0 VOLTS]
TIME (SECONDS)
TUE, JAN 27 2009 15:53
WIND BUS VOLTS

2013 WINTER PEAK STORA 167, NS LOAD 2371
NS-NB=-200; NB-NE=300; CBX=543; ONI=773 ONS=863
3 PHASE FAULT ON L8002 AT ONSLOW
CLEARED IN 4.5 CYCLES: NO SPS
FILE: a08-3p_8002_67n-2013WP-NS-import-200.out
CHNL#S 20.4: [ANGL199169 [TUFTCV3 14.400] [3]] [ANGL156661 [DARL G1 22.000] [1
CHNL#S 17.4: [ANGL199086 [TRENTON613.800] [6]] [ANGL156661 [DARL G1 22.000] [1
CHNL#S 16.4: [ANGL199085 [TRENTN5 13.800] [5]] [ANGL156661 [DARL G1 22.000] [1
CHNL#S 15.4: [ANGL199061 [TMP1 STO13.800] [1]] [ANGL156661 [DARL G1 22.000] [1
CHNL#S 13.4: [ANGL199043 [ACONIG1 20.000] [1]] [ANGL156661 [DARL G1 22.000] [1
CHNL#S 11.4: [ANGL199001 [LINGAN1 14.400] [1]] [ANGL156661 [DARL G1 22.000] [1
TIME (SECONDS)
TUE, JAN 27 2009 15:53
NS ANGLE

2013 WINTER PEAK STORA 167, NS LOAD 2371
NS-NB=-200; NB-NE=300; CBX=543; ONI=773 ONS=863
3 PHASE FAULT ON L8002 AT ONSLOW
CLEARED IN 4.5 CYCLES: NO SPS
FILE: a08-3p_8002_67n-2013WP-NS-import-200.out
CHNL#S 10.4: [ANGL190472 [BLLDNG2 19.000] [1]] [ANGL156661 [DARL G1 22.000] [1
CHNL#S 6.4: [ANGL190456 [LEPRG1 26.000] [1]] [ANGL156661 [DARL G1 22.000] [1
CHNL#S 5.4: [ANGL190450 [MACTG1 13.800] [1]] [ANGL156661 [DARL G1 22.000] [1
CHNL#S 3.4: [ANGL126652 [RAV 3 22.000] [1]] [ANGL156661 [DARL G1 22.000] [1
CHNL#S 2.4: [ANGL101063 [MYST G7 22.000] [1]] [ANGL156661 [DARL G1 22.000] [1
CHNL#S 1.4: [ANGL100060 [MIS GT1 18.000] [1]] [ANGL156661 [DARL G1 22.000] [1
TIME (SECONDS)
TUE, JAN 27 2009 15:53
"NE,NY,NB ANGLE"

2013 WINTER PEAK STORA 167, NS LOAD 2371
NS-NB=-200; NB-NE=300; CBX=543; ONI=773 ONS=863
3 PHASE FAULT ON L8002 AT ONSLOW
CLEARED IN 4.5 CYCLES: NO SPS
FILE: a08-3p_8002_67n-2013WP-NS-import-200.out
CHNL# 59: [POWR199169 [TUFTCV3 14.400] [3]]
CHNL# 56: [POWR199086 [TRENTON613.800] [6]]
CHNL# 55: [POWR199085 [TRENTN5 13.800] [5]]
CHNL# 54: [POWR199061 [TMP1 STO13.800] [1]]
CHNL# 52: [POWR199043 [ACONIG1 20.000] [1]]
CHNL# 50: [POWR199001 [LINGAN1 14.400] [1]]
TIME (SECONDS)
TUE, JAN 27 2009 15:53
NS MW

2013 WINTER PEAK STORA 167, NS LOAD 2371
NS-NB=-200; NB-NE=300; CBX=543; ONI=773 ONS=863
3 PHASE FAULT ON L8002 AT ONSLOW
CLEARED IN 4.5 CYCLES: NO SPS
FILE: a08-3p_8002_67n-2013WP-NS-import-200.out
CHNL# 49: [POWER190472 [BLLDNG2 19.000] [1]]
CHNL# 45: [POWER190456 [LEPRG1 26.000] [1]]
CHNL# 44: [POWER190450 [MACTG1 13.800] [1]]
CHNL# 42: [POWER126652 [RAV 3 22.000] [1]]
CHNL# 41: [POWER101063 [MYST G7 22.000] [1]]
CHNL# 40: [POWER100060 [MIS GT1 18.000] [1]]
TIME (SECONDS)
TUE, JAN 27 2009 15:53
"NE,NY,NB POWER"

2013 WINTER PEAK STORA 167, NS LOAD 2371
NS-NB=-200; NB-NE=300; CBX=543; ONI=773 ONS=863
3 PHASE FAULT ON L8002 AT ONSLOW
CLEARED IN 4.5 CYCLES: NO SPS
FILE: a08-3p_8002_67n-2013WP-NS-import-200.out
CHNL# 119: [VARS IR141-DIGBY]
CHNL# 118: [VARS IR137-STATIA]
CHNL# 117: [VARS IR114-GLENDHU]
CHNL# 116: [VARS IR84-DALHOUSIE]
CHNL# 115: [VARS IR82_NUTTBY]
CHNL# 114: [VARS IR45_AMHERST]
0.50000
-0.5000
0.0
1.0000
2.0000
3.0000
4.0000
5.0000
6.0000
7.0000
8.0000
9.0000
10.000
TIME (SECONDS)
TUE, JAN 27 2009 15:53
NS WIND MV

2013 WINTER PEAK STORA 167, NS LOAD 2371
NS-NB=-200; NB-NE=300; CBX=543; ONI=773 ONS=863
3 PHASE FAULT ON L8002 AT ONSLOW
CLEARED IN 4.5 CYCLES: NO SPS
FILE: a08-3p_8002_67n-2013WP-NS-import-200.out
CHNL# 79: [POWER IR141-DIGBY]
CHNL# 78: [POWER IR137-STATIA]
CHNL# 77: [POWER IR114-GLENDHU]
CHNL# 76: [POWER IR84-DALHOUSIE]
CHNL# 75: [POWER IR82_NUTTBY]
CHNL# 74: [POWER IR45_AMHERST]
1.0000
0.0
1.0000
2.0000
3.0000
4.0000
5.0000
6.0000
7.0000
8.0000
9.0000
10.000
TIME (SECONDS)
TUE, JAN 27 2009 15:53
NS WIND MW

2013 WINTER PEAK STORA 167, NS LOAD 2371
NS-NB=-200; NB-NE=300; CBX=543; ONI=773 ONS=863
3 PHASE FAULT ON L8002 AT ONSLOW
CLEARED IN 4.5 CYCLES: NO SPS
FILE: a08-3p_8002_67n-2013WP-NS-import-200.out
CHNL# 133: [VOLT199125 [ONSLOW 345.00]]
CHNL# 132: [VOLT199120 [HOPEWELL 345.00]]
CHNL# 131: [VOLT199045 [WOODBINE345.00]]
CHNL# 130: [VOLT190320 [SALBRY 345.00]]
CHNL# 128: [VOLT190004 [KESWICK 345.00]]
CHNL# 127: [VOLT 70002 [ORRINGTN345.00]]
1.1000
0.90000
0.0
1.0000
2.0000
3.0000
4.0000
5.0000
6.0000
7.0000
8.0000
9.0000
10.000
TIME (SECONDS)
TUE, JAN 27 2009 15:53
"345KV VOLTAGE"

2013 WINTER PEAK STORA 167, NS LOAD 2371
NS-NB=-200; NB-NE=300; CBX=543; ONI=773 ONS=863
3 PHASE FAULT ON L8002 AT ONSLOW
CLEARED IN 4.5 CYCLES: NO SPS
FILE: a08-3p_8002_67n-2013WP-NS-import-200.out
CHNL# 125: 60*(1+[FREQ199125 [ONSLOW 345.00]])
CHNL# 124: 60*(1+[FREQ199120 [HOPEWELL 345.00]])
CHNL# 123: 60*(1+[FREQ199045 [WOODBINE345.00]])
CHNL# 122: 60*(1+[FREQ190320 [SALBRY 345.00]])
CHNL# 121: 60*(1+[FREQ190197 [C.COVE 345.00]])
CHNL# 120: 60*(1+[FREQ 70002 [ORRINGTN345.00]])
60.500
59.500
0.0
1.0000
2.0000
3.0000
4.0000
5.0000
6.0000
7.0000
8.0000
9.0000
10.000
TIME (SECONDS)
TUE, JAN 27 2009 15:53
FREQUENCY HZ

2013 WINTER PEAK STORA 167, NS LOAD 2371
NS-NB=-200; NB-NE=300; CBX=543; ONI=773 ONS=863
3 PHASE FAULT ON L8002 AT ONSLOW
CLEARED IN 4.5 CYCLES: NO SPS
FILE: a08-3p_8002_67n-2013WP-NS-import-200.out
CHNL# 146: [VOLT199280 [TUSKET A138.00]]
CHNL# 145: [VOLT199193 [HHWAS 138.00]]
CHNL# 144: [VOLT199165 [TUFTCOVE138.00]]
CHNL# 143: [VOLT199138 [SPRNGHILL138.00]]
CHNL# 142: [VOLT199090 [SON-TREN138.00]]
CHNL# 141: [VOLT199051 [HASTINGS138.00]]
TIME (SECONDS)
TUE, JAN 27 2009 15:53
138KV BUS VOLTS

2013 WINTER PEAK STORA 167, NS LOAD 2371
NS-NB=-200; NB-NE=300; CBX=543; ONI=773 ONS=863
3 PHASE FAULT ON L8002 AT ONSLOW
CLEARED IN 4.5 CYCLES: NO SPS
FILE: a08-3p_8002_67n-2013WP-NS-import-200.out
CHNL# 140: [VOLT199240 [BWATER A230.00]]
CHNL# 139: [VOLT199200 [BRUSHY 230.00]]
CHNL# 138: [VOLT199130 [ONSLOW 230.00]]
CHNL# 137: [VOLT199050 [HASTINGS230.00]]
CHNL# 136: [VOLT199044 [PT.ACONI230.00]]
CHNL# 135: [VOLT199000 [LINGAN 230.00]]
TIME (SECONDS)
TUE, JAN 27 2009 15:53
230KV BUS VOLTS

2013 WINTER PEAK STORA 167, NS LOAD 2371
NS-NB=-200; NB-NE=300; CBX=543; ONI=773 ONS=863
3 PHASE FAULT ON L8002 AT ONSLOW
CLEARED IN 4.5 CYCLES: NO SPS
FILE: a08-3p_8002_67n-2013WP-NS-import-200.out
CHNL# 217: [L6533NMW]
CHNL# 215: [L6503MW]
CHNL# 197: [L8003MW]
CHNL# 195: [L8004MW]
CHNL# 193: [L8001MW]
CHNL# 221: [L3001MW]
TIME (SECONDS)
TUE, JAN 27 2009 15:53
LINE FLOW MW

2013 WINTER PEAK STORA 167, NS LOAD 2371
NS-NB=-200; NB-NE=300; CBX=543; ONI=773 ONS=863
3 PHASE FAULT ON L8002 AT ONSLOW
CLEARED IN 4.5 CYCLES: NO SPS
FILE: a08-3p_8002_67n-2013WP-NS-import-200.out
CHNL# 154: [IR141-DIGBYH69.0 VOLTS]
CHNL# 153: [IR137-STATIG25.0 VOLTS]
CHNL# 152: [IR114-GLENDH138.0 VOLTS]
CHNL# 151: [IR84-DALHOHV230.0 VOLTS]
CHNL# 150: [IR82_NUTBHV69.0 VOLTS]
CHNL# 149: [IR45_AMHERTP138.0 VOLTS]
TIME (SECONDS)
TUE, JAN 27 2009 15:53
WIND BUS VOLTS

2013 WINTER PEAK STORA 167, NS LOAD 2371
NS-NB=-200; NB-NE=300; CBX=543; ONI=773 ONS=863
3 PHASE FAULT ON L8001 AT ONSLOW
CLEARED IN 4.5 CYCLES: NO SPS
FILE: a09-3p_8001_67n-2013WP-NS-import-200.out
CHNL#S 20.4: [ANGL199169 [TUFTCV3 14.400] [3]] [ANGL156661 [DARL G1 22.000] [1
CHNL#S 17.4: [ANGL199086 [TRENTON613.800] [6]] [ANGL156661 [DARL G1 22.000] [1
CHNL#S 16.4: [ANGL199085 [TRENTN5 13.800] [5]] [ANGL156661 [DARL G1 22.000] [1
CHNL#S 15.4: [ANGL199061 [TMP1 STO13.800] [1]] [ANGL156661 [DARL G1 22.000] [1
CHNL#S 13.4: [ANGL199043 [ACONIG1 20.000] [1]] [ANGL156661 [DARL G1 22.000] [1
CHNL#S 11.4: [ANGL199001 [LINGAN1 14.400] [1]] [ANGL156661 [DARL G1 22.000] [1
TIME (SECONDS)
TUE, JAN 27 2009 15:53
NS ANGLE

2013 WINTER PEAK STORA 167, NS LOAD 2371
NS-NB=-200; NB-NE=300; CBX=543; ONI=773 ONS=863
3 PHASE FAULT ON L8001 AT ONSLOW
CLEARED IN 4.5 CYCLES: NO SPS
FILE: a09-3p_8001_67n-2013WP-NS-import-200.out
CHNL#S 10.4: [ANGL190472 [BLLDNG2 19.000] [1]] [ANGL156661 [DARL G1 22.000] [1
CHNL#S 6.4: [ANGL190456 [LEPRG1 26.000] [1]] [ANGL156661 [DARL G1 22.000] [1
CHNL#S 5.4: [ANGL190450 [MACTG1 13.800] [1]] [ANGL156661 [DARL G1 22.000] [1
CHNL#S 3.4: [ANGL126652 [RAV 3 22.000] [1]] [ANGL156661 [DARL G1 22.000] [1
CHNL#S 2.4: [ANGL101063 [MYST G7 22.000] [1]] [ANGL156661 [DARL G1 22.000] [1
CHNL#S 1.4: [ANGL100060 [MIS GT1 18.000] [1]] [ANGL156661 [DARL G1 22.000] [1
TIME (SECONDS)
TUE, JAN 27 2009 15:53
"NE,NY,NB ANGLE"

2013 WINTER PEAK STORA 167, NS LOAD 2371
NS-NB=-200; NB-NE=300; CBX=543; ONI=773 ONS=863
3 PHASE FAULT ON L8001 AT ONSLOW
CLEARED IN 4.5 CYCLES: NO SPS
FILE: a09-3p_8001_67n-2013WP-NS-import-200.out
CHNL# 59: [POWER199169 [TUFTCV3 14.400] [3]]
CHNL# 56: [POWER199086 [TRENTON613.800] [6]]
CHNL# 55: [POWER199085 [TRENTN5 13.800] [5]]
CHNL# 54: [POWER199061 [TMP1 STO13.800] [1]]
CHNL# 52: [POWER199043 [ACONIG1 20.000] [1]]
CHNL# 50: [POWER199001 [LINGAN1 14.400] [1]]
TIME (SECONDS)
TUE, JAN 27 2009 15:53
NS MW

2013 WINTER PEAK STORA 167, NS LOAD 2371
NS-NB=-200; NB-NE=300; CBX=543; ONI=773 ONS=863
3 PHASE FAULT ON L8001 AT ONSLOW
CLEARED IN 4.5 CYCLES: NO SPS
FILE: a09-3p_8001_67n-2013WP-NS-import-200.out
CHNL# 49: [POWER190472 [BLLDNG2 19.000] [1]]
CHNL# 45: [POWER190456 [LEPRG1 26.000] [1]]
CHNL# 44: [POWER190450 [MACTG1 13.800] [1]]
CHNL# 42: [POWER126652 [RAV 3 22.000] [1]]
CHNL# 41: [POWER101063 [MYST G7 22.000] [1]]
CHNL# 40: [POWER100060 [MIS GT1 18.000] [1]]
TIME (SECONDS)
TUE, JAN 27 2009 15:53
"NE,NY,NB POWER"

NS WIND MV

NS WIND MW

"345KV VOLTAGE"

FREQUENCY HZ

2013 WINTER PEAK STORA 167, NS LOAD 2371
NS-NB=-200; NB-NE=300; CBX=543; ONI=773 ONS=863
3 PHASE FAULT ON L8001 AT ONSLOW
CLEARED IN 4.5 CYCLES: NO SPS
FILE: a09-3p_8001_67n-2013WP-NS-import-200.out
CHNL# 146: [VOLT199280 [TUSKET A138.00]]
CHNL# 145: [VOLT199193 [HHWAS 138.00]]
CHNL# 144: [VOLT199165 [TUFTCOVE138.00]]
CHNL# 143: [VOLT199138: [SPRNGHILL138.00]]
CHNL# 142: [VOLT199090 [SON-TREN138.00]]
CHNL# 141: [VOLT199051 [HASTINGS138.00]]
1.2000
0.70000
0.0
1.0000
2.0000
3.0000
4.0000
5.0000
6.0000
7.0000
8.0000
9.0000
10.000
TIME (SECONDS)
TUE, JAN 27 2009 15:53
138KV BUS VOLTS

2013 WINTER PEAK STORA 167, NS LOAD 2371
NS-NB=-200; NB-NE=300; CBX=543; ONI=773 ONS=863
3 PHASE FAULT ON L8001 AT ONSLOW
CLEARED IN 4.5 CYCLES: NO SPS
FILE: a09-3p_8001_67n-2013WP-NS-import-200.out
CHNL# 140: [VOLT199240 [BWATER A230.00]]
CHNL# 139: [VOLT199200 [BRUSHY 230.00]]
CHNL# 138: [VOLT199130 [ONSLOW 230.00]]
CHNL# 137: [VOLT199050 [HASTINGS230.00]]
CHNL# 136: [VOLT199044 [PT.ACONI230.00]]
CHNL# 135: [VOLT199000 [LINGAN 230.00]]
1.2000
0.70000
0.0
1.0000
2.0000
3.0000
4.0000
5.0000
6.0000
7.0000
8.0000
9.0000
10.000
TIME (SECONDS)
TUE, JAN 27 2009 15:53
230KV BUS VOLTS

2013 WINTER PEAK STORA 167, NS LOAD 2371
NS-NB=-200; NB-NE=300; CBX=543; ONI=773 ONS=863
3 PHASE FAULT ON L8001 AT ONSLOW
CLEARED IN 4.5 CYCLES: NO SPS
FILE: a09-3p_8001_67n-2013WP-NS-import-200.out
CHNL# 217: [L6533MW]
CHNL# 215: [L6503MW]
CHNL# 197: [L8003MW]
CHNL# 195: [L8004MW]
CHNL# 193: [L8001MW]
CHNL# 221: [L3001MW]
250.00
500.00
1000.0
0.0
-250.0
-1000.
0.0
1.0000
2.0000
3.0000
4.0000
5.0000
6.0000
7.0000
8.0000
9.0000
10.000
TIME (SECONDS)
TUE, JAN 27 2009 15:53
LINE FLOW MW

2013 WINTER PEAK STORA 167, NS LOAD 2371
NS-NB=-200; NB-NE=300; CBX=543; ONI=773 ONS=863
3 PHASE FAULT ON L8001 AT ONSLOW
CLEARED IN 4.5 CYCLES: NO SPS
FILE: a09-3p_8001_67n-2013WP-NS-import-200.out
CHNL# 154: [IR141-DIGBYH69.0 VOLTS]
CHNL# 153: [IR137-STATIG25.0 VOLTS]
CHNL# 152: [IR114-GLENDH138.0 VOLTS]
CHNL# 151: [IR84-DALHOHV230.0 VOLTS]
CHNL# 150: [IR82_NUTBHV69.0 VOLTS]
CHNL# 149: [IR45_AMHERTP138.0 VOLTS]
1.2000
0.70000
0.0
1.0000
2.0000
3.0000
4.0000
5.0000
6.0000
7.0000
8.0000
9.0000
10.000
TIME (SECONDS)
TUE, JAN 27 2009 15:53
WIND BUS VOLTS

2013 WINTER PEAK STORA 167, NS LOAD 2371
NS-NB=-200; NB-NE=300; CBX=543; ONI=773 ONS=863
3 PHASE FAULT ON L8001 AT ONSLOW WHILE IMPORTING
SPS CROSS-TRIPS L6513 NS UFLS
FILE: a09.1-3p_8001_67n-2013WP-NS-import-200.out
CHNL#S 20.4: [ANGL199169] [TUFTCV3 14.400] [3] [ANGL156661] [DARL G1 22.000] [1]
CHNL#S 17.4: [ANGL199086] [TRENTON613.800] [6] [ANGL156661] [DARL G1 22.000] [1]
CHNL#S 16.4: [ANGL199085] [TRENTN5 13.800] [5] [ANGL156661] [DARL G1 22.000] [1]
CHNL#S 15.4: [ANGL199061] [TMP1 STO13.800] [1] [ANGL156661] [DARL G1 22.000] [1]
CHNL#S 13.4: [ANGL199043] [ACONIG1 20.000] [1] [ANGL156661] [DARL G1 22.000] [1]
CHNL#S 11.4: [ANGL199001] [LINGAN1 14.400] [1] [ANGL156661] [DARL G1 22.000] [1]
THU, FEB 19 2009 17:06
TIME (SECONDS)
NS ANGLE

2013 WINTER PEAK STORA 167, NS LOAD 2371
NS-NB=-200; NB-NE=300; CBX=543; ONI=773 ONS=863
3 PHASE FAULT ON L8001 AT ONSLOW WHILE IMPORTING
SPS CROSS-TRIPS L6513 NS UFLS
FILE: a09.1-3p_8001_67n-2013WP-NS-import-200.out
CHNL#S 10.4: [ANGL190472] [BLLDNG2 19.000] [1] [ANGL156661] [DARL G1 22.000] [1]
CHNL#S 6.4: [ANGL190456] [LEPRG1 26.000] [1] [ANGL156661] [DARL G1 22.000] [1]
CHNL#S 5.4: [ANGL190450] [MACTG1 13.800] [1] [ANGL156661] [DARL G1 22.000] [1]
CHNL#S 3.4: [ANGL126652] [RAV 3 22.000] [1] [ANGL156661] [DARL G1 22.000] [1]
CHNL#S 2.4: [ANGL101063] [MYST G7 22.000] [1] [ANGL156661] [DARL G1 22.000] [1]
CHNL#S 1.4: [ANGL100060] [MIS GT1 18.000] [1] [ANGL156661] [DARL G1 22.000] [1]
THU, FEB 19 2009 17:06
TIME (SECONDS)
"NE,NY,NB ANGLE"

2013 WINTER PEAK STORA 167, NS LOAD 2371
NS-NB=-200; NB-NE=300; CBX=543; ONI=773 ONS=863
3 PHASE FAULT ON L8001 AT ONSLOW WHILE IMPORTING
SPS CROSS-TRIPS L6513 NS UFLS
FILE: a09.1-3p_8001_67n-2013WP-NS-import-200.out
CHNL# 59: [POWER199169] [TUFTCV3 14.400] [3] 0.0
CHNL# 56: [POWER199086] [TRENTON613.800] [6] 0.0
CHNL# 55: [POWER199085] [TRENTN5 13.800] [5] 0.0
CHNL# 54: [POWER199061] [TMP1 STO13.800] [1] -1.500
CHNL# 52: [POWER199043] [ACONIG1 20.000] [1] 0.0
CHNL# 50: [POWER199001] [LINGAN1 14.400] [1] 0.0
THU, FEB 19 2009 17:06
TIME (SECONDS)
NS MW

2013 WINTER PEAK STORA 167, NS LOAD 2371
NS-NB=-200; NB-NE=300; CBX=543; ONI=773 ONS=863
3 PHASE FAULT ON L8001 AT ONSLOW WHILE IMPORTING
SPS CROSS-TRIPS L6513 NS UFLS
FILE: a09.1-3p_8001_67n-2013WP-NS-import-200.out
CHNL# 49: [POWER190472] [BLLDNG2 19.000] [1] 0.0
CHNL# 45: [POWER190456] [LEPRG1 26.000] [1] 4.0000
CHNL# 44: [POWER190450] [MACTG1 13.800] [1] 0.0
CHNL# 42: [POWER126652] [RAV 3 22.000] [1] 0.0
CHNL# 41: [POWER101063] [MYST G7 22.000] [1] 1.0000
CHNL# 40: [POWER100060] [MIS GT1 18.000] [1] 2.0000
THU, FEB 19 2009 17:06
TIME (SECONDS)
"NE,NY,NB POWER"

2013 WINTER PEAK STORA 167, NS LOAD 2371
NS-NB=-200; NB-NE=300; CBX=543; ONI=773 ONS=863
3 PHASE FAULT ON L8001 AT ONSLOW WHILE IMPORTING
SPS CROSS-TRIPS L6513 NS UFLS
FILE: a09.1-3p_8001_67n-2013WP-NS-import-200.out
CHNL# 119: [VARS IR141-DIGBY]
CHNL# 118: [VARS IR137-STATIA]
CHNL# 117: [VARS IR114-GLENDHU]
CHNL# 116: [VARS IR84-DALHOUSIE]
CHNL# 115: [VARS IR82_NUTTBY]
CHNL# 114: [VARS IR45_AMHERST]
TIME (SECONDS)
THU, FEB 19 2009 17:06
NS WIND MV

2013 WINTER PEAK STORA 167, NS LOAD 2371
NS-NB=-200; NB-NE=300; CBX=543; ONI=773 ONS=863
3 PHASE FAULT ON L8001 AT ONSLOW WHILE IMPORTING
SPS CROSS-TRIPS L6513 NS UFLS
FILE: a09.1-3p_8001_67n-2013WP-NS-import-200.out
CHNL# 79: [POWER IR141-DIGBY]
CHNL# 78: [POWER IR137-STATIA]
CHNL# 77: [POWER IR114-GLENDHU]
CHNL# 76: [POWER IR84-DALHOUSIE]
CHNL# 75: [POWER IR82_NUTTBY]
CHNL# 74: [POWER IR45_AMHERST]
TIME (SECONDS)
THU, FEB 19 2009 17:06
NS WIND MW

2013 WINTER PEAK STORA 167, NS LOAD 2371
NS-NB=-200; NB-NE=300; CBX=543; ONI=773 ONS=863
3 PHASE FAULT ON L8001 AT ONSLOW WHILE IMPORTING
SPS CROSS-TRIPS L6513 NS UFLS
FILE: a09.1-3p_8001_67n-2013WP-NS-import-200.out
CHNL# 133: [VOLT199125 [ONSLOW 345.00]]
CHNL# 132: [VOLT199120 [HOPEWELL 345.00]]
CHNL# 131: [VOLT199045 [WOODBINE345.00]]
CHNL# 130: [VOLT190320 [SALBRY 345.00]]
CHNL# 128: [VOLT190004 [KESWICK 345.00]]
CHNL# 127: [VOLT 70002 [ORRINGTN345.00]]
TIME (SECONDS)
THU, FEB 19 2009 17:06
"345KV VOLTAGE"

2013 WINTER PEAK STORA 167, NS LOAD 2371
NS-NB=-200; NB-NE=300; CBX=543; ONI=773 ONS=863
3 PHASE FAULT ON L8001 AT ONSLOW WHILE IMPORTING
SPS CROSS-TRIPS L6513 NS UFLS
FILE: a09.1-3p_8001_67n-2013WP-NS-import-200.out
CHNL# 125: 60*(1+[FREQ199125 [ONSLOW 345.00]])
CHNL# 124: 60*(1+[FREQ199120 [HOPEWELL 345.00]])
CHNL# 123: 60*(1+[FREQ199045 [WOODBINE345.00]])
CHNL# 122: 60*(1+[FREQ190320 [SALBRY 345.00]])
CHNL# 121: 60*(1+[FREQ190197 [C.COVE 345.00]])
CHNL# 120: 60*(1+[FREQ 70002 [ORRINGTN345.00]])
TIME (SECONDS)
THU, FEB 19 2009 17:06
FREQUENCY HZ

2013 WINTER PEAK STORA 167, NS LOAD 2371
NS-NB=-200; NB-NE=300; CBX=543; ONI=773 ONS=863
3 PHASE FAULT ON L8001 AT ONSLOW WHILE IMPORTING
SPS CROSS-TRIPS L6513 NS UFLS
FILE: a09.1-3p_8001_67n-2013WP-NS-import-200.out
CHNL# 146: [VOLT199280 [TUSKET A138.00]]
CHNL# 145: [VOLT199193 [HHWAS 138.00]]
CHNL# 144: [VOLT199165 [TUFTCOVE138.00]]
CHNL# 143: [VOLT199138 [SPRNGHILL138.00]]
CHNL# 142: [VOLT199090 [50N-TREN138.00]]
CHNL# 141: [VOLT199051 [HASTINGS138.00]]
1.2000
0.70000
0.0
2.0000
4.0000
6.0000
8.0000
10.000
12.000
14.000
16.000
18.000
20.000
TIME (SECONDS)
THU, FEB 19 2009 17:06
138KV BUS VOLTS

2013 WINTER PEAK STORA 167, NS LOAD 2371
NS-NB=-200; NB-NE=300; CBX=543; ONI=773 ONS=863
3 PHASE FAULT ON L8001 AT ONSLOW WHILE IMPORTING
SPS CROSS-TRIPS L6513 NS UFLS
FILE: a09.1-3p_8001_67n-2013WP-NS-import-200.out
CHNL# 140: [VOLT199240 [BWATER A230.00]]
CHNL# 139: [VOLT199200 [BRUSHY 230.00]]
CHNL# 138: [VOLT199130 [ONSLOW 230.00]]
CHNL# 137: [VOLT199050 [HASTINGS230.00]]
CHNL# 136: [VOLT199044 [PT.ACONI230.00]]
CHNL# 135: [VOLT199000 [LINGAN 230.00]]
1.2000
0.70000
0.0
2.0000
4.0000
6.0000
8.0000
10.000
12.000
14.000
16.000
18.000
20.000
TIME (SECONDS)
THU, FEB 19 2009 17:06
230KV BUS VOLTS

2013 WINTER PEAK STORA 167, NS LOAD 2371
NS-NB=-200; NB-NE=300; CBX=543; ONI=773 ONS=863
3 PHASE FAULT ON L8001 AT ONSLOW WHILE IMPORTING
SPS CROSS-TRIPS L6513 NS UFLS
FILE: a09.1-3p_8001_67n-2013WP-NS-import-200.out
CHNL# 217: [L6513MW]
CHNL# 215: [L6503MW]
CHNL# 197: [L8003MW]
CHNL# 195: [L8004MW]
CHNL# 193: [L8001MW]
CHNL# 221: [L3001MW]
250.00
-250.0
500.00
0.0
1000.0
-1000.
0.0
2.0000
4.0000
6.0000
8.0000
10.000
12.000
14.000
16.000
18.000
20.000
TIME (SECONDS)
THU, FEB 19 2009 17:06
LINE FLOW MW

2013 WINTER PEAK STORA 167, NS LOAD 2371
NS-NB=-200; NB-NE=300; CBX=543; ONI=773 ONS=863
3 PHASE FAULT ON L8001 AT ONSLOW WHILE IMPORTING
SPS CROSS-TRIPS L6513 NS UFLS
FILE: a09.1-3p_8001_67n-2013WP-NS-import-200.out
CHNL# 154: [IR141-DIGBYH69.0 VOLTS]
CHNL# 153: [IR137-STATIG25.0 VOLTS]
CHNL# 152: [IR114-GLENDH138.0 VOLTS]
CHNL# 151: [IR84-DALHOHV230.0 VOLTS]
CHNL# 150: [IR82_NUTBHV69.0 VOLTS]
CHNL# 149: [IR45_ANHERTP138.0 VOLTS]
1.2000
0.70000
0.0
2.0000
4.0000
6.0000
8.0000
10.000
12.000
14.000
16.000
18.000
20.000
TIME (SECONDS)
THU, FEB 19 2009 17:06
WIND BUS VOLTS

2013 WINTER PEAK STORA 167, NS LOAD 2371
NS-NB=-200; NB-NE=300; CBX=543; ONI=773 ONS=863
3 PHASE FAULT ON L6503 AT TRENTON
CLEARED IN 5 CYCLES: NO SPS
FILE: a10-3p_6503_50n-2013WP-NS-import-200.out
CHNL#S 20.4: [ANGL199169 [TUFTCV3 14.400] [3]] [ANGL156661 [DARL G1 22.000] [1
CHNL#S 17.4: [ANGL199086 [TRENTON613.800] [6]] [ANGL156661 [DARL G1 22.000] [1
CHNL#S 16.4: [ANGL199085 [TRENTN5 13.800] [5]] [ANGL156661 [DARL G1 22.000] [1
CHNL#S 15.4: [ANGL199061 [TMP1 STO13.800] [1]] [ANGL156661 [DARL G1 22.000] [1
CHNL#S 13.4: [ANGL199043 [ACONIG1 20.000] [1]] [ANGL156661 [DARL G1 22.000] [1
CHNL#S 11.4: [ANGL199001 [LINGAN1 14.400] [1]] [ANGL156661 [DARL G1 22.000] [1
TIME (SECONDS)
TUE, JAN 27 2009 15:53
NS ANGLE

2013 WINTER PEAK STORA 167, NS LOAD 2371
NS-NB=-200; NB-NE=300; CBX=543; ONI=773 ONS=863
3 PHASE FAULT ON L6503 AT TRENTON
CLEARED IN 5 CYCLES: NO SPS
FILE: a10-3p_6503_50n-2013WP-NS-import-200.out
CHNL#S 10.4: [ANGL190472 [BLLDNG2 19.000] [1]] [ANGL156661 [DARL G1 22.000] [1
CHNL#S 6.4: [ANGL190456 [LEPRG1 26.000] [1]] [ANGL156661 [DARL G1 22.000] [1
CHNL#S 5.4: [ANGL190450 [MACTG1 13.800] [1]] [ANGL156661 [DARL G1 22.000] [1
CHNL#S 3.4: [ANGL126652 [RAV 3 22.000] [1]] [ANGL156661 [DARL G1 22.000] [1
CHNL#S 2.4: [ANGL101063 [MYST G7 22.000] [1]] [ANGL156661 [DARL G1 22.000] [1
CHNL#S 1.4: [ANGL100060 [MIS GT1 18.000] [1]] [ANGL156661 [DARL G1 22.000] [1
TIME (SECONDS)
TUE, JAN 27 2009 15:53
"NE,NY,NB ANGLE"

2013 WINTER PEAK STORA 167, NS LOAD 2371
NS-NB=-200; NB-NE=300; CBX=543; ONI=773 ONS=863
3 PHASE FAULT ON L6503 AT TRENTON
CLEARED IN 5 CYCLES: NO SPS
FILE: a10-3p_6503_50n-2013WP-NS-import-200.out
CHNL# 59: [POWR199169 [TUFTCV3 14.400] [3]]
CHNL# 56: [POWR199086 [TRENTON613.800] [6]]
CHNL# 55: [POWR199085 [TRENTN5 13.800] [5]]
CHNL# 54: [POWR199061 [TMP1 STO13.800] [1]]
CHNL# 52: [POWR199043 [ACONIG1 20.000] [1]]
CHNL# 50: [POWR199001 [LINGAN1 14.400] [1]]
TIME (SECONDS)
TUE, JAN 27 2009 15:53
NS MW

2013 WINTER PEAK STORA 167, NS LOAD 2371
NS-NB=-200; NB-NE=300; CBX=543; ONI=773 ONS=863
3 PHASE FAULT ON L6503 AT TRENTON
CLEARED IN 5 CYCLES: NO SPS
FILE: a10-3p_6503_50n-2013WP-NS-import-200.out
CHNL# 49: [POWER190472 [BLLDNG2 19.000] [1]]
CHNL# 45: [POWER190456 [LEPRG1 26.000] [1]]
CHNL# 44: [POWER190450 [MACTG1 13.800] [1]]
CHNL# 42: [POWER126652 [RAV 3 22.000] [1]]
CHNL# 41: [POWER101063 [MYST G7 22.000] [1]]
CHNL# 40: [POWER100060 [MIS GT1 18.000] [1]]
TIME (SECONDS)
TUE, JAN 27 2009 15:53
"NE,NY,NB POWER"

2013 WINTER PEAK STORA 167, NS LOAD 2371
NS-NB=-200; NB-NE=300; CBX=543; ONI=773 ONS=863
3 PHASE FAULT ON L6503 AT TRENTON
CLEARED IN 5 CYCLES: NO SPS
FILE: a10-3p_6503_50n-2013WP-NS-import-200.out
CHNL# 119: [VARS IR141-DIGBY]
CHNL# 118: [VARS IR137-STATIA]
CHNL# 117: [VARS IR114-GLENDHU]
CHNL# 116: [VARS IR84-DALHOUSIE]
CHNL# 115: [VARS IR82_NUTTBY]
CHNL# 114: [VARS IR45_AMHERST]
TIME (SECONDS)
TUE, JAN 27 2009 15:53
NS WIND MV

2013 WINTER PEAK STORA 167, NS LOAD 2371
NS-NB=-200; NB-NE=300; CBX=543; ONI=773 ONS=863
3 PHASE FAULT ON L6503 AT TRENTON
CLEARED IN 5 CYCLES: NO SPS
FILE: a10-3p_6503_50n-2013WP-NS-import-200.out
CHNL# 79: [POWER IR141-DIGBY]
CHNL# 78: [POWER IR137-STATIA]
CHNL# 77: [POWER IR114-GLENDHU]
CHNL# 76: [POWER IR84-DALHOUSIE]
CHNL# 75: [POWER IR82_NUTTBY]
CHNL# 74: [POWER IR45_AMHERST]
TIME (SECONDS)
TUE, JAN 27 2009 15:53
NS WIND MW

2013 WINTER PEAK STORA 167, NS LOAD 2371
NS-NB=-200; NB-NE=300; CBX=543; ONI=773 ONS=863
3 PHASE FAULT ON L6503 AT TRENTON
CLEARED IN 5 CYCLES: NO SPS
FILE: a10-3p_6503_50n-2013WP-NS-import-200.out
CHNL# 133: [VOLT199125 [ONSLOW 345.00]]
CHNL# 132: [VOLT199120 [HOPEWELL 345.00]]
CHNL# 131: [VOLT199045 [WOODBINE345.00]]
CHNL# 130: [VOLT190320 [SALBRY 345.00]]
CHNL# 128: [VOLT190004 [KESWICK 345.00]]
CHNL# 127: [VOLT 70002 [ORRINGTN345.00]]
TIME (SECONDS)
TUE, JAN 27 2009 15:53
"345KV VOLTAGE"

2013 WINTER PEAK STORA 167, NS LOAD 2371
NS-NB=-200; NB-NE=300; CBX=543; ONI=773 ONS=863
3 PHASE FAULT ON L6503 AT TRENTON
CLEARED IN 5 CYCLES: NO SPS
FILE: a10-3p_6503_50n-2013WP-NS-import-200.out
CHNL# 125: 60*(1+[FREQ199125 [ONSLOW 345.00]])
CHNL# 124: 60*(1+[FREQ199120 [HOPEWELL 345.00]])
CHNL# 123: 60*(1+[FREQ199045 [WOODBINE345.00]])
CHNL# 122: 60*(1+[FREQ190320 [SALBRY 345.00]])
CHNL# 121: 60*(1+[FREQ190197 [C.COVE 345.00]])
CHNL# 120: 60*(1+[FREQ 70002 [ORRINGTN345.00]])
TIME (SECONDS)
TUE, JAN 27 2009 15:53
FREQUENCY HZ

2013 WINTER PEAK STORA 167, NS LOAD 2371
NS-NB=-200; NB-NE=300; CBX=543; ONI=773 ONS=863
3 PHASE FAULT ON L6503 AT TRENTON
CLEARED IN 5 CYCLES: NO SPS
FILE: a10-3p_6503_50n-2013WP-NS-import-200.out
CHNL# 146: [VOLT199280 [TUSKET A138.00]]
CHNL# 145: [VOLT199193 [HHWAS 138.00]]
CHNL# 144: [VOLT199165 [TUFTCOVE138.00]]
CHNL# 143: [VOLT199135 [SPRNGHILL138.00]]
CHNL# 142: [VOLT199090 [50N-TREN138.00]]
CHNL# 141: [VOLT199051 [HASTINGS138.00]]
TIME (SECONDS)
TUE, JAN 27 2009 15:53
138KV BUS VOLTS

2013 WINTER PEAK STORA 167, NS LOAD 2371
NS-NB=-200; NB-NE=300; CBX=543; ONI=773 ONS=863
3 PHASE FAULT ON L6503 AT TRENTON
CLEARED IN 5 CYCLES: NO SPS
FILE: a10-3p_6503_50n-2013WP-NS-import-200.out
CHNL# 140: [VOLT199240 [BWATER A230.00]]
CHNL# 139: [VOLT199200 [BRUSHY 230.00]]
CHNL# 138: [VOLT199130 [ONSLOW 230.00]]
CHNL# 137: [VOLT199050 [HASTINGS230.00]]
CHNL# 136: [VOLT199044 [PT.ACONI230.00]]
CHNL# 135: [VOLT199000 [LINGAN 230.00]]
TIME (SECONDS)
TUE, JAN 27 2009 15:53
230KV BUS VOLTS

2013 WINTER PEAK STORA 167, NS LOAD 2371
NS-NB=-200; NB-NE=300; CBX=543; ONI=773 ONS=863
3 PHASE FAULT ON L6503 AT TRENTON
CLEARED IN 5 CYCLES: NO SPS
FILE: a10-3p_6503_50n-2013WP-NS-import-200.out
CHNL# 217: [L6533MW]
CHNL# 215: [L6503MW]
CHNL# 197: [L8003MW]
CHNL# 195: [L8004MW]
CHNL# 193: [L8001MW]
CHNL# 221: [L3001MW]
TIME (SECONDS)
TUE, JAN 27 2009 15:53
LINE FLOW MW

2013 WINTER PEAK STORA 167, NS LOAD 2371
NS-NB=-200; NB-NE=300; CBX=543; ONI=773 ONS=863
3 PHASE FAULT ON L6503 AT TRENTON
CLEARED IN 5 CYCLES: NO SPS
FILE: a10-3p_6503_50n-2013WP-NS-import-200.out
CHNL# 154: [IR141-DIGBYH69.0 VOLTS]
CHNL# 153: [IR137-STATIG25.0 VOLTS]
CHNL# 152: [IR114-GLENDH138.0 VOLTS]
CHNL# 151: [IR84-DALHOHV230.0 VOLTS]
CHNL# 150: [IR82_NUTBHV69.0 VOLTS]
CHNL# 149: [IR45_AMHERTP138.0 VOLTS]
TIME (SECONDS)
TUE, JAN 27 2009 15:53
WIND BUS VOLTS

2013 WINTER PEAK STORA 167, NS LOAD 2371
NS-NB=-200; NB-NE=300; CBX=543; ONI=773 ONS=863
3 PHASE FAULT ON T81 AT WOODBINE
CLEARED IN 4.5 CYCLES: NO SPS
FILE: a12-3p_79n-2013WP-NS-import-200.out
CHNL#S 20.4: [ANGL199169] [TUFTCV3 14.400] [3] [] [ANGL156661] [DARL G1 22.000] [1]
CHNL#S 17.4: [ANGL199086] [TRENTON613.800] [6] [] [ANGL156661] [DARL G1 22.000] [1]
CHNL#S 16.4: [ANGL199085] [TRENTN5 13.800] [5] [] [ANGL156661] [DARL G1 22.000] [1]
CHNL#S 15.4: [ANGL199061] [TMP1 STO13.800] [1] [] [ANGL156661] [DARL G1 22.000] [1]
CHNL#S 13.4: [ANGL199043] [ACONIG1 20.000] [1] [] [ANGL156661] [DARL G1 22.000] [1]
CHNL#S 11.4: [ANGL199001] [LINGAN1 14.400] [1] [] [ANGL156661] [DARL G1 22.000] [1]
TIME (SECONDS)
TUE, JAN 27 2009 15:53
NS ANGLE

2013 WINTER PEAK STORA 167, NS LOAD 2371
NS-NB=-200; NB-NE=300; CBX=543; ONI=773 ONS=863
3 PHASE FAULT ON T81 AT WOODBINE
CLEARED IN 4.5 CYCLES: NO SPS
FILE: a12-3p_79n-2013WP-NS-import-200.out
CHNL#S 10.4: [ANGL190472] [BLLDNG2 19.000] [1] [] [ANGL156661] [DARL G1 22.000] [1]
CHNL#S 6.4: [ANGL190456] [LEPRG1 26.000] [1] [] [ANGL156661] [DARL G1 22.000] [1]
CHNL#S 5.4: [ANGL190450] [MACTG1 13.800] [1] [] [ANGL156661] [DARL G1 22.000] [1]
CHNL#S 3.4: [ANGL126652] [RAV 3 22.000] [1] [] [ANGL156661] [DARL G1 22.000] [1]
CHNL#S 2.4: [ANGL101063] [MYST G7 22.000] [1] [] [ANGL156661] [DARL G1 22.000] [1]
CHNL#S 1.4: [ANGL100060] [MIS GT1 18.000] [1] [] [ANGL156661] [DARL G1 22.000] [1]
TIME (SECONDS)
TUE, JAN 27 2009 15:53
"NE,NY,NB ANGLE"

2013 WINTER PEAK STORA 167, NS LOAD 2371
NS-NB=-200; NB-NE=300; CBX=543; ONI=773 ONS=863
3 PHASE FAULT ON T81 AT WOODBINE
CLEARED IN 4.5 CYCLES: NO SPS
FILE: a12-3p_79n-2013WP-NS-import-200.out
CHNL# 59: [POWER199169] [TUFTCV3 14.400] [3] []
CHNL# 56: [POWER199086] [TRENTON613.800] [6] []
CHNL# 55: [POWER199085] [TRENTN5 13.800] [5] []
CHNL# 54: [POWER199061] [TMP1 STO13.800] [1] []
CHNL# 52: [POWER199043] [ACONIG1 20.000] [1] []
CHNL# 50: [POWER199001] [LINGAN1 14.400] [1] []
TIME (SECONDS)
TUE, JAN 27 2009 15:53
NS MW

2013 WINTER PEAK STORA 167, NS LOAD 2371
NS-NB=-200; NB-NE=300; CBX=543; ONI=773 ONS=863
3 PHASE FAULT ON T81 AT WOODBINE
CLEARED IN 4.5 CYCLES: NO SPS
FILE: a12-3p_79n-2013WP-NS-import-200.out
CHNL# 49: [POWER190472] [BLLDNG2 19.000] [1]
CHNL# 45: [POWER190456] [LEPRG1 26.000] [1]
CHNL# 44: [POWER190450] [MACTG1 13.800] [1]
CHNL# 42: [POWER126652] [RAV 3 22.000] [1]
CHNL# 41: [POWER101063] [MYST G7 22.000] [1]
CHNL# 40: [POWER100060] [MIS GT1 18.000] [1]
TIME (SECONDS)
TUE, JAN 27 2009 15:53
"NE,NY,NB POWER"

2013 WINTER PEAK STORA 167, NS LOAD 2371
NS-NB=-200; NB-NE=300; CBX=543; ONI=773 ONS=863
3 PHASE FAULT ON T81 AT WOODBINE
CLEARED IN 4.5 CYCLES: NO SPS
FILE: a12-3p_79n-2013WP-NS-import-200.out
CHNL# 119: [VARS IR141-DIGBY]
CHNL# 118: [VARS IR137-STATIA]
CHNL# 117: [VARS IR114-GLENDHU]
CHNL# 116: [VARS IR84-DALHOUSIE]
CHNL# 115: [VARS IR82_NUTTBY]
CHNL# 114: [VARS IR45_AMHERST]
TIME (SECONDS)
TUE, JAN 27 2009 15:53
NS WIND MV

2013 WINTER PEAK STORA 167, NS LOAD 2371
NS-NB=-200; NB-NE=300; CBX=543; ONI=773 ONS=863
3 PHASE FAULT ON T81 AT WOODBINE
CLEARED IN 4.5 CYCLES: NO SPS
FILE: a12-3p_79n-2013WP-NS-import-200.out
CHNL# 79: [POWER IR141-DIGBY]
CHNL# 78: [POWER IR137-STATIA]
CHNL# 77: [POWER IR114-GLENDHU]
CHNL# 76: [POWER IR84-DALHOUSIE]
CHNL# 75: [POWER IR82_NUTTBY]
CHNL# 74: [POWER IR45_AMHERST]
TIME (SECONDS)
TUE, JAN 27 2009 15:53
NS WIND MW

2013 WINTER PEAK STORA 167, NS LOAD 2371
NS-NB=-200; NB-NE=300; CBX=543; ONI=773 ONS=863
3 PHASE FAULT ON T81 AT WOODBINE
CLEARED IN 4.5 CYCLES: NO SPS
FILE: a12-3p_79n-2013WP-NS-import-200.out
CHNL# 133: [VOLT199125 [ONSLOW 345.00]]
CHNL# 132: [VOLT199120 [HOPEWELL 345.00]]
CHNL# 131: [VOLT199045 [WOODBINE345.00]]
CHNL# 130: [VOLT190320 [SALBRY 345.00]]
CHNL# 128: [VOLT190004 [KESWICK 345.00]]
CHNL# 127: [VOLT 70002 [ORRINGTN345.00]]
TIME (SECONDS)
TUE, JAN 27 2009 15:53
"345KV VOLTAGE"

2013 WINTER PEAK STORA 167, NS LOAD 2371
NS-NB=-200; NB-NE=300; CBX=543; ONI=773 ONS=863
3 PHASE FAULT ON T81 AT WOODBINE
CLEARED IN 4.5 CYCLES: NO SPS
FILE: a12-3p_79n-2013WP-NS-import-200.out
CHNL# 125: 60*(1+[FREQ199125 [ONSLOW 345.00]])
CHNL# 124: 60*(1+[FREQ199120 [HOPEWELL 345.00]])
CHNL# 123: 60*(1+[FREQ199045 [WOODBINE345.00]])
CHNL# 122: 60*(1+[FREQ190320 [SALBRY 345.00]])
CHNL# 121: 60*(1+[FREQ190197 [C.COVE 345.00]])
CHNL# 120: 60*(1+[FREQ 70002 [ORRINGTN345.00]])
TIME (SECONDS)
TUE, JAN 27 2009 15:53
FREQUENCY HZ

2013 WINTER PEAK STORA 167, NS LOAD 2371
NS-NB=-200; NB-NE=300; CBX=543; ONI=773 ONS=863
3 PHASE FAULT ON T81 AT WOODBINE
CLEARED IN 4.5 CYCLES: NO SPS
FILE: a12-3p_79n-2013WP-NS-import-200.out
CHNL# 146: [VOLT199280 [TUSKET A138.00]]
CHNL# 145: [VOLT199193 [HHWAS 138.00]]
CHNL# 144: [VOLT199165 [TUFTCOVE138.00]]
CHNL# 143: [VOLT199135 [SPRNGHILL138.00]]
CHNL# 142: [VOLT199090 [SON-TREN138.00]]
CHNL# 141: [VOLT199051 [HASTINGS138.00]]
1.2000
0.70000
0.0
1.0000
2.0000
3.0000
4.0000
5.0000
6.0000
7.0000
8.0000
9.0000
10.000
TIME (SECONDS)
TUE, JAN 27 2009 15:53
138KV BUS VOLTS

2013 WINTER PEAK STORA 167, NS LOAD 2371
NS-NB=-200; NB-NE=300; CBX=543; ONI=773 ONS=863
3 PHASE FAULT ON T81 AT WOODBINE
CLEARED IN 4.5 CYCLES: NO SPS
FILE: a12-3p_79n-2013WP-NS-import-200.out
CHNL# 140: [VOLT199240 [BWATER A230.00]]
CHNL# 139: [VOLT199200 [BRUSHY 230.00]]
CHNL# 138: [VOLT199130 [ONSLOW 230.00]]
CHNL# 137: [VOLT199050 [HASTINGS230.00]]
CHNL# 136: [VOLT199044 [PT.ACONI230.00]]
CHNL# 135: [VOLT199000 [LINGAN 230.00]]
1.2000
0.70000
0.0
1.0000
2.0000
3.0000
4.0000
5.0000
6.0000
7.0000
8.0000
9.0000
10.000
TIME (SECONDS)
TUE, JAN 27 2009 15:53
230KV BUS VOLTS

2013 WINTER PEAK STORA 167, NS LOAD 2371
NS-NB=-200; NB-NE=300; CBX=543; ONI=773 ONS=863
3 PHASE FAULT ON T81 AT WOODBINE
CLEARED IN 4.5 CYCLES: NO SPS
FILE: a12-3p_79n-2013WP-NS-import-200.out
CHNL# 217: [L6513MW]
CHNL# 215: [L6503MW]
CHNL# 197: [L8003MW]
CHNL# 195: [L8004MW]
CHNL# 193: [L8001MW]
CHNL# 221: [L3001MW]
250.00
-250.0
500.00
0.0
1000.0
-1000.
0.0
1.0000
2.0000
3.0000
4.0000
5.0000
6.0000
7.0000
8.0000
9.0000
10.000
TIME (SECONDS)
TUE, JAN 27 2009 15:53
LINE FLOW MW

2013 WINTER PEAK STORA 167, NS LOAD 2371
NS-NB=-200; NB-NE=300; CBX=543; ONI=773 ONS=863
3 PHASE FAULT ON T81 AT WOODBINE
CLEARED IN 4.5 CYCLES: NO SPS
FILE: a12-3p_79n-2013WP-NS-import-200.out
CHNL# 154: [IR141-DIGBYH69.0 VOLTS]
CHNL# 153: [IR137-STATIG25.0 VOLTS]
CHNL# 152: [IR114-GLENDH138.0 VOLTS]
CHNL# 151: [IR84-DALHOHV230.0 VOLTS]
CHNL# 150: [IR82 NUTBHV69.0 VOLTS]
CHNL# 149: [IR45 AMHERTP138.0 VOLTS]
1.2000
0.70000
0.0
1.0000
2.0000
3.0000
4.0000
5.0000
6.0000
7.0000
8.0000
9.0000
10.000
TIME (SECONDS)
TUE, JAN 27 2009 15:53
WIND BUS VOLTS

2013 WINTER PEAK STORA 167, NS LOAD 2371
NS-NB=-200; NB-NE=300; CBX=543; ONI=773 ONS=863
3 PHASE FAULT ON T81 AT WOODBINE
CLEARED IN 4.5 CYCLES: SPS DROPS LINGAN UNIT 2
FILE: a12s-3p_79n-2013WP-NS-import-200.out
CHNL#S 20.4: [ANGL199169 [TUFTCV3 14.400] [3]] [ANGL156661 [DARL G1 22.000] [1
CHNL#S 17.4: [ANGL199086 [TRENTON6613.800] [6]] [ANGL156661 [DARL G1 22.000] [1
CHNL#S 16.4: [ANGL199085 [TRENTN5 13.800] [5]] [ANGL156661 [DARL G1 22.000] [1
CHNL#S 15.4: [ANGL199061 [TMP1 STO13.800] [1]] [ANGL156661 [DARL G1 22.000] [1
CHNL#S 13.4: [ANGL199043 [ACONIG1 20.000] [1]] [ANGL156661 [DARL G1 22.000] [1
CHNL#S 11.4: [ANGL199001 [LINGAN1 14.400] [1]] [ANGL156661 [DARL G1 22.000] [1
TIME (SECONDS)
TUE, JAN 27 2009 15:53
NS ANGLE

2013 WINTER PEAK STORA 167, NS LOAD 2371
NS-NB=-200; NB-NE=300; CBX=543; ONI=773 ONS=863
3 PHASE FAULT ON T81 AT WOODBINE
CLEARED IN 4.5 CYCLES: SPS DROPS LINGAN UNIT 2
FILE: a12s-3p_79n-2013WP-NS-import-200.out
CHNL#S 10.4: [ANGL190472 [BLLDNG2 19.000] [1]] [ANGL156661 [DARL G1 22.000] [1
CHNL#S 6.4: [ANGL190456 [LEPRG1 26.000] [1]] [ANGL156661 [DARL G1 22.000] [1
CHNL#S 5.4: [ANGL190450 [MACTG1 13.800] [1]] [ANGL156661 [DARL G1 22.000] [1
CHNL#S 3.4: [ANGL126652 [RAV 3 22.000] [1]] [ANGL156661 [DARL G1 22.000] [1
CHNL#S 2.4: [ANGL101063 [MYST G7 22.000] [1]] [ANGL156661 [DARL G1 22.000] [1
CHNL#S 1.4: [ANGL100060 [MIS GT1 18.000] [1]] [ANGL156661 [DARL G1 22.000] [1
TIME (SECONDS)
TUE, JAN 27 2009 15:53
"NE,NY,NB ANGLE"

2013 WINTER PEAK STORA 167, NS LOAD 2371
NS-NB=-200; NB-NE=300; CBX=543; ONI=773 ONS=863
3 PHASE FAULT ON T81 AT WOODBINE
CLEARED IN 4.5 CYCLES: SPS DROPS LINGAN UNIT 2
FILE: a12s-3p_79n-2013WP-NS-import-200.out
CHNL# 59: [POWR199169 [TUFTCV3 14.400] [3]]
CHNL# 56: [POWR199086 [TRENTON6613.800] [6]]
CHNL# 55: [POWR199085 [TRENTN5 13.800] [5]]
CHNL# 54: [POWR199061 [TMP1 STO13.800] [1]]
CHNL# 52: [POWR199043 [ACONIG1 20.000] [1]]
CHNL# 50: [POWR199001 [LINGAN1 14.400] [1]]
TIME (SECONDS)
TUE, JAN 27 2009 15:53
NS MW

2013 WINTER PEAK STORA 167, NS LOAD 2371
NS-NB=-200; NB-NE=300; CBX=543; ONI=773 ONS=863
3 PHASE FAULT ON T81 AT WOODBINE
CLEARED IN 4.5 CYCLES: SPS DROPS LINGAN UNIT 2
FILE: a12s-3p_79n-2013WP-NS-import-200.out
CHNL# 49: [POWER190472 [BLLDNG2 19.000] [1]]
CHNL# 45: [POWER190456 [LEPRG1 26.000] [1]]
CHNL# 44: [POWER190450 [MACTG1 13.800] [1]]
CHNL# 42: [POWER126652 [RAV 3 22.000] [1]]
CHNL# 41: [POWER101063 [MYST G7 22.000] [1]]
CHNL# 40: [POWER100060 [MIS GT1 18.000] [1]]
TIME (SECONDS)
TUE, JAN 27 2009 15:53
"NE,NY,NB POWER"

NS WIND MV

NS WIND MW

"345KV VOLTAGE"

FREQUENCY HZ

2013 WINTER PEAK STORA 167, NS LOAD 2371
NS-NB=-200; NB-NE=300; CBX=543; ONI=773 ONS=863
3 PHASE FAULT ON T81 AT WOODBINE
CLEARED IN 4.5 CYCLES: SPS DROPS LINGAN UNIT 2
FILE: a12s-3p_79n-2013WP-NS-import-200.out
CHNL# 146: [VOLT199280 [TUSKET A138.00]]
CHNL# 145: [VOLT199193 [HHWAS 138.00]]
CHNL# 144: [VOLT199165 [TUFTCOVE138.00]]
CHNL# 143: [VOLT199135 [SPRNGHILL138.00]]
CHNL# 142: [VOLT199090 [50N-TREN138.00]]
CHNL# 141: [VOLT199051 [HASTINGS138.00]]
1.2000
0.70000
0.0
1.0000
2.0000
3.0000
4.0000
5.0000
6.0000
7.0000
8.0000
9.0000
10.000
TIME (SECONDS)
TUE, JAN 27 2009 15:53
138KV BUS VOLTS

2013 WINTER PEAK STORA 167, NS LOAD 2371
NS-NB=-200; NB-NE=300; CBX=543; ONI=773 ONS=863
3 PHASE FAULT ON T81 AT WOODBINE
CLEARED IN 4.5 CYCLES: SPS DROPS LINGAN UNIT 2
FILE: a12s-3p_79n-2013WP-NS-import-200.out
CHNL# 140: [VOLT199240 [BWATER A230.00]]
CHNL# 139: [VOLT199200 [BRUSHY 230.00]]
CHNL# 138: [VOLT199130 [ONSLOW 230.00]]
CHNL# 137: [VOLT199050 [HASTINGS230.00]]
CHNL# 136: [VOLT199044 [PT.ACONI230.00]]
CHNL# 135: [VOLT199000 [LINGAN 230.00]]
1.2000
0.70000
0.0
1.0000
2.0000
3.0000
4.0000
5.0000
6.0000
7.0000
8.0000
9.0000
10.000
TIME (SECONDS)
TUE, JAN 27 2009 15:53
230KV BUS VOLTS

2013 WINTER PEAK STORA 167, NS LOAD 2371
NS-NB=-200; NB-NE=300; CBX=543; ONI=773 ONS=863
3 PHASE FAULT ON T81 AT WOODBINE
CLEARED IN 4.5 CYCLES: SPS DROPS LINGAN UNIT 2
FILE: a12s-3p_79n-2013WP-NS-import-200.out
CHNL# 217: [L6533NWV]
CHNL# 215: [L6503MVI]
CHNL# 197: [L8003MVI]
CHNL# 195: [L8004MVI]
CHNL# 193: [L8001MVI]
CHNL# 221: [L3001MVI]
250.00
500.00
1000.0
0.0
-250.0
-1000.
0.0
1.0000
2.0000
3.0000
4.0000
5.0000
6.0000
7.0000
8.0000
9.0000
10.000
TIME (SECONDS)
TUE, JAN 27 2009 15:53
LINE FLOW MW

2013 WINTER PEAK STORA 167, NS LOAD 2371
NS-NB=-200; NB-NE=300; CBX=543; ONI=773 ONS=863
3 PHASE FAULT ON T81 AT WOODBINE
CLEARED IN 4.5 CYCLES: SPS DROPS LINGAN UNIT 2
FILE: a12s-3p_79n-2013WP-NS-import-200.out
CHNL# 154: [IR141-DIGBYH69.0 VOLTS]
CHNL# 153: [IR137-STATIG25.0 VOLTS]
CHNL# 152: [IR114-GLENDH138.0 VOLTS]
CHNL# 151: [IR84-DALHOHV230.0 VOLTS]
CHNL# 150: [IR82_NUTBHV69.0 VOLTS]
CHNL# 149: [IR45_AMHERTP138.0 VOLTS]
1.2000
0.70000
0.0
1.0000
2.0000
3.0000
4.0000
5.0000
6.0000
7.0000
8.0000
9.0000
10.000
TIME (SECONDS)
TUE, JAN 27 2009 15:53
WIND BUS VOLTS

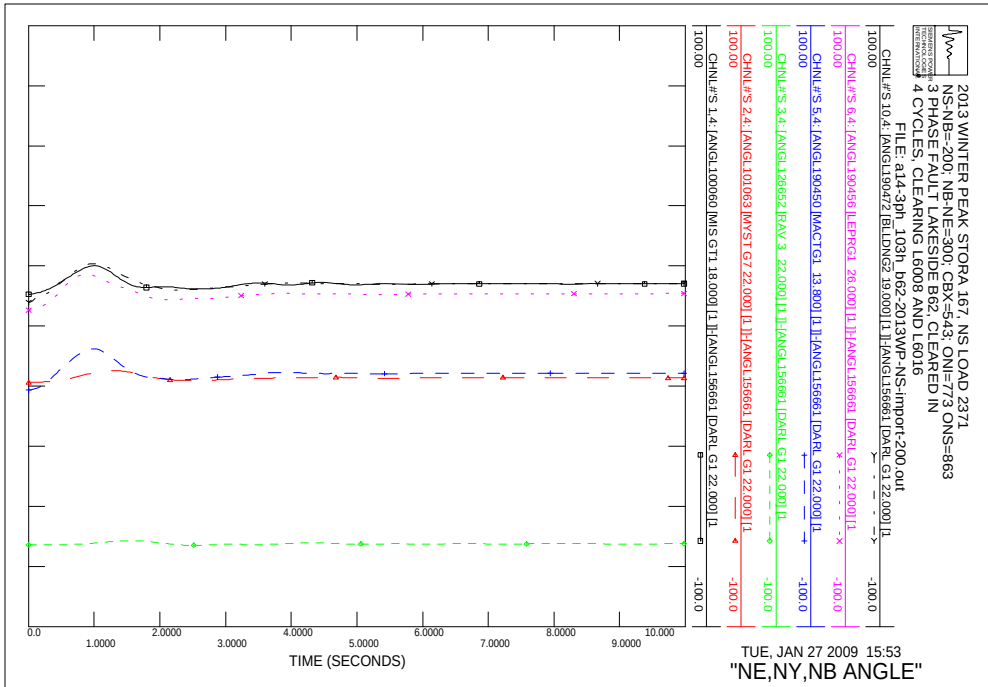
2013 WINTER PEAK STORA 167, NS LOAD 2371
NS-NB=-200; NB-NE=300; CBX=543; ONI=773 ONS=863
3 PHASE FAULT LAKESIDE B62, CLEARED IN
4 CYCLES, CLEARING L6008 AND L6016
FILE: a14-3ph_103h_b62-2013WP-NS-import-200.out
CHNL#'S 10,4: [ANGL190472 [BLLDNG2 19.000] [1]]-[ANGL156661 [DARL G1 22.000] [1
CHNL#'S 6,4: [ANGL190456 [LEPRG1 26.000] [1]]-[ANGL156661 [DARL G1 22.000] [1
CHNL#'S 5,4: [ANGL190450 [MACTG1 13.800] [1]]-[ANGL156661 [DARL G1 22.000] [1
CHNL#'S 3,4: [ANGL126652 [RAV 3 22.000] [1]]-[ANGL156661 [DARL G1 22.000] [1
CHNL#'S 2,4: [ANGL101063 [MYST G7 22.000] [1]]-[ANGL156661 [DARL G1 22.000] [1
CHNL#'S 1,4: [ANGL100060 [MIS GT1 18.000] [1]]-[ANGL156661 [DARL G1 22.000] [1
TIME (SECONDS)
TUE, JAN 27 2009 15:53
"NE,NY,NB ANGLE"

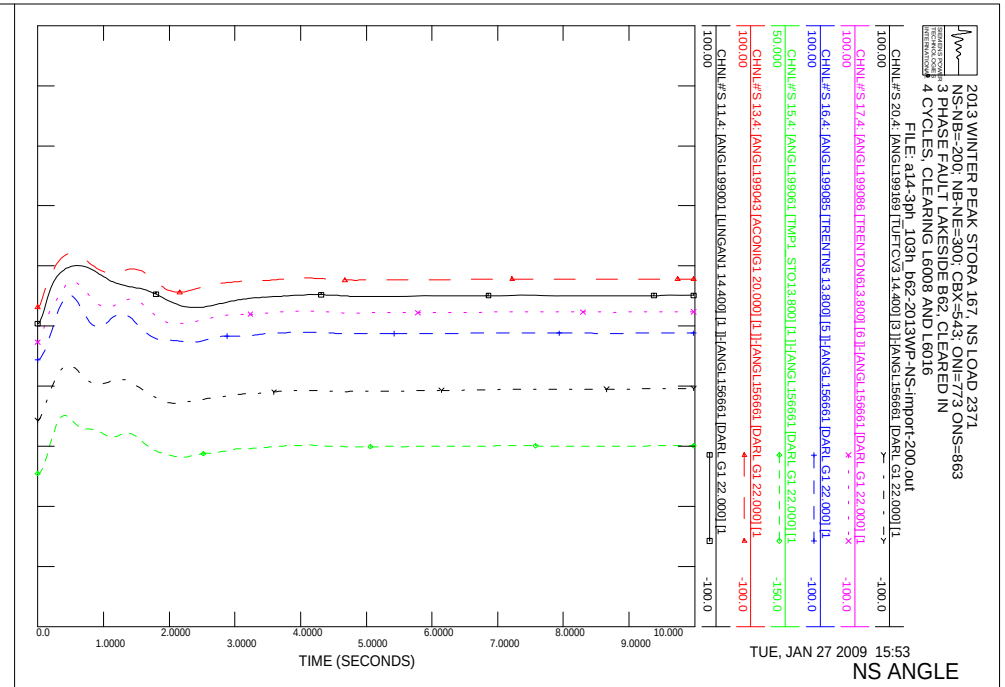
2013 WINTER PEAK STORA 167, NS LOAD 2371
NS-NB=-200; NB-NE=300; CBX=543; ONI=773 ONS=863
3 PHASE FAULT LAKESIDE B62, CLEARED IN
4 CYCLES, CLEARING L6008 AND L6016
FILE: a14-3ph_103h_b62-2013WP-NS-import-200.out
CHNL#'S 20,4: [ANGL199169 [TUFTCV3 14.400] [3]]-[ANGL156661 [DARL G1 22.000] [1
CHNL#'S 17,4: [ANGL199086 [TRENTON613.800] [6]]-[ANGL156661 [DARL G1 22.000] [1
CHNL#'S 16,4: [ANGL199085 [TRENTN5 13.800] [5]]-[ANGL156661 [DARL G1 22.000] [1
CHNL#'S 15,4: [ANGL199061 [TMP1 STO13.800] [1]]-[ANGL156661 [DARL G1 22.000] [1
CHNL#'S 13,4: [ANGL199043 [ACONIG1 20.000] [1]]-[ANGL156661 [DARL G1 22.000] [1
CHNL#'S 11,4: [ANGL199001 [LINGAN1 14.400] [1]]-[ANGL156661 [DARL G1 22.000] [1
TIME (SECONDS)
TUE, JAN 27 2009 15:53
NS ANGLE

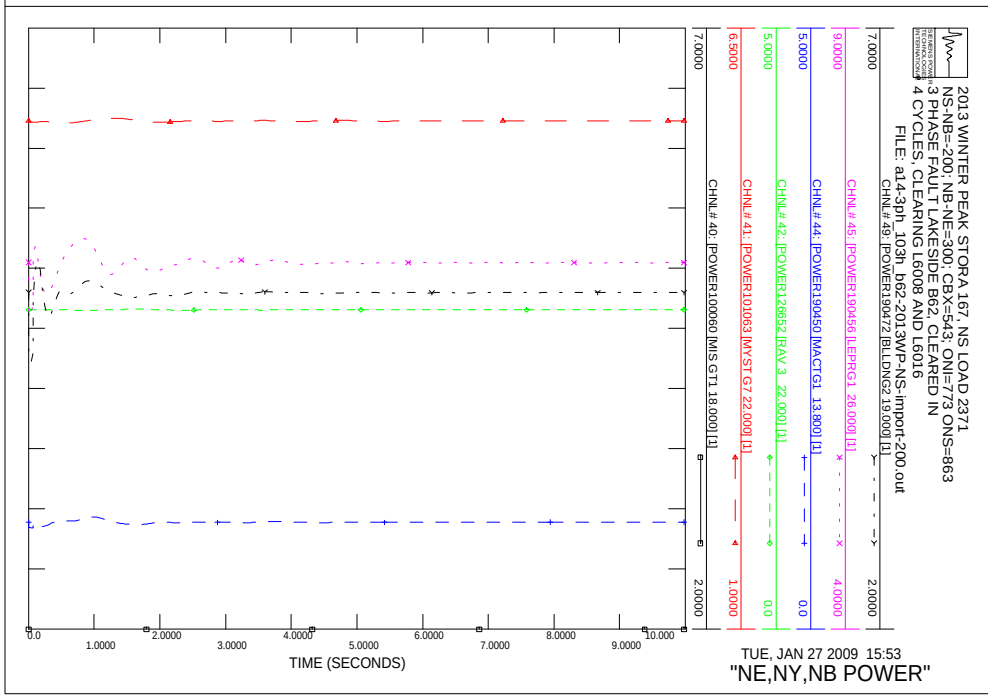
2013 WINTER PEAK STORA 167, NS LOAD 2371
NS-NB=-200; NB-NE=300; CBX=543; ONI=773 ONS=863
3 PHASE FAULT LAKESIDE B62, CLEARED IN
4 CYCLES, CLEARING L6008 AND L6016
FILE: a14-3ph_103h_b62-2013WP-NS-import-200.out
CHNL# 49: [POWER190472 [BLLDNG2 19.000] [1]]
CHNL# 45: [POWER190456 [LEPRG1 26.000] [1]]
CHNL# 44: [POWER190450 [MACTG1 13.800] [1]]
CHNL# 42: [POWER126652 [RAV 3 22.000] [1]]
CHNL# 41: [POWER101063 [MYST G7 22.000] [1]]
CHNL# 40: [POWER100060 [MIS GT1 18.000] [1]]
TIME (SECONDS)
TUE, JAN 27 2009 15:53
"NE,NY,NB POWER"

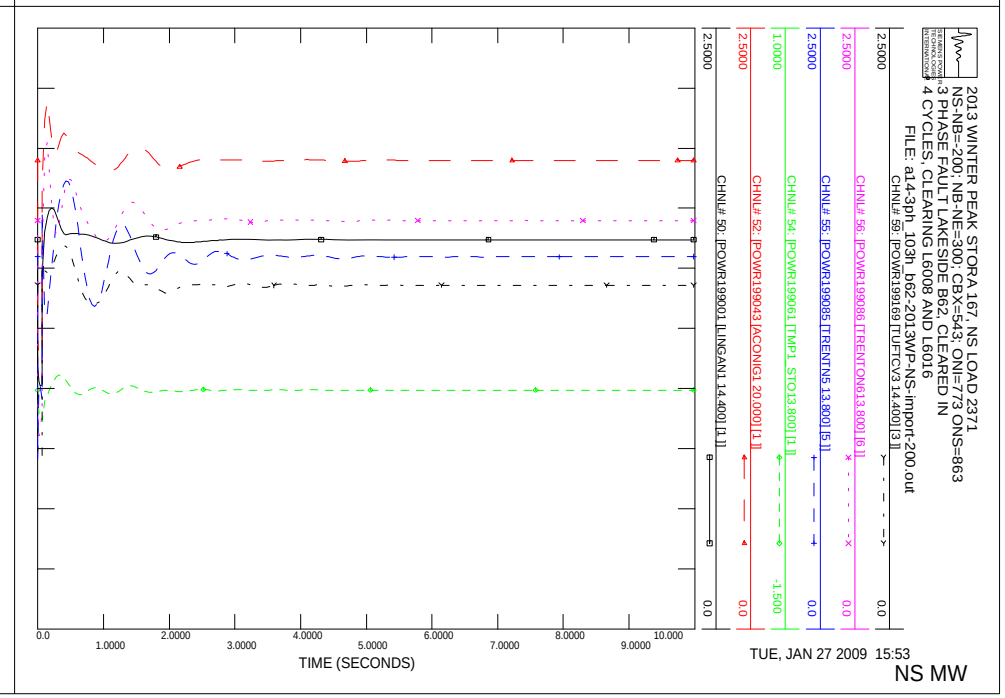
2013 WINTER PEAK STORA 167, NS LOAD 2371
NS-NB=-200; NB-NE=300; CBX=543; ONI=773 ONS=863
3 PHASE FAULT LAKESIDE B62, CLEARED IN
4 CYCLES, CLEARING L6008 AND L6016
FILE: a14-3ph_103h_b62-2013WP-NS-import-200.out
CHNL# 59: [POWR199169 [TUFTCV3 14.400] [3]]
CHNL# 56: [POWR199086 [TRENTON613.800] [6]]
CHNL# 55: [POWR199085 [TRENTN5 13.800] [5]]
CHNL# 54: [POWR199061 [TMP1 STO13.800] [1]]
CHNL# 52: [POWR199043 [ACONIG1 20.000] [1]]
CHNL# 50: [POWR199001 [LINGAN1 14.400] [1]]
TIME (SECONDS)
TUE, JAN 27 2009 15:53
NS MW

2013 WINTER PEAK STORA 167, NS LOAD 2371
NS-NB=-200; NB-NE=300; CBX=543; ONI=773 ONS=863
3 PHASE FAULT LAKESIDE B62, CLEARED IN
4 CYCLES, CLEARING L6008 AND L6016
FILE: a14-3ph_103h_b62-2013WP-NS-import-200.out
CHNL# 119: [VARS IR141-DIGBY]
CHNL# 118: [VARS IR137-STATIA]
CHNL# 117: [VARS IR114-GLENDHU]
CHNL# 116: [VARS IR84-DALHOUSIE]
CHNL# 115: [VARS IR82_NUTTBY]
CHNL# 114: [VARS IR45_AMHERST]
0.50000
-0.5000
0.0
1.0000
2.0000
3.0000
4.0000
5.0000
6.0000
7.0000
8.0000
9.0000
10.000
TIME (SECONDS)
TUE, JAN 27 2009 15:53
NS WIND MV

2013 WINTER PEAK STORA 167, NS LOAD 2371
NS-NB=-200; NB-NE=300; CBX=543; ONI=773 ONS=863
3 PHASE FAULT LAKESIDE B62, CLEARED IN
4 CYCLES, CLEARING L6008 AND L6016
FILE: a14-3ph_103h_b62-2013WP-NS-import-200.out
CHNL# 79: [POWER IR141-DIGBY]
CHNL# 78: [POWER IR137-STATIA]
CHNL# 77: [POWER IR114-GLENDHU]
CHNL# 76: [POWER IR84-DALHOUSIE]
CHNL# 75: [POWER IR82_NUTTBY]
CHNL# 74: [POWER IR45_AMHERST]
1.0000
0.0
0.0
1.0000
2.0000
3.0000
4.0000
5.0000
6.0000
7.0000
8.0000
9.0000
10.000
TIME (SECONDS)
TUE, JAN 27 2009 15:53
NS WIND MW

2013 WINTER PEAK STORA 167, NS LOAD 2371
NS-NB=-200; NB-NE=300; CBX=543; ONI=773 ONS=863
3 PHASE FAULT LAKESIDE B62, CLEARED IN
4 CYCLES, CLEARING L6008 AND L6016
FILE: a14-3ph_103h_b62-2013WP-NS-import-200.out
CHNL# 133: [VOLT199125 [ONSLOW 345.00]]
CHNL# 132: [VOLT199120 [HOPEWELL 345.00]]
CHNL# 131: [VOLT199045 [WOODBINE345.00]]
CHNL# 130: [VOLT190320 [SALBRY 345.00]]
CHNL# 128: [VOLT190004 [KESWICK 345.00]]
CHNL# 127: [VOLT 70002 [ORRINGTN345.00]]
1.1000
0.90000
0.0
1.0000
2.0000
3.0000
4.0000
5.0000
6.0000
7.0000
8.0000
9.0000
10.000
TIME (SECONDS)
TUE, JAN 27 2009 15:53
"345KV VOLTAGE"

2013 WINTER PEAK STORA 167, NS LOAD 2371
NS-NB=-200; NB-NE=300; CBX=543; ONI=773 ONS=863
3 PHASE FAULT LAKESIDE B62, CLEARED IN
4 CYCLES, CLEARING L6008 AND L6016
FILE: a14-3ph_103h_b62-2013WP-NS-import-200.out
CHNL# 125: 60*(1+[FREQ199125 [ONSLOW 345.00]])
CHNL# 124: 60*(1+[FREQ199120 [HOPEWELL 345.00]])
CHNL# 123: 60*(1+[FREQ199045 [WOODBINE345.00]])
CHNL# 122: 60*(1+[FREQ190320 [SALBRY 345.00]])
CHNL# 121: 60*(1+[FREQ190197 [C.COVE 345.00]])
CHNL# 120: 60*(1+[FREQ 70002 [ORRINGTN345.00]])
60.500
59.500
0.0
1.0000
2.0000
3.0000
4.0000
5.0000
6.0000
7.0000
8.0000
9.0000
10.000
TIME (SECONDS)
TUE, JAN 27 2009 15:53
FREQUENCY HZ

2013 WINTER PEAK STORA 167, NS LOAD 2371
NS-NB=-200; NB-NE=300; CBX=543; ONI=773 ONS=863
3 PHASE FAULT LAKESIDE B62, CLEARED IN
4 CYCLES, CLEARING L6008 AND L6016
FILE: a14-3ph_103h_b62-2013WP-NS-import-200.out
CHNL# 146: [VOLT199280 [TUSKET A138.00]]
CHNL# 145: [VOLT199193 [HHWAS 138.00]]
CHNL# 144: [VOLT199165 [TUFTCOVE138.00]]
CHNL# 143: [VOLT199135 [SPRNGHILL138.00]]
CHNL# 142: [VOLT199090 [SON-TREN138.00]]
CHNL# 141: [VOLT199051 [HASTINGS138.00]]
1.2000
0.70000
0.0
1.0000
2.0000
3.0000
4.0000
5.0000
6.0000
7.0000
8.0000
9.0000
10.000
TIME (SECONDS)
TUE, JAN 27 2009 15:53
138KV BUS VOLTS

2013 WINTER PEAK STORA 167, NS LOAD 2371
NS-NB=-200; NB-NE=300; CBX=543; ONI=773 ONS=863
3 PHASE FAULT LAKESIDE B62, CLEARED IN
4 CYCLES, CLEARING L6008 AND L6016
FILE: a14-3ph_103h_b62-2013WP-NS-import-200.out
CHNL# 140: [VOLT199240 [BWATER A230.00]]
CHNL# 139: [VOLT199200 [BRUSHY 230.00]]
CHNL# 138: [VOLT199130 [ONSLOW 230.00]]
CHNL# 137: [VOLT199050 [HASTINGS230.00]]
CHNL# 136: [VOLT199044 [PT.ACONI230.00]]
CHNL# 135: [VOLT199000 [LINGAN 230.00]]
1.2000
0.70000
0.0
1.0000
2.0000
3.0000
4.0000
5.0000
6.0000
7.0000
8.0000
9.0000
10.000
TIME (SECONDS)
TUE, JAN 27 2009 15:53
230KV BUS VOLTS

2013 WINTER PEAK STORA 167, NS LOAD 2371
NS-NB=-200; NB-NE=300; CBX=543; ONI=773 ONS=863
3 PHASE FAULT LAKESIDE B62, CLEARED IN
4 CYCLES, CLEARING L6008 AND L6016
FILE: a14-3ph_103h_b62-2013WP-NS-import-200.out
CHNL# 217: [L6533MW]
CHNL# 215: [L6503MW]
CHNL# 197: [L8003MW]
CHNL# 195: [L8004MW]
CHNL# 193: [L8001MW]
CHNL# 221: [L3001MW]
250.00
-250.0
500.00
0.0
1000.0
-1000.
0.0
1.0000
2.0000
3.0000
4.0000
5.0000
6.0000
7.0000
8.0000
9.0000
10.000
TIME (SECONDS)
TUE, JAN 27 2009 15:53
LINE FLOW MW

2013 WINTER PEAK STORA 167, NS LOAD 2371
NS-NB=-200; NB-NE=300; CBX=543; ONI=773 ONS=863
3 PHASE FAULT LAKESIDE B62, CLEARED IN
4 CYCLES, CLEARING L6008 AND L6016
FILE: a14-3ph_103h_b62-2013WP-NS-import-200.out
CHNL# 154: [IR141-DIGBYH69.0 VOLTS]
CHNL# 153: [IR137-STATIG25.0 VOLTS]
CHNL# 152: [IR114-GLENDH138.0 VOLTS]
CHNL# 151: [IR84-DALHOHV230.0 VOLTS]
CHNL# 150: [IR82_NUTBHV69.0 VOLTS]
CHNL# 149: [IR45_AMHERTP138.0 VOLTS]
1.2000
0.70000
0.0
1.0000
2.0000
3.0000
4.0000
5.0000
6.0000
7.0000
8.0000
9.0000
10.000
TIME (SECONDS)
TUE, JAN 27 2009 15:53
WIND BUS VOLTS

2013 WINTER PEAK STORA 167, NS LOAD 2371
NS-NB=-200; NB-NE=300; CBX=543; ONI=773 ONS=863
FILE: a99.1-7004w_3ph_67N-2013WP-NS-import-200.out
CHNL#S 20.4: [ANGL199169 [TUFTCV3 14.400] [3]] [ANGL156661 [DARL G1 22.000] [1
CHNL#S 17.4: [ANGL199086 [TRENTON613.800] [6]] [ANGL156661 [DARL G1 22.000] [1
CHNL#S 16.4: [ANGL199085 [TRENTN5 13.800] [5]] [ANGL156661 [DARL G1 22.000] [1
CHNL#S 15.4: [ANGL199061 [TMP1 STO13.800] [1]] [ANGL156661 [DARL G1 22.000] [1
CHNL#S 13.4: [ANGL199043 [ACONIG1 20.000] [1]] [ANGL156661 [DARL G1 22.000] [1
CHNL#S 11.4: [ANGL199001 [LINGAN1 14.400] [1]] [ANGL156661 [DARL G1 22.000] [1
TIME (SECONDS)
TUE, FEB 17 2009 10:17
NS ANGLE

2013 WINTER PEAK STORA 167, NS LOAD 2371
NS-NB=-200; NB-NE=300; CBX=543; ONI=773 ONS=863
FILE: a99.1-7004w_3ph_67N-2013WP-NS-import-200.out
CHNL#S 10.4: [ANGL190472 [BLLDNG2 19.000] [1]] [ANGL156661 [DARL G1 22.000] [1
CHNL#S 6.4: [ANGL190456 [LEPRG1 26.000] [1]] [ANGL156661 [DARL G1 22.000] [1
CHNL#S 5.4: [ANGL190450 [MACTG1 13.800] [1]] [ANGL156661 [DARL G1 22.000] [1
CHNL#S 3.4: [ANGL126652 [RAV 3 22.000] [1]] [ANGL156661 [DARL G1 22.000] [1
CHNL#S 2.4: [ANGL101063 [MYST G7 22.000] [1]] [ANGL156661 [DARL G1 22.000] [1
CHNL#S 1.4: [ANGL100060 [MIS GT1 18.000] [1]] [ANGL156661 [DARL G1 22.000] [1
TIME (SECONDS)
TUE, FEB 17 2009 10:17
"NE,NY,NB ANGLE"

2013 WINTER PEAK STORA 167, NS LOAD 2371
NS-NB=-200; NB-NE=300; CBX=543; ONI=773 ONS=863
FILE: a99.1-7004w_3ph_67N-2013WP-NS-import-200.out
CHNL# 59: [POWER199169 [TUFTCV3 14.400] [3]]
CHNL# 56: [POWER199086 [TRENTON613.800] [6]]
CHNL# 55: [POWER199085 [TRENTN5 13.800] [5]]
CHNL# 54: [POWER199061 [TMP1 STO13.800] [1]]
CHNL# 52: [POWER199043 [ACONIG1 20.000] [1]]
CHNL# 50: [POWER199001 [LINGAN1 14.400] [1]]
TIME (SECONDS)
TUE, FEB 17 2009 10:17
NS MW

2013 WINTER PEAK STORA 167, NS LOAD 2371
NS-NB=-200; NB-NE=300; CBX=543; ONI=773 ONS=863
FILE: a99.1-7004w_3ph_67N-2013WP-NS-import-200.out
CHNL# 49: [POWER190472 [BLLDNG2 19.000] [1]]
CHNL# 45: [POWER190456 [LEPRG1 26.000] [1]]
CHNL# 44: [POWER190450 [MACTG1 13.800] [1]]
CHNL# 42: [POWER126652 [RAV 3 22.000] [1]]
CHNL# 41: [POWER101063 [MYST G7 22.000] [1]]
CHNL# 40: [POWER100060 [MIS GT1 18.000] [1]]
TIME (SECONDS)
TUE, FEB 17 2009 10:17
"NE,NY,NB POWER"

2013 WINTER PEAK STORA 167, NS LOAD 2371
NS-NB=-200; NB-NE=300; CBX=543; ONI=773 ONS=863
FILE: a99.1-7004w_3ph_67N-2013WP-NS-import-200.out
CHNL# 119: [VARS IR141-DIGBY]
CHNL# 118: [VARS IR137-STATIA]
CHNL# 117: [VARS IR114-GLENDHU]
CHNL# 116: [VARS IR84-DALHOUSIE]
CHNL# 115: [VARS IR82_NUTTBY]
CHNL# 114: [VARS IR45_AMHERST]
0.50000
-0.5000
0.0
1.0000
2.0000
3.0000
4.0000
5.0000
6.0000
7.0000
8.0000
9.0000
10.000
TIME (SECONDS)
TUE, FEB 17 2009 10:17
NS WIND MV

2013 WINTER PEAK STORA 167, NS LOAD 2371
NS-NB=-200; NB-NE=300; CBX=543; ONI=773 ONS=863
FILE: a99.1-7004w_3ph_67N-2013WP-NS-import-200.out
CHNL# 79: [POWER IR141-DIGBY]
CHNL# 78: [POWER IR137-STATIA]
CHNL# 77: [POWER IR114-GLENDHU]
CHNL# 76: [POWER IR84-DALHOUSIE]
CHNL# 75: [POWER IR82_NUTTBY]
CHNL# 74: [POWER IR45_AMHERST]
1.0000
0.0
0.0
1.0000
2.0000
3.0000
4.0000
5.0000
6.0000
7.0000
8.0000
9.0000
10.000
TIME (SECONDS)
TUE, FEB 17 2009 10:17
NS WIND MW

2013 WINTER PEAK STORA 167, NS LOAD 2371
NS-NB=-200; NB-NE=300; CBX=543; ONI=773 ONS=863
FILE: a99.1-7004w_3ph_67N-2013WP-NS-import-200.out
CHNL# 133: [VOLT199125 [ONSLOW 345.00]]
CHNL# 132: [VOLT199120 [HOPEWELL 345.00]]
CHNL# 131: [VOLT199045 [WOODBINE345.00]]
CHNL# 130: [VOLT190320 [SALBRY 345.00]]
CHNL# 128: [VOLT190004 [KESWICK 345.00]]
CHNL# 127: [VOLT 70002 [ORRINGTN345.00]]
1.1000
0.90000
1.0000
2.0000
3.0000
4.0000
5.0000
6.0000
7.0000
8.0000
9.0000
10.000
TIME (SECONDS)
TUE, FEB 17 2009 10:17
"345KV VOLTAGE"

2013 WINTER PEAK STORA 167, NS LOAD 2371
NS-NB=-200; NB-NE=300; CBX=543; ONI=773 ONS=863
FILE: a99.1-7004w_3ph_67N-2013WP-NS-import-200.out
CHNL# 125: 60*(1+[FREQ199125 [ONSLOW 345.00]])
CHNL# 124: 60*(1+[FREQ199120 [HOPEWELL 345.00]])
CHNL# 123: 60*(1+[FREQ199045 [WOODBINE345.00]])
CHNL# 122: 60*(1+[FREQ190320 [SALBRY 345.00]])
CHNL# 121: 60*(1+[FREQ190197 [C.COVE 345.00]])
CHNL# 120: 60*(1+[FREQ 70002 [ORRINGTN345.00]])
60.500
59.500
1.0000
2.0000
3.0000
4.0000
5.0000
6.0000
7.0000
8.0000
9.0000
10.000
TIME (SECONDS)
TUE, FEB 17 2009 10:17
FREQUENCY HZ

2013 WINTER PEAK STORA 167, NS LOAD 2371
NS-NB=-200; NB-NE=300; CBX=543; ONI=773 ONS=863
FILE: a99.1-7004w_3ph_67N-2013WP-NS-import-200.out
CHNL# 146: [VOLT199280 [TUSKET A138.00]]
CHNL# 145: [VOLT199193 [HHWAS 138.00]]
CHNL# 144: [VOLT199165 [TUFTCOVE138.00]]
CHNL# 143: [VOLT199138 [SPRNGHILL138.00]]
CHNL# 142: [VOLT199090 [SON-TREN138.00]]
CHNL# 141: [VOLT199051 [HASTINGS138.00]]
TIME (SECONDS)
TUE, FEB 17 2009 10:17
138KV BUS VOLTS

2013 WINTER PEAK STORA 167, NS LOAD 2371
NS-NB=-200; NB-NE=300; CBX=543; ONI=773 ONS=863
FILE: a99.1-7004w_3ph_67N-2013WP-NS-import-200.out
CHNL# 140: [VOLT199240 [BWATER A230.00]]
CHNL# 139: [VOLT199200 [BRUSHY 230.00]]
CHNL# 138: [VOLT199130 [ONSLOW 230.00]]
CHNL# 137: [VOLT199050 [HASTINGS230.00]]
CHNL# 136: [VOLT199044 [PT.ACONI230.00]]
CHNL# 135: [VOLT199000 [LINGAN 230.00]]
TIME (SECONDS)
TUE, FEB 17 2009 10:17
230KV BUS VOLTS

2013 WINTER PEAK STORA 167, NS LOAD 2371
NS-NB=-200; NB-NE=300; CBX=543; ONI=773 ONS=863
FILE: a99.1-7004w_3ph_67N-2013WP-NS-import-200.out
CHNL# 217: [L6533NWV]
CHNL# 215: [L6503MVI]
CHNL# 197: [L8003MVI]
CHNL# 195: [L8004MVI]
CHNL# 193: [L8001MVI]
CHNL# 221: [L3001MVI]
TIME (SECONDS)
TUE, FEB 17 2009 10:17
LINE FLOW MW

2013 WINTER PEAK STORA 167, NS LOAD 2371
NS-NB=-200; NB-NE=300; CBX=543; ONI=773 ONS=863
FILE: a99.1-7004w_3ph_67N-2013WP-NS-import-200.out
CHNL# 154: [IR141-DIGBYH69.0 VOLTS]
CHNL# 153: [IR137-STATIG25.0 VOLTS]
CHNL# 152: [IR114-GLENDH138.0 VOLTS]
CHNL# 151: [IR84-DALHOHV230.0 VOLTS]
CHNL# 150: [IR82_NUTBHV69.0 VOLTS]
CHNL# 149: [IR45_AMHERTP138.0 VOLTS]
TIME (SECONDS)
TUE, FEB 17 2009 10:17
WIND BUS VOLTS

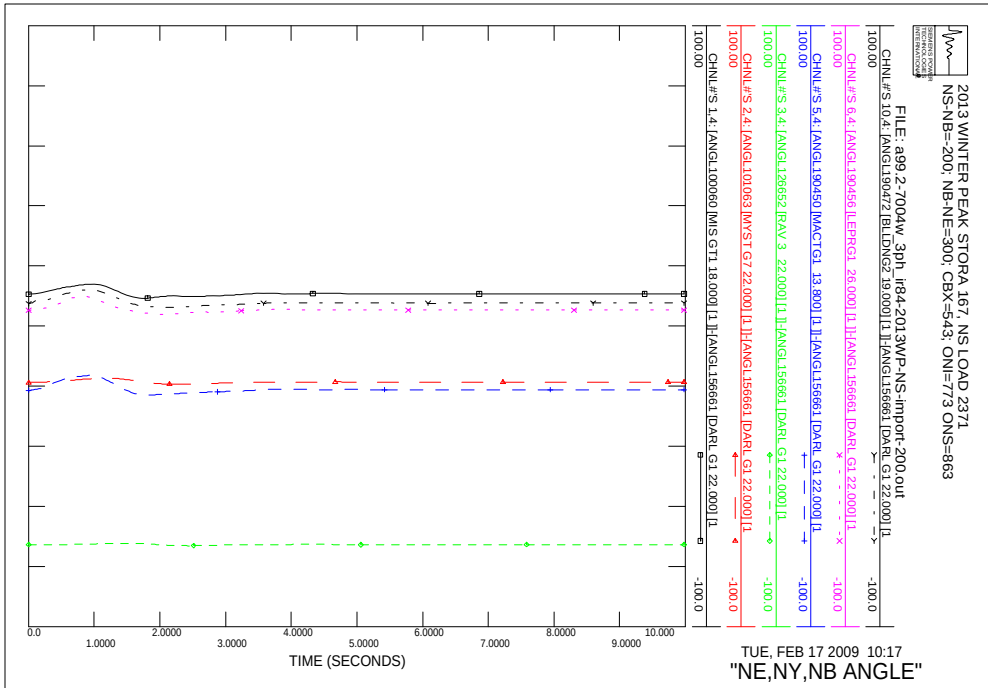
2013 WINTER PEAK STORA 167, NS LOAD 2371
NS-NB=-200; NB-NE=300; CBX=543; ONI=773 ONS=863
FILE: a99.2-7004w_3ph_ir84-2013WP-NS-import-200.out
CHNL#S 10,4: [ANGL190472 [BLLDNG2 19.000] [1]]-[ANGL156661 [DARL G1 22.000] [1
CHNL#S 6,4: [ANGL190456 [LEPRG1 26.000] [1]]-[ANGL156661 [DARL G1 22.000] [1
CHNL#S 5,4: [ANGL190450 [MACTG1 13.800] [1]]-[ANGL156661 [DARL G1 22.000] [1
CHNL#S 3,4: [ANGL126652 [RAV 3 22.000] [1]]-[ANGL156661 [DARL G1 22.000] [1
CHNL#S 2,4: [ANGL101063 [MYST G7 22.000] [1]]-[ANGL156661 [DARL G1 22.000] [1
CHNL#S 1,4: [ANGL100060 [MIS GT1 18.000] [1]]-[ANGL156661 [DARL G1 22.000] [1
TIME (SECONDS)
TUE, FEB 17 2009 10:17
"NE,NY,NB ANGLE"

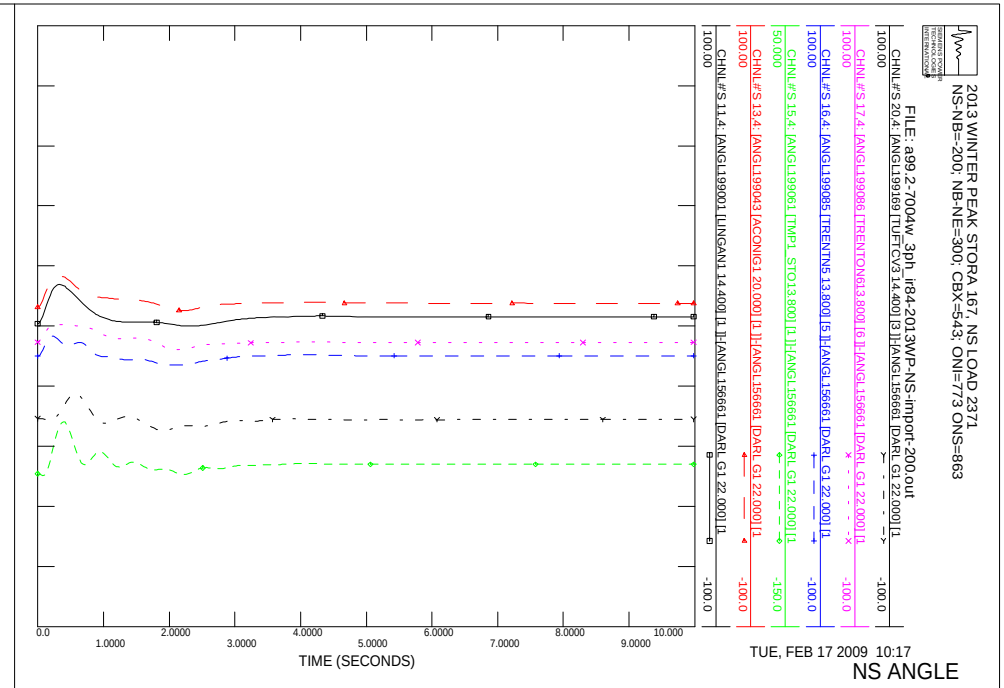
2013 WINTER PEAK STORA 167, NS LOAD 2371
NS-NB=-200; NB-NE=300; CBX=543; ONI=773 ONS=863
FILE: a99.2-7004w_3ph_ir84-2013WP-NS-import-200.out
CHNL#S 20,4: [ANGL199169 [TUFTCV3 14.400] [3]]-[ANGL156661 [DARL G1 22.000] [1
CHNL#S 17,4: [ANGL199086 [TRENTON613.800] [6]]-[ANGL156661 [DARL G1 22.000] [1
CHNL#S 16,4: [ANGL199085 [TRENTN5 13.800] [5]]-[ANGL156661 [DARL G1 22.000] [1
CHNL#S 15,4: [ANGL199061 [TMP1 STO13.800] [1]]-[ANGL156661 [DARL G1 22.000] [1
CHNL#S 13,4: [ANGL199043 [ACONIG1 20.000] [1]]-[ANGL156661 [DARL G1 22.000] [1
CHNL#S 11,4: [ANGL199001 [LINGAN1 14.400] [1]]-[ANGL156661 [DARL G1 22.000] [1
TIME (SECONDS)
TUE, FEB 17 2009 10:17
NS ANGLE

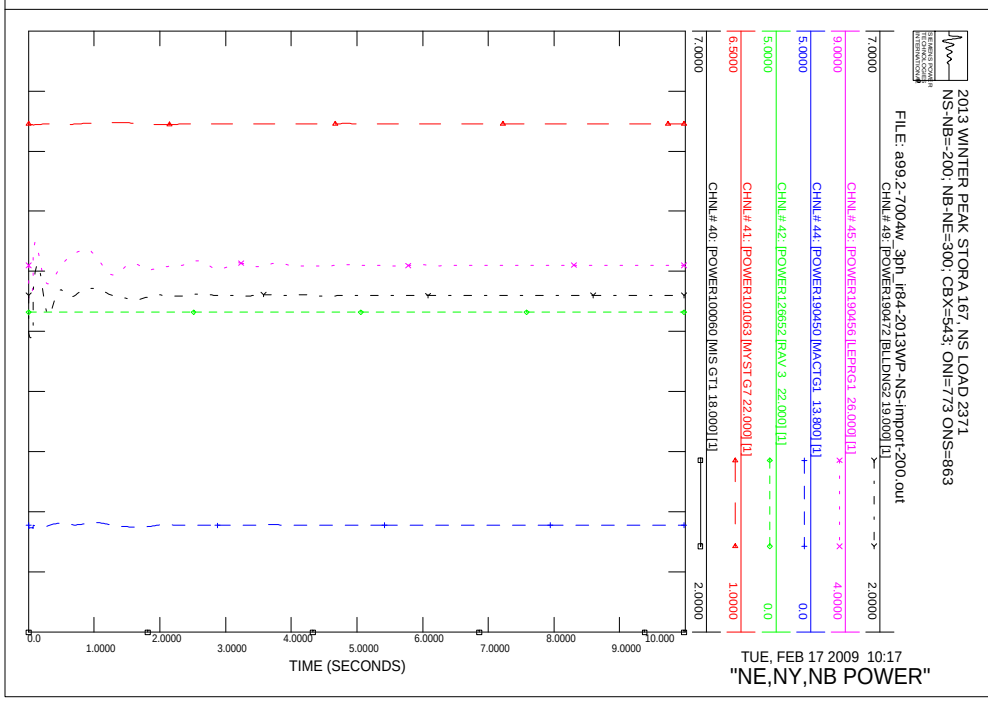
2013 WINTER PEAK STORA 167, NS LOAD 2371
NS-NB=-200; NB-NE=300; CBX=543; ONI=773 ONS=863
FILE: a99.2-7004w_3ph_ir84-2013WP-NS-import-200.out
CHNL# 49: [POWER190472 [BLLDNG2 19.000] [1]]
CHNL# 45: [POWER190456 [LEPRG1 26.000] [1]]
CHNL# 44: [POWER190450 [MACTG1 13.800] [1]]
CHNL# 42: [POWER126652 [RAV 3 22.000] [1]]
CHNL# 41: [POWER101063 [MYST G7 22.000] [1]]
CHNL# 40: [POWER100060 [MIS GT1 18.000] [1]]
TIME (SECONDS)
TUE, FEB 17 2009 10:17
"NE,NY,NB POWER"

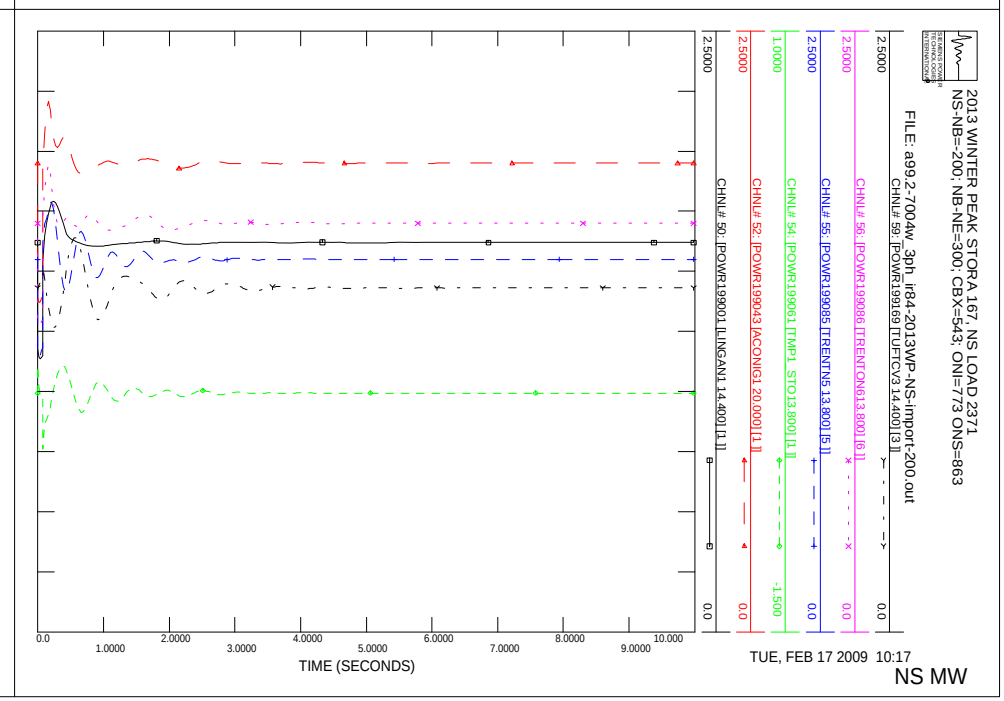
2013 WINTER PEAK STORA 167, NS LOAD 2371
NS-NB=-200; NB-NE=300; CBX=543; ONI=773 ONS=863
FILE: a99.2-7004w_3ph_ir84-2013WP-NS-import-200.out
CHNL# 59: [POWR199169 [TUFTCV3 14.400] [3]]
CHNL# 56: [POWR199086 [TRENTON613.800] [6]]
CHNL# 55: [POWR199085 [TRENTN5 13.800] [5]]
CHNL# 54: [POWR199061 [TMP1 STO13.800] [1]]
CHNL# 52: [POWR199043 [ACONIG1 20.000] [1]]
CHNL# 50: [POWR199001 [LINGAN1 14.400] [1]]
TIME (SECONDS)
TUE, FEB 17 2009 10:17
NS MW

2013 WINTER PEAK STORA 167, NS LOAD 2371
NS-NB=-200; NB-NE=300; CBX=543; ONI=773 ONS=863
FILE: a99.2-7004w_3ph_ir84-2013WP-NS-import-200.out
CHNL# 119: [VARS IR141-DIGBY]
CHNL# 118: [VARS IR137-STATIA]
CHNL# 117: [VARS IR114-GLENDHU]
CHNL# 116: [VARS IR84-DALHOUSIE]
CHNL# 115: [VARS IR82_NUTTBY]
CHNL# 114: [VARS IR45_AMHERST]
TIME (SECONDS)
TUE, FEB 17 2009 10:17
NS WIND MV

2013 WINTER PEAK STORA 167, NS LOAD 2371
NS-NB=-200; NB-NE=300; CBX=543; ONI=773 ONS=863
FILE: a99.2-7004w_3ph_ir84-2013WP-NS-import-200.out
CHNL# 79: [POWER IR141-DIGBY]
CHNL# 78: [POWER IR137-STATIA]
CHNL# 77: [POWER IR114-GLENDHU]
CHNL# 76: [POWER IR84-DALHOUSIE]
CHNL# 75: [POWER IR82_NUTTBY]
CHNL# 74: [POWER IR45_AMHERST]
TIME (SECONDS)
TUE, FEB 17 2009 10:17
NS WIND MW

2013 WINTER PEAK STORA 167, NS LOAD 2371
NS-NB=-200; NB-NE=300; CBX=543; ONI=773 ONS=863
FILE: a99.2-7004w_3ph_ir84-2013WP-NS-import-200.out
CHNL# 133: [VOLT199125 [ONSLOW 345.00]]
CHNL# 132: [VOLT199120 [HOPEWELL 345.00]]
CHNL# 131: [VOLT199045 [WOODBINE345.00]]
CHNL# 130: [VOLT190320 [SALBRY 345.00]]
CHNL# 128: [VOLT190004 [KESWICK 345.00]]
CHNL# 127: [VOLT 70002 [ORRINGTN345.00]]
TIME (SECONDS)
TUE, FEB 17 2009 10:17
"345KV VOLTAGE"

2013 WINTER PEAK STORA 167, NS LOAD 2371
NS-NB=-200; NB-NE=300; CBX=543; ONI=773 ONS=863
FILE: a99.2-7004w_3ph_ir84-2013WP-NS-import-200.out
CHNL# 125: 60*(1+[FREQ199125 [ONSLOW 345.00]])
CHNL# 124: 60*(1+[FREQ199120 [HOPEWELL 345.00]])
CHNL# 123: 60*(1+[FREQ199045 [WOODBINE345.00]])
CHNL# 122: 60*(1+[FREQ190320 [SALBRY 345.00]])
CHNL# 121: 60*(1+[FREQ190197 [C.COVE 345.00]])
CHNL# 120: 60*(1+[FREQ 70002 [ORRINGTN345.00]])
TIME (SECONDS)
TUE, FEB 17 2009 10:17
FREQUENCY HZ

2013 WINTER PEAK STORA 167, NS LOAD 2371
NS-NB=-200; NB-NE=300; CBX=543; ONI=773 ONS=863
FILE: a99.2-7004w_3ph_ir84-2013WP-NS-import-200.out
CHNL# 145: [VOLT199193 [HHWAS 138.00]]
CHNL# 144: [VOLT199165 [TUFTCOVE138.00]]
CHNL# 143: [VOLT199135 [SPRNGHILL138.00]]
CHNL# 142: [VOLT199090 [SON-TREN138.00]]
CHNL# 141: [VOLT199051 [HASTINGS138.00]]
CHNL# 146: [VOLT199280 [TUSKET A138.00]]
TIME (SECONDS)
TUE, FEB 17 2009 10:17
138KV BUS VOLTS

2013 WINTER PEAK STORA 167, NS LOAD 2371
NS-NB=-200; NB-NE=300; CBX=543; ONI=773 ONS=863
FILE: a99.2-7004w_3ph_ir84-2013WP-NS-import-200.out
CHNL# 139: [VOLT199200 [BRUSHY 230.00]]
CHNL# 138: [VOLT199130 [ONSLOW 230.00]]
CHNL# 137: [VOLT199050 [HASTINGS230.00]]
CHNL# 136: [VOLT199044 [PT.ACONI230.00]]
CHNL# 135: [VOLT199000 [LINGAN 230.00]]
CHNL# 140: [VOLT199240 [BWATER A230.00]]
TIME (SECONDS)
TUE, FEB 17 2009 10:17
230KV BUS VOLTS

2013 WINTER PEAK STORA 167, NS LOAD 2371
NS-NB=-200; NB-NE=300; CBX=543; ONI=773 ONS=863
FILE: a99.2-7004w_3ph_ir84-2013WP-NS-import-200.out
CHNL# 197: [L8003MW1]
CHNL# 195: [L8004MW1]
CHNL# 193: [L8001MW1]
CHNL# 221: [L3001MW1]
CHNL# 215: [L6503MW1]
CHNL# 217: [L6533MW1]
TIME (SECONDS)
TUE, FEB 17 2009 10:17
LINE FLOW MW

2013 WINTER PEAK STORA 167, NS LOAD 2371
NS-NB=-200; NB-NE=300; CBX=543; ONI=773 ONS=863
FILE: a99.2-7004w_3ph_ir84-2013WP-NS-import-200.out
CHNL# 152: [IR114-GLENDH138.0 VOLTS]
CHNL# 151: [IR84-DALHOHV230.0 VOLTS]
CHNL# 150: [IR82_NUTBHV69.0 VOLTS]
CHNL# 149: [IR45_AMHERTP138.0 VOLTS]
CHNL# 154: [IR141-DIGBYH69.0 VOLTS]
CHNL# 153: [IR137-STATIG25.0 VOLTS]
TIME (SECONDS)
TUE, FEB 17 2009 10:17
WIND BUS VOLTS

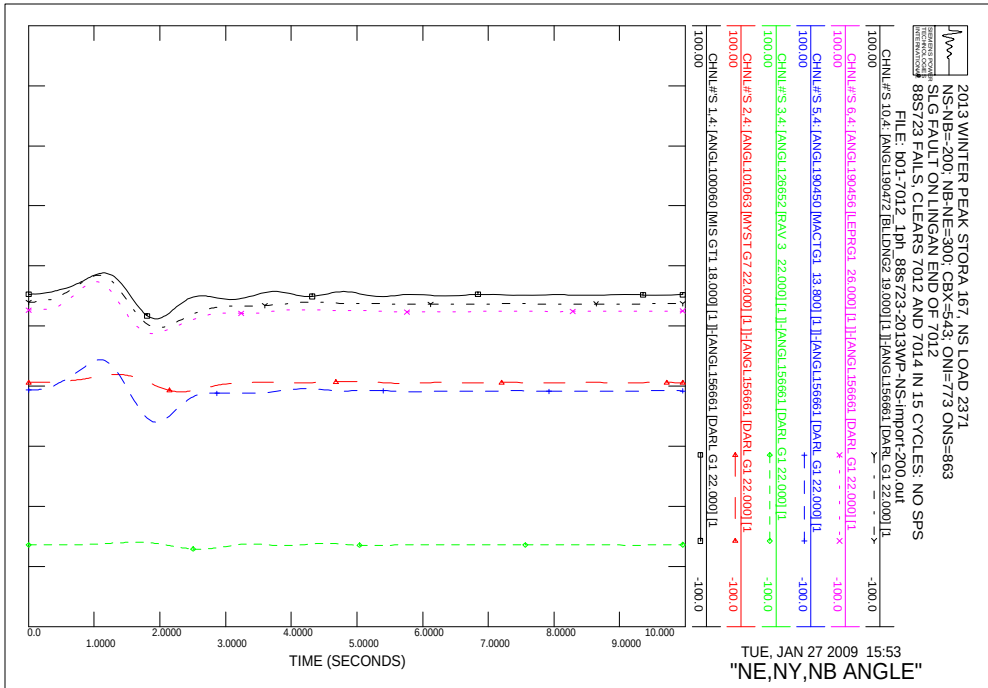
2013 WINTER PEAK STORA 167, NS LOAD 2371
NS-NB=-200; NB-NE=300; CBX=543; ONI=773 ONS=863
SLG FAULT ON LINGAN END OF 7012
88S723 FAILS, CLEARS 7012 AND 7014 IN 15 CYCLES: NO SPS
FILE: b01-7012_1ph_88s723-2013WP-NS-import-200.out
CHNL#'S 10,4: [ANGL190472 [BLLDNG2 19.000] [1]]-[ANGL156661 [DARL G1 22.000] [1
CHNL#'S 6,4: [ANGL190456 [LEPRG1 26.000] [1]]-[ANGL156661 [DARL G1 22.000] [1
CHNL#'S 5,4: [ANGL190450 [MACTG1 13.800] [1]]-[ANGL156661 [DARL G1 22.000] [1
CHNL#'S 3,4: [ANGL126652 [RAV 3 22.000] [1]]-[ANGL156661 [DARL G1 22.000] [1
CHNL#'S 2,4: [ANGL101063 [MYST G7 22.000] [1]]-[ANGL156661 [DARL G1 22.000] [1
CHNL#'S 1,4: [ANGL100060 [MIS GT1 18.000] [1]]-[ANGL156661 [DARL G1 22.000] [1
TIME (SECONDS)
TUE, JAN 27 2009 15:53
"NE,NY,NB ANGLE"

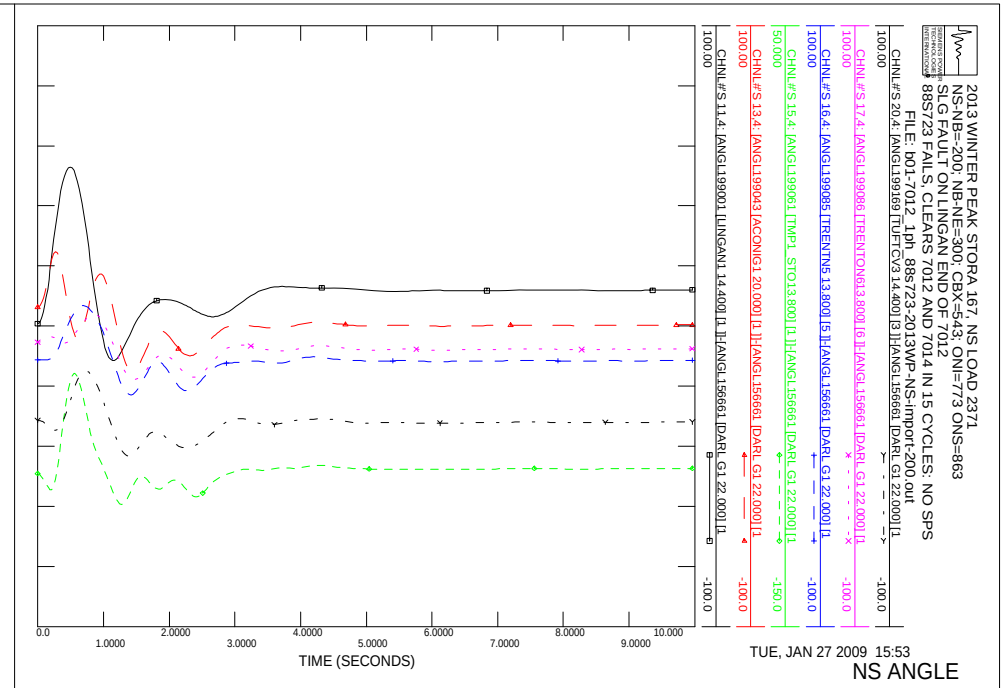
2013 WINTER PEAK STORA 167, NS LOAD 2371
NS-NB=-200; NB-NE=300; CBX=543; ONI=773 ONS=863
SLG FAULT ON LINGAN END OF 7012
88S723 FAILS, CLEARS 7012 AND 7014 IN 15 CYCLES: NO SPS
FILE: b01-7012_1ph_88s723-2013WP-NS-import-200.out
CHNL#'S 20,4: [ANGL199169 [TUFTCV3 14.400] [3]]-[ANGL156661 [DARL G1 22.000] [1
CHNL#'S 17,4: [ANGL199086 [TRENTON613.800] [6]]-[ANGL156661 [DARL G1 22.000] [1
CHNL#'S 16,4: [ANGL199085 [TRENTN5 13.800] [5]]-[ANGL156661 [DARL G1 22.000] [1
CHNL#'S 15,4: [ANGL199061 [TMP1 STO13.800] [1]]-[ANGL156661 [DARL G1 22.000] [1
CHNL#'S 13,4: [ANGL199043 [ACONIG1 20.000] [1]]-[ANGL156661 [DARL G1 22.000] [1
CHNL#'S 11,4: [ANGL199001 [LINGAN1 14.400] [1]]-[ANGL156661 [DARL G1 22.000] [1
TIME (SECONDS)
TUE, JAN 27 2009 15:53
NS ANGLE

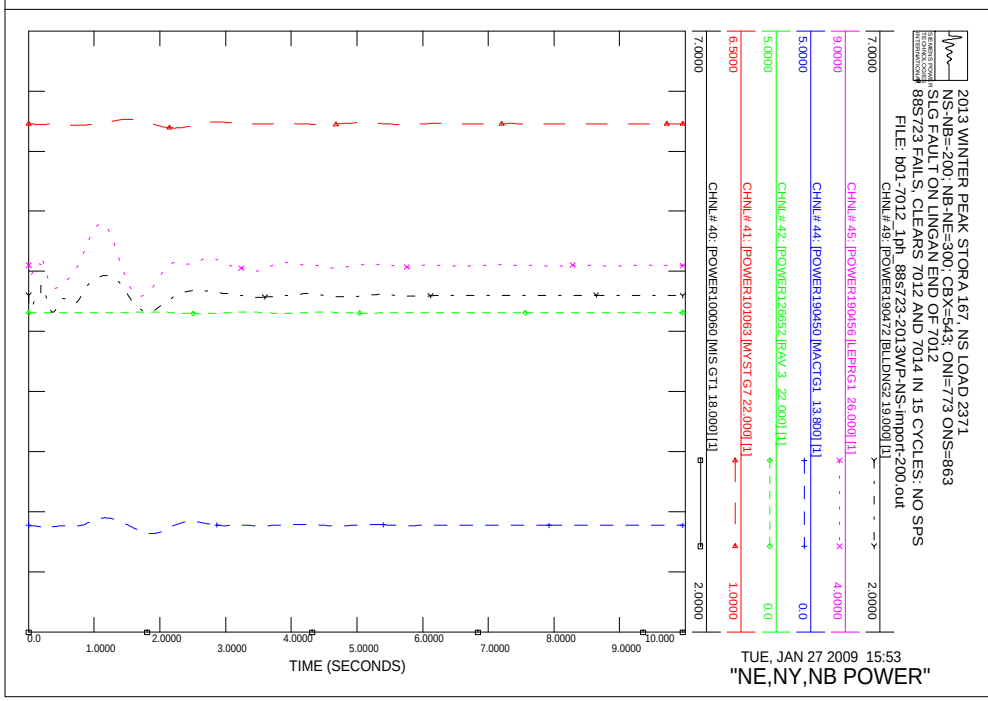
2013 WINTER PEAK STORA 167, NS LOAD 2371
NS-NB=-200; NB-NE=300; CBX=543; ONI=773 ONS=863
SLG FAULT ON LINGAN END OF 7012
88S723 FAILS, CLEARS 7012 AND 7014 IN 15 CYCLES: NO SPS
FILE: b01-7012_1ph_88s723-2013WP-NS-import-200.out
CHNL# 49: [POWER190472 [BLLDNG2 19.000] [1]]
CHNL# 45: [POWER190456 [LEPRG1 26.000] [1]]
CHNL# 44: [POWER190450 [MACTG1 13.800] [1]]
CHNL# 42: [POWER126652 [RAV 3 22.000] [1]]
CHNL# 41: [POWER101063 [MYST G7 22.000] [1]]
CHNL# 40: [POWER100060 [MIS GT1 18.000] [1]]
TIME (SECONDS)
TUE, JAN 27 2009 15:53
"NE,NY,NB POWER"

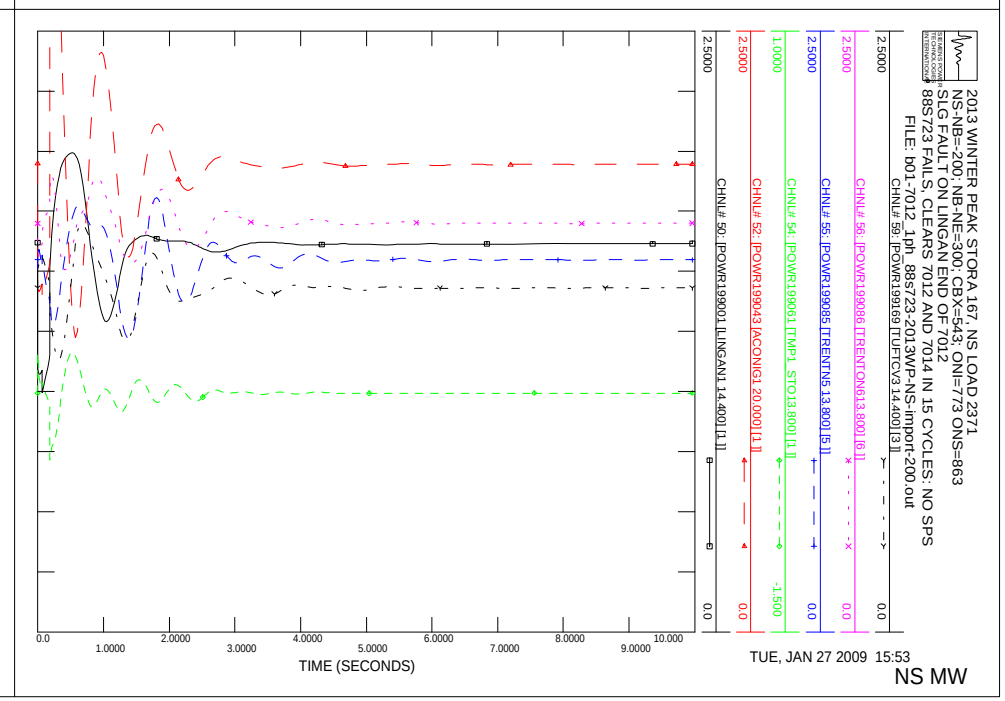
2013 WINTER PEAK STORA 167, NS LOAD 2371
NS-NB=-200; NB-NE=300; CBX=543; ONI=773 ONS=863
SLG FAULT ON LINGAN END OF 7012
88S723 FAILS, CLEARS 7012 AND 7014 IN 15 CYCLES: NO SPS
FILE: b01-7012_1ph_88s723-2013WP-NS-import-200.out
CHNL# 59: [POWR199169 [TUFTCV3 14.400] [3]]
CHNL# 56: [POWR199086 [TRENTON613.800] [6]]
CHNL# 55: [POWR199085 [TRENTN5 13.800] [5]]
CHNL# 54: [POWR199061 [TMP1 STO13.800] [1]]
CHNL# 52: [POWR199043 [ACONIG1 20.000] [1]]
CHNL# 50: [POWR199001 [LINGAN1 14.400] [1]]
TIME (SECONDS)
TUE, JAN 27 2009 15:53
NS MW

2013 WINTER PEAK STORA 167, NS LOAD 2371
NS-NB=-200; NB-NE=300; CBX=543; ONI=773 ONS=863
SLG FAULT ON LINGAN END OF 7012
88S723 FAILS, CLEARS 7012 AND 7014 IN 15 CYCLES: NO SPS
FILE: b01-7012_1ph_88s723-2013WP-NS-import-200.out
CHNL# 119: [VARS IR141-DIGBY]
CHNL# 118: [VARS IR137-STATIA]
CHNL# 117: [VARS IR114-GLENDHU]
CHNL# 116: [VARS IR84-DALHOUSIE]
CHNL# 115: [VARS IR82_NUTTBY]
CHNL# 114: [VARS IR45_AMHERST]
0.50000
-0.5000
0.0
1.0000
2.0000
3.0000
4.0000
5.0000
6.0000
7.0000
8.0000
9.0000
10.000
TIME (SECONDS)
TUE, JAN 27 2009 15:53
NS WIND MV

2013 WINTER PEAK STORA 167, NS LOAD 2371
NS-NB=-200; NB-NE=300; CBX=543; ONI=773 ONS=863
SLG FAULT ON LINGAN END OF 7012
88S723 FAILS, CLEARS 7012 AND 7014 IN 15 CYCLES: NO SPS
FILE: b01-7012_1ph_88s723-2013WP-NS-import-200.out
CHNL# 79: [POWER IR141-DIGBY]
CHNL# 78: [POWER IR137-STATIA]
CHNL# 77: [POWER IR114-GLENDHU]
CHNL# 76: [POWER IR84-DALHOUSIE]
CHNL# 75: [POWER IR82_NUTTBY]
CHNL# 74: [POWER IR45_AMHERST]
1.0000
0.0
0.0
1.0000
2.0000
3.0000
4.0000
5.0000
6.0000
7.0000
8.0000
9.0000
10.000
TIME (SECONDS)
TUE, JAN 27 2009 15:53
NS WIND MW

2013 WINTER PEAK STORA 167, NS LOAD 2371
NS-NB=-200; NB-NE=300; CBX=543; ONI=773 ONS=863
SLG FAULT ON LINGAN END OF 7012
88S723 FAILS, CLEARS 7012 AND 7014 IN 15 CYCLES: NO SPS
FILE: b01-7012_1ph_88s723-2013WP-NS-import-200.out
CHNL# 133: [VOLT199125 [ONSLOW 345.00]]
CHNL# 132: [VOLT199120 [HOPEWELL 345.00]]
CHNL# 131: [VOLT199045 [WOODBINE345.00]]
CHNL# 130: [VOLT190320 [SALBRY 345.00]]
CHNL# 128: [VOLT190004 [KESWICK 345.00]]
CHNL# 127: [VOLT 70002 [ORRINGTN345.00]]
1.1000
0.90000
0.0
1.0000
2.0000
3.0000
4.0000
5.0000
6.0000
7.0000
8.0000
9.0000
10.000
TIME (SECONDS)
TUE, JAN 27 2009 15:53
"345KV VOLTAGE"

2013 WINTER PEAK STORA 167, NS LOAD 2371
NS-NB=-200; NB-NE=300; CBX=543; ONI=773 ONS=863
SLG FAULT ON LINGAN END OF 7012
88S723 FAILS, CLEARS 7012 AND 7014 IN 15 CYCLES: NO SPS
FILE: b01-7012_1ph_88s723-2013WP-NS-import-200.out
CHNL# 125: 60*(1+[FREQ199125 [ONSLOW 345.00]])
CHNL# 124: 60*(1+[FREQ199120 [HOPEWELL 345.00]])
CHNL# 123: 60*(1+[FREQ199045 [WOODBINE345.00]])
CHNL# 122: 60*(1+[FREQ190320 [SALBRY 345.00]])
CHNL# 121: 60*(1+[FREQ190197 [C.COVE 345.00]])
CHNL# 120: 60*(1+[FREQ 70002 [ORRINGTN345.00]])
60.500
59.500
0.0
1.0000
2.0000
3.0000
4.0000
5.0000
6.0000
7.0000
8.0000
9.0000
10.000
TIME (SECONDS)
TUE, JAN 27 2009 15:53
FREQUENCY HZ

2013 WINTER PEAK STORA 167, NS LOAD 2371
NS-NB=-200; NB-NE=300; CBX=543; ONI=773 ONS=863
SLG FAULT ON LINGAN END OF 7012
88S723 FAILS, CLEARS 7012 AND 7014 IN 15 CYCLES: NO SPS
FILE: b01-7012_1ph_88s723-2013WP-NS-import-200.out
CHNL# 146: [VOLT199280 [TUSKET A138.00]]
CHNL# 145: [VOLT199193 [HHWAS 138.00]]
CHNL# 144: [VOLT199165 [TUFTCOVE138.00]]
CHNL# 143: [VOLT199138 [SPRNGHIL138.00]]
CHNL# 142: [VOLT199090 [50N-TREN138.00]]
CHNL# 141: [VOLT199051 [HASTINGS138.00]]
TIME (SECONDS)
TUE, JAN 27 2009 15:53
138KV BUS VOLTS

2013 WINTER PEAK STORA 167, NS LOAD 2371
NS-NB=-200; NB-NE=300; CBX=543; ONI=773 ONS=863
SLG FAULT ON LINGAN END OF 7012
88S723 FAILS, CLEARS 7012 AND 7014 IN 15 CYCLES: NO SPS
FILE: b01-7012_1ph_88s723-2013WP-NS-import-200.out
CHNL# 140: [VOLT199240 [BWATER A230.00]]
CHNL# 139: [VOLT199200 [BRUSHY 230.00]]
CHNL# 138: [VOLT199130 [ONSLOW 230.00]]
CHNL# 137: [VOLT199050 [HASTINGS230.00]]
CHNL# 136: [VOLT199044 [PT.ACONI230.00]]
CHNL# 135: [VOLT199000 [LINGAN 230.00]]
TIME (SECONDS)
TUE, JAN 27 2009 15:53
230KV BUS VOLTS

2013 WINTER PEAK STORA 167, NS LOAD 2371
NS-NB=-200; NB-NE=300; CBX=543; ONI=773 ONS=863
SLG FAULT ON LINGAN END OF 7012
88S723 FAILS, CLEARS 7012 AND 7014 IN 15 CYCLES: NO SPS
FILE: b01-7012_1ph_88s723-2013WP-NS-import-200.out
CHNL# 217: [L6533MW]
CHNL# 215: [L6503MW]
CHNL# 197: [L8003MW]
CHNL# 195: [L8004MW]
CHNL# 193: [L8001MW]
CHNL# 221: [L3001MW]
TIME (SECONDS)
TUE, JAN 27 2009 15:53
LINE FLOW MW

2013 WINTER PEAK STORA 167, NS LOAD 2371
NS-NB=-200; NB-NE=300; CBX=543; ONI=773 ONS=863
SLG FAULT ON LINGAN END OF 7012
88S723 FAILS, CLEARS 7012 AND 7014 IN 15 CYCLES: NO SPS
FILE: b01-7012_1ph_88s723-2013WP-NS-import-200.out
CHNL# 154: [IR141-DIGBYH69.0 VOLTS]
CHNL# 153: [IR137-STATIG25.0 VOLTS]
CHNL# 152: [IR114-GLENDH138.0 VOLTS]
CHNL# 151: [IR84-DALHOHV230.0 VOLTS]
CHNL# 150: [IR82_NUTBHV69.0 VOLTS]
CHNL# 149: [IR45_AMHERTP138.0 VOLTS]
TIME (SECONDS)
TUE, JAN 27 2009 15:53
WIND BUS VOLTS

2013 WINTER PEAK STORA 167, NS LOAD 2371
NS-NB=-200; NB-NE=300; CBX=543; ONI=773 ONS=863
SLG FAULT ON LINGAN END OF 7012
88S723 FAILS, CLEARS 7012 AND 7014 IN 15 CYCLES: SPS TRIPS U
FILE: b01s-7012_1ph_88s723-2013WP-NS-import-200.out
TIME (SECONDS)
TUE, JAN 27 2009 15:53
NS ANGLE

2013 WINTER PEAK STORA 167, NS LOAD 2371
NS-NB=-200; NB-NE=300; CBX=543; ONI=773 ONS=863
SLG FAULT ON LINGAN END OF 7012
88S723 FAILS, CLEARS 7012 AND 7014 IN 15 CYCLES: SPS TRIPS U
FILE: b01s-7012_1ph_88s723-2013WP-NS-import-200.out
TIME (SECONDS)
TUE, JAN 27 2009 15:53
"NE,NY,NB ANGLE"

2013 WINTER PEAK STORA 167, NS LOAD 2371
NS-NB=-200; NB-NE=300; CBX=543; ONI=773 ONS=863
SLG FAULT ON LINGAN END OF 7012
88S723 FAILS, CLEARS 7012 AND 7014 IN 15 CYCLES: SPS TRIPS U
FILE: b01s-7012_1ph_88s723-2013WP-NS-import-200.out
TIME (SECONDS)
TUE, JAN 27 2009 15:53
NS MW

2013 WINTER PEAK STORA 167, NS LOAD 2371
NS-NB=-200; NB-NE=300; CBX=543; ONI=773 ONS=863
SLG FAULT ON LINGAN END OF 7012
88S723 FAILS, CLEARS 7012 AND 7014 IN 15 CYCLES: SPS TRIPS U
FILE: b01s-7012_1ph_88s723-2013WP-NS-import-200.out
TIME (SECONDS)
TUE, JAN 27 2009 15:53
"NE,NY,NB POWER"

2013 WINTER PEAK STORA 167, NS LOAD 2371
NS-NB=-200; NB-NE=300; CBX=543; ONI=773 ONS=863
SLG FAULT ON LINGAN END OF 7012
88S723 FAILS, CLEARS 7012 AND 7014 IN 15 CYCLES: SPS TRIPS U
FILE: b01s-7012_1ph_88s723-2013WP-NS-import-200.out
CHNL# 119: [VARS IR141-DIGBY]
CHNL# 118: [VARS IR137-STATIA]
CHNL# 117: [VARS IR114-GLENDHU]
CHNL# 116: [VARS IR84-DALHOUSIE]
CHNL# 115: [VARS IR82_NUTTBY]
CHNL# 114: [VARS IR45_AMHERST]
0.50000
-0.5000
0.0
1.0000
2.0000
3.0000
4.0000
5.0000
6.0000
7.0000
8.0000
9.0000
10.000
TIME (SECONDS)
TUE, JAN 27 2009 15:53
NS WIND MV

2013 WINTER PEAK STORA 167, NS LOAD 2371
NS-NB=-200; NB-NE=300; CBX=543; ONI=773 ONS=863
SLG FAULT ON LINGAN END OF 7012
88S723 FAILS, CLEARS 7012 AND 7014 IN 15 CYCLES: SPS TRIPS U
FILE: b01s-7012_1ph_88s723-2013WP-NS-import-200.out
CHNL# 79: [POWER IR141-DIGBY]
CHNL# 78: [POWER IR137-STATIA]
CHNL# 77: [POWER IR114-GLENDHU]
CHNL# 76: [POWER IR84-DALHOUSIE]
CHNL# 75: [POWER IR82_NUTTBY]
CHNL# 74: [POWER IR45_AMHERST]
1.0000
0.0
1.0000
2.0000
3.0000
4.0000
5.0000
6.0000
7.0000
8.0000
9.0000
10.000
TIME (SECONDS)
TUE, JAN 27 2009 15:53
NS WIND MW

2013 WINTER PEAK STORA 167, NS LOAD 2371
NS-NB=-200; NB-NE=300; CBX=543; ONI=773 ONS=863
SLG FAULT ON LINGAN END OF 7012
88S723 FAILS, CLEARS 7012 AND 7014 IN 15 CYCLES: SPS TRIPS U
FILE: b01s-7012_1ph_88s723-2013WP-NS-import-200.out
CHNL# 133: [VOLT199125 IONSLOW 345.00]
CHNL# 132: [VOLT199120 IHOPEWELL345.00]
CHNL# 131: [VOLT199045 IWOODBINE345.00]
CHNL# 130: [VOLT190320 ISALBRY 345.00]
CHNL# 128: [VOLT190004 IKESWICK 345.00]
CHNL# 127: [VOLT 70002 IORRINGTN345.00]
1.1000
0.90000
0.0
1.0000
2.0000
3.0000
4.0000
5.0000
6.0000
7.0000
8.0000
9.0000
10.000
TIME (SECONDS)
TUE, JAN 27 2009 15:53
"345KV VOLTAGE"

2013 WINTER PEAK STORA 167, NS LOAD 2371
NS-NB=-200; NB-NE=300; CBX=543; ONI=773 ONS=863
SLG FAULT ON LINGAN END OF 7012
88S723 FAILS, CLEARS 7012 AND 7014 IN 15 CYCLES: SPS TRIPS U
FILE: b01s-7012_1ph_88s723-2013WP-NS-import-200.out
CHNL# 125: 60*(1+[FREQ199125 IONSLOW 345.00])
CHNL# 124: 60*(1+[FREQ199120 IHOPEWELL345.00])
CHNL# 123: 60*(1+[FREQ199045 IWOODBINE345.00])
CHNL# 122: 60*(1+[FREQ190320 ISALBRY 345.00])
CHNL# 121: 60*(1+[FREQ190197 IC.COVE 345.00])
CHNL# 120: 60*(1+[FREQ 70002 IORRINGTN345.00])
60.500
59.500
0.0
1.0000
2.0000
3.0000
4.0000
5.0000
6.0000
7.0000
8.0000
9.0000
10.000
TIME (SECONDS)
TUE, JAN 27 2009 15:53
FREQUENCY HZ

2013 WINTER PEAK STORA 167, NS LOAD 2371
NS-NB=-200; NB-NE=300; CBX=543; ONI=773 ONS=863
SLG FAULT ON LINGAN END OF 7012
88S723 FAILS, CLEARS 7012 AND 7014 IN 15 CYCLES: SPS TRIPS U
FILE: b01s-7012_1ph_88s723-2013WP-NS-import-200.out
CHNL# 146: [VOLT199280 [TUSKET A138.00]] 0.70000
CHNL# 145: [VOLT199193 [HHWAS 138.00]] 0.70000
CHNL# 144: [VOLT199165 [TUFTCOVE138.00]] 0.70000
CHNL# 143: [VOLT199138 [SPRNGHLL138.00]] 0.70000
CHNL# 142: [VOLT199090 [50N-TREN138.00]] 0.70000
CHNL# 141: [VOLT199051 [HASTINGS138.00]] 0.70000
TIME (SECONDS)
TUE, JAN 27 2009 15:53
138KV BUS VOLTS

2013 WINTER PEAK STORA 167, NS LOAD 2371
NS-NB=-200; NB-NE=300; CBX=543; ONI=773 ONS=863
SLG FAULT ON LINGAN END OF 7012
88S723 FAILS, CLEARS 7012 AND 7014 IN 15 CYCLES: SPS TRIPS U
FILE: b01s-7012_1ph_88s723-2013WP-NS-import-200.out
CHNL# 140: [VOLT199240 [BWATER A230.00]] 0.70000
CHNL# 139: [VOLT199200 [BRUSHY 230.00]] 0.70000
CHNL# 138: [VOLT199130 [ONSLOW 230.00]] 0.70000
CHNL# 137: [VOLT199050 [HASTINGS230.00]] 0.70000
CHNL# 136: [VOLT199044 [PT.ACONI230.00]] 0.70000
CHNL# 135: [VOLT199000 [LINGAN 230.00]] 0.70000
TIME (SECONDS)
TUE, JAN 27 2009 15:53
230KV BUS VOLTS

2013 WINTER PEAK STORA 167, NS LOAD 2371
NS-NB=-200; NB-NE=300; CBX=543; ONI=773 ONS=863
SLG FAULT ON LINGAN END OF 7012
88S723 FAILS, CLEARS 7012 AND 7014 IN 15 CYCLES: SPS TRIPS U
FILE: b01s-7012_1ph_88s723-2013WP-NS-import-200.out
CHNL# 217: [L6513NMW] -250.0
CHNL# 215: [L6503MW] 0.0
CHNL# 197: [L8003MW] 0.0
CHNL# 195: [L8004MW] 0.0
CHNL# 193: [L8001MW] -1000.
CHNL# 221: [L3001MW] -1000.
TIME (SECONDS)
TUE, JAN 27 2009 15:53
LINE FLOW MW

2013 WINTER PEAK STORA 167, NS LOAD 2371
NS-NB=-200; NB-NE=300; CBX=543; ONI=773 ONS=863
SLG FAULT ON LINGAN END OF 7012
88S723 FAILS, CLEARS 7012 AND 7014 IN 15 CYCLES: SPS TRIPS U
FILE: b01s-7012_1ph_88s723-2013WP-NS-import-200.out
CHNL# 154: [IR141-DIGBYH69.0 VOLTS] 0.70000
CHNL# 153: [IR137-STATIG25.0 VOLTS] 0.70000
CHNL# 152: [IR114-GLENDH138.0 VOLTS] 0.70000
CHNL# 151: [IR84-DALHOHV230.0 VOLTS] 0.70000
CHNL# 150: [IR82_NUTBHV69.0 VOLTS] 0.70000
CHNL# 149: [IR45_AMHERTP138.0 VOLTS] 0.70000
TIME (SECONDS)
TUE, JAN 27 2009 15:53
WIND BUS VOLTS

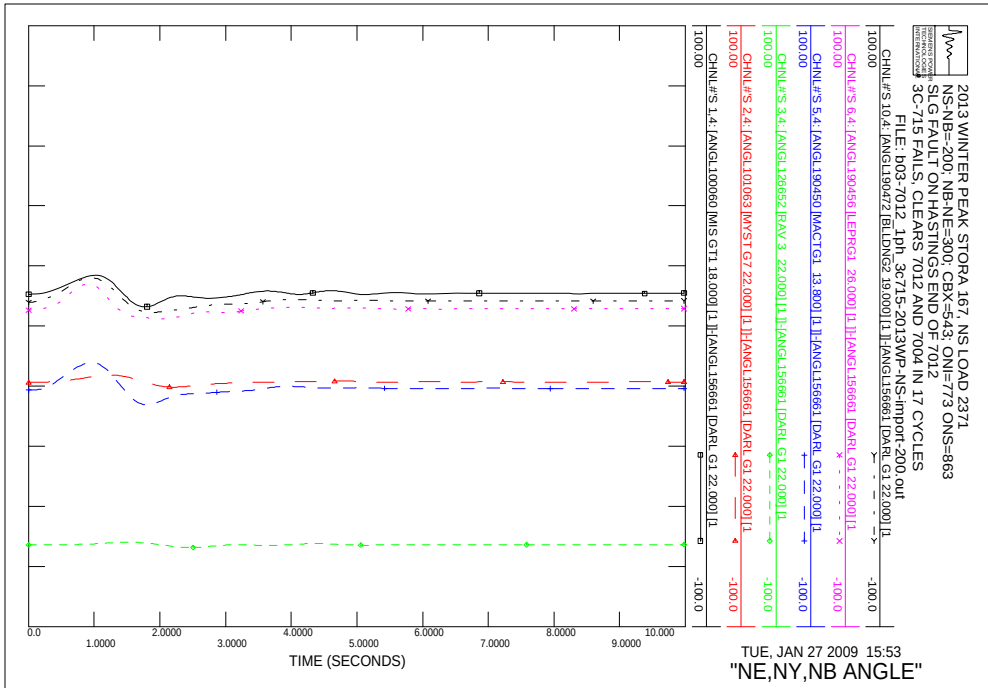
2013 WINTER PEAK STORA 167, NS LOAD 2371
NS-NB=-200; NB-NE=300; CBX=543; ONI=773 ONS=863
SLG FAULT ON HASTINGS END OF 7012
3C-715 FAILS, CLEARS 7012 AND 7004 IN 17 CYCLES
FILE: b03-7012_1ph_3c715-2013WP-NS-import-200.out
CHNL#S 10,4: [ANGL190472 [BLLDNG2 19.000] [1]]-[ANGL156661 [DARL G1 22.000] [1
CHNL#S 6,4: [ANGL190456 [LEPRG1 26.000] [1]]-[ANGL156661 [DARL G1 22.000] [1
CHNL#S 5,4: [ANGL190450 [MACTG1 13.800] [1]]-[ANGL156661 [DARL G1 22.000] [1
CHNL#S 3,4: [ANGL126652 [RAV 3 22.000] [1]]-[ANGL156661 [DARL G1 22.000] [1
CHNL#S 2,4: [ANGL101063 [MYST G7 22.000] [1]]-[ANGL156661 [DARL G1 22.000] [1
CHNL#S 1,4: [ANGL100060 [MIS GT1 18.000] [1]]-[ANGL156661 [DARL G1 22.000] [1
TIME (SECONDS)
TUE, JAN 27 2009 15:53
"NE,NY,NB ANGLE"

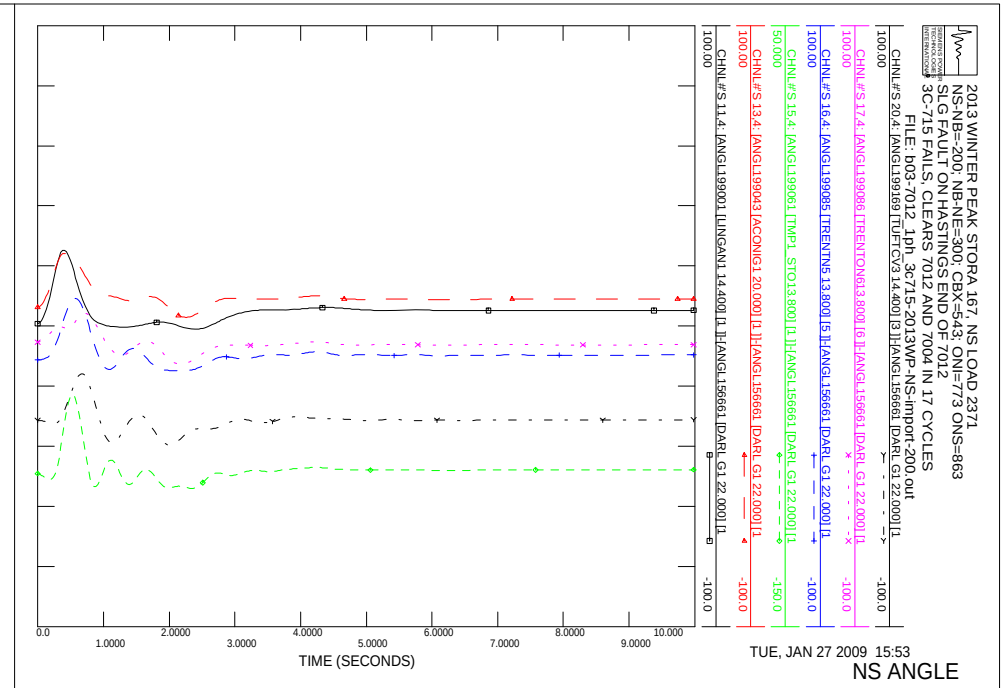
2013 WINTER PEAK STORA 167, NS LOAD 2371
NS-NB=-200; NB-NE=300; CBX=543; ONI=773 ONS=863
SLG FAULT ON HASTINGS END OF 7012
3C-715 FAILS, CLEARS 7012 AND 7004 IN 17 CYCLES
FILE: b03-7012_1ph_3c715-2013WP-NS-import-200.out
CHNL#S 20,4: [ANGL199169 [TUFTCV3 14.400] [3]]-[ANGL156661 [DARL G1 22.000] [1
CHNL#S 17,4: [ANGL199086 [TRENTON613.800] [6]]-[ANGL156661 [DARL G1 22.000] [1
CHNL#S 16,4: [ANGL199085 [TRENTN5 13.800] [5]]-[ANGL156661 [DARL G1 22.000] [1
CHNL#S 15,4: [ANGL199061 [TMP1 STO13.800] [1]]-[ANGL156661 [DARL G1 22.000] [1
CHNL#S 13,4: [ANGL199043 [ACONIG1 20.000] [1]]-[ANGL156661 [DARL G1 22.000] [1
CHNL#S 11,4: [ANGL199001 [LINGAN1 14.400] [1]]-[ANGL156661 [DARL G1 22.000] [1
TIME (SECONDS)
TUE, JAN 27 2009 15:53
NS ANGLE

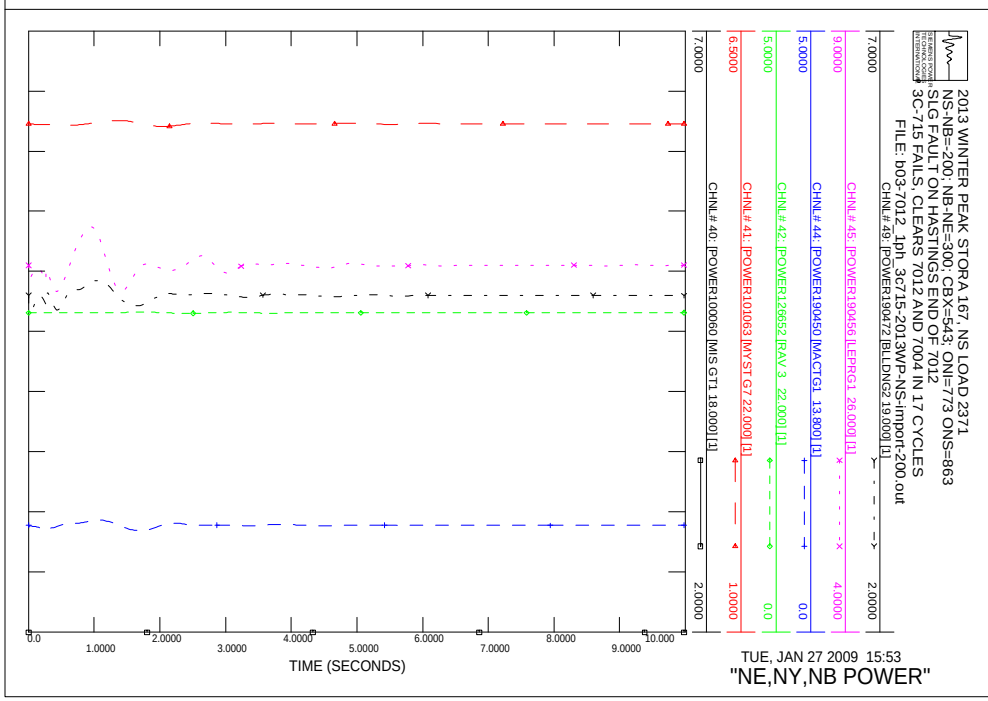
2013 WINTER PEAK STORA 167, NS LOAD 2371
NS-NB=-200; NB-NE=300; CBX=543; ONI=773 ONS=863
SLG FAULT ON HASTINGS END OF 7012
3C-715 FAILS, CLEARS 7012 AND 7004 IN 17 CYCLES
FILE: b03-7012_1ph_3c715-2013WP-NS-import-200.out
CHNL# 49: [POWER190472 [BLLDNG2 19.000] [1]]
CHNL# 45: [POWER190456 [LEPRG1 26.000] [1]]
CHNL# 44: [POWER190450 [MACTG1 13.800] [1]]
CHNL# 42: [POWER126652 [RAV 3 22.000] [1]]
CHNL# 41: [POWER101063 [MYST G7 22.000] [1]]
CHNL# 40: [POWER100060 [MIS GT1 18.000] [1]]
TIME (SECONDS)
TUE, JAN 27 2009 15:53
"NE,NY,NB POWER"

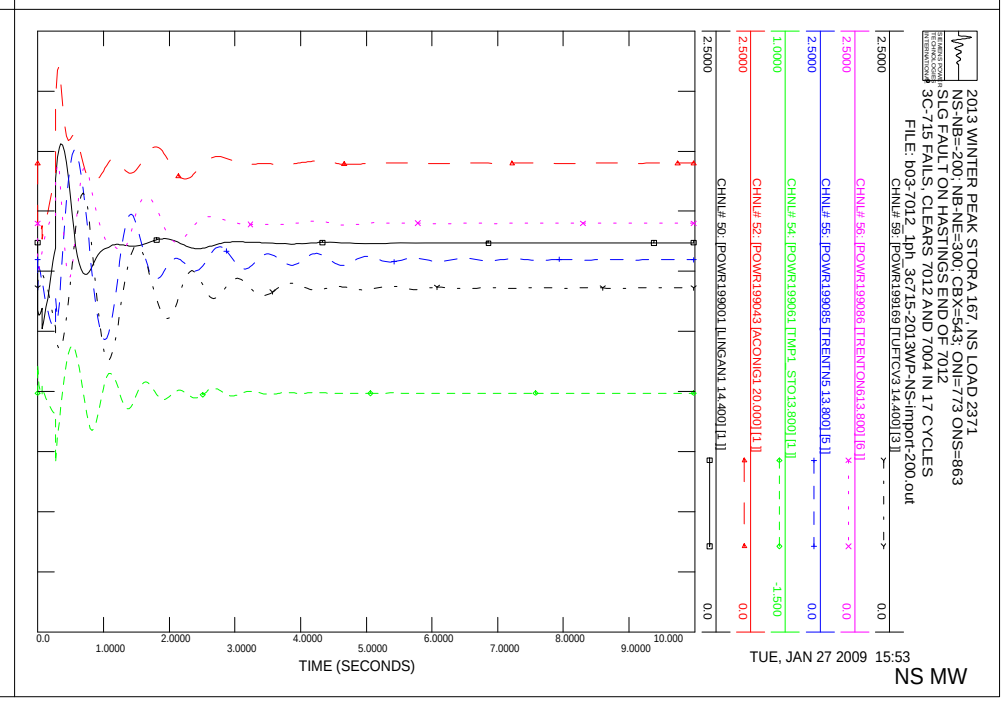
2013 WINTER PEAK STORA 167, NS LOAD 2371
NS-NB=-200; NB-NE=300; CBX=543; ONI=773 ONS=863
SLG FAULT ON HASTINGS END OF 7012
3C-715 FAILS, CLEARS 7012 AND 7004 IN 17 CYCLES
FILE: b03-7012_1ph_3c715-2013WP-NS-import-200.out
CHNL# 59: [POWR199169 [TUFTCV3 14.400] [3]]
CHNL# 56: [POWR199086 [TRENTON613.800] [6]]
CHNL# 55: [POWR199085 [TRENTN5 13.800] [5]]
CHNL# 54: [POWR199061 [TMP1 STO13.800] [1]]
CHNL# 52: [POWR199043 [ACONIG1 20.000] [1]]
CHNL# 50: [POWR199001 [LINGAN1 14.400] [1]]
TIME (SECONDS)
TUE, JAN 27 2009 15:53
NS MW

2013 WINTER PEAK STORA 167, NS LOAD 2371
NS-NB=-200; NB-NE=300; CBX=543; ONI=773 ONS=863
SLG FAULT ON HASTINGS END OF 7012
3C-715 FAILS, CLEARS 7012 AND 7004 IN 17 CYCLES
FILE: b03-7012_1ph_3c715-2013WP-NS-import-200.out
CHNL# 119: [VARS IR141-DIGBY]
CHNL# 118: [VARS IR137-STATIA]
CHNL# 117: [VARS IR114-GLENDHU]
CHNL# 116: [VARS IR84-DALHOUSIE]
CHNL# 115: [VARS IR82_NUTTBY]
CHNL# 114: [VARS IR45_AMHERST]
0.50000
-0.5000
0.0
1.0000
2.0000
3.0000
4.0000
5.0000
6.0000
7.0000
8.0000
9.0000
10.000
TIME (SECONDS)
TUE, JAN 27 2009 15:53
NS WIND MV

2013 WINTER PEAK STORA 167, NS LOAD 2371
NS-NB=-200; NB-NE=300; CBX=543; ONI=773 ONS=863
SLG FAULT ON HASTINGS END OF 7012
3C-715 FAILS, CLEARS 7012 AND 7004 IN 17 CYCLES
FILE: b03-7012_1ph_3c715-2013WP-NS-import-200.out
CHNL# 79: [POWER IR141-DIGBY]
CHNL# 78: [POWER IR137-STATIA]
CHNL# 77: [POWER IR114-GLENDHU]
CHNL# 76: [POWER IR84-DALHOUSIE]
CHNL# 75: [POWER IR82_NUTTBY]
CHNL# 74: [POWER IR45_AMHERST]
1.0000
0.0
1.0000
2.0000
3.0000
4.0000
5.0000
6.0000
7.0000
8.0000
9.0000
10.000
TIME (SECONDS)
TUE, JAN 27 2009 15:53
NS WIND MW

2013 WINTER PEAK STORA 167, NS LOAD 2371
NS-NB=-200; NB-NE=300; CBX=543; ONI=773 ONS=863
SLG FAULT ON HASTINGS END OF 7012
3C-715 FAILS, CLEARS 7012 AND 7004 IN 17 CYCLES
FILE: b03-7012_1ph_3c715-2013WP-NS-import-200.out
CHNL# 133: [VOLT199125 [ONSLOW 345.00]]
CHNL# 132: [VOLT199120 [HOPEWELL 345.00]]
CHNL# 131: [VOLT199045 [WOODBINE345.00]]
CHNL# 130: [VOLT190320 [SALBRY 345.00]]
CHNL# 128: [VOLT190004 [KESWICK 345.00]]
CHNL# 127: [VOLT 70002 [ORRINGTN345.00]]
1.1000
0.90000
0.0
1.0000
2.0000
3.0000
4.0000
5.0000
6.0000
7.0000
8.0000
9.0000
10.000
TIME (SECONDS)
TUE, JAN 27 2009 15:53
"345KV VOLTAGE"

2013 WINTER PEAK STORA 167, NS LOAD 2371
NS-NB=-200; NB-NE=300; CBX=543; ONI=773 ONS=863
SLG FAULT ON HASTINGS END OF 7012
3C-715 FAILS, CLEARS 7012 AND 7004 IN 17 CYCLES
FILE: b03-7012_1ph_3c715-2013WP-NS-import-200.out
CHNL# 125: 60*(1+[FREQ199125 [ONSLOW 345.00]])
CHNL# 124: 60*(1+[FREQ199120 [HOPEWELL 345.00]])
CHNL# 123: 60*(1+[FREQ199045 [WOODBINE345.00]])
CHNL# 122: 60*(1+[FREQ190320 [SALBRY 345.00]])
CHNL# 121: 60*(1+[FREQ190197 [C.COVE 345.00]])
CHNL# 120: 60*(1+[FREQ 70002 [ORRINGTN345.00]])
60.500
59.500
0.0
1.0000
2.0000
3.0000
4.0000
5.0000
6.0000
7.0000
8.0000
9.0000
10.000
TIME (SECONDS)
TUE, JAN 27 2009 15:53
FREQUENCY HZ

2013 WINTER PEAK STORA 167, NS LOAD 2371
NS-NB=-200; NB-NE=300; CBX=543; ONI=773 ONS=863
SLG FAULT ON HASTINGS END OF 7012
3C-715 FAILS, CLEARS 7012 AND 7004 IN 17 CYCLES
FILE: b03-7012_1ph_3c715-2013WP-NS-import-200.out
CHNL# 146: [VOLT199280 [TUSKET A138.00]]
CHNL# 145: [VOLT199193 [HWAS 138.00]]
CHNL# 144: [VOLT199165 [TUFTCOVE138.00]]
CHNL# 143: [VOLT199138 [SPRNGHIL138.00]]
CHNL# 142: [VOLT199090 [SON-TREN138.00]]
CHNL# 141: [VOLT199051 [HASTINGS138.00]]
1.2000
0.70000
0.0
1.0000
2.0000
3.0000
4.0000
5.0000
6.0000
7.0000
8.0000
9.0000
10.000
TIME (SECONDS)
TUE, JAN 27 2009 15:53
138KV BUS VOLTS

2013 WINTER PEAK STORA 167, NS LOAD 2371
NS-NB=-200; NB-NE=300; CBX=543; ONI=773 ONS=863
SLG FAULT ON HASTINGS END OF 7012
3C-715 FAILS, CLEARS 7012 AND 7004 IN 17 CYCLES
FILE: b03-7012_1ph_3c715-2013WP-NS-import-200.out
CHNL# 140: [VOLT199240 [BWATER A230.00]]
CHNL# 139: [VOLT199200 [BRUSHY 230.00]]
CHNL# 138: [VOLT199130 [ONSLOW 230.00]]
CHNL# 137: [VOLT199050 [HASTINGS230.00]]
CHNL# 136: [VOLT199044 [PT.ACONI230.00]]
CHNL# 135: [VOLT199000 [LINGAN 230.00]]
1.2000
0.70000
0.0
1.0000
2.0000
3.0000
4.0000
5.0000
6.0000
7.0000
8.0000
9.0000
10.000
TIME (SECONDS)
TUE, JAN 27 2009 15:53
230KV BUS VOLTS

2013 WINTER PEAK STORA 167, NS LOAD 2371
NS-NB=-200; NB-NE=300; CBX=543; ONI=773 ONS=863
SLG FAULT ON HASTINGS END OF 7012
3C-715 FAILS, CLEARS 7012 AND 7004 IN 17 CYCLES
FILE: b03-7012_1ph_3c715-2013WP-NS-import-200.out
CHNL# 217: [L6533MW]
CHNL# 215: [L6503MW]
CHNL# 197: [L8003MW]
CHNL# 195: [L8004MW]
CHNL# 193: [L8001MW]
CHNL# 221: [L3001MW]
250.00
500.00
1000.0
-250.0
0.0
-1000.
0.0
1.0000
2.0000
3.0000
4.0000
5.0000
6.0000
7.0000
8.0000
9.0000
10.000
TIME (SECONDS)
TUE, JAN 27 2009 15:53
LINE FLOW MW

2013 WINTER PEAK STORA 167, NS LOAD 2371
NS-NB=-200; NB-NE=300; CBX=543; ONI=773 ONS=863
SLG FAULT ON HASTINGS END OF 7012
3C-715 FAILS, CLEARS 7012 AND 7004 IN 17 CYCLES
FILE: b03-7012_1ph_3c715-2013WP-NS-import-200.out
CHNL# 154: [IR141-DIGBYH69.0 VOLTS]
CHNL# 153: [IR137-STATIG25.0 VOLTS]
CHNL# 152: [IR114-GLENDH138.0 VOLTS]
CHNL# 151: [IR84-DALHOHV230.0 VOLTS]
CHNL# 150: [IR82 NUTBHV69.0 VOLTS]
CHNL# 149: [IR45 AMHERTP138.0 VOLTS]
1.2000
0.70000
0.0
1.0000
2.0000
3.0000
4.0000
5.0000
6.0000
7.0000
8.0000
9.0000
10.000
TIME (SECONDS)
TUE, JAN 27 2009 15:53
WIND BUS VOLTS

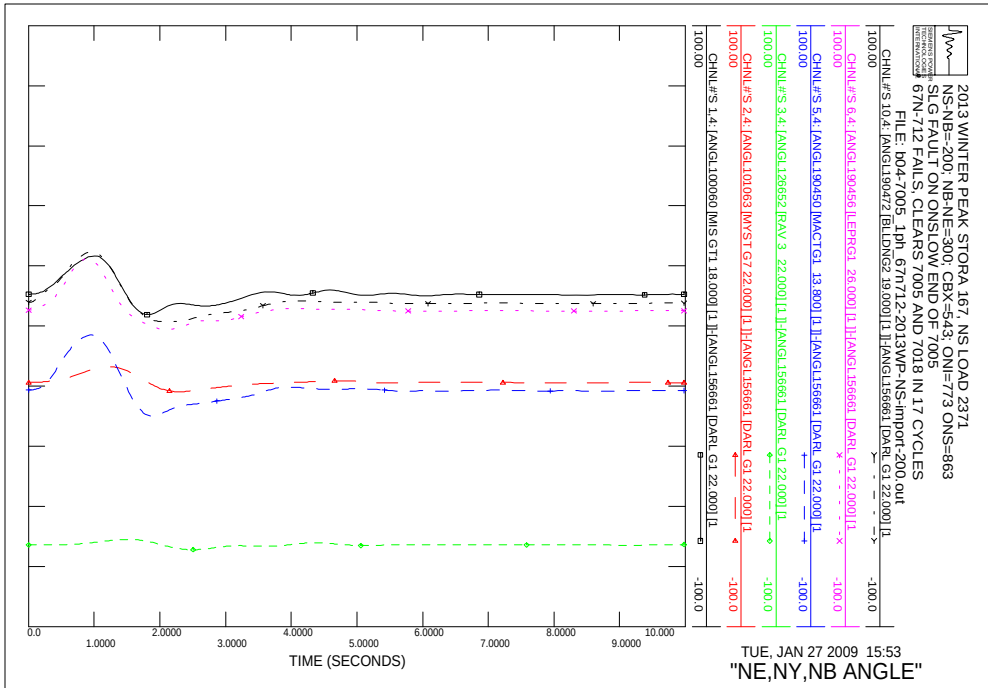
2013 WINTER PEAK STORA 167, NS LOAD 2371
NS-NB=-200; NB-NE=300; CBX=543; ONI=773 ONS=863
SLG FAULT ON ONSLOW END OF 7005
67N-712 FAILS, CLEARS 7005 AND 7018 IN 17 CYCLES
FILE: b04-7005_1ph_67n712-2013WP-NS-import-200.out
CHNL#S 10,4: [ANGL190472 [BLLDNG2 19.000] [1]]-[ANGL156661 [DARL G1 22.000] [1
CHNL#S 6,4: [ANGL190456 [LEPRG1 26.000] [1]]-[ANGL156661 [DARL G1 22.000] [1
CHNL#S 5,4: [ANGL190450 [MACTG1 13.800] [1]]-[ANGL156661 [DARL G1 22.000] [1
CHNL#S 3,4: [ANGL126652 [RAV 3 22.000] [1]]-[ANGL156661 [DARL G1 22.000] [1
CHNL#S 2,4: [ANGL101063 [MYST G7 22.000] [1]]-[ANGL156661 [DARL G1 22.000] [1
CHNL#S 1,4: [ANGL100060 [MIS GT1 18.000] [1]]-[ANGL156661 [DARL G1 22.000] [1
TIME (SECONDS)
TUE, JAN 27 2009 15:53
"NE,NY,NB ANGLE"

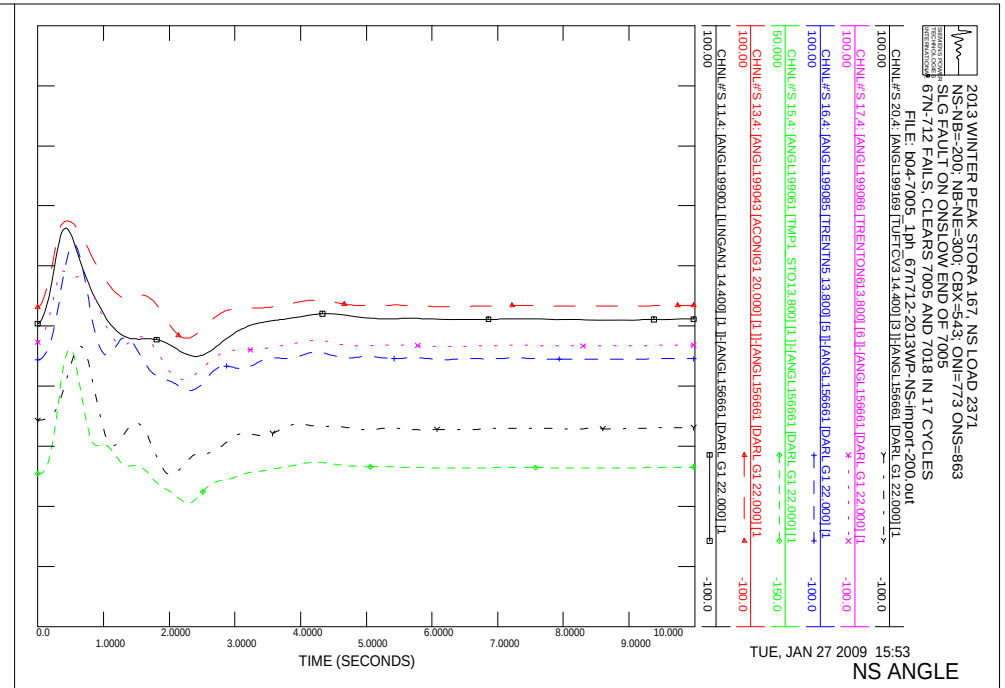
2013 WINTER PEAK STORA 167, NS LOAD 2371
NS-NB=-200; NB-NE=300; CBX=543; ONI=773 ONS=863
SLG FAULT ON ONSLOW END OF 7005
67N-712 FAILS, CLEARS 7005 AND 7018 IN 17 CYCLES
FILE: b04-7005_1ph_67n712-2013WP-NS-import-200.out
CHNL#S 20,4: [ANGL199169 [TUFTCV3 14.400] [3]]-[ANGL156661 [DARL G1 22.000] [1
CHNL#S 17,4: [ANGL199086 [TRENTON613.800] [6]]-[ANGL156661 [DARL G1 22.000] [1
CHNL#S 16,4: [ANGL199085 [TRENTN5 13.800] [5]]-[ANGL156661 [DARL G1 22.000] [1
CHNL#S 15,4: [ANGL199061 [TMP1 STO13.800] [1]]-[ANGL156661 [DARL G1 22.000] [1
CHNL#S 13,4: [ANGL199043 [ACONIG1 20.000] [1]]-[ANGL156661 [DARL G1 22.000] [1
CHNL#S 11,4: [ANGL199001 [LINGAN1 14.400] [1]]-[ANGL156661 [DARL G1 22.000] [1
TIME (SECONDS)
TUE, JAN 27 2009 15:53
NS ANGLE

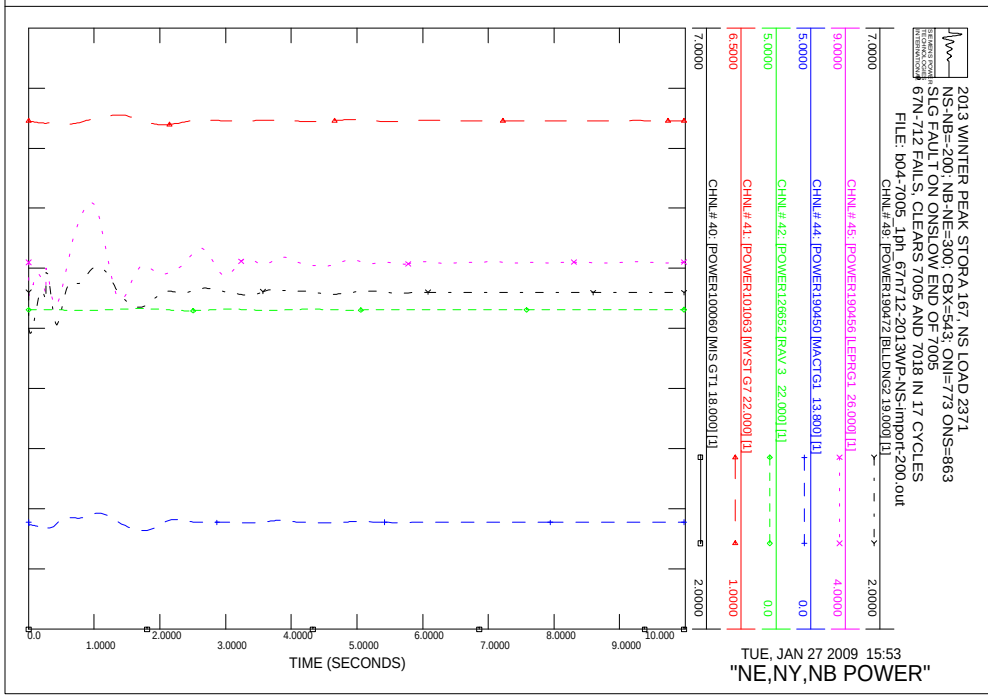
2013 WINTER PEAK STORA 167, NS LOAD 2371
NS-NB=-200; NB-NE=300; CBX=543; ONI=773 ONS=863
SLG FAULT ON ONSLOW END OF 7005
67N-712 FAILS, CLEARS 7005 AND 7018 IN 17 CYCLES
FILE: b04-7005_1ph_67n712-2013WP-NS-import-200.out
CHNL# 49: [POWER190472 [BLLDNG2 19.000] [1]]
CHNL# 45: [POWER190456 [LEPRG1 26.000] [1]]
CHNL# 44: [POWER190450 [MACTG1 13.800] [1]]
CHNL# 42: [POWER126652 [RAV 3 22.000] [1]]
CHNL# 41: [POWER101063 [MYST G7 22.000] [1]]
CHNL# 40: [POWER100060 [MIS GT1 18.000] [1]]
TIME (SECONDS)
TUE, JAN 27 2009 15:53
"NE,NY,NB POWER"

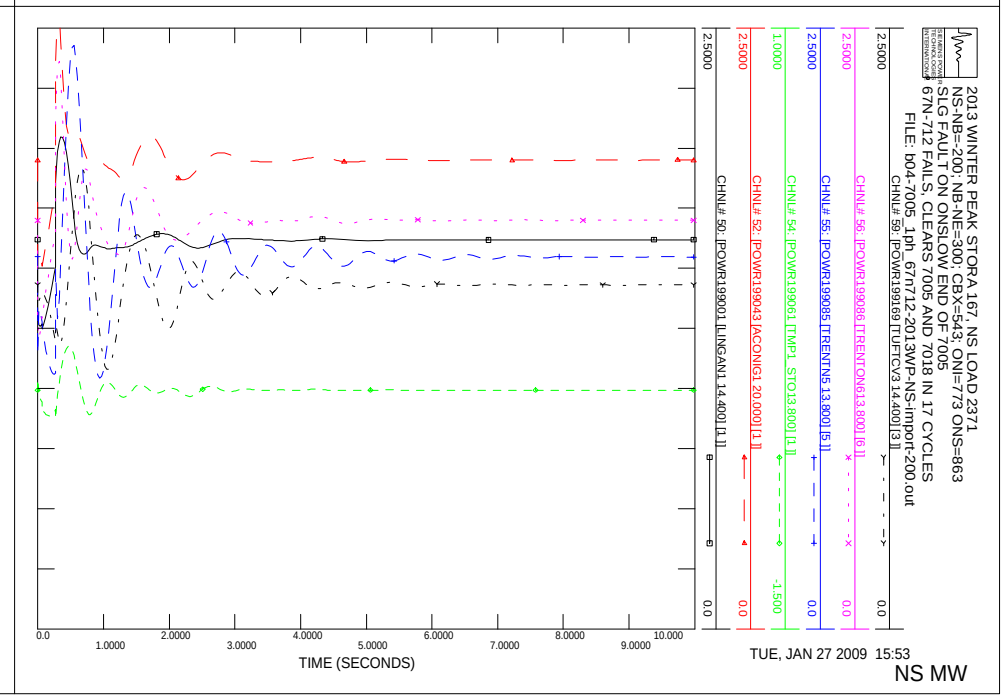
2013 WINTER PEAK STORA 167, NS LOAD 2371
NS-NB=-200; NB-NE=300; CBX=543; ONI=773 ONS=863
SLG FAULT ON ONSLOW END OF 7005
67N-712 FAILS, CLEARS 7005 AND 7018 IN 17 CYCLES
FILE: b04-7005_1ph_67n712-2013WP-NS-import-200.out
CHNL# 59: [POWR199169 [TUFTCV3 14.400] [3]]
CHNL# 56: [POWR199086 [TRENTON613.800] [6]]
CHNL# 55: [POWR199085 [TRENTN5 13.800] [5]]
CHNL# 54: [POWR199061 [TMP1 STO13.800] [1]]
CHNL# 52: [POWR199043 [ACONIG1 20.000] [1]]
CHNL# 50: [POWR199001 [LINGAN1 14.400] [1]]
TIME (SECONDS)
TUE, JAN 27 2009 15:53
NS MW

2013 WINTER PEAK STORA 167, NS LOAD 2371
NS-NB=-200; NB-NE=300; CBX=543; ONI=773 ONS=863
SLG FAULT ON ONSLOW END OF 7005
67N-712 FAILS, CLEARS 7005 AND 7018 IN 17 CYCLES
FILE: b04-7005_1ph_67n712-2013WP-NS-import-200.out
CHNL# 119: [VARS IR141-DIGBY]
CHNL# 118: [VARS IR137-STATIA]
CHNL# 117: [VARS IR114-GLENDHU]
CHNL# 116: [VARS IR84-DALHOUSIE]
CHNL# 115: [VARS IR82_NUTTBY]
CHNL# 114: [VARS IR45_AMHERST]
0.50000
-0.5000
0.0
1.0000
2.0000
3.0000
4.0000
5.0000
6.0000
7.0000
8.0000
9.0000
10.000
TIME (SECONDS)
TUE, JAN 27 2009 15:53
NS WIND MV

2013 WINTER PEAK STORA 167, NS LOAD 2371
NS-NB=-200; NB-NE=300; CBX=543; ONI=773 ONS=863
SLG FAULT ON ONSLOW END OF 7005
67N-712 FAILS, CLEARS 7005 AND 7018 IN 17 CYCLES
FILE: b04-7005_1ph_67n712-2013WP-NS-import-200.out
CHNL# 79: [POWER IR141-DIGBY]
CHNL# 78: [POWER IR137-STATIA]
CHNL# 77: [POWER IR114-GLENDHU]
CHNL# 76: [POWER IR84-DALHOUSIE]
CHNL# 75: [POWER IR82_NUTTBY]
CHNL# 74: [POWER IR45_AMHERST]
1.0000
0.0
0.0
1.0000
2.0000
3.0000
4.0000
5.0000
6.0000
7.0000
8.0000
9.0000
10.000
TIME (SECONDS)
TUE, JAN 27 2009 15:53
NS WIND MW

2013 WINTER PEAK STORA 167, NS LOAD 2371
NS-NB=-200; NB-NE=300; CBX=543; ONI=773 ONS=863
SLG FAULT ON ONSLOW END OF 7005
67N-712 FAILS, CLEARS 7005 AND 7018 IN 17 CYCLES
FILE: b04-7005_1ph_67n712-2013WP-NS-import-200.out
CHNL# 133: [VOLT199125 [ONSLOW 345.00]]
CHNL# 132: [VOLT199120 [HOPEWELL 345.00]]
CHNL# 131: [VOLT199045 [WOODBINE345.00]]
CHNL# 130: [VOLT190320 [SALBRY 345.00]]
CHNL# 128: [VOLT190004 [KESWICK 345.00]]
CHNL# 127: [VOLT 70002 [ORRINGTN345.00]]
1.1000
0.90000
0.0
1.0000
2.0000
3.0000
4.0000
5.0000
6.0000
7.0000
8.0000
9.0000
10.000
TIME (SECONDS)
TUE, JAN 27 2009 15:53
"345KV VOLTAGE"

2013 WINTER PEAK STORA 167, NS LOAD 2371
NS-NB=-200; NB-NE=300; CBX=543; ONI=773 ONS=863
SLG FAULT ON ONSLOW END OF 7005
67N-712 FAILS, CLEARS 7005 AND 7018 IN 17 CYCLES
FILE: b04-7005_1ph_67n712-2013WP-NS-import-200.out
CHNL# 125: 60*(1+[FREQ199125 [ONSLOW 345.00]])
CHNL# 124: 60*(1+[FREQ199120 [HOPEWELL 345.00]])
CHNL# 123: 60*(1+[FREQ199045 [WOODBINE345.00]])
CHNL# 122: 60*(1+[FREQ190320 [SALBRY 345.00]])
CHNL# 121: 60*(1+[FREQ190197 [C.COVE 345.00]])
CHNL# 120: 60*(1+[FREQ 70002 [ORRINGTN345.00]])
60.500
59.500
0.0
1.0000
2.0000
3.0000
4.0000
5.0000
6.0000
7.0000
8.0000
9.0000
10.000
TIME (SECONDS)
TUE, JAN 27 2009 15:53
FREQUENCY HZ

2013 WINTER PEAK STORA 167, NS LOAD 2371
NS-NB=-200; NB-NE=300; CBX=543; ONI=773 ONS=863
SLG FAULT ON ONSLOW END OF 7005
67N-712 FAILS, CLEARS 7005 AND 7018 IN 17 CYCLES
FILE: b04-7005_1ph_67n712-2013WP-NS-import-200.out
CHNL# 146: [VOLT199280 [TUSKET A138.00]]
CHNL# 145: [VOLT199193 [HHWAS 138.00]]
CHNL# 144: [VOLT199165 [TUFTCOVE138.00]]
CHNL# 143: [VOLT199138 [SPRNGHILL138.00]]
CHNL# 142: [VOLT199090 [SON-TREN138.00]]
CHNL# 141: [VOLT199051 [HASTINGS138.00]]
1.2000
0.70000
0.0
1.0000
2.0000
3.0000
4.0000
5.0000
6.0000
7.0000
8.0000
9.0000
10.000
TIME (SECONDS)
TUE, JAN 27 2009 15:53
138KV BUS VOLTS

2013 WINTER PEAK STORA 167, NS LOAD 2371
NS-NB=-200; NB-NE=300; CBX=543; ONI=773 ONS=863
SLG FAULT ON ONSLOW END OF 7005
67N-712 FAILS, CLEARS 7005 AND 7018 IN 17 CYCLES
FILE: b04-7005_1ph_67n712-2013WP-NS-import-200.out
CHNL# 140: [VOLT199240 [BWATER A230.00]]
CHNL# 139: [VOLT199200 [BRUSHY 230.00]]
CHNL# 138: [VOLT199130 [ONSLOW 230.00]]
CHNL# 137: [VOLT199050 [HASTINGS230.00]]
CHNL# 136: [VOLT199044 [PT.ACONI230.00]]
CHNL# 135: [VOLT199000 [LINGAN 230.00]]
1.2000
0.70000
0.0
1.0000
2.0000
3.0000
4.0000
5.0000
6.0000
7.0000
8.0000
9.0000
10.000
TIME (SECONDS)
TUE, JAN 27 2009 15:53
230KV BUS VOLTS

2013 WINTER PEAK STORA 167, NS LOAD 2371
NS-NB=-200; NB-NE=300; CBX=543; ONI=773 ONS=863
SLG FAULT ON ONSLOW END OF 7005
67N-712 FAILS, CLEARS 7005 AND 7018 IN 17 CYCLES
FILE: b04-7005_1ph_67n712-2013WP-NS-import-200.out
CHNL# 217: [L6513NWV]
CHNL# 215: [L6503MWV]
CHNL# 197: [L8003MWV]
CHNL# 195: [L8004MWV]
CHNL# 193: [L8001MWV]
CHNL# 221: [L3001MWV]
250.00
500.00
1000.0
0.0
-250.0
-1000.
0.0
1.0000
2.0000
3.0000
4.0000
5.0000
6.0000
7.0000
8.0000
9.0000
10.000
TIME (SECONDS)
TUE, JAN 27 2009 15:53
LINE FLOW MW

2013 WINTER PEAK STORA 167, NS LOAD 2371
NS-NB=-200; NB-NE=300; CBX=543; ONI=773 ONS=863
SLG FAULT ON ONSLOW END OF 7005
67N-712 FAILS, CLEARS 7005 AND 7018 IN 17 CYCLES
FILE: b04-7005_1ph_67n712-2013WP-NS-import-200.out
CHNL# 154: [IR141-DIGBYH69.0 VOLTS]
CHNL# 153: [IR137-STATIG25.0 VOLTS]
CHNL# 152: [IR114-GLENDH138.0 VOLTS]
CHNL# 151: [IR84-DALHOHV230.0 VOLTS]
CHNL# 150: [IR82 NUTBHV69.0 VOLTS]
CHNL# 149: [IR45 AMHERTP138.0 VOLTS]
1.2000
0.70000
0.0
1.0000
2.0000
3.0000
4.0000
5.0000
6.0000
7.0000
8.0000
9.0000
10.000
TIME (SECONDS)
TUE, JAN 27 2009 15:53
WIND BUS VOLTS

2013 WINTER PEAK STORA 167, NS LOAD 2371
NS-NB=-200; NB-NE=300; CBX=543; ONI=773 ONS=863
SLG FAULT ON ONSLOW END OF 7005
67N-712 FAILS, CLEARS 7005 AND 7018 IN 17 CYCLES; SPS TRIPS
FILE: b04s-7005_1ph_67n712-2013WP-NS-import-200.out
CHNL# 20: [ANGL199169 [TUFTCV3 14.400] [3]] [ANGL156661 [DARL G1 22.000] [1]
CHNL# 17: [ANGL199086 [TRENTON613.800] [6]] [ANGL156661 [DARL G1 22.000] [1]
CHNL# 16: [ANGL199085 [TRENTN5 13.800] [5]] [ANGL156661 [DARL G1 22.000] [1]
CHNL# 15: [ANGL199061 [TMP1 STO13.800] [1]] [ANGL156661 [DARL G1 22.000] [1]
CHNL# 13: [ANGL199043 [ACONIG1 20.000] [1]] [ANGL156661 [DARL G1 22.000] [1]
CHNL# 11: [ANGL199001 [LINGAN1 14.400] [1]] [ANGL156661 [DARL G1 22.000] [1]
100.00
-100.0
0.0
1.0000
2.0000
3.0000
4.0000
5.0000
6.0000
7.0000
8.0000
9.0000
10.000
TIME (SECONDS)
TUE, JAN 27 2009 15:53
NS ANGLE

2013 WINTER PEAK STORA 167, NS LOAD 2371
NS-NB=-200; NB-NE=300; CBX=543; ONI=773 ONS=863
SLG FAULT ON ONSLOW END OF 7005
67N-712 FAILS, CLEARS 7005 AND 7018 IN 17 CYCLES; SPS TRIPS
FILE: b04s-7005_1ph_67n712-2013WP-NS-import-200.out
CHNL# 10: [ANGL190472 [BLLDNG2 19.000] [1]] [ANGL156661 [DARL G1 22.000] [1]
CHNL# 6: [ANGL190456 [LEPRG1 26.000] [1]] [ANGL156661 [DARL G1 22.000] [1]
CHNL# 5: [ANGL190450 [MACTG1 13.800] [1]] [ANGL156661 [DARL G1 22.000] [1]
CHNL# 3: [ANGL126652 [RAV 3 22.000] [1]] [ANGL156661 [DARL G1 22.000] [1]
CHNL# 2: [ANGL101063 [MYST G7 22.000] [1]] [ANGL156661 [DARL G1 22.000] [1]
CHNL# 1: [ANGL100060 [MIS GT1 18.000] [1]] [ANGL156661 [DARL G1 22.000] [1]
100.00
-100.0
0.0
1.0000
2.0000
3.0000
4.0000
5.0000
6.0000
7.0000
8.0000
9.0000
10.000
TIME (SECONDS)
TUE, JAN 27 2009 15:53
"NE,NY,NB ANGLE"

2013 WINTER PEAK STORA 167, NS LOAD 2371
NS-NB=-200; NB-NE=300; CBX=543; ONI=773 ONS=863
SLG FAULT ON ONSLOW END OF 7005
67N-712 FAILS, CLEARS 7005 AND 7018 IN 17 CYCLES; SPS TRIPS
FILE: b04s-7005_1ph_67n712-2013WP-NS-import-200.out
CHNL# 59: [POWER199169 [TUFTCV3 14.400] [3]]
CHNL# 56: [POWER199086 [TRENTON613.800] [6]]
CHNL# 55: [POWER199085 [TRENTN5 13.800] [5]]
CHNL# 54: [POWER199061 [TMP1 STO13.800] [1]]
CHNL# 52: [POWER199043 [ACONIG1 20.000] [1]]
CHNL# 50: [POWER199001 [LINGAN1 14.400] [1]]
2.5000
1.0000
-1.500
0.0
1.0000
2.0000
3.0000
4.0000
5.0000
6.0000
7.0000
8.0000
9.0000
10.000
TIME (SECONDS)
TUE, JAN 27 2009 15:53
NS MW

2013 WINTER PEAK STORA 167, NS LOAD 2371
NS-NB=-200; NB-NE=300; CBX=543; ONI=773 ONS=863
SLG FAULT ON ONSLOW END OF 7005
67N-712 FAILS, CLEARS 7005 AND 7018 IN 17 CYCLES; SPS TRIPS
FILE: b04s-7005_1ph_67n712-2013WP-NS-import-200.out
CHNL# 49: [POWER190472 [BLLDNG2 19.000] [1]]
CHNL# 45: [POWER190456 [LEPRG1 26.000] [1]]
CHNL# 44: [POWER190450 [MACTG1 13.800] [1]]
CHNL# 42: [POWER126652 [RAV 3 22.000] [1]]
CHNL# 41: [POWER101063 [MYST G7 22.000] [1]]
CHNL# 40: [POWER100060 [MIS GT1 18.000] [1]]
7.0000
9.0000
5.0000
6.5000
2.0000
4.0000
0.0
1.0000
1.0000
2.0000
3.0000
4.0000
5.0000
6.0000
7.0000
8.0000
9.0000
10.000
TIME (SECONDS)
TUE, JAN 27 2009 15:53
"NE,NY,NB POWER"

2013 WINTER PEAK STORA 167, NS LOAD 2371
NS-NB=-200; NB-NE=300; CBX=543; ONI=773 ONS=863
SLG FAULT ON ONSLOW END OF 7005
67N-712 FAILS, CLEARS 7005 AND 7018 IN 17 CYCLES; SPS TRIPS
FILE: b04s-7005_1ph_67n712-2013WP-NS-import-200.out
CHNL# 119: [VARS IR141-DIGBY]
CHNL# 118: [VARS IR137-STATIA]
CHNL# 117: [VARS IR114-GLENDHU]
CHNL# 116: [VARS IR84-DALHOUSIE]
CHNL# 115: [VARS IR82_NUTTBY]
CHNL# 114: [VARS IR45_AMHERST]
TIME (SECONDS)
TUE, JAN 27 2009 15:53
NS WIND MV

2013 WINTER PEAK STORA 167, NS LOAD 2371
NS-NB=-200; NB-NE=300; CBX=543; ONI=773 ONS=863
SLG FAULT ON ONSLOW END OF 7005
67N-712 FAILS, CLEARS 7005 AND 7018 IN 17 CYCLES; SPS TRIPS
FILE: b04s-7005_1ph_67n712-2013WP-NS-import-200.out
CHNL# 79: [POWER IR141-DIGBY]
CHNL# 78: [POWER IR137-STATIA]
CHNL# 77: [POWER IR114-GLENDHU]
CHNL# 76: [POWER IR84-DALHOUSIE]
CHNL# 75: [POWER IR82_NUTTBY]
CHNL# 74: [POWER IR45_AMHERST]
TIME (SECONDS)
TUE, JAN 27 2009 15:53
NS WIND MW

2013 WINTER PEAK STORA 167, NS LOAD 2371
NS-NB=-200; NB-NE=300; CBX=543; ONI=773 ONS=863
SLG FAULT ON ONSLOW END OF 7005
67N-712 FAILS, CLEARS 7005 AND 7018 IN 17 CYCLES; SPS TRIPS
FILE: b04s-7005_1ph_67n712-2013WP-NS-import-200.out
CHNL# 133: [VOLT199125 [ONSLOW 345.00]]
CHNL# 132: [VOLT199120 [HOPEWELL 345.00]]
CHNL# 131: [VOLT199045 [WOODBINE345.00]]
CHNL# 130: [VOLT190320 [SALBRY 345.00]]
CHNL# 128: [VOLT190004 [KESWICK 345.00]]
CHNL# 127: [VOLT 70002 [ORRINGTN345.00]]
TIME (SECONDS)
TUE, JAN 27 2009 15:53
"345KV VOLTAGE"

2013 WINTER PEAK STORA 167, NS LOAD 2371
NS-NB=-200; NB-NE=300; CBX=543; ONI=773 ONS=863
SLG FAULT ON ONSLOW END OF 7005
67N-712 FAILS, CLEARS 7005 AND 7018 IN 17 CYCLES; SPS TRIPS
FILE: b04s-7005_1ph_67n712-2013WP-NS-import-200.out
CHNL# 125: [60*(1+[FREQ199125 [ONSLOW 345.00]])]
CHNL# 124: [60*(1+[FREQ199120 [HOPEWELL 345.00]])]
CHNL# 123: [60*(1+[FREQ199045 [WOODBINE345.00]])]
CHNL# 122: [60*(1+[FREQ190320 [SALBRY 345.00]])]
CHNL# 121: [60*(1+[FREQ190197 [C.COVE 345.00]])]
CHNL# 120: [60*(1+[FREQ 70002 [ORRINGTN345.00]])]
TIME (SECONDS)
TUE, JAN 27 2009 15:53
FREQUENCY HZ

2013 WINTER PEAK STORA 167, NS LOAD 2371
NS-NB=-200; NB-NE=300; CBX=543; ONI=773 ONS=863
SLG FAULT ON ONSLOW END OF 7005
67N-712 FAILS, CLEARS 7005 AND 7018 IN 17 CYCLES; SPS TRIPS
FILE: b04s-7005_1ph_67n712-2013WP-NS-import-200.out
CHNL# 146: [VOLT199280 [TUSKET A138.00]]
CHNL# 145: [VOLT199193 [HHWAS 138.00]]
CHNL# 144: [VOLT199165 [TUFTCOVE138.00]]
CHNL# 143: [VOLT199138 [SPRNGHIL138.00]]
CHNL# 142: [VOLT199090 [50N-TREN138.00]]
CHNL# 141: [VOLT199051 [HASTINGS138.00]]
1.2000
0.70000
0.0
1.0000
2.0000
3.0000
4.0000
5.0000
6.0000
7.0000
8.0000
9.0000
10.000
TIME (SECONDS)
TUE, JAN 27 2009 15:53
138KV BUS VOLTS

2013 WINTER PEAK STORA 167, NS LOAD 2371
NS-NB=-200; NB-NE=300; CBX=543; ONI=773 ONS=863
SLG FAULT ON ONSLOW END OF 7005
67N-712 FAILS, CLEARS 7005 AND 7018 IN 17 CYCLES; SPS TRIPS
FILE: b04s-7005_1ph_67n712-2013WP-NS-import-200.out
CHNL# 140: [VOLT199240 [BWATER A230.00]]
CHNL# 139: [VOLT199200 [BRUSHY 230.00]]
CHNL# 138: [VOLT199130 [ONSLOW 230.00]]
CHNL# 137: [VOLT199050 [HASTINGS230.00]]
CHNL# 136: [VOLT199044 [PT.ACONI230.00]]
CHNL# 135: [VOLT199000 [LINGAN 230.00]]
1.2000
0.70000
0.0
1.0000
2.0000
3.0000
4.0000
5.0000
6.0000
7.0000
8.0000
9.0000
10.000
TIME (SECONDS)
TUE, JAN 27 2009 15:53
230KV BUS VOLTS

2013 WINTER PEAK STORA 167, NS LOAD 2371
NS-NB=-200; NB-NE=300; CBX=543; ONI=773 ONS=863
SLG FAULT ON ONSLOW END OF 7005
67N-712 FAILS, CLEARS 7005 AND 7018 IN 17 CYCLES; SPS TRIPS
FILE: b04s-7005_1ph_67n712-2013WP-NS-import-200.out
CHNL# 217: [L6513MW]
CHNL# 215: [L6503MW]
CHNL# 197: [L8003MW]
CHNL# 195: [L8004MW]
CHNL# 193: [L8001MW]
CHNL# 221: [L3001MW]
250.00
500.00
1000.0
0.0
-250.0
-1000.
TIME (SECONDS)
TUE, JAN 27 2009 15:53
LINE FLOW MW

2013 WINTER PEAK STORA 167, NS LOAD 2371
NS-NB=-200; NB-NE=300; CBX=543; ONI=773 ONS=863
SLG FAULT ON ONSLOW END OF 7005
67N-712 FAILS, CLEARS 7005 AND 7018 IN 17 CYCLES; SPS TRIPS
FILE: b04s-7005_1ph_67n712-2013WP-NS-import-200.out
CHNL# 154: [IR141-DIGBYH69.0 VOLTS]
CHNL# 153: [IR137-STATIG25.0 VOLTS]
CHNL# 152: [IR114-GLENDH138.0 VOLTS]
CHNL# 151: [IR84-DALHOHV230.0 VOLTS]
CHNL# 150: [IR82 NUTBHV69.0 VOLTS]
CHNL# 149: [IR45 AMHERTP138.0 VOLTS]
1.2000
0.70000
0.0
1.0000
2.0000
3.0000
4.0000
5.0000
6.0000
7.0000
8.0000
9.0000
10.000
TIME (SECONDS)
TUE, JAN 27 2009 15:53
WIND BUS VOLTS

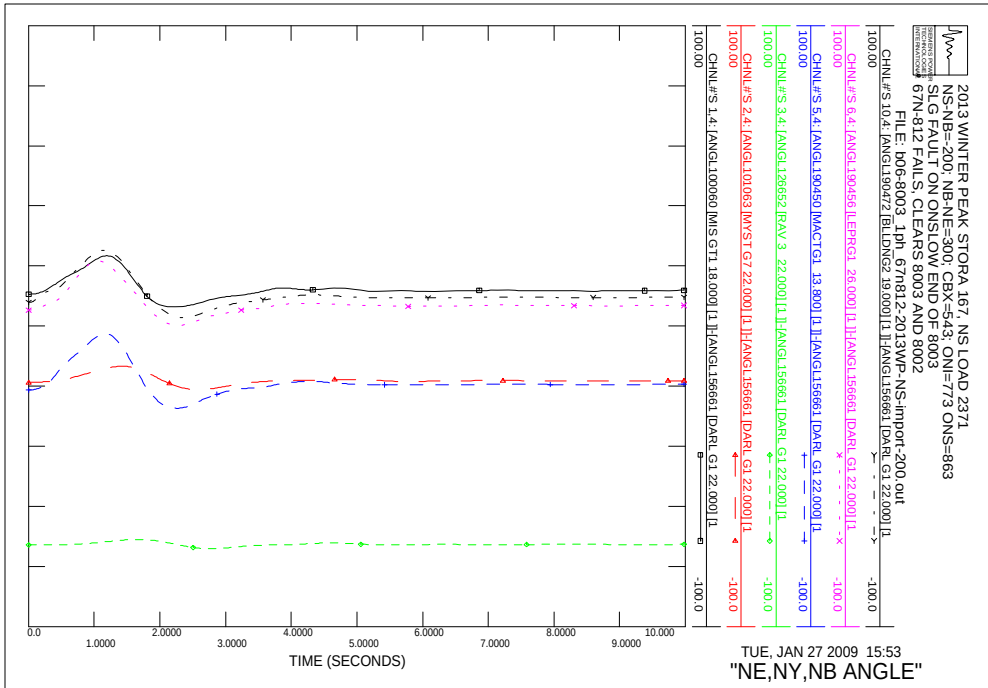
2013 WINTER PEAK STORA 167, NS LOAD 2371
NS-NB=-200; NB-NE=300; CBX=543; ONI=773 ONS=863
SLG FAULT ON ONSLOW END OF 8003
67N-812 FAILS, CLEARS 8003 AND 8002
FILE: b06-8003_1ph_67n812-2013WP-NS-import-200.out
CHNL#S 10,4: [ANGL190472 [BLLDNG2 19.000] [1]]-[ANGL156661 [DARL G1 22.000] [1
CHNL#S 6,4: [ANGL190456 [LEPRG1 26.000] [1]]-[ANGL156661 [DARL G1 22.000] [1
CHNL#S 5,4: [ANGL190450 [MACTG1 13.800] [1]]-[ANGL156661 [DARL G1 22.000] [1
CHNL#S 3,4: [ANGL126652 [RAV 3 22.000] [1]]-[ANGL156661 [DARL G1 22.000] [1
CHNL#S 2,4: [ANGL101063 [MYST G7 22.000] [1]]-[ANGL156661 [DARL G1 22.000] [1
CHNL#S 1,4: [ANGL100060 [MIS GT1 18.000] [1]]-[ANGL156661 [DARL G1 22.000] [1
TIME (SECONDS)
TUE, JAN 27 2009 15:53
"NE,NY,NB ANGLE"

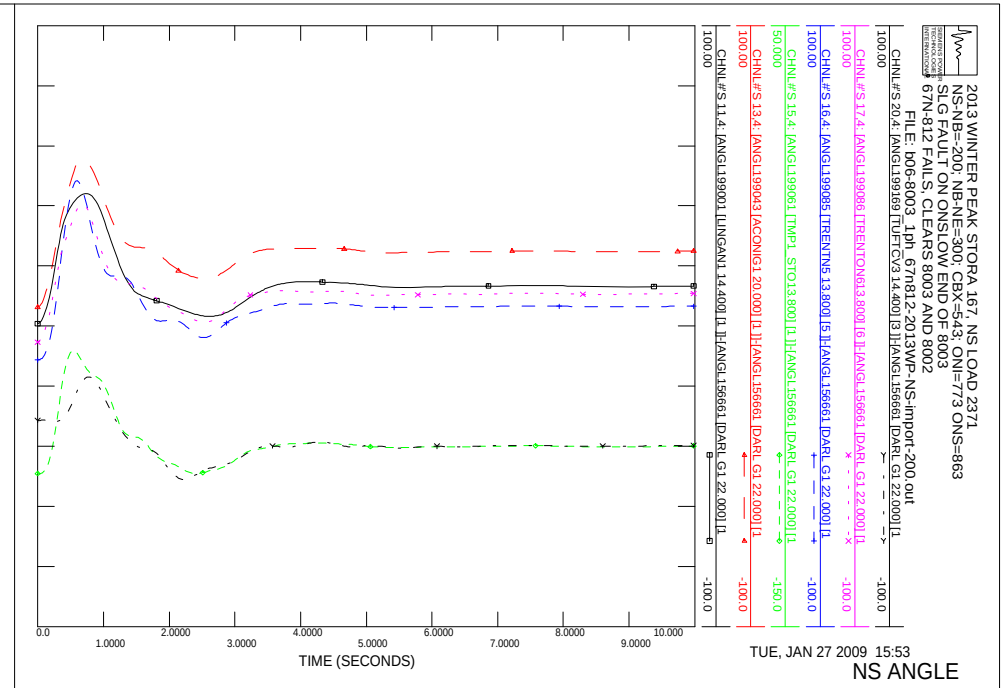
2013 WINTER PEAK STORA 167, NS LOAD 2371
NS-NB=-200; NB-NE=300; CBX=543; ONI=773 ONS=863
SLG FAULT ON ONSLOW END OF 8003
67N-812 FAILS, CLEARS 8003 AND 8002
FILE: b06-8003_1ph_67n812-2013WP-NS-import-200.out
CHNL#S 20,4: [ANGL199169 [TUFTCV3 14.400] [3]]-[ANGL156661 [DARL G1 22.000] [1
CHNL#S 17,4: [ANGL199086 [TRENTON613.800] [6]]-[ANGL156661 [DARL G1 22.000] [1
CHNL#S 16,4: [ANGL199085 [TRENTN5 13.800] [5]]-[ANGL156661 [DARL G1 22.000] [1
CHNL#S 15,4: [ANGL199061 [TMP1 STO13.800] [1]]-[ANGL156661 [DARL G1 22.000] [1
CHNL#S 13,4: [ANGL199043 [ACONIG1 20.000] [1]]-[ANGL156661 [DARL G1 22.000] [1
CHNL#S 11,4: [ANGL199001 [LINGAN1 14.400] [1]]-[ANGL156661 [DARL G1 22.000] [1
TIME (SECONDS)
TUE, JAN 27 2009 15:53
NS ANGLE

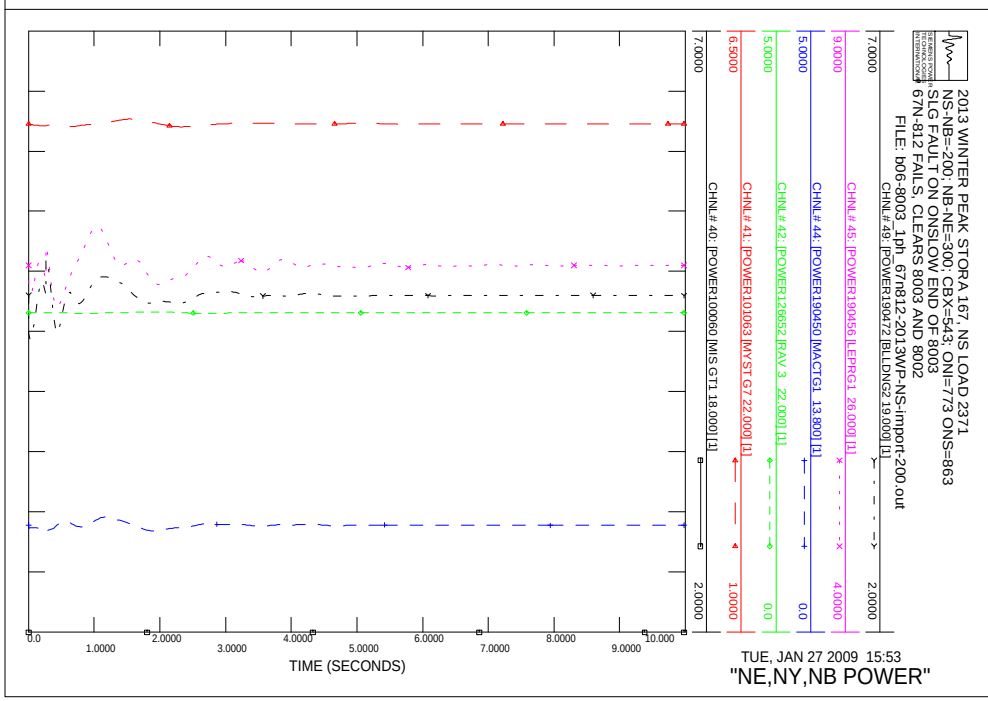
2013 WINTER PEAK STORA 167, NS LOAD 2371
NS-NB=-200; NB-NE=300; CBX=543; ONI=773 ONS=863
SLG FAULT ON ONSLOW END OF 8003
67N-812 FAILS, CLEARS 8003 AND 8002
FILE: b06-8003_1ph_67n812-2013WP-NS-import-200.out
CHNL# 49: [POWER190472 [BLLDNG2 19.000] [1]]
CHNL# 45: [POWER190456 [LEPRG1 26.000] [1]]
CHNL# 44: [POWER190450 [MACTG1 13.800] [1]]
CHNL# 42: [POWER126652 [RAV 3 22.000] [1]]
CHNL# 41: [POWER101063 [MYST G7 22.000] [1]]
CHNL# 40: [POWER100060 [MIS GT1 18.000] [1]]
TIME (SECONDS)
TUE, JAN 27 2009 15:53
"NE,NY,NB POWER"

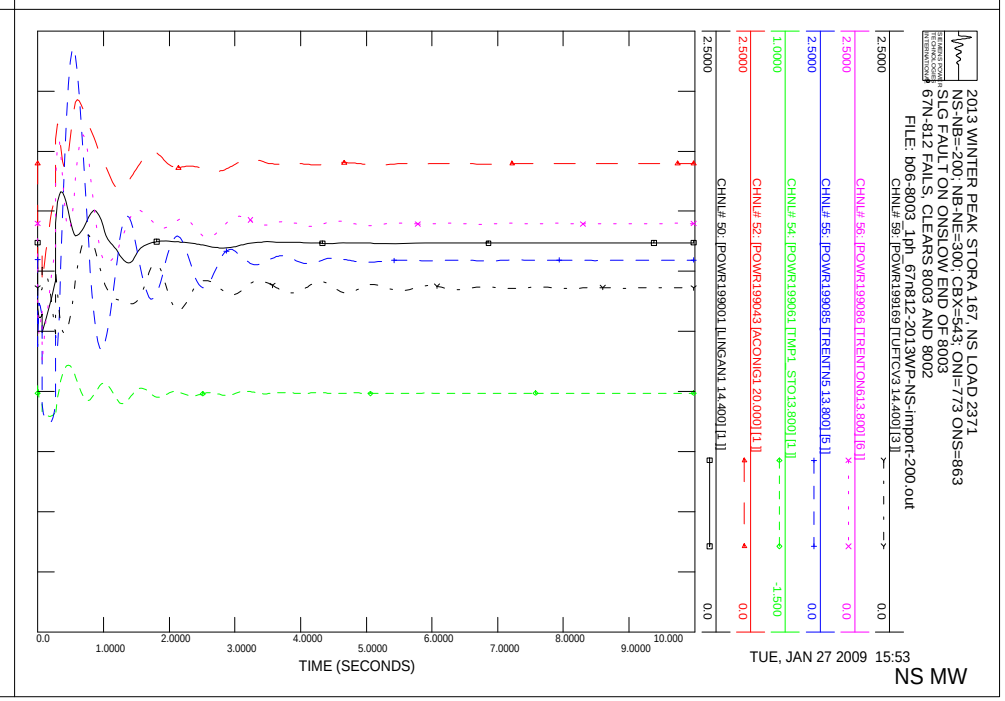
2013 WINTER PEAK STORA 167, NS LOAD 2371
NS-NB=-200; NB-NE=300; CBX=543; ONI=773 ONS=863
SLG FAULT ON ONSLOW END OF 8003
67N-812 FAILS, CLEARS 8003 AND 8002
FILE: b06-8003_1ph_67n812-2013WP-NS-import-200.out
CHNL# 59: [POWR199169 [TUFTCV3 14.400] [3]]
CHNL# 56: [POWR199086 [TRENTON613.800] [6]]
CHNL# 55: [POWR199085 [TRENTN5 13.800] [5]]
CHNL# 54: [POWR199061 [TMP1 STO13.800] [1]]
CHNL# 52: [POWR199043 [ACONIG1 20.000] [1]]
CHNL# 50: [POWR199001 [LINGAN1 14.400] [1]]
TIME (SECONDS)
TUE, JAN 27 2009 15:53
NS MW

2013 WINTER PEAK STORA 167, NS LOAD 2371
NS-NB=-200; NB-NE=300; CBX=543; ONI=773 ONS=863
SLG FAULT ON ONSLOW END OF 8003
67N-812 FAILS, CLEARS 8003 AND 8002
FILE: b06-8003_1ph_67n812-2013WP-NS-import-200.out
CHNL# 119: [VARS IR141-DIGBY]
CHNL# 118: [VARS IR137-STATIA]
CHNL# 117: [VARS IR114-GLENDHU]
CHNL# 116: [VARS IR84-DALHOUSIE]
CHNL# 115: [VARS IR82_NUTTBY]
CHNL# 114: [VARS IR45_AMHERST]
TIME (SECONDS)
TUE, JAN 27 2009 15:53
NS WIND MV

2013 WINTER PEAK STORA 167, NS LOAD 2371
NS-NB=-200; NB-NE=300; CBX=543; ONI=773 ONS=863
SLG FAULT ON ONSLOW END OF 8003
67N-812 FAILS, CLEARS 8003 AND 8002
FILE: b06-8003_1ph_67n812-2013WP-NS-import-200.out
CHNL# 79: [POWER IR141-DIGBY]
CHNL# 78: [POWER IR137-STATIA]
CHNL# 77: [POWER IR114-GLENDHU]
CHNL# 76: [POWER IR84-DALHOUSIE]
CHNL# 75: [POWER IR82_NUTTBY]
CHNL# 74: [POWER IR45_AMHERST]
TIME (SECONDS)
TUE, JAN 27 2009 15:53
NS WIND MW

2013 WINTER PEAK STORA 167, NS LOAD 2371
NS-NB=-200; NB-NE=300; CBX=543; ONI=773 ONS=863
SLG FAULT ON ONSLOW END OF 8003
67N-812 FAILS, CLEARS 8003 AND 8002
FILE: b06-8003_1ph_67n812-2013WP-NS-import-200.out
CHNL# 133: [VOLT199125 [ONSLOW 345.00]]
CHNL# 132: [VOLT199120 [HOPEWELL 345.00]]
CHNL# 131: [VOLT199045 [WOODBINE345.00]]
CHNL# 130: [VOLT190320 [SALBRY 345.00]]
CHNL# 128: [VOLT190004 [KESWICK 345.00]]
CHNL# 127: [VOLT 70002 [ORRINGTN345.00]]
TIME (SECONDS)
TUE, JAN 27 2009 15:53
"345KV VOLTAGE"

2013 WINTER PEAK STORA 167, NS LOAD 2371
NS-NB=-200; NB-NE=300; CBX=543; ONI=773 ONS=863
SLG FAULT ON ONSLOW END OF 8003
67N-812 FAILS, CLEARS 8003 AND 8002
FILE: b06-8003_1ph_67n812-2013WP-NS-import-200.out
CHNL# 125: 60*(1+[FREQ199125 [ONSLOW 345.00]])
CHNL# 124: 60*(1+[FREQ199120 [HOPEWELL 345.00]])
CHNL# 123: 60*(1+[FREQ199045 [WOODBINE345.00]])
CHNL# 122: 60*(1+[FREQ190320 [SALBRY 345.00]])
CHNL# 121: 60*(1+[FREQ190197 [C.COVE 345.00]])
CHNL# 120: 60*(1+[FREQ 70002 [ORRINGTN345.00]])
TIME (SECONDS)
TUE, JAN 27 2009 15:53
FREQUENCY HZ

2013 WINTER PEAK STORA 167, NS LOAD 2371
NS-NB=-200; NB-NE=300; CBX=543; ONI=773 ONS=863
SLG FAULT ON ONSLOW END OF 8003
67N-812 FAILS, CLEARS 8003 AND 8002
FILE: b06-8003_1ph_67n812-2013WP-NS-import-200.out
CHNL# 146: [VOLT199280 [TUSKET A138.00]]
CHNL# 145: [VOLT199193 [HHWAS 138.00]]
CHNL# 144: [VOLT199165 [TUFTCOVE138.00]]
CHNL# 143: [VOLT199138 [SPRNGHILL138.00]]
CHNL# 142: [VOLT199090 [50N-TREN138.00]]
CHNL# 141: [VOLT199051 [HASTINGS138.00]]
TIME (SECONDS)
TUE, JAN 27 2009 15:53
138KV BUS VOLTS

2013 WINTER PEAK STORA 167, NS LOAD 2371
NS-NB=-200; NB-NE=300; CBX=543; ONI=773 ONS=863
SLG FAULT ON ONSLOW END OF 8003
67N-812 FAILS, CLEARS 8003 AND 8002
FILE: b06-8003_1ph_67n812-2013WP-NS-import-200.out
CHNL# 140: [VOLT199240 [BWATER A230.00]]
CHNL# 139: [VOLT199200 [BRUSHY 230.00]]
CHNL# 138: [VOLT199130 [ONSLOW 230.00]]
CHNL# 137: [VOLT199050 [HASTINGS230.00]]
CHNL# 136: [VOLT199044 [PT.ACONI230.00]]
CHNL# 135: [VOLT199000 [LINGAN 230.00]]
TIME (SECONDS)
TUE, JAN 27 2009 15:53
230KV BUS VOLTS

2013 WINTER PEAK STORA 167, NS LOAD 2371
NS-NB=-200; NB-NE=300; CBX=543; ONI=773 ONS=863
SLG FAULT ON ONSLOW END OF 8003
67N-812 FAILS, CLEARS 8003 AND 8002
FILE: b06-8003_1ph_67n812-2013WP-NS-import-200.out
CHNL# 217: [L6533MW]
CHNL# 215: [L6503MW]
CHNL# 197: [L8003MW]
CHNL# 195: [L8004MW]
CHNL# 193: [L8001MW]
CHNL# 221: [L3001MW]
TIME (SECONDS)
TUE, JAN 27 2009 15:53
LINE FLOW MW

2013 WINTER PEAK STORA 167, NS LOAD 2371
NS-NB=-200; NB-NE=300; CBX=543; ONI=773 ONS=863
SLG FAULT ON ONSLOW END OF 8003
67N-812 FAILS, CLEARS 8003 AND 8002
FILE: b06-8003_1ph_67n812-2013WP-NS-import-200.out
CHNL# 154: [IR141-DIGBYH69.0 VOLTS]
CHNL# 153: [IR137-STATIG25.0 VOLTS]
CHNL# 152: [IR114-GLENDH138.0 VOLTS]
CHNL# 151: [IR84-DALHOHV230.0 VOLTS]
CHNL# 150: [IR82_NUTBHV69.0 VOLTS]
CHNL# 149: [IR45_AMHERTP138.0 VOLTS]
TIME (SECONDS)
TUE, JAN 27 2009 15:53
WIND BUS VOLTS

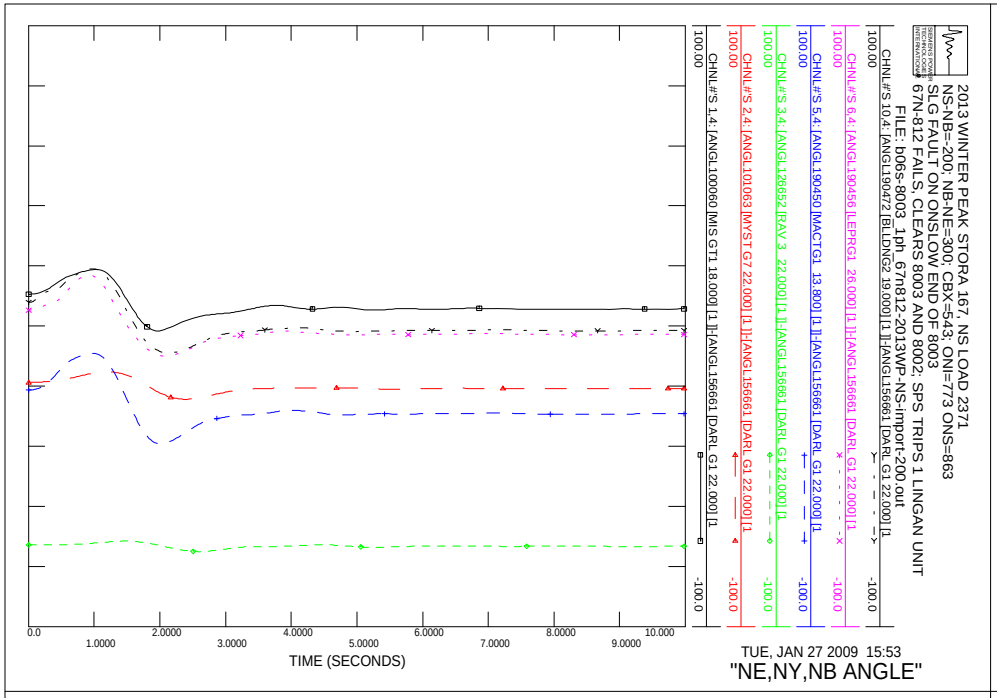
2013 WINTER PEAK STORA 167, NS LOAD 2371
NS-NB=-200; NB-NE=300; CBX=543; ONI=773 ONS=863
SLG FAULT ON ONSLOW END OF 8003
67N-812 FAILS, CLEARS 8003 AND 8002; SPS TRIPS 1 LINGAN UNIT
FILE: b06s-8003_1ph_67n812-2013WP-NS-import-200.out
CHNL#'S 10,4: [ANGL190472 [BLLDNG2 19.000] [1]]-[ANGL156661 [DARL G1 22.000] [1
CHNL#'S 6,4: [ANGL190456 [LEPRG1 26.000] [1]]-[ANGL156661 [DARL G1 22.000] [1
CHNL#'S 5,4: [ANGL190450 [MACTG1 13.800] [1]]-[ANGL156661 [DARL G1 22.000] [1
CHNL#'S 3,4: [ANGL126652 [RAV 3 22.000] [1]]-[ANGL156661 [DARL G1 22.000] [1
CHNL#'S 2,4: [ANGL101063 [MYST G7 22.000] [1]]-[ANGL156661 [DARL G1 22.000] [1
CHNL#'S 1,4: [ANGL100060 [MIS GT1 18.000] [1]]-[ANGL156661 [DARL G1 22.000] [1
TIME (SECONDS)
TUE, JAN 27 2009 15:53
"NE,NY,NB ANGLE"

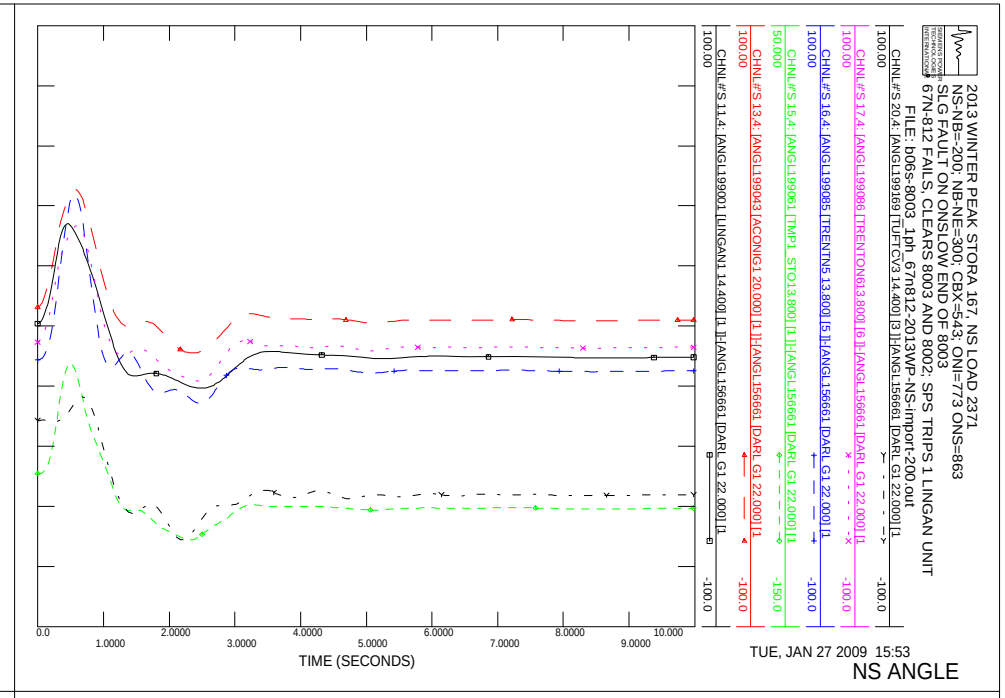
2013 WINTER PEAK STORA 167, NS LOAD 2371
NS-NB=-200; NB-NE=300; CBX=543; ONI=773 ONS=863
SLG FAULT ON ONSLOW END OF 8003
67N-812 FAILS, CLEARS 8003 AND 8002; SPS TRIPS 1 LINGAN UNIT
FILE: b06s-8003_1ph_67n812-2013WP-NS-import-200.out
CHNL#'S 20,4: [ANGL199169 [TUFTCV3 14.400] [3]]-[ANGL156661 [DARL G1 22.000] [1
CHNL#'S 17,4: [ANGL199086 [TRENTON613.800] [6]]-[ANGL156661 [DARL G1 22.000] [1
CHNL#'S 16,4: [ANGL199085 [TRENTN5 13.800] [5]]-[ANGL156661 [DARL G1 22.000] [1
CHNL#'S 15,4: [ANGL199061 [TMP1 STO13.800] [1]]-[ANGL156661 [DARL G1 22.000] [1
CHNL#'S 13,4: [ANGL199043 [ACONIG1 20.000] [1]]-[ANGL156661 [DARL G1 22.000] [1
CHNL#'S 11,4: [ANGL199001 [LINGAN1 14.400] [1]]-[ANGL156661 [DARL G1 22.000] [1
TIME (SECONDS)
TUE, JAN 27 2009 15:53
NS ANGLE

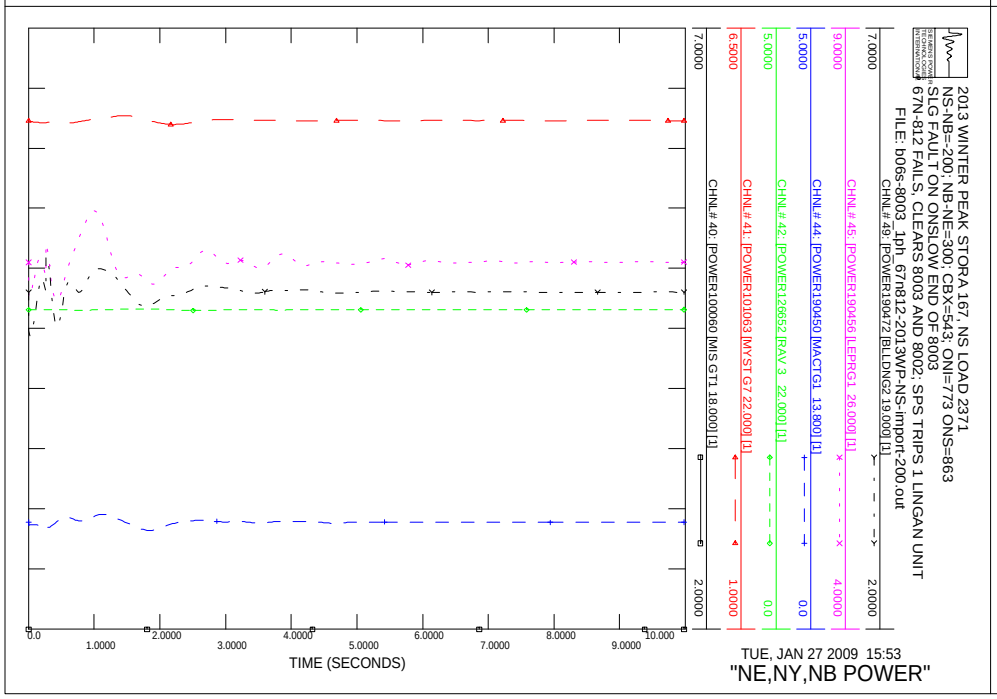
2013 WINTER PEAK STORA 167, NS LOAD 2371
NS-NB=-200; NB-NE=300; CBX=543; ONI=773 ONS=863
SLG FAULT ON ONSLOW END OF 8003
67N-812 FAILS, CLEARS 8003 AND 8002; SPS TRIPS 1 LINGAN UNIT
FILE: b06s-8003_1ph_67n812-2013WP-NS-import-200.out
CHNL# 49: [POWER190472 [BLLDNG2 19.000] [1]]
CHNL# 45: [POWER190456 [LEPRG1 26.000] [1]]
CHNL# 44: [POWER190450 [MACTG1 13.800] [1]]
CHNL# 42: [POWER126652 [RAV 3 22.000] [1]]
CHNL# 41: [POWER101063 [MYST G7 22.000] [1]]
CHNL# 40: [POWER100060 [MIS GT1 18.000] [1]]
TIME (SECONDS)
TUE, JAN 27 2009 15:53
"NE,NY,NB POWER"

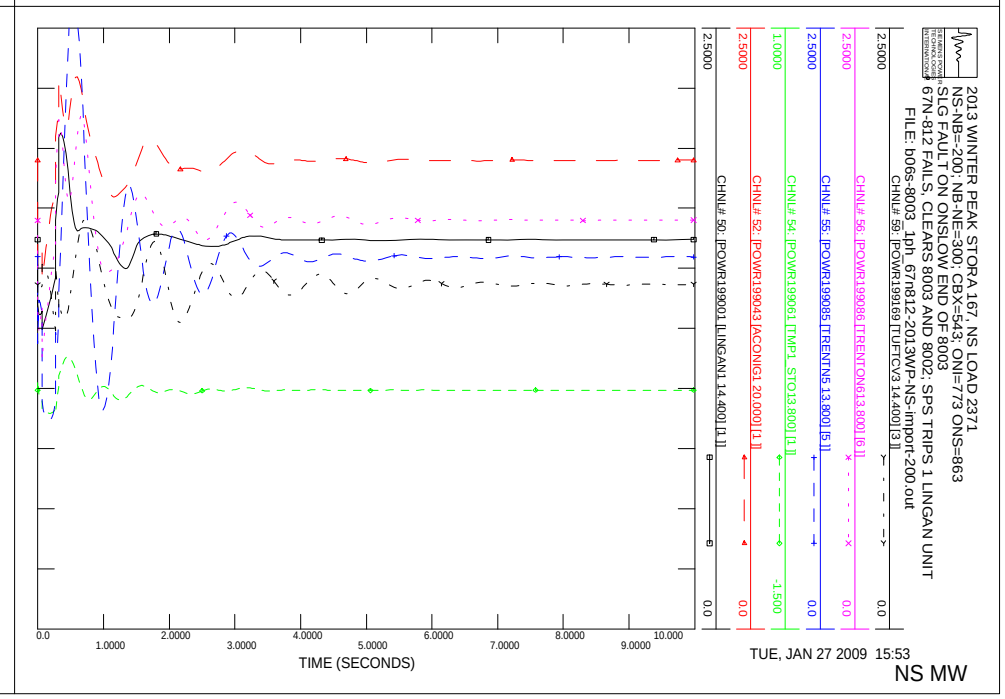
2013 WINTER PEAK STORA 167, NS LOAD 2371
NS-NB=-200; NB-NE=300; CBX=543; ONI=773 ONS=863
SLG FAULT ON ONSLOW END OF 8003
67N-812 FAILS, CLEARS 8003 AND 8002; SPS TRIPS 1 LINGAN UNIT
FILE: b06s-8003_1ph_67n812-2013WP-NS-import-200.out
CHNL# 59: [POWR199169 [TUFTCV3 14.400] [3]]
CHNL# 56: [POWR199086 [TRENTON613.800] [6]]
CHNL# 55: [POWR199085 [TRENTN5 13.800] [5]]
CHNL# 54: [POWR199061 [TMP1 STO13.800] [1]]
CHNL# 52: [POWR199043 [ACONIG1 20.000] [1]]
CHNL# 50: [POWR199001 [LINGAN1 14.400] [1]]
TIME (SECONDS)
TUE, JAN 27 2009 15:53
NS MW

2013 WINTER PEAK STORA 167, NS LOAD 2371
NS-NB=-200; NB-NE=300; CBX=543; ONI=773 ONS=863
SLG FAULT ON ONSLOW END OF 8003
67N-812 FAILS, CLEARS 8003 AND 8002; SPS TRIPS 1 LINGAN UNIT
FILE: b06s-8003_1ph_67n812-2013WP-NS-import-200.out
CHNL# 119: [VARS IR141-DIGBY]
CHNL# 118: [VARS IR137-STATIA]
CHNL# 117: [VARS IR114-GLENDHU]
CHNL# 116: [VARS IR84-DALHOUSIE]
CHNL# 115: [VARS IR82_NUTTBY]
CHNL# 114: [VARS IR45_AMHERST]
0.50000
-0.5000
0.0
1.0000
2.0000
3.0000
4.0000
5.0000
6.0000
7.0000
8.0000
9.0000
10.000
TIME (SECONDS)
TUE, JAN 27 2009 15:53
NS WIND MV

2013 WINTER PEAK STORA 167, NS LOAD 2371
NS-NB=-200; NB-NE=300; CBX=543; ONI=773 ONS=863
SLG FAULT ON ONSLOW END OF 8003
67N-812 FAILS, CLEARS 8003 AND 8002; SPS TRIPS 1 LINGAN UNIT
FILE: b06s-8003_1ph_67n812-2013WP-NS-import-200.out
CHNL# 79: [POWER IR141-DIGBY]
CHNL# 78: [POWER IR137-STATIA]
CHNL# 77: [POWER IR114-GLENDHU]
CHNL# 76: [POWER IR84-DALHOUSIE]
CHNL# 75: [POWER IR82_NUTTBY]
CHNL# 74: [POWER IR45_AMHERST]
1.0000
0.0
1.0000
2.0000
3.0000
4.0000
5.0000
6.0000
7.0000
8.0000
9.0000
10.000
TIME (SECONDS)
TUE, JAN 27 2009 15:53
NS WIND MW

2013 WINTER PEAK STORA 167, NS LOAD 2371
NS-NB=-200; NB-NE=300; CBX=543; ONI=773 ONS=863
SLG FAULT ON ONSLOW END OF 8003
67N-812 FAILS, CLEARS 8003 AND 8002; SPS TRIPS 1 LINGAN UNIT
FILE: b06s-8003_1ph_67n812-2013WP-NS-import-200.out
CHNL# 133: [VOLT199125 [ONSLOW 345.00]]
CHNL# 132: [VOLT199120 [HOPEWELL 345.00]]
CHNL# 131: [VOLT199045 [WOODBINE345.00]]
CHNL# 130: [VOLT190320 [SALBRY 345.00]]
CHNL# 128: [VOLT190004 [KESWICK 345.00]]
CHNL# 127: [VOLT 70002 [ORRINGTN345.00]]
1.1000
0.90000
0.0
1.0000
2.0000
3.0000
4.0000
5.0000
6.0000
7.0000
8.0000
9.0000
10.000
TIME (SECONDS)
TUE, JAN 27 2009 15:53
"345KV VOLTAGE"

2013 WINTER PEAK STORA 167, NS LOAD 2371
NS-NB=-200; NB-NE=300; CBX=543; ONI=773 ONS=863
SLG FAULT ON ONSLOW END OF 8003
67N-812 FAILS, CLEARS 8003 AND 8002; SPS TRIPS 1 LINGAN UNIT
FILE: b06s-8003_1ph_67n812-2013WP-NS-import-200.out
CHNL# 125: 60*(1+[FREQ199125 [ONSLOW 345.00]])
CHNL# 124: 60*(1+[FREQ199120 [HOPEWELL 345.00]])
CHNL# 123: 60*(1+[FREQ199045 [WOODBINE345.00]])
CHNL# 122: 60*(1+[FREQ190320 [SALBRY 345.00]])
CHNL# 121: 60*(1+[FREQ190197 [C.COVE 345.00]])
CHNL# 120: 60*(1+[FREQ 70002 [ORRINGTN345.00]])
60.500
59.500
0.0
1.0000
2.0000
3.0000
4.0000
5.0000
6.0000
7.0000
8.0000
9.0000
10.000
TIME (SECONDS)
TUE, JAN 27 2009 15:53
FREQUENCY HZ

2013 WINTER PEAK STORA 167, NS LOAD 2371
NS-NB=-200; NB-NE=300; CBX=543; ONI=773 ONS=863
SLG FAULT ON ONSLOW END OF 8003
67N-812 FAILS, CLEARS 8003 AND 8002; SPS TRIPS 1 LINGAN UNIT
FILE: b06s-8003_1ph_67n812-2013WP-NS-import-200.out
CHNL# 146: [VOLT199280 [TUSKET A138.00]]
CHNL# 145: [VOLT199193 [HHWAS 138.00]]
CHNL# 144: [VOLT199165 [TUFTCOVE138.00]]
CHNL# 143: [VOLT199135 [SPRNGHLL138.00]]
CHNL# 142: [VOLT199090 [50N-TREN138.00]]
CHNL# 141: [VOLT199051 [HASTINGS138.00]]
1.2000
0.70000
0.0
1.0000
2.0000
3.0000
4.0000
5.0000
6.0000
7.0000
8.0000
9.0000
10.000
TIME (SECONDS)
TUE, JAN 27 2009 15:53
138KV BUS VOLTS

2013 WINTER PEAK STORA 167, NS LOAD 2371
NS-NB=-200; NB-NE=300; CBX=543; ONI=773 ONS=863
SLG FAULT ON ONSLOW END OF 8003
67N-812 FAILS, CLEARS 8003 AND 8002; SPS TRIPS 1 LINGAN UNIT
FILE: b06s-8003_1ph_67n812-2013WP-NS-import-200.out
CHNL# 140: [VOLT199240 [BWATER A230.00]]
CHNL# 139: [VOLT199200 [BRUSHY 230.00]]
CHNL# 138: [VOLT199130 [ONSLOW 230.00]]
CHNL# 137: [VOLT199050 [HASTINGS230.00]]
CHNL# 136: [VOLT199044 [PT.ACONI230.00]]
CHNL# 135: [VOLT199000 [LINGAN 230.00]]
1.2000
0.70000
0.0
1.0000
2.0000
3.0000
4.0000
5.0000
6.0000
7.0000
8.0000
9.0000
10.000
TIME (SECONDS)
TUE, JAN 27 2009 15:53
230KV BUS VOLTS

2013 WINTER PEAK STORA 167, NS LOAD 2371
NS-NB=-200; NB-NE=300; CBX=543; ONI=773 ONS=863
SLG FAULT ON ONSLOW END OF 8003
67N-812 FAILS, CLEARS 8003 AND 8002; SPS TRIPS 1 LINGAN UNIT
FILE: b06s-8003_1ph_67n812-2013WP-NS-import-200.out
CHNL# 217: [L6513NMW]
CHNL# 215: [L6503MW]
CHNL# 197: [L8003MW]
CHNL# 195: [L8004MW]
CHNL# 193: [L8001MW]
CHNL# 221: [L3001MW]
250.00
500.00
1000.0
0.0
-250.0
-1000.
0.0
1.0000
2.0000
3.0000
4.0000
5.0000
6.0000
7.0000
8.0000
9.0000
10.000
TIME (SECONDS)
TUE, JAN 27 2009 15:53
LINE FLOW MW

2013 WINTER PEAK STORA 167, NS LOAD 2371
NS-NB=-200; NB-NE=300; CBX=543; ONI=773 ONS=863
SLG FAULT ON ONSLOW END OF 8003
67N-812 FAILS, CLEARS 8003 AND 8002; SPS TRIPS 1 LINGAN UNIT
FILE: b06s-8003_1ph_67n812-2013WP-NS-import-200.out
CHNL# 154: [IR141-DIGBYH69.0 VOLTS]
CHNL# 153: [IR137-STATIG25.0 VOLTS]
CHNL# 152: [IR114-GLENDH138.0 VOLTS]
CHNL# 151: [IR84-DALHOHV230.0 VOLTS]
CHNL# 150: [IR82_NUTBHV69.0 VOLTS]
CHNL# 149: [IR45_AMHERTP138.0 VOLTS]
1.2000
0.70000
0.0
1.0000
2.0000
3.0000
4.0000
5.0000
6.0000
7.0000
8.0000
9.0000
10.000
TIME (SECONDS)
TUE, JAN 27 2009 15:53
WIND BUS VOLTS

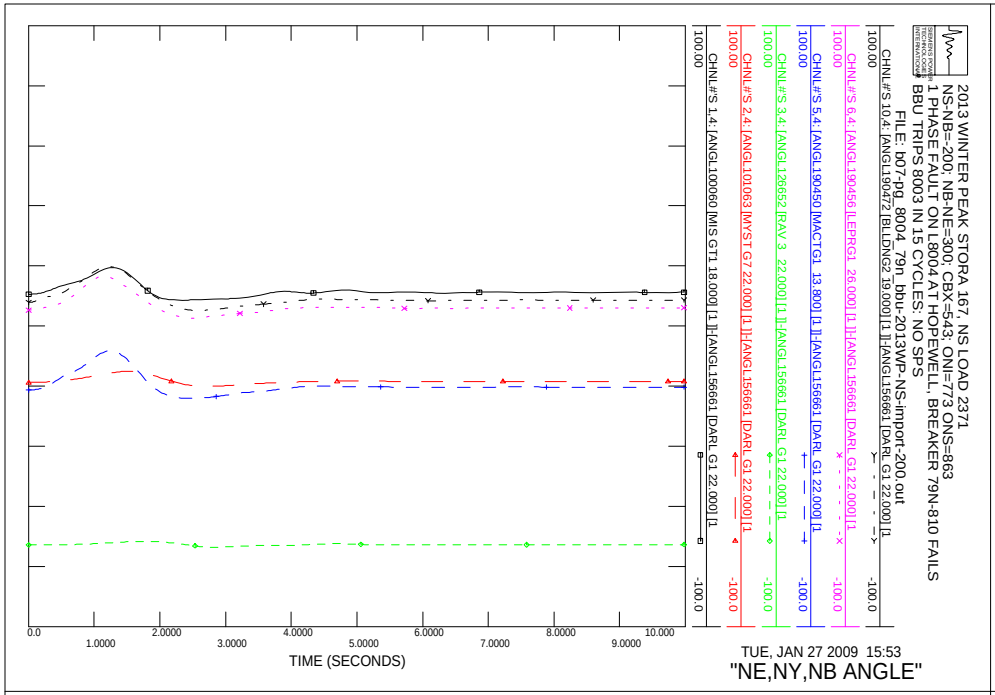
2013 WINTER PEAK STORA 167, NS LOAD 2371
NS-NB=-200; NB-NE=300; CBX=543; ONI=773 ONS=863
1 PHASE FAULT ON L8004 AT HOPEWELL, BREAKER 79N-810 FAILS
BBU TRIPS 8003 IN 15 CYCLES: NO SPS
FILE: b07-pg_8004_79n_bbu-2013WP-NS-import-200.out
CHNL#'S 10,4: [ANGL190472 [BLLDNG2 19.000] [1]]-[ANGL156661 [DARL G1 22.000] [1
CHNL#'S 6,4: [ANGL190456 [LEPRG1 26.000] [1]]-[ANGL156661 [DARL G1 22.000] [1
CHNL#'S 5,4: [ANGL190450 [MACTG1 13.800] [1]]-[ANGL156661 [DARL G1 22.000] [1
CHNL#'S 3,4: [ANGL126652 [RAV 3 22.000] [1]]-[ANGL156661 [DARL G1 22.000] [1
CHNL#'S 2,4: [ANGL101063 [MYST G7 22.000] [1]]-[ANGL156661 [DARL G1 22.000] [1
CHNL#'S 1,4: [ANGL100060 [MIS GT1 18.000] [1]]-[ANGL156661 [DARL G1 22.000] [1
TIME (SECONDS)
TUE, JAN 27 2009 15:53
"NE,NY,NB ANGLE"

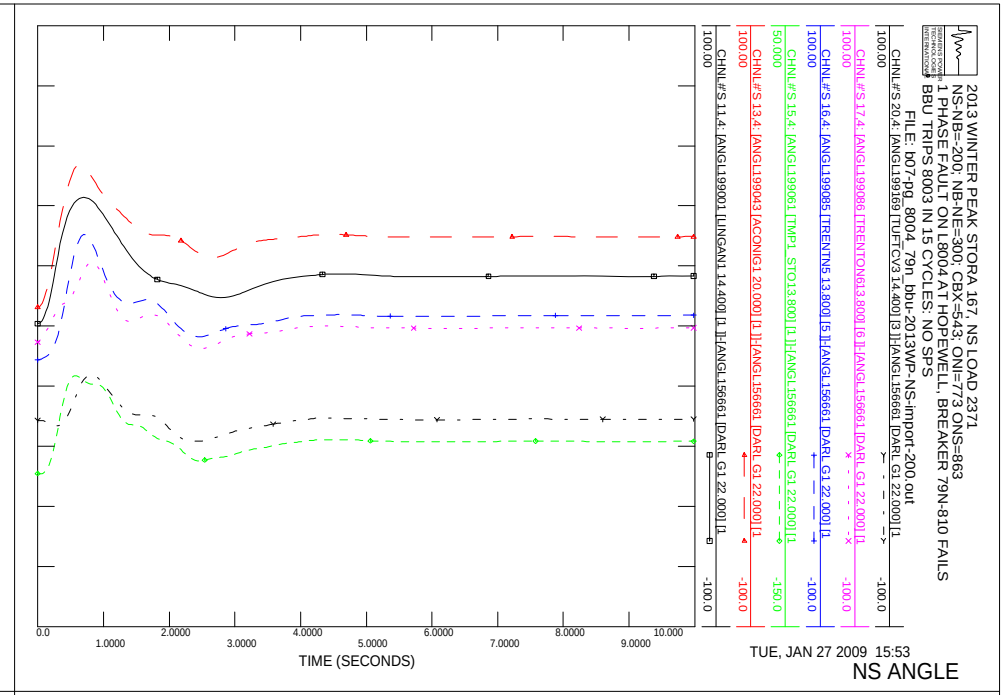
2013 WINTER PEAK STORA 167, NS LOAD 2371
NS-NB=-200; NB-NE=300; CBX=543; ONI=773 ONS=863
1 PHASE FAULT ON L8004 AT HOPEWELL, BREAKER 79N-810 FAILS
BBU TRIPS 8003 IN 15 CYCLES: NO SPS
FILE: b07-pg_8004_79n_bbu-2013WP-NS-import-200.out
CHNL#'S 20,4: [ANGL199169 [TUFTCV3 14.400] [3]]-[ANGL156661 [DARL G1 22.000] [1
CHNL#'S 17,4: [ANGL199086 [TRENTON613.800] [6]]-[ANGL156661 [DARL G1 22.000] [1
CHNL#'S 16,4: [ANGL199085 [TRENTN5 13.800] [5]]-[ANGL156661 [DARL G1 22.000] [1
CHNL#'S 15,4: [ANGL199061 [TMP1 STO13.800] [1]]-[ANGL156661 [DARL G1 22.000] [1
CHNL#'S 13,4: [ANGL199043 [ACONIG1 20.000] [1]]-[ANGL156661 [DARL G1 22.000] [1
CHNL#'S 11,4: [ANGL199001 [LINGAN1 14.400] [1]]-[ANGL156661 [DARL G1 22.000] [1
TIME (SECONDS)
TUE, JAN 27 2009 15:53
NS ANGLE

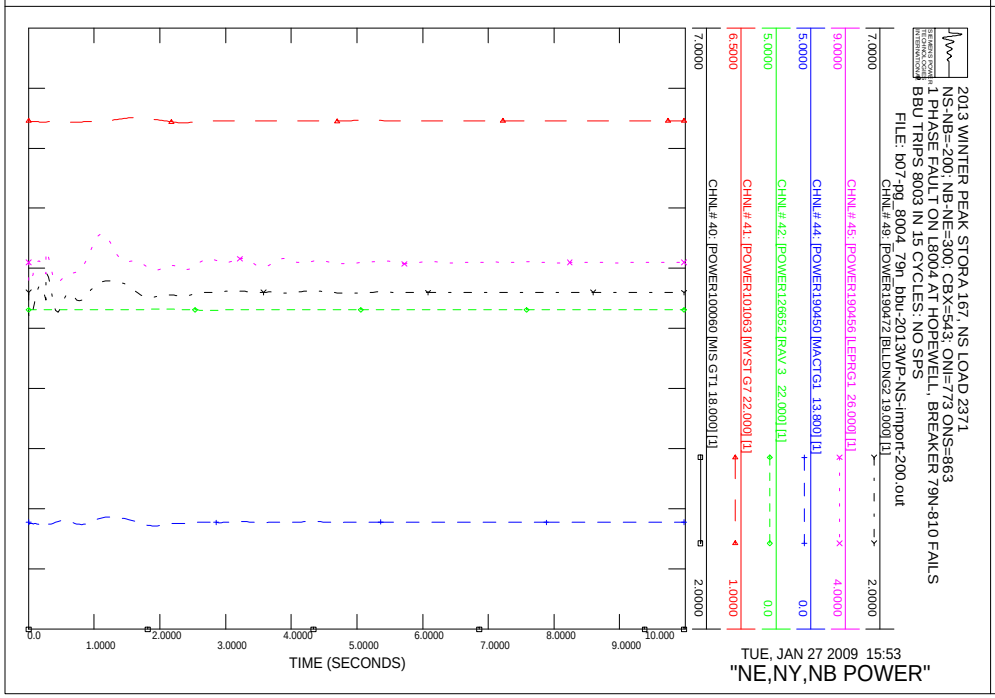
2013 WINTER PEAK STORA 167, NS LOAD 2371
NS-NB=-200; NB-NE=300; CBX=543; ONI=773 ONS=863
1 PHASE FAULT ON L8004 AT HOPEWELL, BREAKER 79N-810 FAILS
BBU TRIPS 8003 IN 15 CYCLES: NO SPS
FILE: b07-pg_8004_79n_bbu-2013WP-NS-import-200.out
CHNL# 49: [POWER190472 [BLLDNG2 19.000] [1]]
CHNL# 45: [POWER190456 [LEPRG1 26.000] [1]]
CHNL# 44: [POWER190450 [MACTG1 13.800] [1]]
CHNL# 42: [POWER126652 [RAV 3 22.000] [1]]
CHNL# 41: [POWER101063 [MYST G7 22.000] [1]]
CHNL# 40: [POWER100060 [MIS GT1 18.000] [1]]
TIME (SECONDS)
TUE, JAN 27 2009 15:53
"NE,NY,NB POWER"

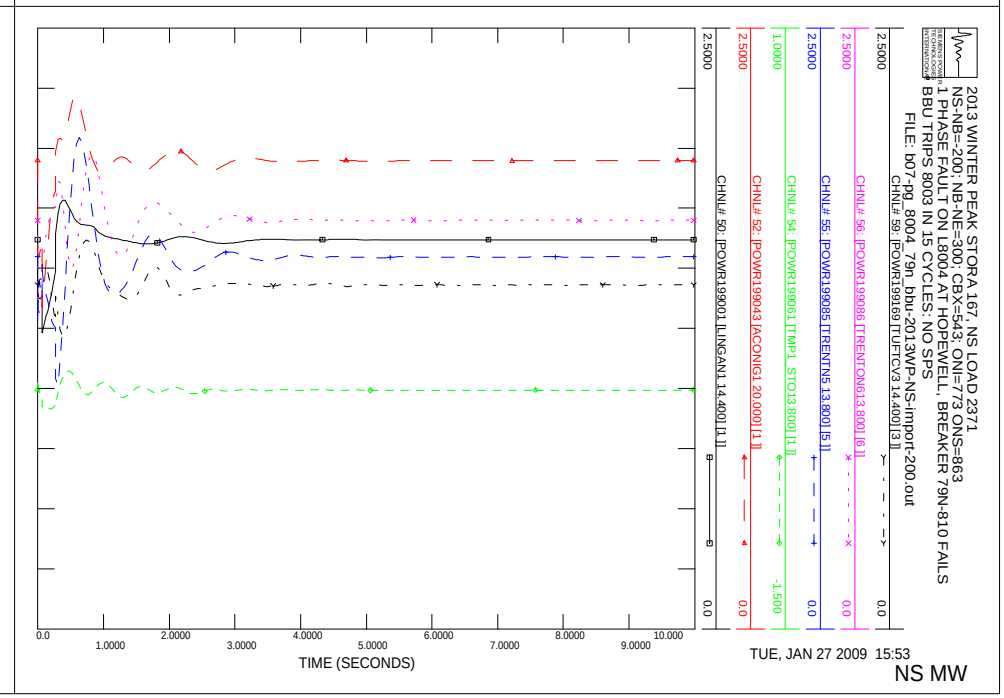
2013 WINTER PEAK STORA 167, NS LOAD 2371
NS-NB=-200; NB-NE=300; CBX=543; ONI=773 ONS=863
1 PHASE FAULT ON L8004 AT HOPEWELL, BREAKER 79N-810 FAILS
BBU TRIPS 8003 IN 15 CYCLES: NO SPS
FILE: b07-pg_8004_79n_bbu-2013WP-NS-import-200.out
CHNL# 59: [POWR199169 [TUFTCV3 14.400] [3]]
CHNL# 56: [POWR199086 [TRENTON613.800] [6]]
CHNL# 55: [POWR199085 [TRENTN5 13.800] [5]]
CHNL# 54: [POWR199061 [TMP1 STO13.800] [1]]
CHNL# 52: [POWR199043 [ACONIG1 20.000] [1]]
CHNL# 50: [POWR199001 [LINGAN1 14.400] [1]]
TIME (SECONDS)
TUE, JAN 27 2009 15:53
NS MW

2013 WINTER PEAK STORA 167, NS LOAD 2371
NS-NB=-200; NB-NE=300; CBX=543; ONI=773 ONS=863
1 PHASE FAULT ON L8004 AT HOPEWELL, BREAKER 79N-810 FAILS
BBU TRIPS 8003 IN 15 CYCLES: NO SPS
FILE: b07-pg_8004_79n_bbu-2013WP-NS-import-200.out
CHNL# 119: [VARS IR141-DIGBY]
CHNL# 118: [VARS IR137-STATIA]
CHNL# 117: [VARS IR114-GLENDHU]
CHNL# 116: [VARS IR84-DALHOUSIE]
CHNL# 115: [VARS IR82_NUTTBY]
CHNL# 114: [VARS IR45_AMHERST]
TIME (SECONDS)
TUE, JAN 27 2009 15:53
NS WIND MV

2013 WINTER PEAK STORA 167, NS LOAD 2371
NS-NB=-200; NB-NE=300; CBX=543; ONI=773 ONS=863
1 PHASE FAULT ON L8004 AT HOPEWELL, BREAKER 79N-810 FAILS
BBU TRIPS 8003 IN 15 CYCLES: NO SPS
FILE: b07-pg_8004_79n_bbu-2013WP-NS-import-200.out
CHNL# 79: [POWER IR141-DIGBY]
CHNL# 78: [POWER IR137-STATIA]
CHNL# 77: [POWER IR114-GLENDHU]
CHNL# 76: [POWER IR84-DALHOUSIE]
CHNL# 75: [POWER IR82_NUTTBY]
CHNL# 74: [POWER IR45_AMHERST]
TIME (SECONDS)
TUE, JAN 27 2009 15:53
NS WIND MW

2013 WINTER PEAK STORA 167, NS LOAD 2371
NS-NB=-200; NB-NE=300; CBX=543; ONI=773 ONS=863
1 PHASE FAULT ON L8004 AT HOPEWELL, BREAKER 79N-810 FAILS
BBU TRIPS 8003 IN 15 CYCLES: NO SPS
FILE: b07-pg_8004_79n_bbu-2013WP-NS-import-200.out
CHNL# 133: [VOLT199125 [ONSLOW 345.00]]
CHNL# 132: [VOLT199120 [HOPEWELL 345.00]]
CHNL# 131: [VOLT199045 [WOODBINE345.00]]
CHNL# 130: [VOLT190320 [SALBRY 345.00]]
CHNL# 128: [VOLT190004 [KESWICK 345.00]]
CHNL# 127: [VOLT 70002 [ORRINGTN345.00]]
TIME (SECONDS)
TUE, JAN 27 2009 15:53
"345KV VOLTAGE"

2013 WINTER PEAK STORA 167, NS LOAD 2371
NS-NB=-200; NB-NE=300; CBX=543; ONI=773 ONS=863
1 PHASE FAULT ON L8004 AT HOPEWELL, BREAKER 79N-810 FAILS
BBU TRIPS 8003 IN 15 CYCLES: NO SPS
FILE: b07-pg_8004_79n_bbu-2013WP-NS-import-200.out
CHNL# 125: 60*(1+[FREQ199125 [ONSLOW 345.00]])
CHNL# 124: 60*(1+[FREQ199120 [HOPEWELL 345.00]])
CHNL# 123: 60*(1+[FREQ199045 [WOODBINE345.00]])
CHNL# 122: 60*(1+[FREQ190320 [SALBRY 345.00]])
CHNL# 121: 60*(1+[FREQ190197 [C.COVE 345.00]])
CHNL# 120: 60*(1+[FREQ 70002 [ORRINGTN345.00]])
TIME (SECONDS)
TUE, JAN 27 2009 15:53
FREQUENCY HZ

2013 WINTER PEAK STORA 167, NS LOAD 2371
NS-NB=-200; NB-NE=300; CBX=543; ONI=773 ONS=863
1 PHASE FAULT ON L8004 AT HOPEWELL. BREAKER 79N-810 FAILS
BBU TRIPS 8003 IN 15 CYCLES: NO SPS
FILE: b07-pg_8004_79n_bbu-2013WP-NS-import-200.out
CHNL# 146: [VOLT199280 [TUSKET A138.00]]
CHNL# 145: [VOLT199193 [HHWAS 138.00]]
CHNL# 144: [VOLT199165 [TUFTCOVE138.00]]
CHNL# 143: [VOLT199135 [SPRNGHLL138.00]]
CHNL# 142: [VOLT199090 [50N-TREN138.00]]
CHNL# 141: [VOLT199051 [HASTINGS138.00]]
TUE, JAN 27 2009 15:53
138KV BUS VOLTS
TIME (SECONDS)

2013 WINTER PEAK STORA 167, NS LOAD 2371
NS-NB=-200; NB-NE=300; CBX=543; ONI=773 ONS=863
1 PHASE FAULT ON L8004 AT HOPEWELL. BREAKER 79N-810 FAILS
BBU TRIPS 8003 IN 15 CYCLES: NO SPS
FILE: b07-pg_8004_79n_bbu-2013WP-NS-import-200.out
CHNL# 140: [VOLT199240 [BWATER A230.00]]
CHNL# 139: [VOLT199200 [BRUSHY 230.00]]
CHNL# 138: [VOLT199130 [ONSLOW 230.00]]
CHNL# 137: [VOLT199050 [HASTINGS230.00]]
CHNL# 136: [VOLT199044 [PT.ACONI230.00]]
CHNL# 135: [VOLT199000 [LINGAN 230.00]]
TUE, JAN 27 2009 15:53
230KV BUS VOLTS
TIME (SECONDS)

2013 WINTER PEAK STORA 167, NS LOAD 2371
NS-NB=-200; NB-NE=300; CBX=543; ONI=773 ONS=863
1 PHASE FAULT ON L8004 AT HOPEWELL. BREAKER 79N-810 FAILS
BBU TRIPS 8003 IN 15 CYCLES: NO SPS
FILE: b07-pg_8004_79n_bbu-2013WP-NS-import-200.out
CHNL# 217: [L6533MW]
CHNL# 215: [L6503MW]
CHNL# 197: [L8003MW]
CHNL# 195: [L8004MW]
CHNL# 193: [L8001MW]
CHNL# 221: [L3001MW]
TUE, JAN 27 2009 15:53
LINE FLOW MW
TIME (SECONDS)

2013 WINTER PEAK STORA 167, NS LOAD 2371
NS-NB=-200; NB-NE=300; CBX=543; ONI=773 ONS=863
1 PHASE FAULT ON L8004 AT HOPEWELL. BREAKER 79N-810 FAILS
BBU TRIPS 8003 IN 15 CYCLES: NO SPS
FILE: b07-pg_8004_79n_bbu-2013WP-NS-import-200.out
CHNL# 154: [IR141-DIGBYH69.0 VOLTS]
CHNL# 153: [IR137-STATIG25.0 VOLTS]
CHNL# 152: [IR114-GLENDH138.0 VOLTS]
CHNL# 151: [IR84-DALHOHV230.0 VOLTS]
CHNL# 150: [IR82_NUTBHV69.0 VOLTS]
CHNL# 149: [IR45_AMHERTP138.0 VOLTS]
TUE, JAN 27 2009 15:53
WIND BUS VOLTS
TIME (SECONDS)

2013 WINTER PEAK STORA 167, NS LOAD 2371
NS-NB=-200; NB-NE=300; CBX=543; ONI=773 ONS=863
1 PHASE FAULT ON L8004 AT HOPEWELL BREAKER 79N-810 FAILS
BBU TRIPS 8003 IN 15 CYCLES: SPS DROPS LINGAN UNIT 2
FILE: b07s-pg_8004_79n_bbu-2013WP-NS-import-200.out
CHNL# 20: [ANGL199169 [TUFTCV3 14.400] [3]] [ANGL156661 [DARL G1 22.000] [1]
CHNL# 17: [ANGL199086 [TRENTON6613.8001 [6]] [ANGL156661 [DARL G1 22.000] [1]
CHNL# 16: [ANGL199085 [TRENTN5 13.800] [5]] [ANGL156661 [DARL G1 22.000] [1]
CHNL# 15: [ANGL199061 [TMP1 STO13.8001 [1]] [ANGL156661 [DARL G1 22.000] [1]
CHNL# 13: [ANGL199043 [ACONIG1 20.000] [1]] [ANGL156661 [DARL G1 22.000] [1]
CHNL# 11: [ANGL199001 [LINGAN1 14.400] [1]] [ANGL156661 [DARL G1 22.000] [1]
TIME (SECONDS)
TUE, JAN 27 2009 15:53
NS ANGLE

2013 WINTER PEAK STORA 167, NS LOAD 2371
NS-NB=-200; NB-NE=300; CBX=543; ONI=773 ONS=863
1 PHASE FAULT ON L8004 AT HOPEWELL BREAKER 79N-810 FAILS
BBU TRIPS 8003 IN 15 CYCLES: SPS DROPS LINGAN UNIT 2
FILE: b07s-pg_8004_79n_bbu-2013WP-NS-import-200.out
CHNL# 10: [ANGL190472 [BLLDNG2 19.000] [1]] [ANGL156661 [DARL G1 22.000] [1]
CHNL# 6: [ANGL190456 [LEPRG1 26.000] [1]] [ANGL156661 [DARL G1 22.000] [1]
CHNL# 5: [ANGL190450 [MACTG1 13.800] [1]] [ANGL156661 [DARL G1 22.000] [1]
CHNL# 3: [ANGL126652 [RAV 3 22.000] [1]] [ANGL156661 [DARL G1 22.000] [1]
CHNL# 2: [ANGL101063 [MYST G7 22.000] [1]] [ANGL156661 [DARL G1 22.000] [1]
CHNL# 1: [ANGL100060 [MIS GT1 18.000] [1]] [ANGL156661 [DARL G1 22.000] [1]
TIME (SECONDS)
TUE, JAN 27 2009 15:53
"NE,NY,NB ANGLE"

2013 WINTER PEAK STORA 167, NS LOAD 2371
NS-NB=-200; NB-NE=300; CBX=543; ONI=773 ONS=863
1 PHASE FAULT ON L8004 AT HOPEWELL BREAKER 79N-810 FAILS
BBU TRIPS 8003 IN 15 CYCLES: SPS DROPS LINGAN UNIT 2
FILE: b07s-pg_8004_79n_bbu-2013WP-NS-import-200.out
CHNL# 59: [POWR199169 [TUFTCV3 14.400] [3]]
CHNL# 56: [POWR199086 [TRENTON6613.8001 [6]]
CHNL# 55: [POWR199085 [TRENTN5 13.800] [5]]
CHNL# 54: [POWR199061 [TMP1 STO13.8001 [1]]
CHNL# 52: [POWR199043 [ACONIG1 20.000] [1]]
CHNL# 50: [POWR199001 [LINGAN1 14.400] [1]]
TIME (SECONDS)
TUE, JAN 27 2009 15:53
NS MW

2013 WINTER PEAK STORA 167, NS LOAD 2371
NS-NB=-200; NB-NE=300; CBX=543; ONI=773 ONS=863
1 PHASE FAULT ON L8004 AT HOPEWELL BREAKER 79N-810 FAILS
BBU TRIPS 8003 IN 15 CYCLES: SPS DROPS LINGAN UNIT 2
FILE: b07s-pg_8004_79n_bbu-2013WP-NS-import-200.out
CHNL# 49: [POWER190472 [BLLDNG2 19.000] [1]]
CHNL# 45: [POWER190456 [LEPRG1 26.000] [1]]
CHNL# 44: [POWER190450 [MACTG1 13.800] [1]]
CHNL# 42: [POWER126652 [RAV 3 22.000] [1]]
CHNL# 41: [POWER101063 [MYST G7 22.000] [1]]
CHNL# 40: [POWER100060 [MIS GT1 18.000] [1]]
TIME (SECONDS)
TUE, JAN 27 2009 15:53
"NE,NY,NB POWER"

2013 WINTER PEAK STORA 167, NS LOAD 2371
NS-NB=-200; NB-NE=300; CBX=543; ONI=773 ONS=863
1 PHASE FAULT ON L8004 AT HOPEWELL BREAKER 79N-810 FAILS
BBU TRIPS 8003 IN 15 CYCLES: SPS DROPS LINGAN UNIT 2
FILE: b07s-pg_8004_79n_bbu-2013WP-NS-import-200.out
CHNL# 119: [VARS IR141-DIGBY]
CHNL# 118: [VARS IR137-STATIA]
CHNL# 117: [VARS IR114-GLENDHU]
CHNL# 116: [VARS IR84-DALHOUSIE]
CHNL# 115: [VARS IR82_NUTTBY]
CHNL# 114: [VARS IR45_AMHERST]
0.50000
-0.5000
0.0
1.0000
2.0000
3.0000
4.0000
5.0000
6.0000
7.0000
8.0000
9.0000
10.000
TIME (SECONDS)
TUE, JAN 27 2009 15:53
NS WIND MV

2013 WINTER PEAK STORA 167, NS LOAD 2371
NS-NB=-200; NB-NE=300; CBX=543; ONI=773 ONS=863
1 PHASE FAULT ON L8004 AT HOPEWELL BREAKER 79N-810 FAILS
BBU TRIPS 8003 IN 15 CYCLES: SPS DROPS LINGAN UNIT 2
FILE: b07s-pg_8004_79n_bbu-2013WP-NS-import-200.out
CHNL# 79: [POWER IR141-DIGBY]
CHNL# 78: [POWER IR137-STATIA]
CHNL# 77: [POWER IR114-GLENDHU]
CHNL# 76: [POWER IR84-DALHOUSIE]
CHNL# 75: [POWER IR82_NUTTBY]
CHNL# 74: [POWER IR45_AMHERST]
1.0000
0.0
1.0000
2.0000
3.0000
4.0000
5.0000
6.0000
7.0000
8.0000
9.0000
10.000
TIME (SECONDS)
TUE, JAN 27 2009 15:53
NS WIND MW

2013 WINTER PEAK STORA 167, NS LOAD 2371
NS-NB=-200; NB-NE=300; CBX=543; ONI=773 ONS=863
1 PHASE FAULT ON L8004 AT HOPEWELL BREAKER 79N-810 FAILS
BBU TRIPS 8003 IN 15 CYCLES: SPS DROPS LINGAN UNIT 2
FILE: b07s-pg_8004_79n_bbu-2013WP-NS-import-200.out
CHNL# 133: [VOLT199125 IONSLOW 345.00]
CHNL# 132: [VOLT199120 IHOPEWELL345.00]
CHNL# 131: [VOLT199045 IWOODBINE345.00]
CHNL# 130: [VOLT190320 ISALBRY 345.00]
CHNL# 128: [VOLT190004 IKESWICK 345.00]
CHNL# 127: [VOLT 70002 IORRINGTN345.00]
1.1000
0.90000
0.0
1.0000
2.0000
3.0000
4.0000
5.0000
6.0000
7.0000
8.0000
9.0000
10.000
TIME (SECONDS)
TUE, JAN 27 2009 15:53
"345KV VOLTAGE"

2013 WINTER PEAK STORA 167, NS LOAD 2371
NS-NB=-200; NB-NE=300; CBX=543; ONI=773 ONS=863
1 PHASE FAULT ON L8004 AT HOPEWELL BREAKER 79N-810 FAILS
BBU TRIPS 8003 IN 15 CYCLES: SPS DROPS LINGAN UNIT 2
FILE: b07s-pg_8004_79n_bbu-2013WP-NS-import-200.out
CHNL# 125: 60*(1+[FREQ199125 IONSLOW 345.00])
CHNL# 124: 60*(1+[FREQ199120 IHOPEWELL345.00])
CHNL# 123: 60*(1+[FREQ199045 IWOODBINE345.00])
CHNL# 122: 60*(1+[FREQ190320 ISALBRY 345.00])
CHNL# 121: 60*(1+[FREQ190197 IC.COVE 345.00])
CHNL# 120: 60*(1+[FREQ 70002 IORRINGTN345.00])
60.500
59.500
0.0
1.0000
2.0000
3.0000
4.0000
5.0000
6.0000
7.0000
8.0000
9.0000
10.000
TIME (SECONDS)
TUE, JAN 27 2009 15:53
FREQUENCY HZ

2013 WINTER PEAK STORA 167, NS LOAD 2371
NS-NB=-200; NB-NE=300; CBX=543; ONI=773 ONS=863
1 PHASE FAULT ON L8004 AT HOPEWELL BREAKER 79N-810 FAILS
BBU TRIPS 8003 IN 15 CYCLES: SPS DROPS LINGAN UNIT 2
FILE: b07s-pg_8004_79n_bbu-2013WP-NS-import-200.out
CHNL# 146: [VOLT199280 [TUSKET A138.00]]
CHNL# 145: [VOLT199193 [HHWAS 138.00]]
CHNL# 144: [VOLT199165 [TUFTCOVE138.00]]
CHNL# 143: [VOLT199138 [SPRNGHILL138.00]]
CHNL# 142: [VOLT199090 [50N-TREN138.00]]
CHNL# 141: [VOLT199051 [HASTINGS138.00]]
1.2000
0.70000
0.0
1.0000
2.0000
3.0000
4.0000
5.0000
6.0000
7.0000
8.0000
9.0000
10.000
TIME (SECONDS)
TUE, JAN 27 2009 15:53
138KV BUS VOLTS

2013 WINTER PEAK STORA 167, NS LOAD 2371
NS-NB=-200; NB-NE=300; CBX=543; ONI=773 ONS=863
1 PHASE FAULT ON L8004 AT HOPEWELL BREAKER 79N-810 FAILS
BBU TRIPS 8003 IN 15 CYCLES: SPS DROPS LINGAN UNIT 2
FILE: b07s-pg_8004_79n_bbu-2013WP-NS-import-200.out
CHNL# 140: [VOLT199240 [BWATER A230.00]]
CHNL# 139: [VOLT199200 [BRUSHY 230.00]]
CHNL# 138: [VOLT199130 [ONSLOW 230.00]]
CHNL# 137: [VOLT199050 [HASTINGS230.00]]
CHNL# 136: [VOLT199044 [PT.ACONI230.00]]
CHNL# 135: [VOLT199000 [LINGAN 230.00]]
1.2000
0.70000
0.0
1.0000
2.0000
3.0000
4.0000
5.0000
6.0000
7.0000
8.0000
9.0000
10.000
TIME (SECONDS)
TUE, JAN 27 2009 15:53
230KV BUS VOLTS

2013 WINTER PEAK STORA 167, NS LOAD 2371
NS-NB=-200; NB-NE=300; CBX=543; ONI=773 ONS=863
1 PHASE FAULT ON L8004 AT HOPEWELL BREAKER 79N-810 FAILS
BBU TRIPS 8003 IN 15 CYCLES: SPS DROPS LINGAN UNIT 2
FILE: b07s-pg_8004_79n_bbu-2013WP-NS-import-200.out
CHNL# 217: [L6513NMW]
CHNL# 215: [L6503MW]
CHNL# 197: [L8003MW]
CHNL# 195: [L8004MW]
CHNL# 193: [L8001MW]
CHNL# 221: [L3001MW]
250.00
500.00
1000.0
0.0
-250.0
-1000.
TIME (SECONDS)
TUE, JAN 27 2009 15:53
LINE FLOW MW

2013 WINTER PEAK STORA 167, NS LOAD 2371
NS-NB=-200; NB-NE=300; CBX=543; ONI=773 ONS=863
1 PHASE FAULT ON L8004 AT HOPEWELL BREAKER 79N-810 FAILS
BBU TRIPS 8003 IN 15 CYCLES: SPS DROPS LINGAN UNIT 2
FILE: b07s-pg_8004_79n_bbu-2013WP-NS-import-200.out
CHNL# 154: [IR141-DIGBYH69.0 VOLTS]
CHNL# 153: [IR137-STATIG25.0 VOLTS]
CHNL# 152: [IR114-GLENDH138.0 VOLTS]
CHNL# 151: [IR84-DALHOHV230.0 VOLTS]
CHNL# 150: [IR82_NUTBHV69.0 VOLTS]
CHNL# 149: [IR45_AMHERTP138.0 VOLTS]
1.2000
0.70000
0.0
1.0000
2.0000
3.0000
4.0000
5.0000
6.0000
7.0000
8.0000
9.0000
10.000
TIME (SECONDS)
TUE, JAN 27 2009 15:53
WIND BUS VOLTS

2013 WINTER PEAK STORA 167, NS LOAD 2371
NS-NB=-200; NB-NE=300; CBX=543; ONI=773 ONS=863
1 PHASE FAULT ON L8004 AT HOPEWELL BREAKER 79N-810 FAILS
SLG FAULT ON LINGAN BUS NODE BETWEEN G3 AND G4
FILE: b08-88s_b71_1ph_88s721-2013WP-NS-import-200.out
CHNL# 20: [ANGL199169 [TUFTCV3 14.400] [3]] [ANGL156661 [DARL G1 22.000] [1]
CHNL# 17: [ANGL199086 [TRENTON613.800] [6]] [ANGL156661 [DARL G1 22.000] [1]
CHNL# 16: [ANGL199085 [TRENTN5 13.800] [5]] [ANGL156661 [DARL G1 22.000] [1]
CHNL# 15: [ANGL199061 [TMP1 STO13.800] [1]] [ANGL156661 [DARL G1 22.000] [1]
CHNL# 13: [ANGL199043 [ACONIG1 20.000] [1]] [ANGL156661 [DARL G1 22.000] [1]
CHNL# 11: [ANGL199001 [LINGAN1 14.400] [1]] [ANGL156661 [DARL G1 22.000] [1]
100.00
-100.0
50.000
-150.0
0.0
1.0000
2.0000
3.0000
4.0000
5.0000
6.0000
7.0000
8.0000
9.0000
10.000
TIME (SECONDS)
TUE, JAN 27 2009 15:53
NS ANGLE

2013 WINTER PEAK STORA 167, NS LOAD 2371
NS-NB=-200; NB-NE=300; CBX=543; ONI=773 ONS=863
1 PHASE FAULT ON L8004 AT HOPEWELL BREAKER 79N-810 FAILS
SLG FAULT ON LINGAN BUS NODE BETWEEN G3 AND G4
FILE: b08-88s_b71_1ph_88s721-2013WP-NS-import-200.out
CHNL# 10: [ANGL190472 [BLLDNG2 19.000] [1]] [ANGL156661 [DARL G1 22.000] [1]
CHNL# 6: [ANGL190456 [LEPRG1 26.000] [1]] [ANGL156661 [DARL G1 22.000] [1]
CHNL# 5: [ANGL190450 [MACTG1 13.800] [1]] [ANGL156661 [DARL G1 22.000] [1]
CHNL# 3: [ANGL126652 [RAV 3 22.000] [1]] [ANGL156661 [DARL G1 22.000] [1]
CHNL# 2: [ANGL101063 [MYST G7 22.000] [1]] [ANGL156661 [DARL G1 22.000] [1]
CHNL# 1: [ANGL100060 [MIS GT1 18.000] [1]] [ANGL156661 [DARL G1 22.000] [1]
100.00
-100.0
0.0
1.0000
2.0000
3.0000
4.0000
5.0000
6.0000
7.0000
8.0000
9.0000
10.000
TIME (SECONDS)
TUE, JAN 27 2009 15:53
"NE,NY,NB ANGLE"

2013 WINTER PEAK STORA 167, NS LOAD 2371
NS-NB=-200; NB-NE=300; CBX=543; ONI=773 ONS=863
1 PHASE FAULT ON L8004 AT HOPEWELL BREAKER 79N-810 FAILS
SLG FAULT ON LINGAN BUS NODE BETWEEN G3 AND G4
FILE: b08-88s_b71_1ph_88s721-2013WP-NS-import-200.out
CHNL# 59: [POWER199169 [TUFTCV3 14.400] [3]]
CHNL# 56: [POWER199086 [TRENTON613.800] [6]]
CHNL# 55: [POWER199085 [TRENTN5 13.800] [5]]
CHNL# 54: [POWER199061 [TMP1 STO13.800] [1]]
CHNL# 52: [POWER199043 [ACONIG1 20.000] [1]]
CHNL# 50: [POWER199001 [LINGAN1 14.400] [1]]
2.5000
1.0000
-1.500
0.0
1.0000
2.0000
3.0000
4.0000
5.0000
6.0000
7.0000
8.0000
9.0000
10.000
TIME (SECONDS)
TUE, JAN 27 2009 15:53
NS MW

2013 WINTER PEAK STORA 167, NS LOAD 2371
NS-NB=-200; NB-NE=300; CBX=543; ONI=773 ONS=863
1 PHASE FAULT ON L8004 AT HOPEWELL BREAKER 79N-810 FAILS
SLG FAULT ON LINGAN BUS NODE BETWEEN G3 AND G4
FILE: b08-88s_b71_1ph_88s721-2013WP-NS-import-200.out
CHNL# 49: [POWER190472 [BLLDNG2 19.000] [1]]
CHNL# 45: [POWER190456 [LEPRG1 26.000] [1]]
CHNL# 44: [POWER190450 [MACTG1 13.800] [1]]
CHNL# 42: [POWER126652 [RAV 3 22.000] [1]]
CHNL# 41: [POWER101063 [MYST G7 22.000] [1]]
CHNL# 40: [POWER100060 [MIS GT1 18.000] [1]]
7.0000
9.0000
5.0000
6.5000
2.0000
4.0000
0.0
1.0000
1.0000
2.0000
3.0000
4.0000
5.0000
6.0000
7.0000
8.0000
9.0000
10.000
TIME (SECONDS)
TUE, JAN 27 2009 15:53
"NE,NY,NB POWER"

2013 WINTER PEAK STORA 167, NS LOAD 2371
NS-NB=-200; NB-NE=300; CBX=543; ONI=773 ONS=863
1 PHASE FAULT ON L8004 AT HOPEWELL BREAKER 79N-810 FAILS
SLG FAULT ON LINGAN BUS NODE BETWEEN G3 AND G4
FILE: b08-88s_b71_1ph_88s721-2013WP-NS-import-200.out
CHNL# 119: [VARS IR141-DIGBY]
CHNL# 118: [VARS IR137-STATIA]
CHNL# 117: [VARS IR114-GLENDHU]
CHNL# 116: [VARS IR84-DALHOUSIE]
CHNL# 115: [VARS IR82_NUTTBY]
CHNL# 114: [VARS IR45_AMHERST]
0.50000
-0.5000
0.0
1.0000
2.0000
3.0000
4.0000
5.0000
6.0000
7.0000
8.0000
9.0000
10.000
TIME (SECONDS)
TUE, JAN 27 2009 15:53
NS WIND MV

2013 WINTER PEAK STORA 167, NS LOAD 2371
NS-NB=-200; NB-NE=300; CBX=543; ONI=773 ONS=863
1 PHASE FAULT ON L8004 AT HOPEWELL BREAKER 79N-810 FAILS
SLG FAULT ON LINGAN BUS NODE BETWEEN G3 AND G4
FILE: b08-88s_b71_1ph_88s721-2013WP-NS-import-200.out
CHNL# 79: [POWER IR141-DIGBY]
CHNL# 78: [POWER IR137-STATIA]
CHNL# 77: [POWER IR114-GLENDHU]
CHNL# 76: [POWER IR84-DALHOUSIE]
CHNL# 75: [POWER IR82_NUTTBY]
CHNL# 74: [POWER IR45_AMHERST]
1.0000
0.0
0.0
1.0000
2.0000
3.0000
4.0000
5.0000
6.0000
7.0000
8.0000
9.0000
10.000
TIME (SECONDS)
TUE, JAN 27 2009 15:53
NS WIND MW

2013 WINTER PEAK STORA 167, NS LOAD 2371
NS-NB=-200; NB-NE=300; CBX=543; ONI=773 ONS=863
1 PHASE FAULT ON L8004 AT HOPEWELL BREAKER 79N-810 FAILS
SLG FAULT ON LINGAN BUS NODE BETWEEN G3 AND G4
FILE: b08-88s_b71_1ph_88s721-2013WP-NS-import-200.out
CHNL# 133: [VOLT199125 [ONSLOW 345.00]]
CHNL# 132: [VOLT199120 [HOPEWELL 345.00]]
CHNL# 131: [VOLT199045 [WOODBINE345.00]]
CHNL# 130: [VOLT190320 [SALBRY 345.00]]
CHNL# 128: [VOLT190004 [KESWICK 345.00]]
CHNL# 127: [VOLT 70002 [ORRINGTN345.00]]
1.1000
0.90000
0.0
1.0000
2.0000
3.0000
4.0000
5.0000
6.0000
7.0000
8.0000
9.0000
10.000
TIME (SECONDS)
TUE, JAN 27 2009 15:53
"345KV VOLTAGE"

2013 WINTER PEAK STORA 167, NS LOAD 2371
NS-NB=-200; NB-NE=300; CBX=543; ONI=773 ONS=863
1 PHASE FAULT ON L8004 AT HOPEWELL BREAKER 79N-810 FAILS
SLG FAULT ON LINGAN BUS NODE BETWEEN G3 AND G4
FILE: b08-88s_b71_1ph_88s721-2013WP-NS-import-200.out
CHNL# 125: 60*(1+[FREQ199125 [ONSLOW 345.00]])
CHNL# 124: 60*(1+[FREQ199120 [HOPEWELL 345.00]])
CHNL# 123: 60*(1+[FREQ199045 [WOODBINE345.00]])
CHNL# 122: 60*(1+[FREQ190320 [SALBRY 345.00]])
CHNL# 121: 60*(1+[FREQ190197 [C.COVE 345.00]])
CHNL# 120: 60*(1+[FREQ 70002 [ORRINGTN345.00]])
60.500
59.500
0.0
1.0000
2.0000
3.0000
4.0000
5.0000
6.0000
7.0000
8.0000
9.0000
10.000
TIME (SECONDS)
TUE, JAN 27 2009 15:53
FREQUENCY HZ

2013 WINTER PEAK STORA 167, NS LOAD 2371
NS-NB=-200; NB-NE=300; CBX=543; ONI=773 ONS=863
1 PHASE FAULT ON L8004 AT HOPEWELL BREAKER 79N-810 FAILS
SLG FAULT ON LINGAN BUS NODE BETWEEN G3 AND G4
FILE: b08-88s_b71_1ph_88s721-2013WP-NS-import-200.out
CHNL# 145: [VOLT199193 [HHWAS 138.00]]
CHNL# 144: [VOLT199165 [TUFTCOVE138.00]]
CHNL# 143: [VOLT199138 [SPRNGHILL138.00]]
CHNL# 142: [VOLT199090 [SON-TREN138.00]]
CHNL# 141: [VOLT199051 [HASTINGS138.00]]
CHNL# 146: [VOLT199280 [TUSKET A138.00]]
1.2000
0.70000
0.0
1.0000
2.0000
3.0000
4.0000
5.0000
6.0000
7.0000
8.0000
9.0000
10.000
TIME (SECONDS)
TUE, JAN 27 2009 15:53
138KV BUS VOLTS

2013 WINTER PEAK STORA 167, NS LOAD 2371
NS-NB=-200; NB-NE=300; CBX=543; ONI=773 ONS=863
1 PHASE FAULT ON L8004 AT HOPEWELL BREAKER 79N-810 FAILS
SLG FAULT ON LINGAN BUS NODE BETWEEN G3 AND G4
FILE: b08-88s_b71_1ph_88s721-2013WP-NS-import-200.out
CHNL# 139: [VOLT199200 [BRUSHY 230.00]]
CHNL# 138: [VOLT199130 [ONSLOW 230.00]]
CHNL# 137: [VOLT199050 [HASTINGS230.00]]
CHNL# 136: [VOLT199044 [PT.ACONI230.00]]
CHNL# 135: [VOLT199000 [LINGAN 230.00]]
CHNL# 140: [VOLT199240 [BWATER A230.00]]
1.2000
0.70000
0.0
1.0000
2.0000
3.0000
4.0000
5.0000
6.0000
7.0000
8.0000
9.0000
10.000
TIME (SECONDS)
TUE, JAN 27 2009 15:53
230KV BUS VOLTS

2013 WINTER PEAK STORA 167, NS LOAD 2371
NS-NB=-200; NB-NE=300; CBX=543; ONI=773 ONS=863
1 PHASE FAULT ON L8004 AT HOPEWELL BREAKER 79N-810 FAILS
SLG FAULT ON LINGAN BUS NODE BETWEEN G3 AND G4
FILE: b08-88s_b71_1ph_88s721-2013WP-NS-import-200.out
CHNL# 197: [L8003MW]
CHNL# 195: [L8004MW]
CHNL# 193: [L8001MW]
CHNL# 221: [L3001MW]
CHNL# 215: [L6503MW]
CHNL# 217: [L6513MW]
250.00
500.00
1000.0
0.0
-250.0
-1000.
0.0
1.0000
2.0000
3.0000
4.0000
5.0000
6.0000
7.0000
8.0000
9.0000
10.000
TIME (SECONDS)
TUE, JAN 27 2009 15:53
LINE FLOW MW

2013 WINTER PEAK STORA 167, NS LOAD 2371
NS-NB=-200; NB-NE=300; CBX=543; ONI=773 ONS=863
1 PHASE FAULT ON L8004 AT HOPEWELL BREAKER 79N-810 FAILS
SLG FAULT ON LINGAN BUS NODE BETWEEN G3 AND G4
FILE: b08-88s_b71_1ph_88s721-2013WP-NS-import-200.out
CHNL# 153: [IR137-STATIG25.0 VOLTS]
CHNL# 152: [IR114-GLENDH138.0 VOLTS]
CHNL# 151: [IR84-DALHOHV230.0 VOLTS]
CHNL# 150: [IR82_NUTBHV69.0 VOLTS]
CHNL# 149: [IR45_AMHERTP138.0 VOLTS]
CHNL# 154: [IR141-DIGBYH69.0 VOLTS]
1.2000
0.70000
0.0
1.0000
2.0000
3.0000
4.0000
5.0000
6.0000
7.0000
8.0000
9.0000
10.000
TIME (SECONDS)
TUE, JAN 27 2009 15:53
WIND BUS VOLTS

2013 WINTER PEAK STORA 167, NS LOAD 2371
NS-NB=-200; NB-NE=300; CBX=543; ONI=773 ONS=863
1 PHASE FAULT ON L8001 AT ONSLOW BREAKER 67N-815 FAILS;
BBU TRIPS 67N-T82 IN 15 CYCLES; NO SPS
FILE: b09-pg_8001_67n_815_bbu-2013WP-NS-import-200.out
CHNL# 20: [ANGL199169 [TUFTCV3 14.400] [3]] [ANGL156661 [DARL G1 22.000] [1]] 100.00 -100.0
CHNL# 17: [ANGL199086 [TRENTON613.800] [6]] [ANGL156661 [DARL G1 22.000] [1]] 100.00 -100.0
CHNL# 16: [ANGL199085 [TRENTN5 13.800] [5]] [ANGL156661 [DARL G1 22.000] [1]] 100.00 -100.0
CHNL# 15: [ANGL199061 [TMP1 STO13.800] [1]] [ANGL156661 [DARL G1 22.000] [1]] 50.000 -150.0
CHNL# 13: [ANGL199043 [ACONIG1 20.000] [1]] [ANGL156661 [DARL G1 22.000] [1]] 100.00 -100.0
CHNL# 11: [ANGL199001 [LINGAN1 14.400] [1]] [ANGL156661 [DARL G1 22.000] [1]] 100.00 -100.0
0.0 1.0000 2.0000 3.0000 4.0000 5.0000 6.0000 7.0000 8.0000 9.0000 10.000
TIME (SECONDS)
TUE, JAN 27 2009 15:53
NS ANGLE

2013 WINTER PEAK STORA 167, NS LOAD 2371
NS-NB=-200; NB-NE=300; CBX=543; ONI=773 ONS=863
1 PHASE FAULT ON L8001 AT ONSLOW BREAKER 67N-815 FAILS;
BBU TRIPS 67N-T82 IN 15 CYCLES; NO SPS
FILE: b09-pg_8001_67n_815_bbu-2013WP-NS-import-200.out
CHNL# 10: [ANGL190472 [BLLDNG2 19.000] [1]] [ANGL156661 [DARL G1 22.000] [1]] 100.00 -100.0
CHNL# 6: [ANGL190456 [LEPRG1 26.000] [1]] [ANGL156661 [DARL G1 22.000] [1]] 100.00 -100.0
CHNL# 5: [ANGL190450 [MACTG1 13.800] [1]] [ANGL156661 [DARL G1 22.000] [1]] 100.00 -100.0
CHNL# 3: [ANGL126652 [RAV 3 22.000] [1]] [ANGL156661 [DARL G1 22.000] [1]] 100.00 -100.0
CHNL# 2: [ANGL101063 [MYST G7 22.000] [1]] [ANGL156661 [DARL G1 22.000] [1]] 100.00 -100.0
CHNL# 1: [ANGL100060 [MIS GT1 18.000] [1]] [ANGL156661 [DARL G1 22.000] [1]] 100.00 -100.0
0.0 1.0000 2.0000 3.0000 4.0000 5.0000 6.0000 7.0000 8.0000 9.0000 10.000
TIME (SECONDS)
TUE, JAN 27 2009 15:53
"NE,NY,NB ANGLE"

2013 WINTER PEAK STORA 167, NS LOAD 2371
NS-NB=-200; NB-NE=300; CBX=543; ONI=773 ONS=863
1 PHASE FAULT ON L8001 AT ONSLOW BREAKER 67N-815 FAILS;
BBU TRIPS 67N-T82 IN 15 CYCLES; NO SPS
FILE: b09-pg_8001_67n_815_bbu-2013WP-NS-import-200.out
CHNL# 59: [POWER199169 [TUFTCV3 14.400] [3]] 2.5000 0.0
CHNL# 56: [POWER199086 [TRENTON613.800] [6]] 2.5000 0.0
CHNL# 55: [POWER199085 [TRENTN5 13.800] [5]] 2.5000 0.0
CHNL# 54: [POWER199061 [TMP1 STO13.800] [1]] 1.0000 -1.500
CHNL# 52: [POWER199043 [ACONIG1 20.000] [1]] 2.5000 0.0
CHNL# 50: [POWER199001 [LINGAN1 14.400] [1]] 2.5000 0.0
0.0 1.0000 2.0000 3.0000 4.0000 5.0000 6.0000 7.0000 8.0000 9.0000 10.000
TIME (SECONDS)
TUE, JAN 27 2009 15:53
NS MW

2013 WINTER PEAK STORA 167, NS LOAD 2371
NS-NB=-200; NB-NE=300; CBX=543; ONI=773 ONS=863
1 PHASE FAULT ON L8001 AT ONSLOW BREAKER 67N-815 FAILS;
BBU TRIPS 67N-T82 IN 15 CYCLES; NO SPS
FILE: b09-pg_8001_67n_815_bbu-2013WP-NS-import-200.out
CHNL# 49: [POWER190472 [BLLDNG2 19.000] [1]] 7.0000 2.0000
CHNL# 45: [POWER190456 [LEPRG1 26.000] [1]] 9.0000 4.0000
CHNL# 44: [POWER190450 [MACTG1 13.800] [1]] 5.0000 0.0
CHNL# 42: [POWER126652 [RAV 3 22.000] [1]] 5.0000 0.0
CHNL# 41: [POWER101063 [MYST G7 22.000] [1]] 6.5000 1.0000
CHNL# 40: [POWER100060 [MIS GT1 18.000] [1]] 7.0000 2.0000
0.0 1.0000 2.0000 3.0000 4.0000 5.0000 6.0000 7.0000 8.0000 9.0000 10.000
TIME (SECONDS)
TUE, JAN 27 2009 15:53
"NE,NY,NB POWER"

NS WIND MV

NS WIND MW

"345KV VOLTAGE"

FREQUENCY HZ

2013 WINTER PEAK STORA 167, NS LOAD 2371
NS-NB=-200; NB-NE=300; CBX=543; ONI=773 ONS=863
1 PHASE FAULT ON L8001 AT ONSLOW BREAKER 67N-815 FAILS;
BBU TRIPS 67N-T82 IN 15 CYCLES; NO SPS
FILE: b09-pg_8001_67n_815_bbu-2013WP-NS-import-200.out
CHNL# 146: [VOLT199280 [TUSKET A138.00]]
CHNL# 145: [VOLT199193 [HHWAS 138.00]]
CHNL# 144: [VOLT199165 [TUFTCOVE138.00]]
CHNL# 143: [VOLT199138 [SPRNGHILL138.00]]
CHNL# 142: [VOLT199090 [SON-TREN138.00]]
CHNL# 141: [VOLT199051 [HASTINGS138.00]]
TIME (SECONDS)
TUE, JAN 27 2009 15:53
138KV BUS VOLTS

2013 WINTER PEAK STORA 167, NS LOAD 2371
NS-NB=-200; NB-NE=300; CBX=543; ONI=773 ONS=863
1 PHASE FAULT ON L8001 AT ONSLOW BREAKER 67N-815 FAILS;
BBU TRIPS 67N-T82 IN 15 CYCLES; NO SPS
FILE: b09-pg_8001_67n_815_bbu-2013WP-NS-import-200.out
CHNL# 140: [VOLT199240 [BWATER A230.00]]
CHNL# 139: [VOLT199200 [BRUSHY 230.00]]
CHNL# 138: [VOLT199130 [ONSLOW 230.00]]
CHNL# 137: [VOLT199050 [HASTINGS230.00]]
CHNL# 136: [VOLT199044 [PT.ACONI230.00]]
CHNL# 135: [VOLT199000 [LINGAN 230.00]]
TIME (SECONDS)
TUE, JAN 27 2009 15:53
230KV BUS VOLTS

2013 WINTER PEAK STORA 167, NS LOAD 2371
NS-NB=-200; NB-NE=300; CBX=543; ONI=773 ONS=863
1 PHASE FAULT ON L8001 AT ONSLOW BREAKER 67N-815 FAILS;
BBU TRIPS 67N-T82 IN 15 CYCLES; NO SPS
FILE: b09-pg_8001_67n_815_bbu-2013WP-NS-import-200.out
CHNL# 217: [L6533MW]
CHNL# 215: [L6503MW]
CHNL# 197: [L8003MW]
CHNL# 195: [L8004MW]
CHNL# 193: [L8001MW]
CHNL# 221: [L3001MW]
TIME (SECONDS)
TUE, JAN 27 2009 15:53
LINE FLOW MW

2013 WINTER PEAK STORA 167, NS LOAD 2371
NS-NB=-200; NB-NE=300; CBX=543; ONI=773 ONS=863
1 PHASE FAULT ON L8001 AT ONSLOW BREAKER 67N-815 FAILS;
BBU TRIPS 67N-T82 IN 15 CYCLES; NO SPS
FILE: b09-pg_8001_67n_815_bbu-2013WP-NS-import-200.out
CHNL# 154: [IR141-DIGBYH69.0 VOLTS]
CHNL# 153: [IR137-STATIG25.0 VOLTS]
CHNL# 152: [IR114-GLENDH138.0 VOLTS]
CHNL# 151: [IR84-DALHOHV230.0 VOLTS]
CHNL# 150: [IR82 NUTBHV69.0 VOLTS]
CHNL# 149: [IR45 AMHERTP138.0 VOLTS]
TIME (SECONDS)
TUE, JAN 27 2009 15:53
WIND BUS VOLTS

2013 WINTER PEAK STORA 167, NS LOAD 2371
NS-NB=-200; NB-NE=300; CBX=543; ONI=773 ONS=863
SLG FLT ON SEPARATE PHASES OF DOUBLE CKT TOWER
7003 AND 7004 NEAR TRENTON CLEARED IN 5 CYCLES
FILE: c01-pg_7003_7004_50n-2013WP-NS-import-200.out
CHNL# 20: [ANGL199169 [TUFTCV3 14.400] [3]] [ANGL156661 [DARL G1 22.000] [1]
CHNL# 17: [ANGL199086 [TRENTON6613.800] [6]] [ANGL156661 [DARL G1 22.000] [1]
CHNL# 16: [ANGL199085 [TRENTN5 13.800] [5]] [ANGL156661 [DARL G1 22.000] [1]
CHNL# 15: [ANGL199061 [TMP1 STO13.800] [1]] [ANGL156661 [DARL G1 22.000] [1]
CHNL# 13: [ANGL199043 [ACONIG1 20.000] [1]] [ANGL156661 [DARL G1 22.000] [1]
CHNL# 11: [ANGL199001 [LINGAN1 14.400] [1]] [ANGL156661 [DARL G1 22.000] [1]
100.00
50.000
-100.0
-150.0
0.0
1.0000
2.0000
3.0000
4.0000
5.0000
6.0000
7.0000
8.0000
9.0000
10.000
TIME (SECONDS)
TUE, JAN 27 2009 15:54
NS ANGLE

2013 WINTER PEAK STORA 167, NS LOAD 2371
NS-NB=-200; NB-NE=300; CBX=543; ONI=773 ONS=863
SLG FLT ON SEPARATE PHASES OF DOUBLE CKT TOWER
7003 AND 7004 NEAR TRENTON CLEARED IN 5 CYCLES
FILE: c01-pg_7003_7004_50n-2013WP-NS-import-200.out
CHNL# 10: [ANGL190472 [BLLDNG2 19.000] [1]] [ANGL156661 [DARL G1 22.000] [1]
CHNL# 6: [ANGL190456 [LEPRG1 26.000] [1]] [ANGL156661 [DARL G1 22.000] [1]
CHNL# 5: [ANGL190450 [MACTG1 13.800] [1]] [ANGL156661 [DARL G1 22.000] [1]
CHNL# 3: [ANGL126652 [RAV 3 22.000] [1]] [ANGL156661 [DARL G1 22.000] [1]
CHNL# 2: [ANGL101063 [MYST G7 22.000] [1]] [ANGL156661 [DARL G1 22.000] [1]
CHNL# 1: [ANGL100060 [MIS GT1 18.000] [1]] [ANGL156661 [DARL G1 22.000] [1]
100.00
-100.0
0.0
1.0000
2.0000
3.0000
4.0000
5.0000
6.0000
7.0000
8.0000
9.0000
10.000
TIME (SECONDS)
TUE, JAN 27 2009 15:53
"NE,NY,NB ANGLE"

2013 WINTER PEAK STORA 167, NS LOAD 2371
NS-NB=-200; NB-NE=300; CBX=543; ONI=773 ONS=863
SLG FLT ON SEPARATE PHASES OF DOUBLE CKT TOWER
7003 AND 7004 NEAR TRENTON CLEARED IN 5 CYCLES
FILE: c01-pg_7003_7004_50n-2013WP-NS-import-200.out
CHNL# 59: [POWER199169 [TUFTCV3 14.400] [3]]
CHNL# 56: [POWER199086 [TRENTON6613.800] [6]]
CHNL# 55: [POWER199085 [TRENTN5 13.800] [5]]
CHNL# 54: [POWER199061 [TMP1 STO13.800] [1]]
CHNL# 52: [POWER199043 [ACONIG1 20.000] [1]]
CHNL# 50: [POWER199001 [LINGAN1 14.400] [1]]
2.5000
1.0000
-1.500
0.0
1.0000
2.0000
3.0000
4.0000
5.0000
6.0000
7.0000
8.0000
9.0000
10.000
TIME (SECONDS)
TUE, JAN 27 2009 15:54
NS MW

2013 WINTER PEAK STORA 167, NS LOAD 2371
NS-NB=-200; NB-NE=300; CBX=543; ONI=773 ONS=863
SLG FLT ON SEPARATE PHASES OF DOUBLE CKT TOWER
7003 AND 7004 NEAR TRENTON CLEARED IN 5 CYCLES
FILE: c01-pg_7003_7004_50n-2013WP-NS-import-200.out
CHNL# 49: [POWER190472 [BLLDNG2 19.000] [1]]
CHNL# 45: [POWER190456 [LEPRG1 26.000] [1]]
CHNL# 44: [POWER190450 [MACTG1 13.800] [1]]
CHNL# 42: [POWER126652 [RAV 3 22.000] [1]]
CHNL# 41: [POWER101063 [MYST G7 22.000] [1]]
CHNL# 40: [POWER100060 [MIS GT1 18.000] [1]]
7.0000
9.0000
5.0000
6.5000
2.0000
4.0000
0.0
1.0000
0.0
1.0000
2.0000
3.0000
4.0000
5.0000
6.0000
7.0000
8.0000
9.0000
10.000
TIME (SECONDS)
TUE, JAN 27 2009 15:54
"NE,NY,NB POWER"

2013 WINTER PEAK STORA 167, NS LOAD 2371
NS-NB=-200; NB-NE=300; CBX=543; ONI=773 ONS=863
SLG FLT ON SEPARATE PHASES OF DOUBLE CKT TOWER
7003 AND 7004 NEAR TRENTON CLEARED IN 5 CYCLES
FILE: c01-pg_7003_7004_50n-2013WP-NS-import-200.out
CHNL# 119: [VARS IR141-DIGBY]
CHNL# 118: [VARS IR137-STATIA]
CHNL# 117: [VARS IR114-GLENDHU]
CHNL# 116: [VARS IR84-DALHOUSIE]
CHNL# 115: [VARS IR82_NUTTBY]
CHNL# 114: [VARS IR45_AMHERST]
TIME (SECONDS)
TUE, JAN 27 2009 15:54
NS WIND MV

2013 WINTER PEAK STORA 167, NS LOAD 2371
NS-NB=-200; NB-NE=300; CBX=543; ONI=773 ONS=863
SLG FLT ON SEPARATE PHASES OF DOUBLE CKT TOWER
7003 AND 7004 NEAR TRENTON CLEARED IN 5 CYCLES
FILE: c01-pg_7003_7004_50n-2013WP-NS-import-200.out
CHNL# 79: [POWER IR141-DIGBY]
CHNL# 78: [POWER IR137-STATIA]
CHNL# 77: [POWER IR114-GLENDHU]
CHNL# 76: [POWER IR84-DALHOUSIE]
CHNL# 75: [POWER IR82_NUTTBY]
CHNL# 74: [POWER IR45_AMHERST]
TIME (SECONDS)
TUE, JAN 27 2009 15:54
NS WIND MW

2013 WINTER PEAK STORA 167, NS LOAD 2371
NS-NB=-200; NB-NE=300; CBX=543; ONI=773 ONS=863
SLG FLT ON SEPARATE PHASES OF DOUBLE CKT TOWER
7003 AND 7004 NEAR TRENTON CLEARED IN 5 CYCLES
FILE: c01-pg_7003_7004_50n-2013WP-NS-import-200.out
CHNL# 133: [VOLT199125 [ONSLOW 345.00]]
CHNL# 132: [VOLT199120 [HOPEWELL 345.00]]
CHNL# 131: [VOLT199045 [WOODBINE345.00]]
CHNL# 130: [VOLT190320 [SALBRY 345.00]]
CHNL# 128: [VOLT190004 [KESWICK 345.00]]
CHNL# 127: [VOLT 70002 [ORRINGTN345.00]]
TIME (SECONDS)
TUE, JAN 27 2009 15:54
"345KV VOLTAGE"

2013 WINTER PEAK STORA 167, NS LOAD 2371
NS-NB=-200; NB-NE=300; CBX=543; ONI=773 ONS=863
SLG FLT ON SEPARATE PHASES OF DOUBLE CKT TOWER
7003 AND 7004 NEAR TRENTON CLEARED IN 5 CYCLES
FILE: c01-pg_7003_7004_50n-2013WP-NS-import-200.out
CHNL# 125: 60*(1+[FREQ199125 [ONSLOW 345.00]])
CHNL# 124: 60*(1+[FREQ199120 [HOPEWELL 345.00]])
CHNL# 123: 60*(1+[FREQ199045 [WOODBINE345.00]])
CHNL# 122: 60*(1+[FREQ190320 [SALBRY 345.00]])
CHNL# 121: 60*(1+[FREQ190197 [C.COVE 345.00]])
CHNL# 120: 60*(1+[FREQ 70002 [ORRINGTN345.00]])
TIME (SECONDS)
TUE, JAN 27 2009 15:54
FREQUENCY HZ

2013 WINTER PEAK STORA 167, NS LOAD 2371
NS-NB=-200; NB-NE=300; CBX=543; ONI=773 ONS=863
SLG FLT ON SEPARATE PHASES OF DOUBLE CKT TOWER
7003 AND 7004 NEAR TRENTON CLEARED IN 5 CYCLES
FILE: c01-pg_7003_7004_50n-2013WP-NS-import-200.out
CHNL# 146: [VOLT199280 [TUSKET A138.00]]
CHNL# 145: [VOLT199193 [HHWAS 138.00]]
CHNL# 144: [VOLT199165 [TUFTCOVE138.00]]
CHNL# 143: [VOLT199135 [SPRNGHLL138.00]]
CHNL# 142: [VOLT199090 [50N-TREN138.00]]
CHNL# 141: [VOLT199051 [HASTINGS138.00]]
1.2000
0.70000
0.0
1.0000
2.0000
3.0000
4.0000
5.0000
6.0000
7.0000
8.0000
9.0000
10.000
TIME (SECONDS)
TUE, JAN 27 2009 15:54
138KV BUS VOLTS

2013 WINTER PEAK STORA 167, NS LOAD 2371
NS-NB=-200; NB-NE=300; CBX=543; ONI=773 ONS=863
SLG FLT ON SEPARATE PHASES OF DOUBLE CKT TOWER
7003 AND 7004 NEAR TRENTON CLEARED IN 5 CYCLES
FILE: c01-pg_7003_7004_50n-2013WP-NS-import-200.out
CHNL# 140: [VOLT199240 [BWATER A230.00]]
CHNL# 139: [VOLT199200 [BRUSHY 230.00]]
CHNL# 138: [VOLT199130 [ONSLOW 230.00]]
CHNL# 137: [VOLT199050 [HASTINGS230.00]]
CHNL# 136: [VOLT199044 [PT.ACONI230.00]]
CHNL# 135: [VOLT199000 [LINGAN 230.00]]
1.2000
0.70000
0.0
1.0000
2.0000
3.0000
4.0000
5.0000
6.0000
7.0000
8.0000
9.0000
10.000
TIME (SECONDS)
TUE, JAN 27 2009 15:54
230KV BUS VOLTS

2013 WINTER PEAK STORA 167, NS LOAD 2371
NS-NB=-200; NB-NE=300; CBX=543; ONI=773 ONS=863
SLG FLT ON SEPARATE PHASES OF DOUBLE CKT TOWER
7003 AND 7004 NEAR TRENTON CLEARED IN 5 CYCLES
FILE: c01-pg_7003_7004_50n-2013WP-NS-import-200.out
CHNL# 217: [L6513NMW]
CHNL# 215: [L6503MW]
CHNL# 197: [L8003MW]
CHNL# 195: [L8004MW]
CHNL# 193: [L8001MW]
CHNL# 221: [L3001MW]
250.00
500.00
1000.0
0.0
-250.0
-1000.
0.0
1.0000
2.0000
3.0000
4.0000
5.0000
6.0000
7.0000
8.0000
9.0000
10.000
TIME (SECONDS)
TUE, JAN 27 2009 15:54
LINE FLOW MW

2013 WINTER PEAK STORA 167, NS LOAD 2371
NS-NB=-200; NB-NE=300; CBX=543; ONI=773 ONS=863
SLG FLT ON SEPARATE PHASES OF DOUBLE CKT TOWER
7003 AND 7004 NEAR TRENTON CLEARED IN 5 CYCLES
FILE: c01-pg_7003_7004_50n-2013WP-NS-import-200.out
CHNL# 154: [IR141-DIGBYH69.0 VOLTS]
CHNL# 153: [IR137-STATIG25.0 VOLTS]
CHNL# 152: [IR114-GLENDH138.0 VOLTS]
CHNL# 151: [IR84-DALHOHV230.0 VOLTS]
CHNL# 150: [IR82_NUTBHV69.0 VOLTS]
CHNL# 149: [IR45_AMHERTP138.0 VOLTS]
1.2000
0.70000
0.0
1.0000
2.0000
3.0000
4.0000
5.0000
6.0000
7.0000
8.0000
9.0000
10.000
TIME (SECONDS)
TUE, JAN 27 2009 15:54
WIND BUS VOLTS

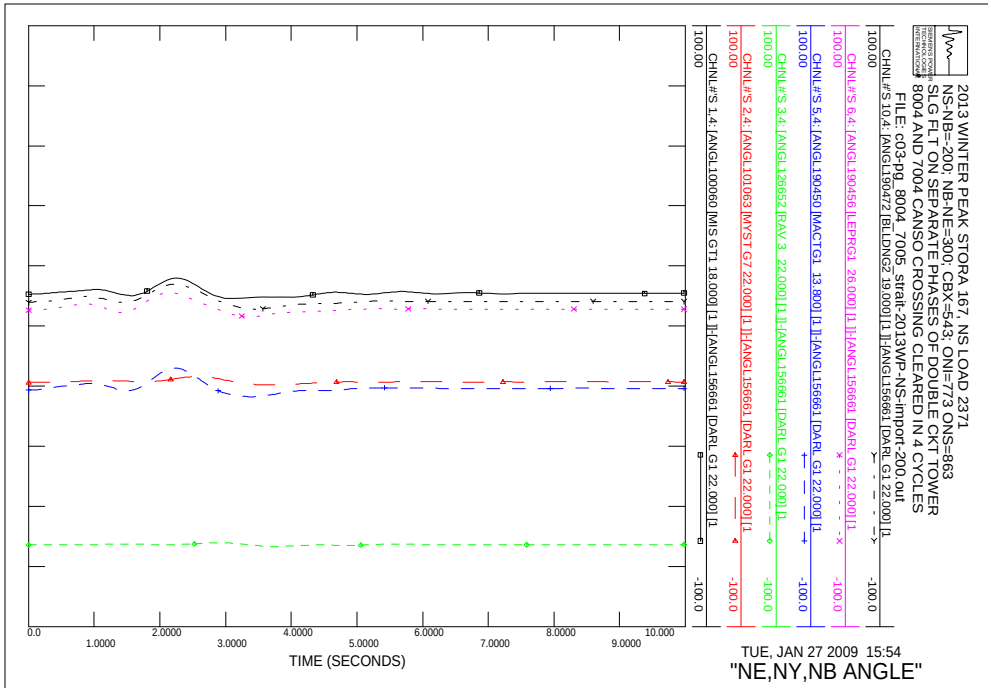
2013 WINTER PEAK STORA 167, NS LOAD 2371
NS-NB=-200; NB-NE=300; CBX=543; ONI=773 ONS=863
SLG FLT ON SEPARATE PHASES OF DOUBLE CKT TOWER
8004 AND 7004 CANSO CROSSING CLEARED IN 4 CYCLES
FILE: c03-pg_8004_7005_strait-2013WP-NS-import-200.out
CHNL#S 10,4: [ANGL190472 [BLLDNG2 19.000] [1]]-[ANGL156661 [DARL G1 22.000] [1
CHNL#S 6,4: [ANGL190456 [LEPRG1 26.000] [1]]-[ANGL156661 [DARL G1 22.000] [1
CHNL#S 5,4: [ANGL190450 [MACTG1 13.800] [1]]-[ANGL156661 [DARL G1 22.000] [1
CHNL#S 3,4: [ANGL126652 [RAV 3 22.000] [1]]-[ANGL156661 [DARL G1 22.000] [1
CHNL#S 2,4: [ANGL101063 [MYST G7 22.000] [1]]-[ANGL156661 [DARL G1 22.000] [1
CHNL#S 1,4: [ANGL100060 [MIS GT1 18.000] [1]]-[ANGL156661 [DARL G1 22.000] [1
TIME (SECONDS)
TUE, JAN 27 2009 15:54
"NE,NY,NB ANGLE"

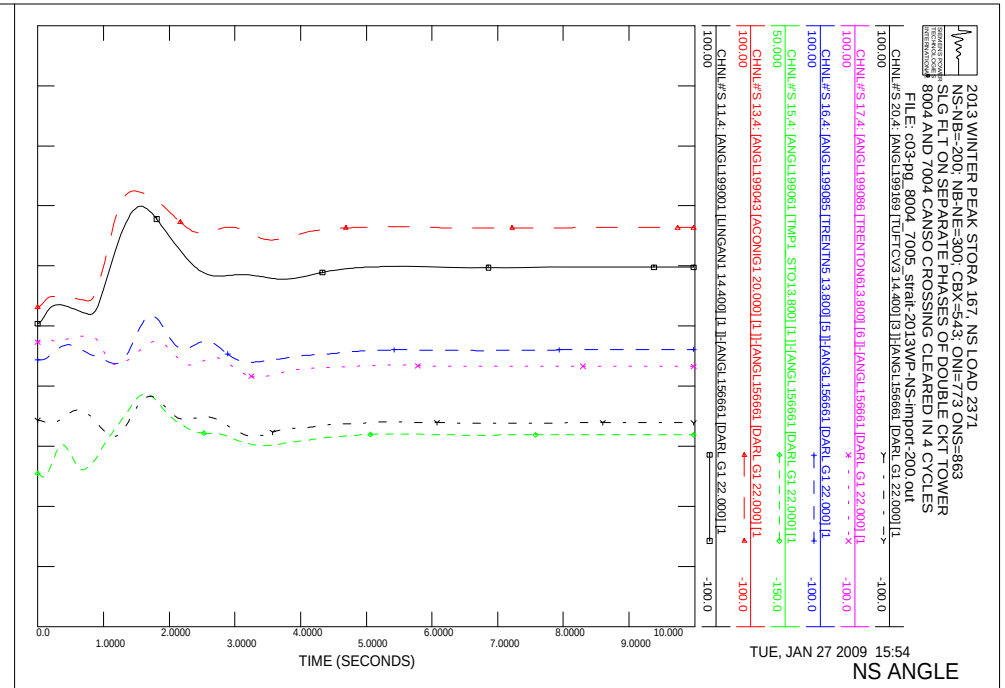
2013 WINTER PEAK STORA 167, NS LOAD 2371
NS-NB=-200; NB-NE=300; CBX=543; ONI=773 ONS=863
SLG FLT ON SEPARATE PHASES OF DOUBLE CKT TOWER
8004 AND 7004 CANSO CROSSING CLEARED IN 4 CYCLES
FILE: c03-pg_8004_7005_strait-2013WP-NS-import-200.out
CHNL#S 20,4: [ANGL199169 [TUFTCV3 14.400] [3]]-[ANGL156661 [DARL G1 22.000] [1
CHNL#S 17,4: [ANGL199086 [TRENTON613.800] [6]]-[ANGL156661 [DARL G1 22.000] [1
CHNL#S 16,4: [ANGL199085 [TRENTN5 13.800] [5]]-[ANGL156661 [DARL G1 22.000] [1
CHNL#S 15,4: [ANGL199061 [TMP1 STO13.800] [1]]-[ANGL156661 [DARL G1 22.000] [1
CHNL#S 13,4: [ANGL199043 [ACONIG1 20.000] [1]]-[ANGL156661 [DARL G1 22.000] [1
CHNL#S 11,4: [ANGL199001 [LINGAN1 14.400] [1]]-[ANGL156661 [DARL G1 22.000] [1
TIME (SECONDS)
TUE, JAN 27 2009 15:54
NS ANGLE

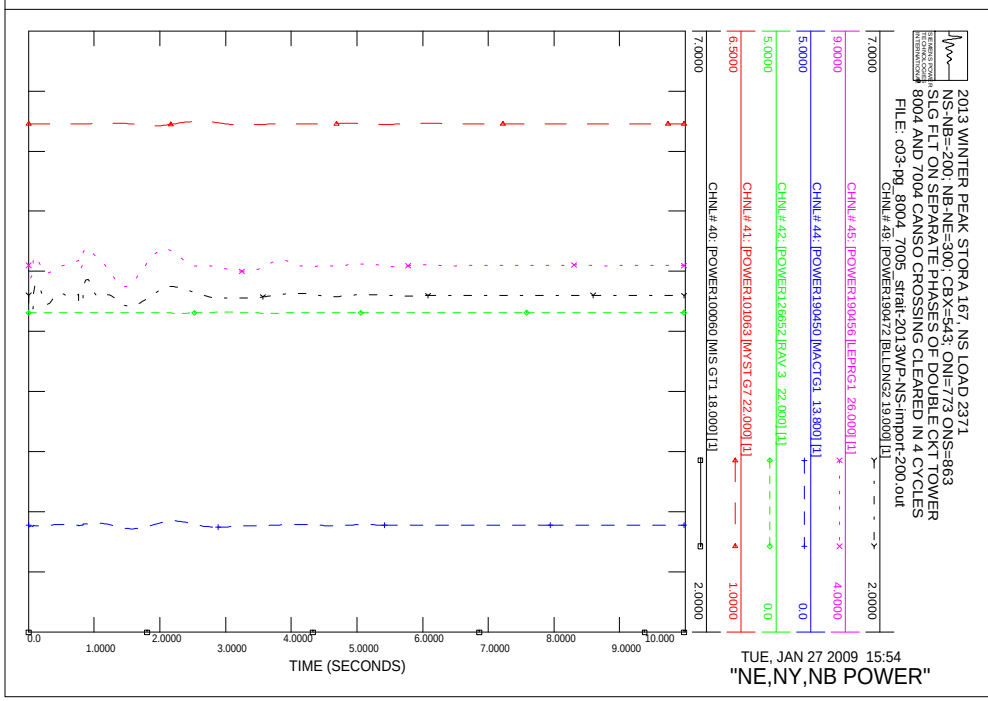
2013 WINTER PEAK STORA 167, NS LOAD 2371
NS-NB=-200; NB-NE=300; CBX=543; ONI=773 ONS=863
SLG FLT ON SEPARATE PHASES OF DOUBLE CKT TOWER
8004 AND 7004 CANSO CROSSING CLEARED IN 4 CYCLES
FILE: c03-pg_8004_7005_strait-2013WP-NS-import-200.out
CHNL# 49: [POWER190472 [BLLDNG2 19.000] [1]]
CHNL# 45: [POWER190456 [LEPRG1 26.000] [1]]
CHNL# 44: [POWER190450 [MACTG1 13.800] [1]]
CHNL# 42: [POWER126652 [RAV 3 22.000] [1]]
CHNL# 41: [POWER101063 [MYST G7 22.000] [1]]
CHNL# 40: [POWER100060 [MIS GT1 18.000] [1]]
TIME (SECONDS)
TUE, JAN 27 2009 15:54
"NE,NY,NB POWER"

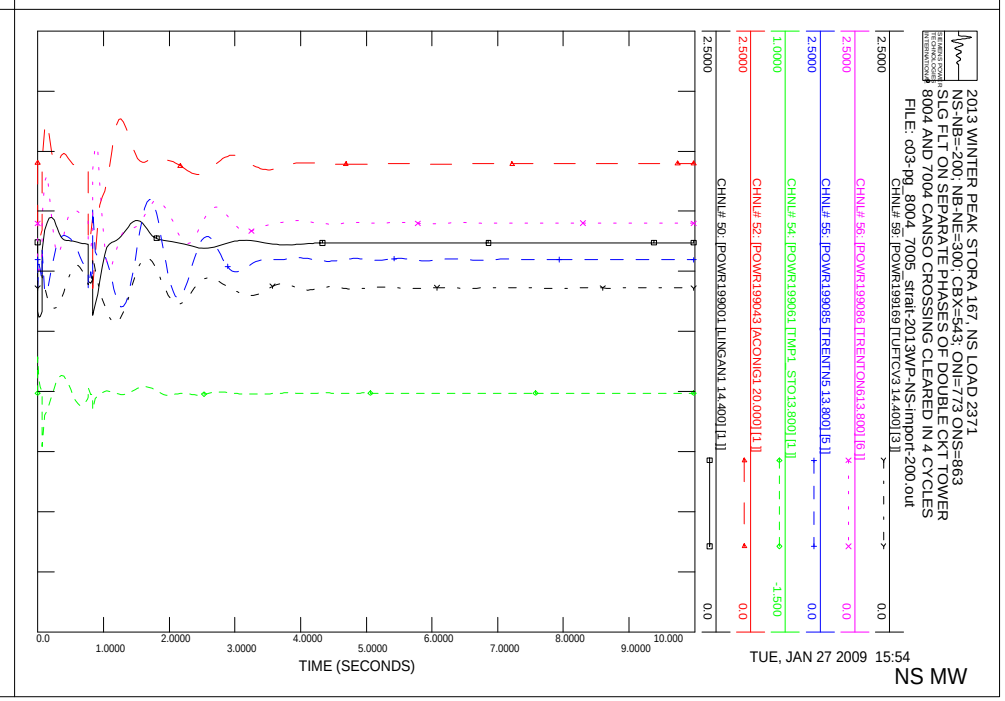
2013 WINTER PEAK STORA 167, NS LOAD 2371
NS-NB=-200; NB-NE=300; CBX=543; ONI=773 ONS=863
SLG FLT ON SEPARATE PHASES OF DOUBLE CKT TOWER
8004 AND 7004 CANSO CROSSING CLEARED IN 4 CYCLES
FILE: c03-pg_8004_7005_strait-2013WP-NS-import-200.out
CHNL# 59: [POWR199169 [TUFTCV3 14.400] [3]]
CHNL# 56: [POWR199086 [TRENTON613.800] [6]]
CHNL# 55: [POWR199085 [TRENTN5 13.800] [5]]
CHNL# 54: [POWR199061 [TMP1 STO13.800] [1]]
CHNL# 52: [POWR199043 [ACONIG1 20.000] [1]]
CHNL# 50: [POWR199001 [LINGAN1 14.400] [1]]
TIME (SECONDS)
TUE, JAN 27 2009 15:54
NS MW

2013 WINTER PEAK STORA 167, NS LOAD 2371
NS-NB=-200; NB-NE=300; CBX=543; ONI=773 ONS=863
SLG FLT ON SEPARATE PHASES OF DOUBLE CKT TOWER
8004 AND 7004 CANSO CROSSING CLEARED IN 4 CYCLES
FILE: c03-pg_8004_7005_strait-2013WP-NS-import-200.out
CHNL# 119: [VARS IR141-DIGBY]
CHNL# 118: [VARS IR137-STATIA]
CHNL# 117: [VARS IR114-GLENDHU]
CHNL# 116: [VARS IR84-DALHOUSIE]
CHNL# 115: [VARS IR82_NUTTBY]
CHNL# 114: [VARS IR45_AMHERST]
TIME (SECONDS)
TUE, JAN 27 2009 15:54
NS WIND MV

2013 WINTER PEAK STORA 167, NS LOAD 2371
NS-NB=-200; NB-NE=300; CBX=543; ONI=773 ONS=863
SLG FLT ON SEPARATE PHASES OF DOUBLE CKT TOWER
8004 AND 7004 CANSO CROSSING CLEARED IN 4 CYCLES
FILE: c03-pg_8004_7005_strait-2013WP-NS-import-200.out
CHNL# 79: [POWER IR141-DIGBY]
CHNL# 78: [POWER IR137-STATIA]
CHNL# 77: [POWER IR114-GLENDHU]
CHNL# 76: [POWER IR84-DALHOUSIE]
CHNL# 75: [POWER IR82_NUTTBY]
CHNL# 74: [POWER IR45_AMHERST]
TIME (SECONDS)
TUE, JAN 27 2009 15:54
NS WIND MW

2013 WINTER PEAK STORA 167, NS LOAD 2371
NS-NB=-200; NB-NE=300; CBX=543; ONI=773 ONS=863
SLG FLT ON SEPARATE PHASES OF DOUBLE CKT TOWER
8004 AND 7004 CANSO CROSSING CLEARED IN 4 CYCLES
FILE: c03-pg_8004_7005_strait-2013WP-NS-import-200.out
CHNL# 133: [VOLT199125 [ONSLOW 345.00]]
CHNL# 132: [VOLT199120 [HOPEWELL 345.00]]
CHNL# 131: [VOLT199045 [WOODBINE345.00]]
CHNL# 130: [VOLT190320 [SALBRY 345.00]]
CHNL# 128: [VOLT190004 [KESWICK 345.00]]
CHNL# 127: [VOLT 70002 [ORRINGTN345.00]]
TIME (SECONDS)
TUE, JAN 27 2009 15:54
"345KV VOLTAGE"

2013 WINTER PEAK STORA 167, NS LOAD 2371
NS-NB=-200; NB-NE=300; CBX=543; ONI=773 ONS=863
SLG FLT ON SEPARATE PHASES OF DOUBLE CKT TOWER
8004 AND 7004 CANSO CROSSING CLEARED IN 4 CYCLES
FILE: c03-pg_8004_7005_strait-2013WP-NS-import-200.out
CHNL# 125: 60*(1+[FREQ199125 [ONSLOW 345.00]])
CHNL# 124: 60*(1+[FREQ199120 [HOPEWELL 345.00]])
CHNL# 123: 60*(1+[FREQ199045 [WOODBINE345.00]])
CHNL# 122: 60*(1+[FREQ190320 [SALBRY 345.00]])
CHNL# 121: 60*(1+[FREQ190197 [C.COVE 345.00]])
CHNL# 120: 60*(1+[FREQ 70002 [ORRINGTN345.00]])
TIME (SECONDS)
TUE, JAN 27 2009 15:54
FREQUENCY HZ

2013 WINTER PEAK STORA 167, NS LOAD 2371
NS-NB=-200; NB-NE=300; CBX=543; ONI=773 ONS=863
SLG FLT ON SEPARATE PHASES OF DOUBLE CKT TOWER
8004 AND 7004 CANSO CROSSING CLEARED IN 4 CYCLES
FILE: c03-pg_8004_7005_strait-2013WP-NS-import-200.out
CHNL# 146: [VOLT199280 [TUSKET A138.00]]
CHNL# 145: [VOLT199193 [HHWAS 138.00]]
CHNL# 144: [VOLT199165 [TUFTCOVE138.00]]
CHNL# 143: [VOLT199138 [SPRNGHIL138.00]]
CHNL# 142: [VOLT199090 [SON-TREN138.00]]
CHNL# 141: [VOLT199051 [HASTINGS138.00]]
1.2000
0.70000
0.0
1.0000
2.0000
3.0000
4.0000
5.0000
6.0000
7.0000
8.0000
9.0000
10.000
TIME (SECONDS)
TUE, JAN 27 2009 15:54
138KV BUS VOLTS

2013 WINTER PEAK STORA 167, NS LOAD 2371
NS-NB=-200; NB-NE=300; CBX=543; ONI=773 ONS=863
SLG FLT ON SEPARATE PHASES OF DOUBLE CKT TOWER
8004 AND 7004 CANSO CROSSING CLEARED IN 4 CYCLES
FILE: c03-pg_8004_7005_strait-2013WP-NS-import-200.out
CHNL# 140: [VOLT199240 [BWATER A230.00]]
CHNL# 139: [VOLT199200 [BRUSHY 230.00]]
CHNL# 138: [VOLT199130 [ONSLOW 230.00]]
CHNL# 137: [VOLT199050 [HASTINGS230.00]]
CHNL# 136: [VOLT199044 [PT.ACONI230.00]]
CHNL# 135: [VOLT199000 [LINGAN 230.00]]
1.2000
0.70000
0.0
1.0000
2.0000
3.0000
4.0000
5.0000
6.0000
7.0000
8.0000
9.0000
10.000
TIME (SECONDS)
TUE, JAN 27 2009 15:54
230KV BUS VOLTS

2013 WINTER PEAK STORA 167, NS LOAD 2371
NS-NB=-200; NB-NE=300; CBX=543; ONI=773 ONS=863
SLG FLT ON SEPARATE PHASES OF DOUBLE CKT TOWER
8004 AND 7004 CANSO CROSSING CLEARED IN 4 CYCLES
FILE: c03-pg_8004_7005_strait-2013WP-NS-import-200.out
CHNL# 217: [L6513MW]
CHNL# 215: [L6503MW]
CHNL# 197: [L8003MW]
CHNL# 195: [L8004MW]
CHNL# 193: [L8001MW]
CHNL# 221: [L3001MW]
250.00
500.00
1000.0
0.0
-250.0
-1000.
0.0
1.0000
2.0000
3.0000
4.0000
5.0000
6.0000
7.0000
8.0000
9.0000
10.000
TIME (SECONDS)
TUE, JAN 27 2009 15:54
LINE FLOW MW

2013 WINTER PEAK STORA 167, NS LOAD 2371
NS-NB=-200; NB-NE=300; CBX=543; ONI=773 ONS=863
SLG FLT ON SEPARATE PHASES OF DOUBLE CKT TOWER
8004 AND 7004 CANSO CROSSING CLEARED IN 4 CYCLES
FILE: c03-pg_8004_7005_strait-2013WP-NS-import-200.out
CHNL# 154: [IR141-DIGBYH69.0 VOLTS]
CHNL# 153: [IR137-STATIG25.0 VOLTS]
CHNL# 152: [IR114-GLENDH138.0 VOLTS]
CHNL# 151: [IR84-DALHOHV230.0 VOLTS]
CHNL# 150: [IR82_NUTBHV69.0 VOLTS]
CHNL# 149: [IR45_AMHERTP138.0 VOLTS]
1.2000
0.70000
0.0
1.0000
2.0000
3.0000
4.0000
5.0000
6.0000
7.0000
8.0000
9.0000
10.000
TIME (SECONDS)
TUE, JAN 27 2009 15:54
WIND BUS VOLTS

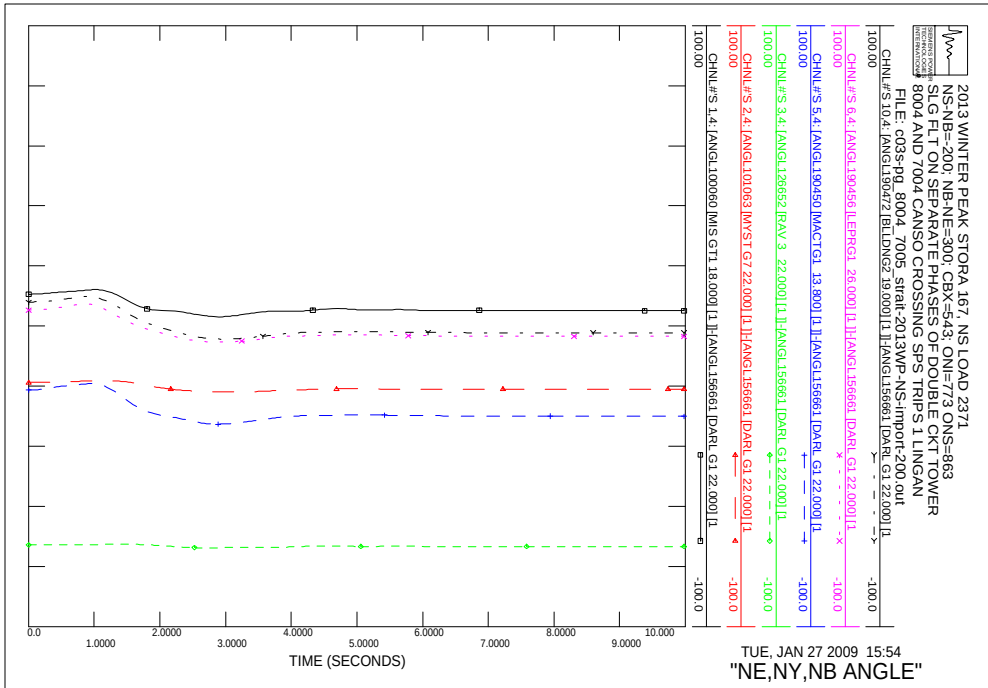
2013 WINTER PEAK STORA 167, NS LOAD 2371
NS-NB=-200; NB-NE=300; CBX=543; ONI=773 ONS=863
SLG FLT ON SEPARATE PHASES OF DOUBLE CKT TOWER
8004 AND 7004 CANSO CROSSING SPS TRIPS 1 LINGAN
FILE: c03s-pg_8004_7005_strait-2013WP-NS-import-200.out
CHNL#S 10,4: [ANGL190472 [BLLDNG2 19.000] [1]]-[ANGL156661 [DARL G1 22.000] [1
CHNL#S 6,4: [ANGL190456 [LEPRG1 26.000] [1]]-[ANGL156661 [DARL G1 22.000] [1
CHNL#S 5,4: [ANGL190450 [MACTG1 13.800] [1]]-[ANGL156661 [DARL G1 22.000] [1
CHNL#S 3,4: [ANGL126652 [RAV 3 22.000] [1]]-[ANGL156661 [DARL G1 22.000] [1
CHNL#S 2,4: [ANGL101063 [MYST G7 22.000] [1]]-[ANGL156661 [DARL G1 22.000] [1
CHNL#S 1,4: [ANGL100060 [MIS GT1 18.000] [1]]-[ANGL156661 [DARL G1 22.000] [1
100.00
-100.0
0.0
1.0000
2.0000
3.0000
4.0000
5.0000
6.0000
7.0000
8.0000
9.0000
10.000
TIME (SECONDS)
TUE, JAN 27 2009 15:54
"NE,NY,NB ANGLE"

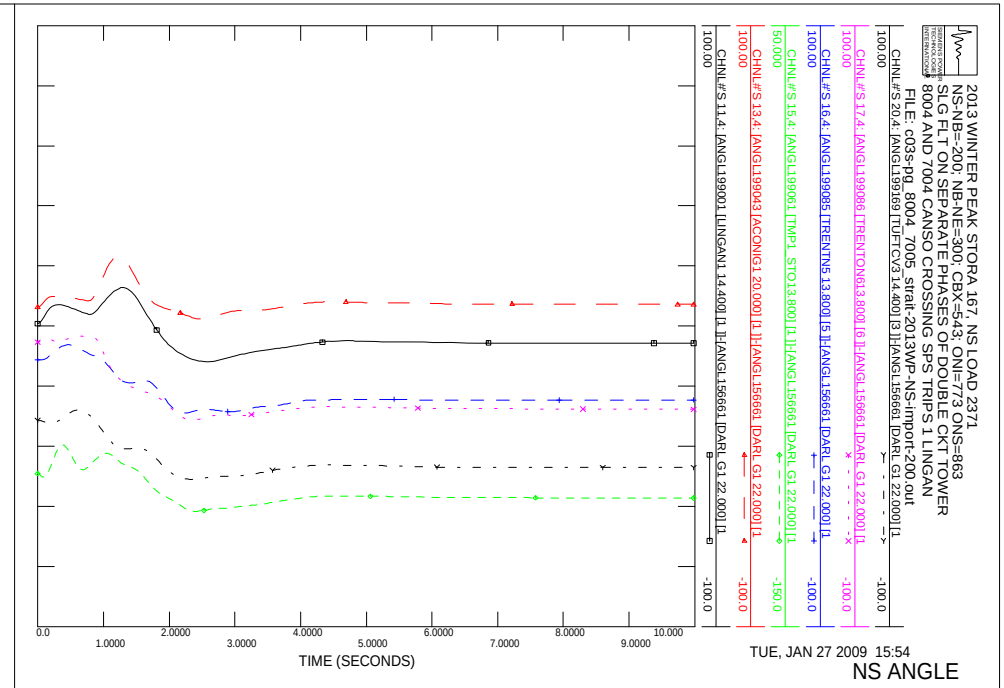
2013 WINTER PEAK STORA 167, NS LOAD 2371
NS-NB=-200; NB-NE=300; CBX=543; ONI=773 ONS=863
SLG FLT ON SEPARATE PHASES OF DOUBLE CKT TOWER
8004 AND 7004 CANSO CROSSING SPS TRIPS 1 LINGAN
FILE: c03s-pg_8004_7005_strait-2013WP-NS-import-200.out
CHNL#S 20,4: [ANGL199169 [TUFTCV3 14.400] [3]]-[ANGL156661 [DARL G1 22.000] [1
CHNL#S 17,4: [ANGL199086 [TRENTON613.800] [6]]-[ANGL156661 [DARL G1 22.000] [1
CHNL#S 16,4: [ANGL199085 [TRENTN5 13.800] [5]]-[ANGL156661 [DARL G1 22.000] [1
CHNL#S 15,4: [ANGL199061 [TMP1 STO13.800] [1]]-[ANGL156661 [DARL G1 22.000] [1
CHNL#S 13,4: [ANGL199043 [ACONIG1 20.000] [1]]-[ANGL156661 [DARL G1 22.000] [1
CHNL#S 11,4: [ANGL199001 [LINGAN1 14.400] [1]]-[ANGL156661 [DARL G1 22.000] [1
100.00
-100.0
50.000
-150.0
0.0
1.0000
2.0000
3.0000
4.0000
5.0000
6.0000
7.0000
8.0000
9.0000
10.000
TIME (SECONDS)
TUE, JAN 27 2009 15:54
NS ANGLE

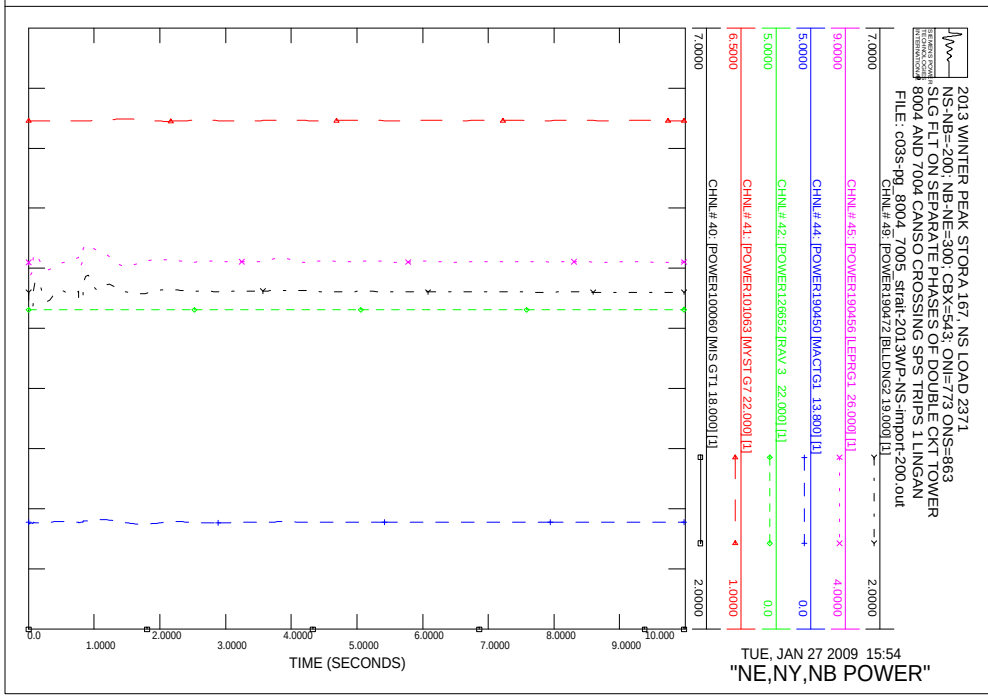
2013 WINTER PEAK STORA 167, NS LOAD 2371
NS-NB=-200; NB-NE=300; CBX=543; ONI=773 ONS=863
SLG FLT ON SEPARATE PHASES OF DOUBLE CKT TOWER
8004 AND 7004 CANSO CROSSING SPS TRIPS 1 LINGAN
FILE: c03s-pg_8004_7005_strait-2013WP-NS-import-200.out
CHNL# 49: [POWER190472 [BLLDNG2 19.000] [1]
CHNL# 45: [POWER190456 [LEPRG1 26.000] [1]
CHNL# 44: [POWER190450 [MACTG1 13.800] [1]
CHNL# 42: [POWER126652 [RAV 3 22.000] [1]
CHNL# 41: [POWER101063 [MYST G7 22.000] [1]
CHNL# 40: [POWER100060 [MIS GT1 18.000] [1]
7.0000
2.0000
9.0000
4.0000
5.0000
0.0
6.5000
1.0000
0.0
1.0000
2.0000
3.0000
4.0000
5.0000
6.0000
7.0000
8.0000
9.0000
10.000
TIME (SECONDS)
TUE, JAN 27 2009 15:54
"NE,NY,NB POWER"

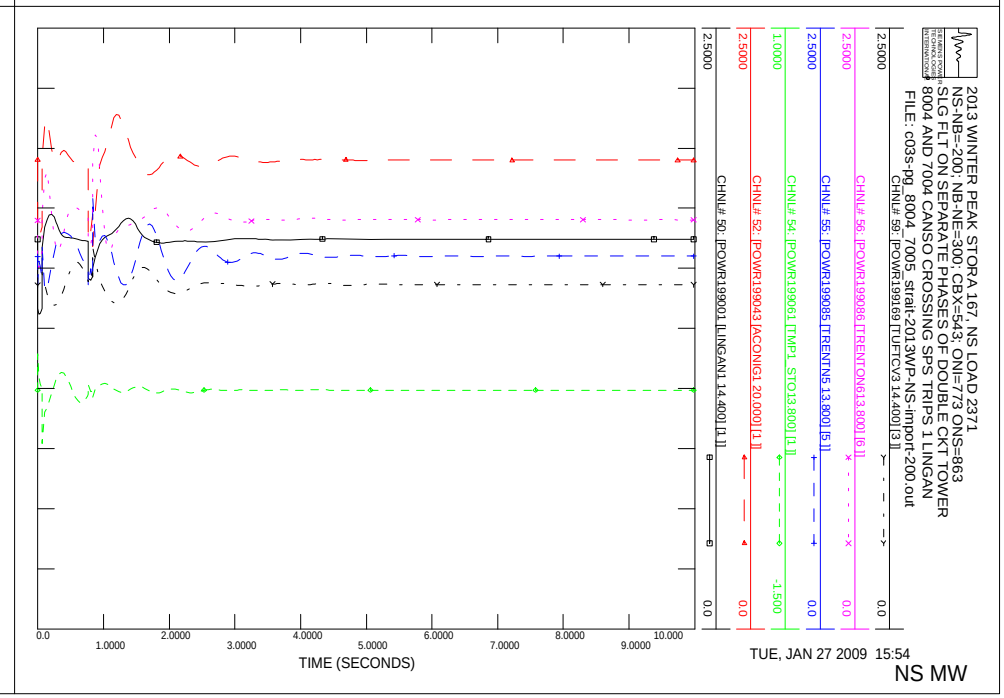
2013 WINTER PEAK STORA 167, NS LOAD 2371
NS-NB=-200; NB-NE=300; CBX=543; ONI=773 ONS=863
SLG FLT ON SEPARATE PHASES OF DOUBLE CKT TOWER
8004 AND 7004 CANSO CROSSING SPS TRIPS 1 LINGAN
FILE: c03s-pg_8004_7005_strait-2013WP-NS-import-200.out
CHNL# 59: [POWR199169 [TUFTCV3 14.400] [3]]
CHNL# 56: [POWR199086 [TRENTON613.800] [6]]
CHNL# 55: [POWR199085 [TRENTN5 13.800] [5]]
CHNL# 54: [POWR199061 [TMP1 STO13.800] [1]]
CHNL# 52: [POWR199043 [ACONIG1 20.000] [1]]
CHNL# 50: [POWR199001 [LINGAN1 14.400] [1]]
2.5000
0.0
1.0000
-1.500
0.0
1.0000
2.0000
3.0000
4.0000
5.0000
6.0000
7.0000
8.0000
9.0000
10.000
TIME (SECONDS)
TUE, JAN 27 2009 15:54
NS MW

2013 WINTER PEAK STORA 167, NS LOAD 2371
NS-NB=-200; NB-NE=300; CBX=543; ONI=773 ONS=863
SLG FLT ON SEPARATE PHASES OF DOUBLE CKT TOWER
8004 AND 7004 CANSO CROSSING SPS TRIPS 1 LINGAN
FILE: c03s-pg_8004_7005_strait-2013WP-NS-import-200.out
CHNL# 119: [VARS IR141-DIGBY]
CHNL# 118: [VARS IR137-STATIA]
CHNL# 117: [VARS IR114-GLENDHU]
CHNL# 116: [VARS IR84-DALHOUSIE]
CHNL# 115: [VARS IR82_NUTTBY]
CHNL# 114: [VARS IR45_AMHERST]
0.50000
-0.5000
0.0
1.0000
2.0000
3.0000
4.0000
5.0000
6.0000
7.0000
8.0000
9.0000
10.000
TIME (SECONDS)
TUE, JAN 27 2009 15:54
NS WIND MV

2013 WINTER PEAK STORA 167, NS LOAD 2371
NS-NB=-200; NB-NE=300; CBX=543; ONI=773 ONS=863
SLG FLT ON SEPARATE PHASES OF DOUBLE CKT TOWER
8004 AND 7004 CANSO CROSSING SPS TRIPS 1 LINGAN
FILE: c03s-pg_8004_7005_strait-2013WP-NS-import-200.out
CHNL# 79: [POWER IR141-DIGBY]
CHNL# 78: [POWER IR137-STATIA]
CHNL# 77: [POWER IR114-GLENDHU]
CHNL# 76: [POWER IR84-DALHOUSIE]
CHNL# 75: [POWER IR82_NUTTBY]
CHNL# 74: [POWER IR45_AMHERST]
1.0000
0.0
1.0000
2.0000
3.0000
4.0000
5.0000
6.0000
7.0000
8.0000
9.0000
10.000
TIME (SECONDS)
TUE, JAN 27 2009 15:54
NS WIND MW

2013 WINTER PEAK STORA 167, NS LOAD 2371
NS-NB=-200; NB-NE=300; CBX=543; ONI=773 ONS=863
SLG FLT ON SEPARATE PHASES OF DOUBLE CKT TOWER
8004 AND 7004 CANSO CROSSING SPS TRIPS 1 LINGAN
FILE: c03s-pg_8004_7005_strait-2013WP-NS-import-200.out
CHNL# 133: [VOLT199125 IONSLOW 345.00]
CHNL# 132: [VOLT199120 IHOPEWELL345.00]
CHNL# 131: [VOLT199045 IWOODBINE345.00]
CHNL# 130: [VOLT190320 ISALBRY 345.00]
CHNL# 128: [VOLT190004 IKESWICK 345.00]
CHNL# 127: [VOLT 70002 IORRINGTN345.00]
1.1000
0.90000
0.0
1.0000
2.0000
3.0000
4.0000
5.0000
6.0000
7.0000
8.0000
9.0000
10.000
TIME (SECONDS)
TUE, JAN 27 2009 15:54
"345KV VOLTAGE"

2013 WINTER PEAK STORA 167, NS LOAD 2371
NS-NB=-200; NB-NE=300; CBX=543; ONI=773 ONS=863
SLG FLT ON SEPARATE PHASES OF DOUBLE CKT TOWER
8004 AND 7004 CANSO CROSSING SPS TRIPS 1 LINGAN
FILE: c03s-pg_8004_7005_strait-2013WP-NS-import-200.out
CHNL# 125: 60*(1+[FREQ199125 IONSLOW 345.00])
CHNL# 124: 60*(1+[FREQ199120 IHOPEWELL345.00])
CHNL# 123: 60*(1+[FREQ199045 IWOODBINE345.00])
CHNL# 122: 60*(1+[FREQ190320 ISALBRY 345.00])
CHNL# 121: 60*(1+[FREQ190197 IC.COVE 345.00])
CHNL# 120: 60*(1+[FREQ 70002 IORRINGTN345.00])
60.500
59.500
0.0
1.0000
2.0000
3.0000
4.0000
5.0000
6.0000
7.0000
8.0000
9.0000
10.000
TIME (SECONDS)
TUE, JAN 27 2009 15:54
FREQUENCY HZ

2013 WINTER PEAK STORA 167, NS LOAD 2371
NS-NB=-200; NB-NE=300; CBX=543; ONI=773 ONS=863
SLG FLT ON SEPARATE PHASES OF DOUBLE CKT TOWER
8004 AND 7004 CANSO CROSSING SPS TRIPS 1 LINGAN
FILE: c03s-pg_8004_7005_strait-2013WP-NS-import-200.out
CHNL# 146: [VOLT199280 [TUSKET A138.00]]
CHNL# 145: [VOLT199193 [HHWAS 138.00]]
CHNL# 144: [VOLT199165 [TUFTCOVE138.00]]
CHNL# 143: [VOLT199138 [SPRNGHIL138.00]]
CHNL# 142: [VOLT199090 [SON-TREN138.00]]
CHNL# 141: [VOLT199051 [HASTINGS138.00]]
1.2000
0.70000
0.0
1.0000
2.0000
3.0000
4.0000
5.0000
6.0000
7.0000
8.0000
9.0000
10.000
TIME (SECONDS)
TUE, JAN 27 2009 15:54
138KV BUS VOLTS

2013 WINTER PEAK STORA 167, NS LOAD 2371
NS-NB=-200; NB-NE=300; CBX=543; ONI=773 ONS=863
SLG FLT ON SEPARATE PHASES OF DOUBLE CKT TOWER
8004 AND 7004 CANSO CROSSING SPS TRIPS 1 LINGAN
FILE: c03s-pg_8004_7005_strait-2013WP-NS-import-200.out
CHNL# 140: [VOLT199240 [BWATER A230.00]]
CHNL# 139: [VOLT199200 [BRUSHY 230.00]]
CHNL# 138: [VOLT199130 [ONSLOW 230.00]]
CHNL# 137: [VOLT199050 [HASTINGS230.00]]
CHNL# 136: [VOLT199044 [PT.ACONI230.00]]
CHNL# 135: [VOLT199000 [LINGAN 230.00]]
1.2000
0.70000
0.0
1.0000
2.0000
3.0000
4.0000
5.0000
6.0000
7.0000
8.0000
9.0000
10.000
TIME (SECONDS)
TUE, JAN 27 2009 15:54
230KV BUS VOLTS

2013 WINTER PEAK STORA 167, NS LOAD 2371
NS-NB=-200; NB-NE=300; CBX=543; ONI=773 ONS=863
SLG FLT ON SEPARATE PHASES OF DOUBLE CKT TOWER
8004 AND 7004 CANSO CROSSING SPS TRIPS 1 LINGAN
FILE: c03s-pg_8004_7005_strait-2013WP-NS-import-200.out
CHNL# 217: [L6513MW]
CHNL# 215: [L6503MW]
CHNL# 197: [L8003MW]
CHNL# 195: [L8004MW]
CHNL# 193: [L8001MW]
CHNL# 221: [L3001MW]
250.00
500.00
1000.0
0.0
-250.0
-1000.
0.0
1.0000
2.0000
3.0000
4.0000
5.0000
6.0000
7.0000
8.0000
9.0000
10.000
TIME (SECONDS)
TUE, JAN 27 2009 15:54
LINE FLOW MW

2013 WINTER PEAK STORA 167, NS LOAD 2371
NS-NB=-200; NB-NE=300; CBX=543; ONI=773 ONS=863
SLG FLT ON SEPARATE PHASES OF DOUBLE CKT TOWER
8004 AND 7004 CANSO CROSSING SPS TRIPS 1 LINGAN
FILE: c03s-pg_8004_7005_strait-2013WP-NS-import-200.out
CHNL# 154: [IR141-DIGBYH69.0 VOLTS]
CHNL# 153: [IR137-STATIG25.0 VOLTS]
CHNL# 152: [IR114-GLENDH138.0 VOLTS]
CHNL# 151: [IR84-DALHOHV230.0 VOLTS]
CHNL# 150: [IR82_NUTBHV69.0 VOLTS]
CHNL# 149: [IR45_AMHERTP138.0 VOLTS]
1.2000
0.70000
0.0
1.0000
2.0000
3.0000
4.0000
5.0000
6.0000
7.0000
8.0000
9.0000
10.000
TIME (SECONDS)
TUE, JAN 27 2009 15:54
WIND BUS VOLTS

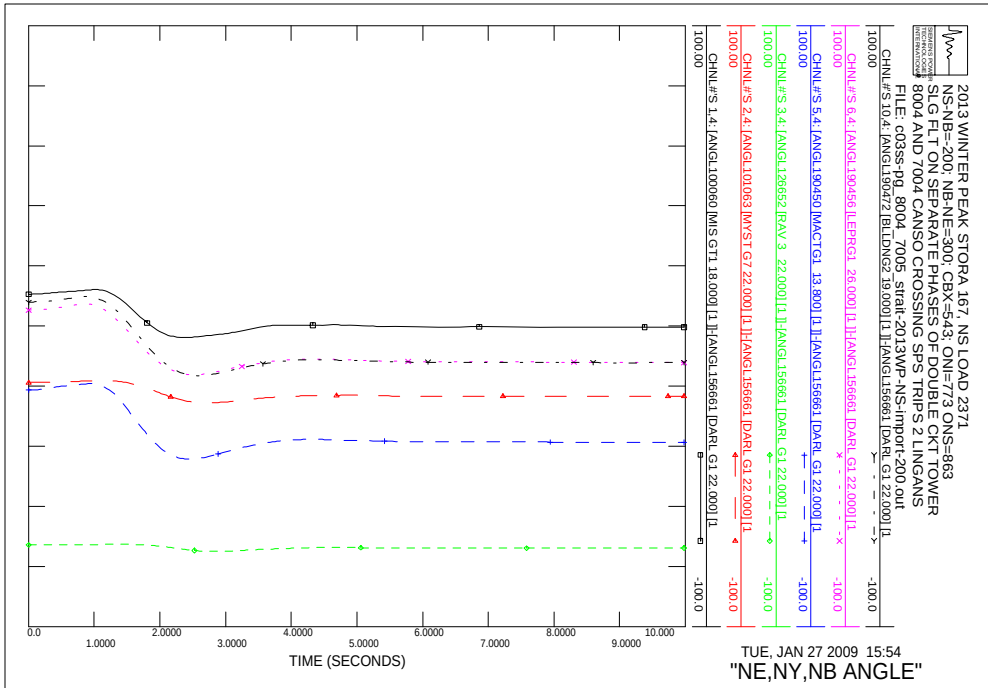
2013 WINTER PEAK STORA 167, NS LOAD 2371
NS-NB=-200; NB-NE=300; CBX=543; ONI=773 ONS=863
SLG FLT ON SEPARATE PHASES OF DOUBLE CKT TOWER
8004 AND 7004 CANSO CROSSING SPS TRIPS 2 LINGANS
FILE: c03ss-pg_8004_7005_strait-2013WP-NS-import-200.out
CHNL#S 10,4: [ANGL190472 [BLLDNG2 19.000] [1]]-[ANGL156661 [DARL G1 22.000] [1
CHNL#S 6,4: [ANGL190456 [LEPRG1 26.000] [1]]-[ANGL156661 [DARL G1 22.000] [1
CHNL#S 5,4: [ANGL190450 [MACTG1 13.800] [1]]-[ANGL156661 [DARL G1 22.000] [1
CHNL#S 3,4: [ANGL126652 [RAV 3 22.000] [1]]-[ANGL156661 [DARL G1 22.000] [1
CHNL#S 2,4: [ANGL101063 [MYST G7 22.000] [1]]-[ANGL156661 [DARL G1 22.000] [1
CHNL#S 1,4: [ANGL100060 [MIS GT1 18.000] [1]]-[ANGL156661 [DARL G1 22.000] [1
100.00
-100.0
TIME (SECONDS)
TUE, JAN 27 2009 15:54
"NE,NY,NB ANGLE"

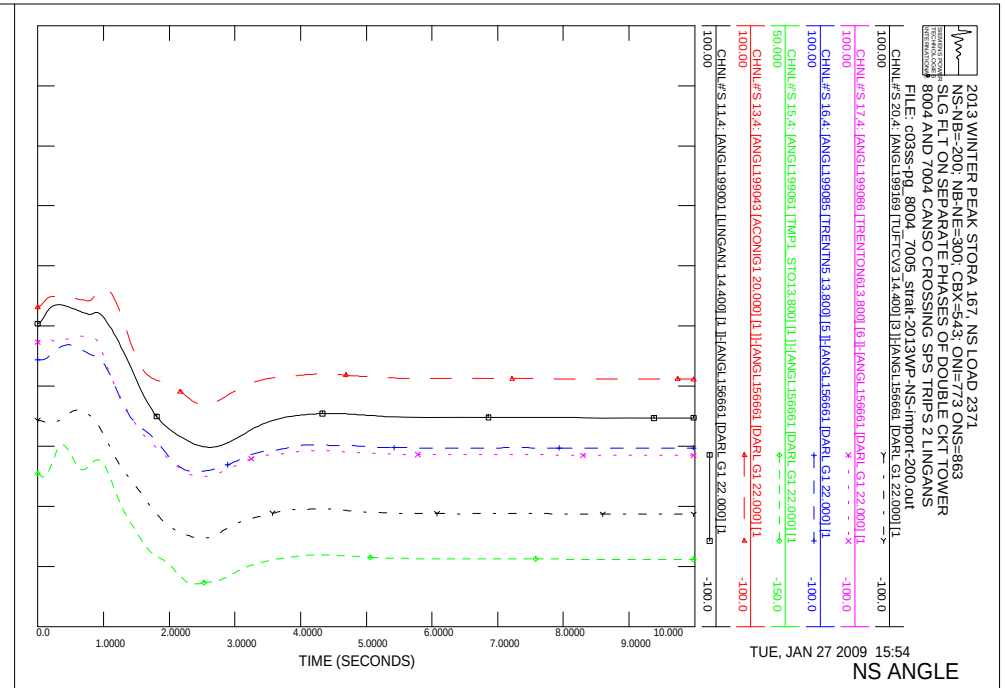
2013 WINTER PEAK STORA 167, NS LOAD 2371
NS-NB=-200; NB-NE=300; CBX=543; ONI=773 ONS=863
SLG FLT ON SEPARATE PHASES OF DOUBLE CKT TOWER
8004 AND 7004 CANSO CROSSING SPS TRIPS 2 LINGANS
FILE: c03ss-pg_8004_7005_strait-2013WP-NS-import-200.out
CHNL#S 20,4: [ANGL199169 [TUFTCV3 14.400] [3]]-[ANGL156661 [DARL G1 22.000] [1
CHNL#S 17,4: [ANGL199086 [TRENTON613.800] [6]]-[ANGL156661 [DARL G1 22.000] [1
CHNL#S 16,4: [ANGL199085 [TRENTN5 13.800] [5]]-[ANGL156661 [DARL G1 22.000] [1
CHNL#S 15,4: [ANGL199061 [TMP1 STO13.800] [1]]-[ANGL156661 [DARL G1 22.000] [1
CHNL#S 13,4: [ANGL199043 [ACONIG1 20.000] [1]]-[ANGL156661 [DARL G1 22.000] [1
CHNL#S 11,4: [ANGL199001 [LINGAN1 14.400] [1]]-[ANGL156661 [DARL G1 22.000] [1
100.00
-100.0
TIME (SECONDS)
TUE, JAN 27 2009 15:54
NS ANGLE

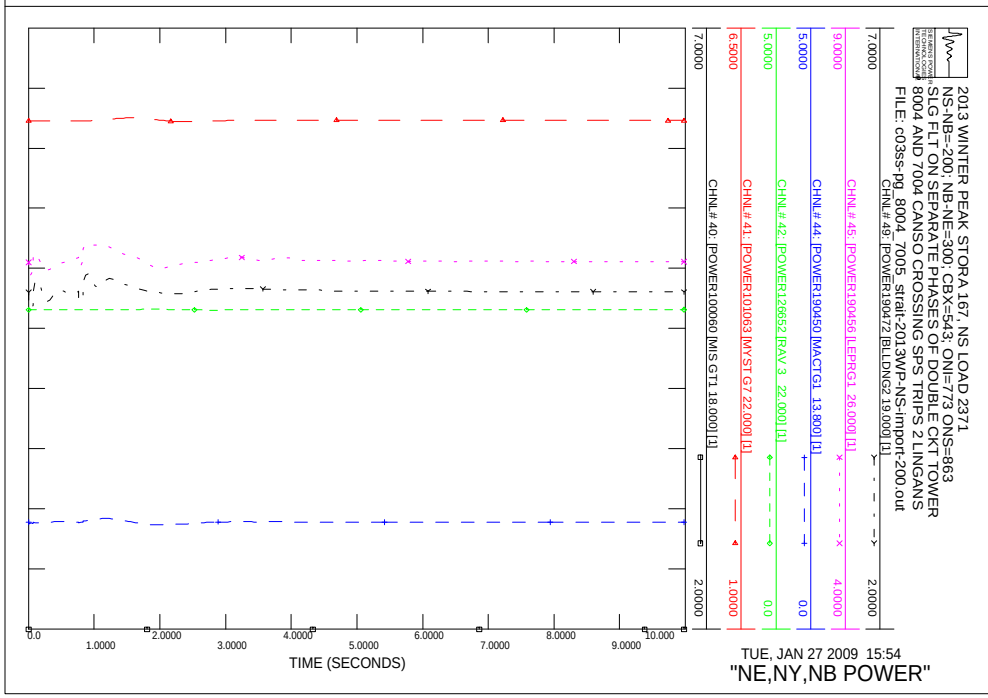
2013 WINTER PEAK STORA 167, NS LOAD 2371
NS-NB=-200; NB-NE=300; CBX=543; ONI=773 ONS=863
SLG FLT ON SEPARATE PHASES OF DOUBLE CKT TOWER
8004 AND 7004 CANSO CROSSING SPS TRIPS 2 LINGANS
FILE: c03ss-pg_8004_7005_strait-2013WP-NS-import-200.out
CHNL# 49: [POWER190472 [BLLDNG2 19.000] [1]]
CHNL# 45: [POWER190456 [LEPRG1 26.000] [1]]
CHNL# 44: [POWER190450 [MACTG1 13.800] [1]]
CHNL# 42: [POWER126652 [RAV 3 22.000] [1]]
CHNL# 41: [POWER101063 [MYST G7 22.000] [1]]
CHNL# 40: [POWER100060 [MIS GT1 18.000] [1]]
7.0000
2.0000
TIME (SECONDS)
TUE, JAN 27 2009 15:54
"NE,NY,NB POWER"

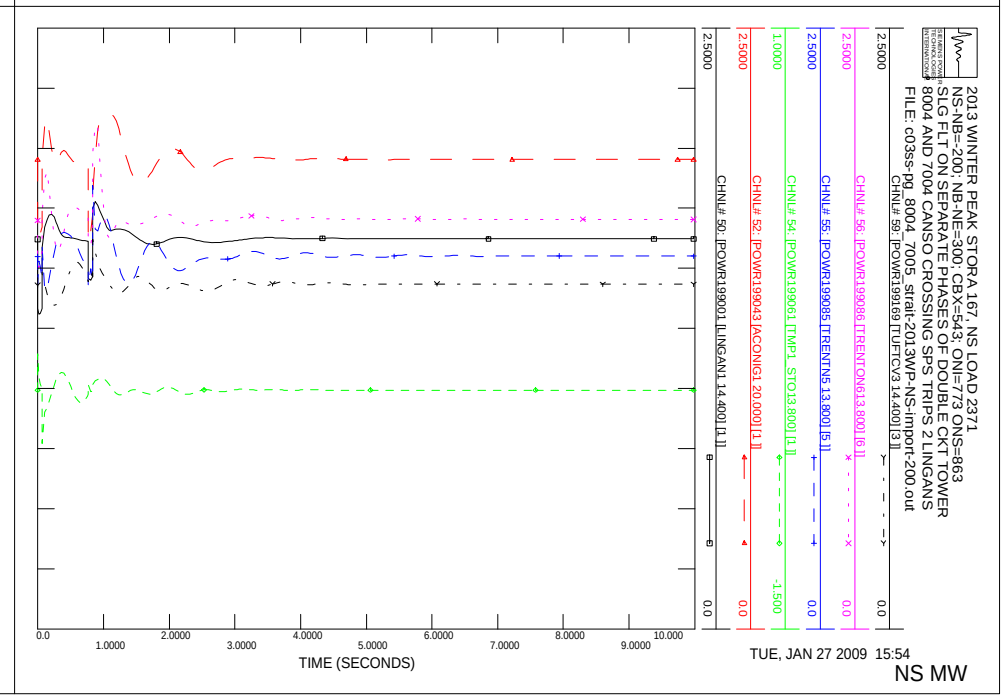
2013 WINTER PEAK STORA 167, NS LOAD 2371
NS-NB=-200; NB-NE=300; CBX=543; ONI=773 ONS=863
SLG FLT ON SEPARATE PHASES OF DOUBLE CKT TOWER
8004 AND 7004 CANSO CROSSING SPS TRIPS 2 LINGANS
FILE: c03ss-pg_8004_7005_strait-2013WP-NS-import-200.out
CHNL# 59: [POWR199169 [TUFTCV3 14.400] [3]]
CHNL# 56: [POWR199086 [TRENTON613.800] [6]]
CHNL# 55: [POWR199085 [TRENTN5 13.800] [5]]
CHNL# 54: [POWR199061 [TMP1 STO13.800] [1]]
CHNL# 52: [POWR199043 [ACONIG1 20.000] [1]]
CHNL# 50: [POWR199001 [LINGAN1 14.400] [1]]
2.5000
0.0
TIME (SECONDS)
TUE, JAN 27 2009 15:54
NS MW

2013 WINTER PEAK STORA 167, NS LOAD 2371
NS-NB=-200; NB-NE=300; CBX=543; ONI=773 ONS=863
SLG FLT ON SEPARATE PHASES OF DOUBLE CKT TOWER
8004 AND 7004 CANSO CROSSING SPS TRIPS 2 LINGANS
FILE: c03ss-pg_8004_7005_strait-2013WP-NS-import-200.out
CHNL# 119: [VARS IR141-DIGBY]
CHNL# 118: [VARS IR137-STATIA]
CHNL# 117: [VARS IR114-GLENDHU]
CHNL# 116: [VARS IR84-DALHOUSIE]
CHNL# 115: [VARS IR82_NUTTBY]
CHNL# 114: [VARS IR45_AMHERST]
TIME (SECONDS)
TUE, JAN 27 2009 15:54
NS WIND MV

2013 WINTER PEAK STORA 167, NS LOAD 2371
NS-NB=-200; NB-NE=300; CBX=543; ONI=773 ONS=863
SLG FLT ON SEPARATE PHASES OF DOUBLE CKT TOWER
8004 AND 7004 CANSO CROSSING SPS TRIPS 2 LINGANS
FILE: c03ss-pg_8004_7005_strait-2013WP-NS-import-200.out
CHNL# 79: [POWER IR141-DIGBY]
CHNL# 78: [POWER IR137-STATIA]
CHNL# 77: [POWER IR114-GLENDHU]
CHNL# 76: [POWER IR84-DALHOUSIE]
CHNL# 75: [POWER IR82_NUTTBY]
CHNL# 74: [POWER IR45_AMHERST]
TIME (SECONDS)
TUE, JAN 27 2009 15:54
NS WIND MW

2013 WINTER PEAK STORA 167, NS LOAD 2371
NS-NB=-200; NB-NE=300; CBX=543; ONI=773 ONS=863
SLG FLT ON SEPARATE PHASES OF DOUBLE CKT TOWER
8004 AND 7004 CANSO CROSSING SPS TRIPS 2 LINGANS
FILE: c03ss-pg_8004_7005_strait-2013WP-NS-import-200.out
CHNL# 133: [VOLT199125 [ONSLOW 345.00]]
CHNL# 132: [VOLT199120 [HOPEWELL 345.00]]
CHNL# 131: [VOLT199045 [WOODBINE345.00]]
CHNL# 130: [VOLT190320 [SALBRY 345.00]]
CHNL# 128: [VOLT190004 [KESWICK 345.00]]
CHNL# 127: [VOLT 70002 [ORRINGTN345.00]]
TIME (SECONDS)
TUE, JAN 27 2009 15:54
"345KV VOLTAGE"

2013 WINTER PEAK STORA 167, NS LOAD 2371
NS-NB=-200; NB-NE=300; CBX=543; ONI=773 ONS=863
SLG FLT ON SEPARATE PHASES OF DOUBLE CKT TOWER
8004 AND 7004 CANSO CROSSING SPS TRIPS 2 LINGANS
FILE: c03ss-pg_8004_7005_strait-2013WP-NS-import-200.out
CHNL# 125: 60*(1+[FREQ199125 [ONSLOW 345.00]])
CHNL# 124: 60*(1+[FREQ199120 [HOPEWELL 345.00]])
CHNL# 123: 60*(1+[FREQ199045 [WOODBINE345.00]])
CHNL# 122: 60*(1+[FREQ190320 [SALBRY 345.00]])
CHNL# 121: 60*(1+[FREQ190197 [C.COVE 345.00]])
CHNL# 120: 60*(1+[FREQ 70002 [ORRINGTN345.00]])
TIME (SECONDS)
TUE, JAN 27 2009 15:54
FREQUENCY HZ

2013 WINTER PEAK STORA 167, NS LOAD 2371
NS-NB=-200; NB-NE=300; CBX=543; ONI=773 ONS=863
SLG FLT ON SEPARATE PHASES OF DOUBLE CKT TOWER
8004 AND 7004 CANSO CROSSING SPS TRIPS 2 LINGANS
FILE: c03ss-pg_8004_7005_strait-2013WP-NS-import-200.out
CHNL# 146: [VOLT199280 [TUSKET A138.00]]
CHNL# 145: [VOLT199193 [HHWAS 138.00]]
CHNL# 144: [VOLT199165 [TUFTCOVE138.00]]
CHNL# 143: [VOLT199138 [SPRNGHILL138.00]]
CHNL# 142: [VOLT199090 [50N-TREN138.00]]
CHNL# 141: [VOLT199051 [HASTINGS138.00]]
TIME (SECONDS)
TUE, JAN 27 2009 15:54
138KV BUS VOLTS

2013 WINTER PEAK STORA 167, NS LOAD 2371
NS-NB=-200; NB-NE=300; CBX=543; ONI=773 ONS=863
SLG FLT ON SEPARATE PHASES OF DOUBLE CKT TOWER
8004 AND 7004 CANSO CROSSING SPS TRIPS 2 LINGANS
FILE: c03ss-pg_8004_7005_strait-2013WP-NS-import-200.out
CHNL# 140: [VOLT199240 [BWATER A230.00]]
CHNL# 139: [VOLT199200 [BRUSHY 230.00]]
CHNL# 138: [VOLT199130 [ONSLOW 230.00]]
CHNL# 137: [VOLT199050 [HASTINGS230.00]]
CHNL# 136: [VOLT199044 [PT.ACONI230.00]]
CHNL# 135: [VOLT199000 [LINGAN 230.00]]
TIME (SECONDS)
TUE, JAN 27 2009 15:54
230KV BUS VOLTS

2013 WINTER PEAK STORA 167, NS LOAD 2371
NS-NB=-200; NB-NE=300; CBX=543; ONI=773 ONS=863
SLG FLT ON SEPARATE PHASES OF DOUBLE CKT TOWER
8004 AND 7004 CANSO CROSSING SPS TRIPS 2 LINGANS
FILE: c03ss-pg_8004_7005_strait-2013WP-NS-import-200.out
CHNL# 217: [L6533MW]
CHNL# 215: [L6503MW]
CHNL# 197: [L8003MW]
CHNL# 195: [L8004MW]
CHNL# 193: [L8001MW]
CHNL# 221: [L3001MW]
TIME (SECONDS)
TUE, JAN 27 2009 15:54
LINE FLOW MW

2013 WINTER PEAK STORA 167, NS LOAD 2371
NS-NB=-200; NB-NE=300; CBX=543; ONI=773 ONS=863
SLG FLT ON SEPARATE PHASES OF DOUBLE CKT TOWER
8004 AND 7004 CANSO CROSSING SPS TRIPS 2 LINGANS
FILE: c03ss-pg_8004_7005_strait-2013WP-NS-import-200.out
CHNL# 154: [IR141-DIGBYH69.0 VOLTS]
CHNL# 153: [IR137-STATIG25.0 VOLTS]
CHNL# 152: [IR114-GLENDH138.0 VOLTS]
CHNL# 151: [IR84-DALHOHV230.0 VOLTS]
CHNL# 150: [IR82_NUTBHV69.0 VOLTS]
CHNL# 149: [IR45_AMHERTP138.0 VOLTS]
TIME (SECONDS)
TUE, JAN 27 2009 15:54
WIND BUS VOLTS

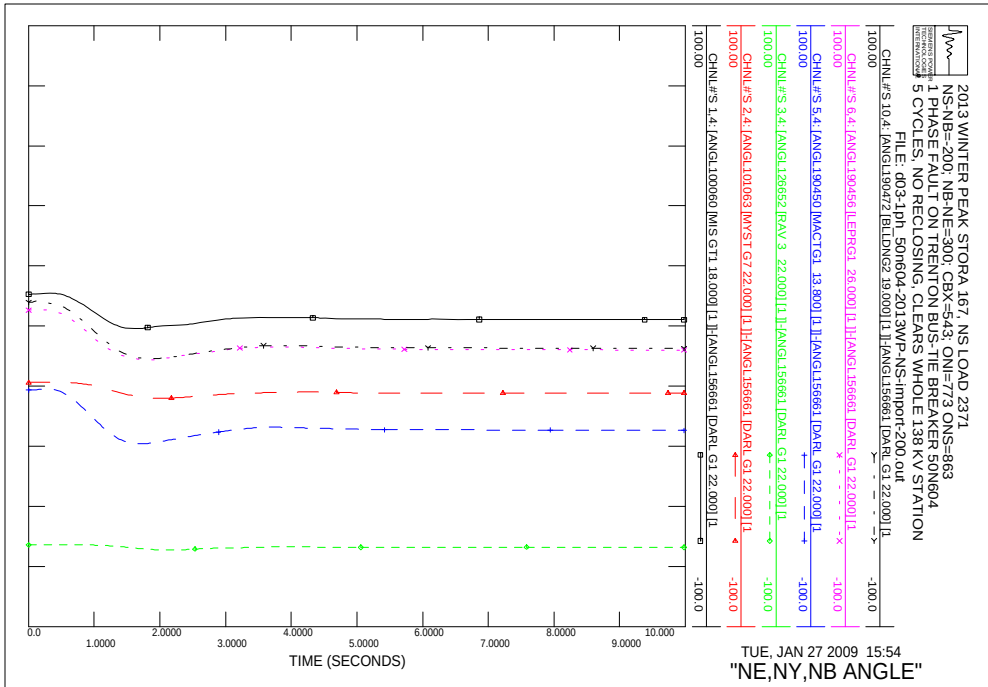
2013 WINTER PEAK STORA 167, NS LOAD 2371
NS-NB=-200; NB-NE=300; CBX=543; ONI=773 ONS=863
1 PHASE FAULT ON TRENTON BUS-TIE BREAKER 50N604
5 CYCLES, NO RECLOSING, CLEARS WHOLE 138 KV STATION
FILE: d03-1ph_50n604-2013WP-NS-import-200.out
CHNL#'S 10,4: [ANGL190472 [BLLDNG2 19.000] [1]]-[ANGL156661 [DARL G1 22.000] [1
CHNL#'S 6,4: [ANGL190456 [LEPRG1 26.000] [1]]-[ANGL156661 [DARL G1 22.000] [1
CHNL#'S 5,4: [ANGL190450 [MACTG1 13.800] [1]]-[ANGL156661 [DARL G1 22.000] [1
CHNL#'S 3,4: [ANGL126652 [RAV 3 22.000] [1]]-[ANGL156661 [DARL G1 22.000] [1
CHNL#'S 2,4: [ANGL101063 [MYST G7 22.000] [1]]-[ANGL156661 [DARL G1 22.000] [1
CHNL#'S 1,4: [ANGL100060 [MIS GT1 18.000] [1]]-[ANGL156661 [DARL G1 22.000] [1
100.00
-100.0
0.0
1.0000
2.0000
3.0000
4.0000
5.0000
6.0000
7.0000
8.0000
9.0000
10.000
TIME (SECONDS)
TUE, JAN 27 2009 15:54
"NE,NY,NB ANGLE"

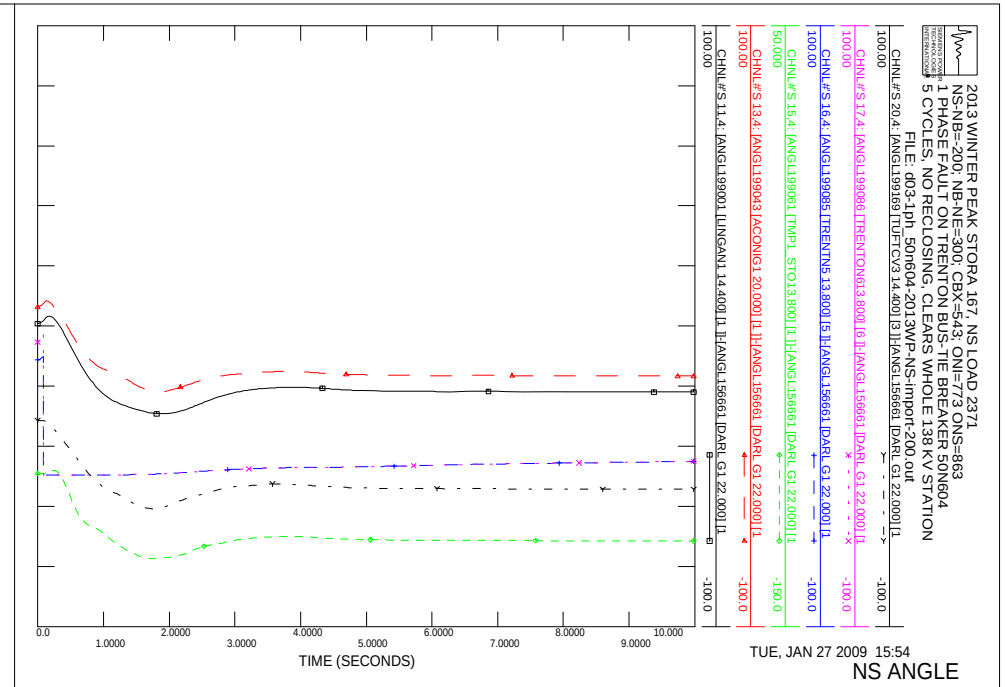
2013 WINTER PEAK STORA 167, NS LOAD 2371
NS-NB=-200; NB-NE=300; CBX=543; ONI=773 ONS=863
1 PHASE FAULT ON TRENTON BUS-TIE BREAKER 50N604
5 CYCLES, NO RECLOSING, CLEARS WHOLE 138 KV STATION
FILE: d03-1ph_50n604-2013WP-NS-import-200.out
CHNL#'S 20,4: [ANGL199169 [TUFTCV3 14.400] [3]]-[ANGL156661 [DARL G1 22.000] [1
CHNL#'S 17,4: [ANGL199086 [TRENTON613.800] [6]]-[ANGL156661 [DARL G1 22.000] [1
CHNL#'S 16,4: [ANGL199085 [TRENTN5 13.800] [5]]-[ANGL156661 [DARL G1 22.000] [1
CHNL#'S 15,4: [ANGL199061 [TMP1 STO13.800] [1]]-[ANGL156661 [DARL G1 22.000] [1
CHNL#'S 13,4: [ANGL199043 [ACONIG1 20.000] [1]]-[ANGL156661 [DARL G1 22.000] [1
CHNL#'S 11,4: [ANGL199001 [LINGAN1 14.400] [1]]-[ANGL156661 [DARL G1 22.000] [1
100.00
-100.0
50.000
-150.0
0.0
1.0000
2.0000
3.0000
4.0000
5.0000
6.0000
7.0000
8.0000
9.0000
10.000
TIME (SECONDS)
TUE, JAN 27 2009 15:54
NS ANGLE

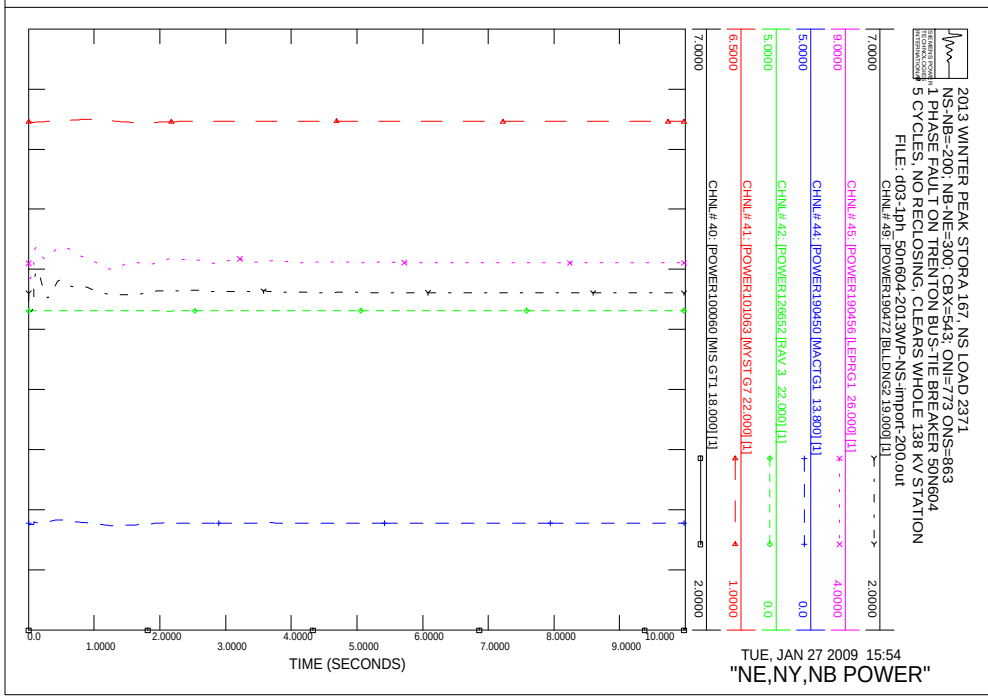
2013 WINTER PEAK STORA 167, NS LOAD 2371
NS-NB=-200; NB-NE=300; CBX=543; ONI=773 ONS=863
1 PHASE FAULT ON TRENTON BUS-TIE BREAKER 50N604
5 CYCLES, NO RECLOSING, CLEARS WHOLE 138 KV STATION
FILE: d03-1ph_50n604-2013WP-NS-import-200.out
CHNL# 49: [POWER190472 [BLLDNG2 19.000] [1]]
CHNL# 45: [POWER190456 [LEPRG1 26.000] [1]]
CHNL# 44: [POWER190450 [MACTG1 13.800] [1]]
CHNL# 42: [POWER126652 [RAV 3 22.000] [1]]
CHNL# 41: [POWER101063 [MYST G7 22.000] [1]]
CHNL# 40: [POWER100060 [MIS GT1 18.000] [1]]
7.0000
2.0000
9.0000
4.0000
5.0000
0.0
6.5000
1.0000
0.0
1.0000
2.0000
3.0000
4.0000
5.0000
6.0000
7.0000
8.0000
9.0000
10.000
TIME (SECONDS)
TUE, JAN 27 2009 15:54
"NE,NY,NB POWER"

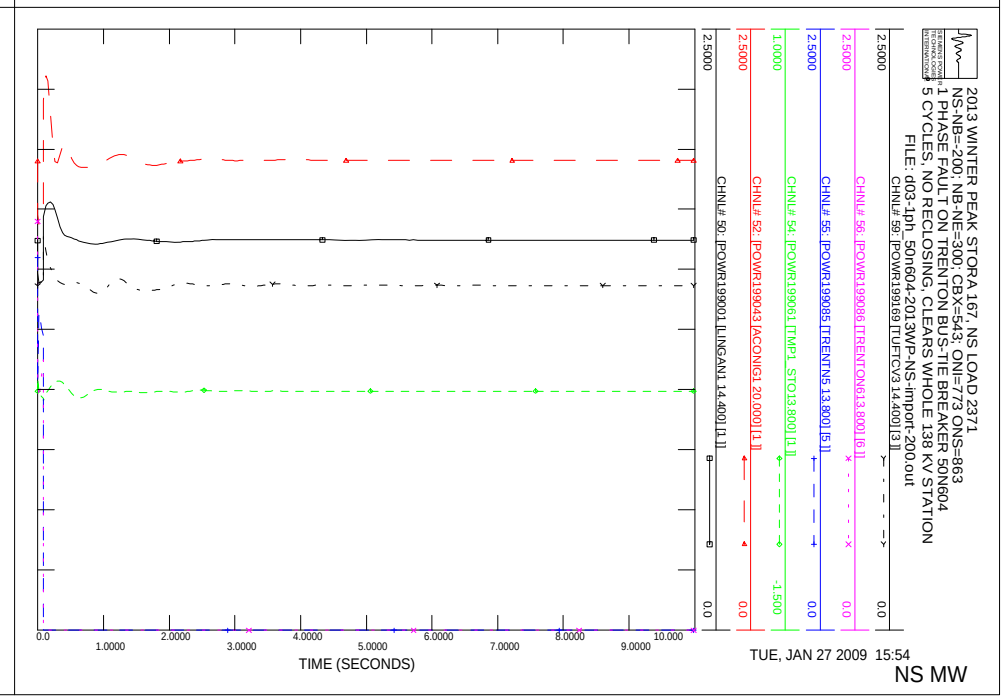
2013 WINTER PEAK STORA 167, NS LOAD 2371
NS-NB=-200; NB-NE=300; CBX=543; ONI=773 ONS=863
1 PHASE FAULT ON TRENTON BUS-TIE BREAKER 50N604
5 CYCLES, NO RECLOSING, CLEARS WHOLE 138 KV STATION
FILE: d03-1ph_50n604-2013WP-NS-import-200.out
CHNL# 59: [POWR199169 [TUFTCV3 14.400] [3]]
CHNL# 56: [POWR199086 [TRENTON613.800] [6]]
CHNL# 55: [POWR199085 [TRENTN5 13.800] [5]]
CHNL# 54: [POWR199061 [TMP1 STO13.800] [1]]
CHNL# 52: [POWR199043 [ACONIG1 20.000] [1]]
CHNL# 50: [POWR199001 [LINGAN1 14.400] [1]]
2.5000
0.0
1.0000
-1.500
0.0
1.0000
2.0000
3.0000
4.0000
5.0000
6.0000
7.0000
8.0000
9.0000
10.000
TIME (SECONDS)
TUE, JAN 27 2009 15:54
NS MW

2013 WINTER PEAK STORA 167, NS LOAD 2371
NS-NB=-200; NB-NE=300; CBX=543; ONI=773 ONS=863
1 PHASE FAULT ON TRENTON BUS-TIE BREAKER 50N604
5 CYCLES, NO RECLOSING, CLEARS WHOLE 138 KV STATION
FILE: d03-1ph_50n604-2013WP-NS-import-200.out
CHNL# 119: [VARS IR141-DIGBY]
CHNL# 118: [VARS IR137-STATIA]
CHNL# 117: [VARS IR114-GLENDHU]
CHNL# 116: [VARS IR84-DALHOUSIE]
CHNL# 115: [VARS IR82_NUTTBY]
CHNL# 114: [VARS IR45_AMHERST]
TIME (SECONDS)
TUE, JAN 27 2009 15:54
NS WIND MV

2013 WINTER PEAK STORA 167, NS LOAD 2371
NS-NB=-200; NB-NE=300; CBX=543; ONI=773 ONS=863
1 PHASE FAULT ON TRENTON BUS-TIE BREAKER 50N604
5 CYCLES, NO RECLOSING, CLEARS WHOLE 138 KV STATION
FILE: d03-1ph_50n604-2013WP-NS-import-200.out
CHNL# 79: [POWER IR141-DIGBY]
CHNL# 78: [POWER IR137-STATIA]
CHNL# 77: [POWER IR114-GLENDHU]
CHNL# 76: [POWER IR84-DALHOUSIE]
CHNL# 75: [POWER IR82_NUTTBY]
CHNL# 74: [POWER IR45_AMHERST]
TIME (SECONDS)
TUE, JAN 27 2009 15:54
NS WIND MW

2013 WINTER PEAK STORA 167, NS LOAD 2371
NS-NB=-200; NB-NE=300; CBX=543; ONI=773 ONS=863
1 PHASE FAULT ON TRENTON BUS-TIE BREAKER 50N604
5 CYCLES, NO RECLOSING, CLEARS WHOLE 138 KV STATION
FILE: d03-1ph_50n604-2013WP-NS-import-200.out
CHNL# 133: [VOLT199125 IONSLOW 345.00]
CHNL# 132: [VOLT199120 [HOPEWELL 345.00]
CHNL# 131: [VOLT199045 [WOODBINE345.00]
CHNL# 130: [VOLT190320 [SALBRY 345.00]
CHNL# 128: [VOLT190004 [KESWICK 345.00]
CHNL# 127: [VOLT 70002 [ORRINGTN345.00]
TIME (SECONDS)
TUE, JAN 27 2009 15:54
"345KV VOLTAGE"

2013 WINTER PEAK STORA 167, NS LOAD 2371
NS-NB=-200; NB-NE=300; CBX=543; ONI=773 ONS=863
1 PHASE FAULT ON TRENTON BUS-TIE BREAKER 50N604
5 CYCLES, NO RECLOSING, CLEARS WHOLE 138 KV STATION
FILE: d03-1ph_50n604-2013WP-NS-import-200.out
CHNL# 125: 60*(1+[FREQ199125 IONSLOW 345.00])
CHNL# 124: 60*(1+[FREQ199120 [HOPEWELL 345.00])
CHNL# 123: 60*(1+[FREQ199045 [WOODBINE345.00])
CHNL# 122: 60*(1+[FREQ190320 [SALBRY 345.00])
CHNL# 121: 60*(1+[FREQ190197 [C.COVE 345.00])
CHNL# 120: 60*(1+[FREQ 70002 [ORRINGTN345.00])
TIME (SECONDS)
TUE, JAN 27 2009 15:54
FREQUENCY HZ

2013 WINTER PEAK STORA 167, NS LOAD 2371
NS-NB=-200; NB-NE=300; CBX=543; ONI=773 ONS=863
1 PHASE FAULT ON TRENTON BUS-TIE BREAKER 50N604
5 CYCLES, NO RECLOSING, CLEARS WHOLE 138 KV STATION
FILE: d03-1ph_50n604-2013WP-NS-import-200.out
CHNL# 146: [VOLT199280 [TUSKET A138.00]]
CHNL# 145: [VOLT199193 [HHWAS 138.00]]
CHNL# 144: [VOLT199165 [TUFTCOVE138.00]]
CHNL# 143: [VOLT199138 [SPRNGHILL138.00]]
CHNL# 142: [VOLT199090 [50N-TREN138.00]]
CHNL# 141: [VOLT199051 [HASTINGS138.00]]
1.2000
0.70000
0.0
1.0000
2.0000
3.0000
4.0000
5.0000
6.0000
7.0000
8.0000
9.0000
10.000
TIME (SECONDS)
TUE, JAN 27 2009 15:54
138KV BUS VOLTS

2013 WINTER PEAK STORA 167, NS LOAD 2371
NS-NB=-200; NB-NE=300; CBX=543; ONI=773 ONS=863
1 PHASE FAULT ON TRENTON BUS-TIE BREAKER 50N604
5 CYCLES, NO RECLOSING, CLEARS WHOLE 138 KV STATION
FILE: d03-1ph_50n604-2013WP-NS-import-200.out
CHNL# 140: [VOLT199240 [BWATER A230.00]]
CHNL# 139: [VOLT199200 [BRUSHY 230.00]]
CHNL# 138: [VOLT199130 [ONSLOW 230.00]]
CHNL# 137: [VOLT199050 [HASTINGS230.00]]
CHNL# 136: [VOLT199044 [PT.ACONI230.00]]
CHNL# 135: [VOLT199000 [LINGAN 230.00]]
1.2000
0.70000
0.0
1.0000
2.0000
3.0000
4.0000
5.0000
6.0000
7.0000
8.0000
9.0000
10.000
TIME (SECONDS)
TUE, JAN 27 2009 15:54
230KV BUS VOLTS

2013 WINTER PEAK STORA 167, NS LOAD 2371
NS-NB=-200; NB-NE=300; CBX=543; ONI=773 ONS=863
1 PHASE FAULT ON TRENTON BUS-TIE BREAKER 50N604
5 CYCLES, NO RECLOSING, CLEARS WHOLE 138 KV STATION
FILE: d03-1ph_50n604-2013WP-NS-import-200.out
CHNL# 217: [L6513NMW]
CHNL# 215: [L6503MW1]
CHNL# 197: [L8003MW1]
CHNL# 195: [L8004MW1]
CHNL# 193: [L8001MW1]
CHNL# 221: [L3001MW1]
250.00
500.00
1000.0
0.0
-250.0
-1000.
0.0
1.0000
2.0000
3.0000
4.0000
5.0000
6.0000
7.0000
8.0000
9.0000
10.000
TIME (SECONDS)
TUE, JAN 27 2009 15:54
LINE FLOW MW

2013 WINTER PEAK STORA 167, NS LOAD 2371
NS-NB=-200; NB-NE=300; CBX=543; ONI=773 ONS=863
1 PHASE FAULT ON TRENTON BUS-TIE BREAKER 50N604
5 CYCLES, NO RECLOSING, CLEARS WHOLE 138 KV STATION
FILE: d03-1ph_50n604-2013WP-NS-import-200.out
CHNL# 154: [IR141-DIGBYH69.0 VOLTS]
CHNL# 153: [IR137-STATIG25.0 VOLTS]
CHNL# 152: [IR114-GLENDH138.0 VOLTS]
CHNL# 151: [IR84-DALHOHV230.0 VOLTS]
CHNL# 150: [IR82_NUTBHV69.0 VOLTS]
CHNL# 149: [IR45_AMHERTP138.0 VOLTS]
1.2000
0.70000
0.0
1.0000
2.0000
3.0000
4.0000
5.0000
6.0000
7.0000
8.0000
9.0000
10.000
TIME (SECONDS)
TUE, JAN 27 2009 15:54
WIND BUS VOLTS

2013 WINTER PEAK STORA 167, NS LOAD 2371
NS-NB=-200; NB-NE=300; CBX=543; ONI=773 ONS=863
SLG FAULT ON LINGAN BREAKER 88S7211
TRIPS LINGAN 3 AND 4 IN 4 CYCLES
FILE: d04-88s721_1ph-2013WP-NS-import-200.out
CHNL#S 20.4: [ANGL199169 [TUFTCV3 14.400] [3]] [ANGL156661 [DARL G1 22.000] [1
CHNL#S 17.4: [ANGL199086 [TRENTON613.800] [6]] [ANGL156661 [DARL G1 22.000] [1
CHNL#S 16.4: [ANGL199085 [TRENTN5 13.800] [5]] [ANGL156661 [DARL G1 22.000] [1
CHNL#S 15.4: [ANGL199061 [TMP1 STO13.800] [1]] [ANGL156661 [DARL G1 22.000] [1
CHNL#S 13.4: [ANGL199043 [ACONIG1 20.000] [1]] [ANGL156661 [DARL G1 22.000] [1
CHNL#S 11.4: [ANGL199001 [LINGAN1 14.400] [1]] [ANGL156661 [DARL G1 22.000] [1
TIME (SECONDS)
TUE, JAN 27 2009 15:54
NS ANGLE

2013 WINTER PEAK STORA 167, NS LOAD 2371
NS-NB=-200; NB-NE=300; CBX=543; ONI=773 ONS=863
SLG FAULT ON LINGAN BREAKER 88S7211
TRIPS LINGAN 3 AND 4 IN 4 CYCLES
FILE: d04-88s721_1ph-2013WP-NS-import-200.out
CHNL#S 10.4: [ANGL190472 [BLLDNG2 19.000] [1]] [ANGL156661 [DARL G1 22.000] [1
CHNL#S 6.4: [ANGL190456 [LEPRG1 26.000] [1]] [ANGL156661 [DARL G1 22.000] [1
CHNL#S 5.4: [ANGL190450 [MACTG1 13.800] [1]] [ANGL156661 [DARL G1 22.000] [1
CHNL#S 3.4: [ANGL126652 [RAV 3 22.000] [1]] [ANGL156661 [DARL G1 22.000] [1
CHNL#S 2.4: [ANGL101063 [MYST G7 22.000] [1]] [ANGL156661 [DARL G1 22.000] [1
CHNL#S 1.4: [ANGL100060 [MIS GT1 18.000] [1]] [ANGL156661 [DARL G1 22.000] [1
TIME (SECONDS)
TUE, JAN 27 2009 15:54
"NE,NY,NB ANGLE"

2013 WINTER PEAK STORA 167, NS LOAD 2371
NS-NB=-200; NB-NE=300; CBX=543; ONI=773 ONS=863
SLG FAULT ON LINGAN BREAKER 88S7211
TRIPS LINGAN 3 AND 4 IN 4 CYCLES
FILE: d04-88s721_1ph-2013WP-NS-import-200.out
CHNL# 59: [POWER199169 [TUFTCV3 14.400] [3]]
CHNL# 56: [POWER199086 [TRENTON613.800] [6]]
CHNL# 55: [POWER199085 [TRENTN5 13.800] [5]]
CHNL# 54: [POWER199061 [TMP1 STO13.800] [1]]
CHNL# 52: [POWER199043 [ACONIG1 20.000] [1]]
CHNL# 50: [POWER199001 [LINGAN1 14.400] [1]]
TIME (SECONDS)
TUE, JAN 27 2009 15:54
NS MW

2013 WINTER PEAK STORA 167, NS LOAD 2371
NS-NB=-200; NB-NE=300; CBX=543; ONI=773 ONS=863
SLG FAULT ON LINGAN BREAKER 88S7211
TRIPS LINGAN 3 AND 4 IN 4 CYCLES
FILE: d04-88s721_1ph-2013WP-NS-import-200.out
CHNL# 49: [POWER190472 [BLLDNG2 19.000] [1]]
CHNL# 45: [POWER190456 [LEPRG1 26.000] [1]]
CHNL# 44: [POWER190450 [MACTG1 13.800] [1]]
CHNL# 42: [POWER126652 [RAV 3 22.000] [1]]
CHNL# 41: [POWER101063 [MYST G7 22.000] [1]]
CHNL# 40: [POWER100060 [MIS GT1 18.000] [1]]
TIME (SECONDS)
TUE, JAN 27 2009 15:54
"NE,NY,NB POWER"

2013 WINTER PEAK STORA 167, NS LOAD 2371
NS-NB=-200; NB-NE=300; CBX=543; ONI=773 ONS=863
SLG FAULT ON LINGAN BREAKER 88S7211
TRIPS LINGAN 3 AND 4 IN 4 CYCLES
FILE: d04-88s721_1ph-2013WP-NS-import-200.out
CHNL# 119: [VARS IR141-DIGBY]
CHNL# 118: [VARS IR137-STATIA]
CHNL# 117: [VARS IR114-GLENDHU]
CHNL# 116: [VARS IR84-DALHOUSIE]
CHNL# 115: [VARS IR82_NUTTBY]
CHNL# 114: [VARS IR45_AMHERST]
TIME (SECONDS)
TUE, JAN 27 2009 15:54
NS WIND MV

2013 WINTER PEAK STORA 167, NS LOAD 2371
NS-NB=-200; NB-NE=300; CBX=543; ONI=773 ONS=863
SLG FAULT ON LINGAN BREAKER 88S7211
TRIPS LINGAN 3 AND 4 IN 4 CYCLES
FILE: d04-88s721_1ph-2013WP-NS-import-200.out
CHNL# 79: POWER IR141-DIGBY]
CHNL# 78: [POWER IR137-STATIA]
CHNL# 77: [POWER IR114-GLENDHU]
CHNL# 76: [POWER IR84-DALHOUSIE]
CHNL# 75: [POWER IR82_NUTTBY]
CHNL# 74: [POWER IR45_AMHERST]
TIME (SECONDS)
TUE, JAN 27 2009 15:54
NS WIND MW

2013 WINTER PEAK STORA 167, NS LOAD 2371
NS-NB=-200; NB-NE=300; CBX=543; ONI=773 ONS=863
SLG FAULT ON LINGAN BREAKER 88S7211
TRIPS LINGAN 3 AND 4 IN 4 CYCLES
FILE: d04-88s721_1ph-2013WP-NS-import-200.out
CHNL# 133: [VOLT199125 IONSLOW 345.00]
CHNL# 132: [VOLT199120 [HOPEWELL 345.00]
CHNL# 131: [VOLT199045 [WOODBINE345.00]
CHNL# 130: [VOLT190320 [SALBRY 345.00]
CHNL# 128: [VOLT190004 [KESWICK 345.00]
CHNL# 127: [VOLT 70002 [ORRINGTN345.00]
TIME (SECONDS)
TUE, JAN 27 2009 15:54
"345KV VOLTAGE"

2013 WINTER PEAK STORA 167, NS LOAD 2371
NS-NB=-200; NB-NE=300; CBX=543; ONI=773 ONS=863
SLG FAULT ON LINGAN BREAKER 88S7211
TRIPS LINGAN 3 AND 4 IN 4 CYCLES
FILE: d04-88s721_1ph-2013WP-NS-import-200.out
CHNL# 125: 60*(1+[FREQ199125 [ONSLOW 345.00])
CHNL# 124: 60*(1+[FREQ199120 [HOPEWELL 345.00])
CHNL# 123: 60*(1+[FREQ199045 [WOODBINE345.00])
CHNL# 122: 60*(1+[FREQ190320 [SALBRY 345.00])
CHNL# 121: 60*(1+[FREQ190197 [C.COVE 345.00])
CHNL# 120: 60*(1+[FREQ 70002 [ORRINGTN345.00])
TIME (SECONDS)
TUE, JAN 27 2009 15:54
FREQUENCY HZ

2013 WINTER PEAK STORA 167, NS LOAD 2371
NS-NB=-200; NB-NE=300; CBX=543; ONI=773 ONS=863
SLG FAULT ON LINGAN BREAKER 88S7211
TRIPS LINGAN 3 AND 4 IN 4 CYCLES
FILE: d04-88s721_1ph-2013WP-NS-import-200.out
CHNL# 146: [VOLT199280 [TUSKET A138.00]]
CHNL# 145: [VOLT199193 [HHWAS 138.00]]
CHNL# 144: [VOLT199165 [TUFTCOVE138.00]]
CHNL# 143: [VOLT199135 [SPRNGHILL138.00]]
CHNL# 142: [VOLT199090 [50N-TREN138.00]]
CHNL# 141: [VOLT199051 [HASTINGS138.00]]
1.2000
0.70000
0.0
1.0000
2.0000
3.0000
4.0000
5.0000
6.0000
7.0000
8.0000
9.0000
10.000
TIME (SECONDS)
TUE, JAN 27 2009 15:54
138KV BUS VOLTS

2013 WINTER PEAK STORA 167, NS LOAD 2371
NS-NB=-200; NB-NE=300; CBX=543; ONI=773 ONS=863
SLG FAULT ON LINGAN BREAKER 88S7211
TRIPS LINGAN 3 AND 4 IN 4 CYCLES
FILE: d04-88s721_1ph-2013WP-NS-import-200.out
CHNL# 140: [VOLT199240 [BWATER A230.00]]
CHNL# 139: [VOLT199200 [BRUSHY 230.00]]
CHNL# 138: [VOLT199130 [ONSLOW 230.00]]
CHNL# 137: [VOLT199050 [HASTINGS230.00]]
CHNL# 136: [VOLT199044 [PT.ACONI230.00]]
CHNL# 135: [VOLT199000 [LINGAN 230.00]]
1.2000
0.70000
0.0
1.0000
2.0000
3.0000
4.0000
5.0000
6.0000
7.0000
8.0000
9.0000
10.000
TIME (SECONDS)
TUE, JAN 27 2009 15:54
230KV BUS VOLTS

2013 WINTER PEAK STORA 167, NS LOAD 2371
NS-NB=-200; NB-NE=300; CBX=543; ONI=773 ONS=863
SLG FAULT ON LINGAN BREAKER 88S7211
TRIPS LINGAN 3 AND 4 IN 4 CYCLES
FILE: d04-88s721_1ph-2013WP-NS-import-200.out
CHNL# 217: [L6513NMW]
CHNL# 215: [L6503MW]
CHNL# 197: [L8003MW]
CHNL# 195: [L8004MW]
CHNL# 193: [L8001MW]
CHNL# 221: [L3001MW]
250.00
500.00
1000.0
0.0
-250.0
-1000.
0.0
1.0000
2.0000
3.0000
4.0000
5.0000
6.0000
7.0000
8.0000
9.0000
10.000
TIME (SECONDS)
TUE, JAN 27 2009 15:54
LINE FLOW MW

2013 WINTER PEAK STORA 167, NS LOAD 2371
NS-NB=-200; NB-NE=300; CBX=543; ONI=773 ONS=863
SLG FAULT ON LINGAN BREAKER 88S7211
TRIPS LINGAN 3 AND 4 IN 4 CYCLES
FILE: d04-88s721_1ph-2013WP-NS-import-200.out
CHNL# 154: [IR141-DIGBYH69.0 VOLTS]
CHNL# 153: [IR137-STATIG25.0 VOLTS]
CHNL# 152: [IR114-GLENDH138.0 VOLTS]
CHNL# 151: [IR84-DALHOHV230.0 VOLTS]
CHNL# 150: [IR82-NUTBHV69.0 VOLTS]
CHNL# 149: [IR45-AMHERTP138.0 VOLTS]
1.2000
0.70000
0.0
1.0000
2.0000
3.0000
4.0000
5.0000
6.0000
7.0000
8.0000
9.0000
10.000
TIME (SECONDS)
TUE, JAN 27 2009 15:54
WIND BUS VOLTS

2013 WINTER PEAK STORA 167, NS LOAD 2371
NS-NB=-200; NB-NE=300; CBX=543; ONI=773 ONS=863
SLG FAULT ON ONSLOW BREAKER 1N600
CLEARS ONSLOW 138KV AND RADIAL LINES
FILE: d05-1n600_1ph-2013WP-NS-import-200.out
CHNL#S 20.4: [ANGL199169 [TUFTCV3 14.400] [3]] [ANGL156661 [DARL G1 22.000] [1
CHNL#S 17.4: [ANGL199086 [TRENTON613.800] [6]] [ANGL156661 [DARL G1 22.000] [1
CHNL#S 16.4: [ANGL199085 [TRENTN5 13.800] [5]] [ANGL156661 [DARL G1 22.000] [1
CHNL#S 15.4: [ANGL199061 [TMP1 STO13.800] [1]] [ANGL156661 [DARL G1 22.000] [1
CHNL#S 13.4: [ANGL199043 [ACONIG1 20.000] [1]] [ANGL156661 [DARL G1 22.000] [1
CHNL#S 11.4: [ANGL199001 [LINGAN1 14.400] [1]] [ANGL156661 [DARL G1 22.000] [1
TIME (SECONDS)
TUE, JAN 27 2009 15:54
NS ANGLE

2013 WINTER PEAK STORA 167, NS LOAD 2371
NS-NB=-200; NB-NE=300; CBX=543; ONI=773 ONS=863
SLG FAULT ON ONSLOW BREAKER 1N600
CLEARS ONSLOW 138KV AND RADIAL LINES
FILE: d05-1n600_1ph-2013WP-NS-import-200.out
CHNL#S 10.4: [ANGL190472 [BLLDNG2 19.000] [1]] [ANGL156661 [DARL G1 22.000] [1
CHNL#S 6.4: [ANGL190456 [LEPRG1 26.000] [1]] [ANGL156661 [DARL G1 22.000] [1
CHNL#S 5.4: [ANGL190450 [MACTG1 13.800] [1]] [ANGL156661 [DARL G1 22.000] [1
CHNL#S 3.4: [ANGL126652 [RAV 3 22.000] [1]] [ANGL156661 [DARL G1 22.000] [1
CHNL#S 2.4: [ANGL101063 [MYST G7 22.000] [1]] [ANGL156661 [DARL G1 22.000] [1
CHNL#S 1.4: [ANGL100060 [MIS GT1 18.000] [1]] [ANGL156661 [DARL G1 22.000] [1
TIME (SECONDS)
TUE, JAN 27 2009 15:54
"NE,NY,NB ANGLE"

2013 WINTER PEAK STORA 167, NS LOAD 2371
NS-NB=-200; NB-NE=300; CBX=543; ONI=773 ONS=863
SLG FAULT ON ONSLOW BREAKER 1N600
CLEARS ONSLOW 138KV AND RADIAL LINES
FILE: d05-1n600_1ph-2013WP-NS-import-200.out
CHNL# 59: [POWER199169 [TUFTCV3 14.400] [3]]
CHNL# 56: [POWER199086 [TRENTON613.800] [6]]
CHNL# 55: [POWER199085 [TRENTN5 13.800] [5]]
CHNL# 54: [POWER199061 [TMP1 STO13.800] [1]]
CHNL# 52: [POWER199043 [ACONIG1 20.000] [1]]
CHNL# 50: [POWER199001 [LINGAN1 14.400] [1]]
TIME (SECONDS)
TUE, JAN 27 2009 15:54
NS MW

2013 WINTER PEAK STORA 167, NS LOAD 2371
NS-NB=-200; NB-NE=300; CBX=543; ONI=773 ONS=863
SLG FAULT ON ONSLOW BREAKER 1N600
CLEARS ONSLOW 138KV AND RADIAL LINES
FILE: d05-1n600_1ph-2013WP-NS-import-200.out
CHNL# 49: [POWER190472 [BLLDNG2 19.000] [1]]
CHNL# 45: [POWER190456 [LEPRG1 26.000] [1]]
CHNL# 44: [POWER190450 [MACTG1 13.800] [1]]
CHNL# 42: [POWER126652 [RAV 3 22.000] [1]]
CHNL# 41: [POWER101063 [MYST G7 22.000] [1]]
CHNL# 40: [POWER100060 [MIS GT1 18.000] [1]]
TIME (SECONDS)
TUE, JAN 27 2009 15:54
"NE,NY,NB POWER"

2013 WINTER PEAK STORA 167, NS LOAD 2371
NS-NB=-200; NB-NE=300; CBX=543; ONI=773 ONS=863
SLG FAULT ON ONSLOW BREAKER 1N600
CLEARS ONSLOW 138KV AND RADIAL LINES
FILE: d05-1n600_1ph-2013WP-NS-import-200.out
CHNL# 119: [VARS IR141-DIGBY]
CHNL# 118: [VARS IR137-STATIA]
CHNL# 117: [VARS IR114-GLENDHU]
CHNL# 116: [VARS IR84-DALHOUSIE]
CHNL# 115: [VARS IR82_NUTTBY]
CHNL# 114: [VARS IR45_AMHERST]
0.50000
-0.5000
0.0
1.0000
2.0000
3.0000
4.0000
5.0000
6.0000
7.0000
8.0000
9.0000
10.000
TIME (SECONDS)
TUE, JAN 27 2009 15:54
NS WIND MV

2013 WINTER PEAK STORA 167, NS LOAD 2371
NS-NB=-200; NB-NE=300; CBX=543; ONI=773 ONS=863
SLG FAULT ON ONSLOW BREAKER 1N600
CLEARS ONSLOW 138KV AND RADIAL LINES
FILE: d05-1n600_1ph-2013WP-NS-import-200.out
CHNL# 79: [POWER IR141-DIGBY]
CHNL# 78: [POWER IR137-STATIA]
CHNL# 77: [POWER IR114-GLENDHU]
CHNL# 76: [POWER IR84-DALHOUSIE]
CHNL# 75: [POWER IR82_NUTTBY]
CHNL# 74: [POWER IR45_AMHERST]
1.0000
0.0
1.0000
2.0000
3.0000
4.0000
5.0000
6.0000
7.0000
8.0000
9.0000
10.000
TIME (SECONDS)
TUE, JAN 27 2009 15:54
NS WIND MW

2013 WINTER PEAK STORA 167, NS LOAD 2371
NS-NB=-200; NB-NE=300; CBX=543; ONI=773 ONS=863
SLG FAULT ON ONSLOW BREAKER 1N600
CLEARS ONSLOW 138KV AND RADIAL LINES
FILE: d05-1n600_1ph-2013WP-NS-import-200.out
CHNL# 133: [VOLT199125 IONSLOW 345.00]
CHNL# 132: [VOLT199120 IHOPEWELL 345.00]
CHNL# 131: [VOLT199045 IWOODBINE345.00]
CHNL# 130: [VOLT190320 ISALBRY 345.00]
CHNL# 128: [VOLT190004 IKESWICK 345.00]
CHNL# 127: [VOLT 70002 IORRINGTN345.00]
1.1000
0.90000
0.0
1.0000
2.0000
3.0000
4.0000
5.0000
6.0000
7.0000
8.0000
9.0000
10.000
TIME (SECONDS)
TUE, JAN 27 2009 15:54
"345KV VOLTAGE"

2013 WINTER PEAK STORA 167, NS LOAD 2371
NS-NB=-200; NB-NE=300; CBX=543; ONI=773 ONS=863
SLG FAULT ON ONSLOW BREAKER 1N600
CLEARS ONSLOW 138KV AND RADIAL LINES
FILE: d05-1n600_1ph-2013WP-NS-import-200.out
CHNL# 125: 60*(1+[FREQ199125 IONSLOW 345.00])
CHNL# 124: 60*(1+[FREQ199120 IHOPEWELL 345.00])
CHNL# 123: 60*(1+[FREQ199045 IWOODBINE345.00])
CHNL# 122: 60*(1+[FREQ190320 ISALBRY 345.00])
CHNL# 121: 60*(1+[FREQ190197 IC.COVE 345.00])
CHNL# 120: 60*(1+[FREQ 70002 IORRINGTN345.00])
60.500
59.500
0.0
1.0000
2.0000
3.0000
4.0000
5.0000
6.0000
7.0000
8.0000
9.0000
10.000
TIME (SECONDS)
TUE, JAN 27 2009 15:54
FREQUENCY HZ

2013 WINTER PEAK STORA 167, NS LOAD 2371
NS-NB=-200; NB-NE=300; CBX=543; ONI=773 ONS=863
SLG FAULT ON ONSLOW BREAKER 1N600
CLEARS ONSLOW 138KV AND RADIAL LINES
FILE: d05-1n600_1ph-2013WP-NS-import-200.out
CHNL# 146: [VOLT199280 [TUSKET A138.00]] 1.2000 0.70000
CHNL# 145: [VOLT199193 [HHWAS 138.00]] 1.2000 0.70000
CHNL# 144: [VOLT199165 [TUFTCOVE138.00]] 1.2000 0.70000
CHNL# 143: [VOLT199138 [SPRNGHILL138.00]] 1.2000 0.70000
CHNL# 142: [VOLT199090 [SON-TREN138.00]] 1.2000 0.70000
CHNL# 141: [VOLT199051 [HASTINGS138.00]] 1.2000 0.70000
0.0 1.0000 2.0000 3.0000 4.0000 5.0000 6.0000 7.0000 8.0000 9.0000 10.000
TIME (SECONDS)
TUE, JAN 27 2009 15:54
138KV BUS VOLTS

2013 WINTER PEAK STORA 167, NS LOAD 2371
NS-NB=-200; NB-NE=300; CBX=543; ONI=773 ONS=863
SLG FAULT ON ONSLOW BREAKER 1N600
CLEARS ONSLOW 138KV AND RADIAL LINES
FILE: d05-1n600_1ph-2013WP-NS-import-200.out
CHNL# 140: [VOLT199240 [BWATER A230.00]] 1.2000 0.70000
CHNL# 139: [VOLT199200 [BRUSHY 230.00]] 1.2000 0.70000
CHNL# 138: [VOLT199130 [ONSLOW 230.00]] 1.2000 0.70000
CHNL# 137: [VOLT199050 [HASTINGS230.00]] 1.2000 0.70000
CHNL# 136: [VOLT199044 [PT.ACONI230.00]] 1.2000 0.70000
CHNL# 135: [VOLT199000 [LINGAN 230.00]] 1.2000 0.70000
0.0 1.0000 2.0000 3.0000 4.0000 5.0000 6.0000 7.0000 8.0000 9.0000 10.000
TIME (SECONDS)
TUE, JAN 27 2009 15:54
230KV BUS VOLTS

2013 WINTER PEAK STORA 167, NS LOAD 2371
NS-NB=-200; NB-NE=300; CBX=543; ONI=773 ONS=863
SLG FAULT ON ONSLOW BREAKER 1N600
CLEARS ONSLOW 138KV AND RADIAL LINES
FILE: d05-1n600_1ph-2013WP-NS-import-200.out
CHNL# 217: [L6533NWM] 250.00 -250.0
CHNL# 215: [L6503MVI] 500.00 0.0
CHNL# 197: [L8003MVI] 1000.0 0.0
CHNL# 195: [L8004MVI] 500.00 0.0
CHNL# 193: [L8001MVI] 1000.0 -1000.
CHNL# 221: [L3001MVI] 1000.0 -1000.
0.0 1.0000 2.0000 3.0000 4.0000 5.0000 6.0000 7.0000 8.0000 9.0000 10.000
TIME (SECONDS)
TUE, JAN 27 2009 15:54
LINE FLOW MW

2013 WINTER PEAK STORA 167, NS LOAD 2371
NS-NB=-200; NB-NE=300; CBX=543; ONI=773 ONS=863
SLG FAULT ON ONSLOW BREAKER 1N600
CLEARS ONSLOW 138KV AND RADIAL LINES
FILE: d05-1n600_1ph-2013WP-NS-import-200.out
CHNL# 154: [IR141-DIGBYH69.0 VOLTS] 1.2000 0.70000
CHNL# 153: [IR137-STATIG25.0 VOLTS] 1.2000 0.70000
CHNL# 152: [IR114-GLENDH138.0 VOLTS] 1.2000 0.70000
CHNL# 151: [IR84-DALHOHV230.0 VOLTS] 1.2000 0.70000
CHNL# 150: [IR82-NUTBHV69.0 VOLTS] 1.2000 0.70000
CHNL# 149: [IR45-AMHERTP138.0 VOLTS] 1.2000 0.70000
0.0 1.0000 2.0000 3.0000 4.0000 5.0000 6.0000 7.0000 8.0000 9.0000 10.000
TIME (SECONDS)
TUE, JAN 27 2009 15:54
WIND BUS VOLTS

2013 WINTER PEAK STORA 167, NS LOAD 2371
NS-NB=-200; NB-NE=300; CBX=543; ONI=773 ONS=863
LOSE TUFTS COVE 3
NO FAULT
FILE: e02-lose-tc3-2013WP-NS-import-200.out
CHNL#S 20.4: [ANGL199169 [TUFTCV3 14.400] [3]] [ANGL156661 [DARL G1 22.000] [1
CHNL#S 17.4: [ANGL199086 [TRENTON613.800] [6]] [ANGL156661 [DARL G1 22.000] [1
CHNL#S 16.4: [ANGL199085 [TRENTN5 13.800] [5]] [ANGL156661 [DARL G1 22.000] [1
CHNL#S 15.4: [ANGL199061 [TMP1 STO13.800] [1]] [ANGL156661 [DARL G1 22.000] [1
CHNL#S 13.4: [ANGL199043 [ACONIG1 20.000] [1]] [ANGL156661 [DARL G1 22.000] [1
CHNL#S 11.4: [ANGL199001 [LINGAN1 14.400] [1]] [ANGL156661 [DARL G1 22.000] [1
TIME (SECONDS)
TUE, JAN 27 2009 15:54
NS ANGLE

2013 WINTER PEAK STORA 167, NS LOAD 2371
NS-NB=-200; NB-NE=300; CBX=543; ONI=773 ONS=863
LOSE TUFTS COVE 3
NO FAULT
FILE: e02-lose-tc3-2013WP-NS-import-200.out
CHNL#S 10.4: [ANGL190472 [BLLDNG2 19.000] [1]] [ANGL156661 [DARL G1 22.000] [1
CHNL#S 6.4: [ANGL190456 [LEPRG1 26.000] [1]] [ANGL156661 [DARL G1 22.000] [1
CHNL#S 5.4: [ANGL190450 [MACTG1 13.800] [1]] [ANGL156661 [DARL G1 22.000] [1
CHNL#S 3.4: [ANGL126652 [RAV 3 22.000] [1]] [ANGL156661 [DARL G1 22.000] [1
CHNL#S 2.4: [ANGL101063 [MYST G7 22.000] [1]] [ANGL156661 [DARL G1 22.000] [1
CHNL#S 1.4: [ANGL100060 [MIS GT1 18.000] [1]] [ANGL156661 [DARL G1 22.000] [1
TIME (SECONDS)
TUE, JAN 27 2009 15:54
"NE,NY,NB ANGLE"

2013 WINTER PEAK STORA 167, NS LOAD 2371
NS-NB=-200; NB-NE=300; CBX=543; ONI=773 ONS=863
LOSE TUFTS COVE 3
NO FAULT
FILE: e02-lose-tc3-2013WP-NS-import-200.out
CHNL# 59: [POWR199169 [TUFTCV3 14.400] [3]]
CHNL# 56: [POWR199086 [TRENTON613.800] [6]]
CHNL# 55: [POWR199085 [TRENTN5 13.800] [5]]
CHNL# 54: [POWR199061 [TMP1 STO13.800] [1]]
CHNL# 52: [POWR199043 [ACONIG1 20.000] [1]]
CHNL# 50: [POWR199001 [LINGAN1 14.400] [1]]
TIME (SECONDS)
TUE, JAN 27 2009 15:54
NS MW

2013 WINTER PEAK STORA 167, NS LOAD 2371
NS-NB=-200; NB-NE=300; CBX=543; ONI=773 ONS=863
LOSE TUFTS COVE 3
NO FAULT
FILE: e02-lose-tc3-2013WP-NS-import-200.out
CHNL# 49: [POWER190472 [BLLDNG2 19.000] [1]]
CHNL# 45: [POWER190456 [LEPRG1 26.000] [1]]
CHNL# 44: [POWER190450 [MACTG1 13.800] [1]]
CHNL# 42: [POWER126652 [RAV 3 22.000] [1]]
CHNL# 41: [POWER101063 [MYST G7 22.000] [1]]
CHNL# 40: [POWER100060 [MIS GT1 18.000] [1]]
TIME (SECONDS)
TUE, JAN 27 2009 15:54
"NE,NY,NB POWER"

2013 WINTER PEAK STORA 167, NS LOAD 2371
NS-NB=-200; NB-NE=300; CBX=543; ONI=773 ONS=863
LOSE TUFTS COVE 3
NO FAULT
FILE: e02-lose-tc3-2013WP-NS-import-200.out
CHNL# 119: [VARS IR141-DIGBY]
CHNL# 118: [VARS IR137-STATIA]
CHNL# 117: [VARS IR114-GLENDHU]
CHNL# 116: [VARS IR84-DALHOUSIE]
CHNL# 115: [VARS IR82_NUTTBY]
CHNL# 114: [VARS IR45_AMHERST]
0.50000
-0.5000
0.0
1.0000
2.0000
3.0000
4.0000
5.0000
6.0000
7.0000
8.0000
9.0000
10.000
TIME (SECONDS)
TUE, JAN 27 2009 15:54
NS WIND MV

2013 WINTER PEAK STORA 167, NS LOAD 2371
NS-NB=-200; NB-NE=300; CBX=543; ONI=773 ONS=863
LOSE TUFTS COVE 3
NO FAULT
FILE: e02-lose-tc3-2013WP-NS-import-200.out
CHNL# 79: [POWER IR141-DIGBY]
CHNL# 78: [POWER IR137-STATIA]
CHNL# 77: [POWER IR114-GLENDHU]
CHNL# 76: [POWER IR84-DALHOUSIE]
CHNL# 75: [POWER IR82_NUTTBY]
CHNL# 74: [POWER IR45_AMHERST]
1.0000
0.0
1.0000
2.0000
3.0000
4.0000
5.0000
6.0000
7.0000
8.0000
9.0000
10.000
TIME (SECONDS)
TUE, JAN 27 2009 15:54
NS WIND MW

2013 WINTER PEAK STORA 167, NS LOAD 2371
NS-NB=-200; NB-NE=300; CBX=543; ONI=773 ONS=863
LOSE TUFTS COVE 3
NO FAULT
FILE: e02-lose-tc3-2013WP-NS-import-200.out
CHNL# 133: [VOLT199125 [ONSLOW 345.00]]
CHNL# 132: [VOLT199120 [HOPEWELL 345.00]]
CHNL# 131: [VOLT199045 [WOODBINE345.00]]
CHNL# 130: [VOLT190320 [SALBRY 345.00]]
CHNL# 128: [VOLT190004 [KESWICK 345.00]]
CHNL# 127: [VOLT 70002 [ORRINGTN345.00]]
1.1000
0.90000
0.0
1.0000
2.0000
3.0000
4.0000
5.0000
6.0000
7.0000
8.0000
9.0000
10.000
TIME (SECONDS)
TUE, JAN 27 2009 15:54
"345KV VOLTAGE"

2013 WINTER PEAK STORA 167, NS LOAD 2371
NS-NB=-200; NB-NE=300; CBX=543; ONI=773 ONS=863
LOSE TUFTS COVE 3
NO FAULT
FILE: e02-lose-tc3-2013WP-NS-import-200.out
CHNL# 125: 60*(1+[FREQ199125 [ONSLOW 345.00]])
CHNL# 124: 60*(1+[FREQ199120 [HOPEWELL 345.00]])
CHNL# 123: 60*(1+[FREQ199045 [WOODBINE345.00]])
CHNL# 122: 60*(1+[FREQ190320 [SALBRY 345.00]])
CHNL# 121: 60*(1+[FREQ190197 [C.COVE 345.00]])
CHNL# 120: 60*(1+[FREQ 70002 [ORRINGTN345.00]])
60.500
59.500
0.0
1.0000
2.0000
3.0000
4.0000
5.0000
6.0000
7.0000
8.0000
9.0000
10.000
TIME (SECONDS)
TUE, JAN 27 2009 15:54
FREQUENCY HZ

2013 WINTER PEAK STORA 167, NS LOAD 2371
NS-NB=-200; NB-NE=300; CBX=543; ONI=773 ONS=863
LOSE TUFTS COVE 3
NO FAULT
FILE: e02-lose-tc3-2013WP-NS-import-200.out
CHNL# 146: [VOLT199280 TUSKET A138.00]
CHNL# 145: [VOLT199193 [H-WAS 138.00]
CHNL# 144: [VOLT199165 TUFTCOVE138.00]
CHNL# 143: [VOLT199138 SPRNGHLL138.00]
CHNL# 142: [VOLT199090 [SON-TREN138.00]
CHNL# 141: [VOLT199051 [HASTINGS138.00]
TIME (SECONDS)
TUE, JAN 27 2009 15:54
138KV BUS VOLTS

2013 WINTER PEAK STORA 167, NS LOAD 2371
NS-NB=-200; NB-NE=300; CBX=543; ONI=773 ONS=863
LOSE TUFTS COVE 3
NO FAULT
FILE: e02-lose-tc3-2013WP-NS-import-200.out
CHNL# 140: [VOLT199240 [BWATER A230.00]
CHNL# 139: [VOLT199200 [BRUSHY 230.00]
CHNL# 138: [VOLT199130 [ONSLOW 230.00]]
CHNL# 137: [VOLT199050 [HASTINGS230.00]]
CHNL# 136: [VOLT199044 [PT.ACONI230.00]]
CHNL# 135: [VOLT199000 [LINGAN 230.00]]
TIME (SECONDS)
TUE, JAN 27 2009 15:54
230KV BUS VOLTS

2013 WINTER PEAK STORA 167, NS LOAD 2371
NS-NB=-200; NB-NE=300; CBX=543; ONI=773 ONS=863
LOSE TUFTS COVE 3
NO FAULT
FILE: e02-lose-tc3-2013WP-NS-import-200.out
CHNL# 217: [L6533NWV]
CHNL# 215: [L6503MVI]
CHNL# 197: [L8003MVI]
CHNL# 195: [L8004MVI]
CHNL# 193: [L8001MVI]
CHNL# 221: [L3001MVI]
TIME (SECONDS)
TUE, JAN 27 2009 15:54
LINE FLOW MW

2013 WINTER PEAK STORA 167, NS LOAD 2371
NS-NB=-200; NB-NE=300; CBX=543; ONI=773 ONS=863
LOSE TUFTS COVE 3
NO FAULT
FILE: e02-lose-tc3-2013WP-NS-import-200.out
CHNL# 154: [IR141-DIGBYH69.0 VOLTS]
CHNL# 153: [IR137-STATIG25.0 VOLTS]
CHNL# 152: [IR114-GLENDH138.0 VOLTS]
CHNL# 151: [IR84-DALHOHV230.0 VOLTS]
CHNL# 150: [IR82 NUTBHV69.0 VOLTS]
CHNL# 149: [IR45 AMHERTP138.0 VOLTS]
TIME (SECONDS)
TUE, JAN 27 2009 15:54
WIND BUS VOLTS

2013 WINTER PEAK STORA 167, NS LOAD 2371
NS-NB=-200; NB-NE=300; CBX=543; ONI=773 ONS=863
LOSE ALL LOAD AT STRA
NO FAULT
FILE: e03-lose-stora-2013WP-NS-import-200.out
CHNL#S 20.4: [ANGL199169 [TUFTCV3 14.400] [3]] [ANGL156661 [DARL G1 22.000] [1
CHNL#S 17.4: [ANGL199086 [TRENTON6 13.800] [6]] [ANGL156661 [DARL G1 22.000] [1
CHNL#S 16.4: [ANGL199085 [TRENTN5 13.800] [5]] [ANGL156661 [DARL G1 22.000] [1
CHNL#S 15.4: [ANGL199061 [TMP1 STO 13.800] [1]] [ANGL156661 [DARL G1 22.000] [1
CHNL#S 13.4: [ANGL199043 [ACONIG1 20.000] [1]] [ANGL156661 [DARL G1 22.000] [1
CHNL#S 11.4: [ANGL199001 [LINGAN1 14.400] [1]] [ANGL156661 [DARL G1 22.000] [1
TIME (SECONDS)
TUE, JAN 27 2009 15:54
NS ANGLE

2013 WINTER PEAK STORA 167, NS LOAD 2371
NS-NB=-200; NB-NE=300; CBX=543; ONI=773 ONS=863
LOSE ALL LOAD AT STRA
NO FAULT
FILE: e03-lose-stora-2013WP-NS-import-200.out
CHNL#S 10.4: [ANGL190472 [BLLDNG2 19.000] [1]] [ANGL156661 [DARL G1 22.000] [1
CHNL#S 6.4: [ANGL190456 [LEPRG1 26.000] [1]] [ANGL156661 [DARL G1 22.000] [1
CHNL#S 5.4: [ANGL190450 [MACTG1 13.800] [1]] [ANGL156661 [DARL G1 22.000] [1
CHNL#S 3.4: [ANGL126652 [RAV 3 22.000] [1]] [ANGL156661 [DARL G1 22.000] [1
CHNL#S 2.4: [ANGL101063 [MYST G7 22.000] [1]] [ANGL156661 [DARL G1 22.000] [1
CHNL#S 1.4: [ANGL100060 [MIS GT1 18.000] [1]] [ANGL156661 [DARL G1 22.000] [1
TIME (SECONDS)
TUE, JAN 27 2009 15:54
"NE,NY,NB ANGLE"

2013 WINTER PEAK STORA 167, NS LOAD 2371
NS-NB=-200; NB-NE=300; CBX=543; ONI=773 ONS=863
LOSE ALL LOAD AT STRA
NO FAULT
FILE: e03-lose-stora-2013WP-NS-import-200.out
CHNL# 59: [POWR199169 [TUFTCV3 14.400] [3]]
CHNL# 56: [POWR199086 [TRENTON6 13.800] [6]]
CHNL# 55: [POWR199085 [TRENTN5 13.800] [5]]
CHNL# 54: [POWR199061 [TMP1 STO 13.800] [1]]
CHNL# 52: [POWR199043 [ACONIG1 20.000] [1]]
CHNL# 50: [POWR199001 [LINGAN1 14.400] [1]]
TIME (SECONDS)
TUE, JAN 27 2009 15:54
NS MW

2013 WINTER PEAK STORA 167, NS LOAD 2371
NS-NB=-200; NB-NE=300; CBX=543; ONI=773 ONS=863
LOSE ALL LOAD AT STRA
NO FAULT
FILE: e03-lose-stora-2013WP-NS-import-200.out
CHNL# 49: [POWER190472 [BLLDNG2 19.000] [1]]
CHNL# 45: [POWER190456 [LEPRG1 26.000] [1]]
CHNL# 44: [POWER190450 [MACTG1 13.800] [1]]
CHNL# 42: [POWER126652 [RAV 3 22.000] [1]]
CHNL# 41: [POWER101063 [MYST G7 22.000] [1]]
CHNL# 40: [POWER100060 [MIS GT1 18.000] [1]]
TIME (SECONDS)
TUE, JAN 27 2009 15:54
"NE,NY,NB POWER"

2013 WINTER PEAK STORA 167, NS LOAD 2371
NS-NB=-200; NB-NE=300; CBX=543; ONI=773 ONS=863
LOSE ALL LOAD AT STRA
NO FAULT
FILE: e03-lose-stora-2013WP-NS-import-200.out
CHNL# 119: [VARS IR141-DIGBY]
CHNL# 118: [VARS IR137-STATIA]
CHNL# 117: [VARS IR114-GLENDHU]
CHNL# 116: [VARS IR84-DALHOUSIE]
CHNL# 115: [VARS IR82_NUTTBY]
CHNL# 114: [VARS IR45_AMHERST]
0.50000
-0.5000
0.0
1.0000
2.0000
3.0000
4.0000
5.0000
6.0000
7.0000
8.0000
9.0000
10.000
TIME (SECONDS)
TUE, JAN 27 2009 15:54
NS WIND MV

2013 WINTER PEAK STORA 167, NS LOAD 2371
NS-NB=-200; NB-NE=300; CBX=543; ONI=773 ONS=863
LOSE ALL LOAD AT STRA
NO FAULT
FILE: e03-lose-stora-2013WP-NS-import-200.out
CHNL# 79: [POWER IR141-DIGBY]
CHNL# 78: [POWER IR137-STATIA]
CHNL# 77: [POWER IR114-GLENDHU]
CHNL# 76: [POWER IR84-DALHOUSIE]
CHNL# 75: [POWER IR82_NUTTBY]
CHNL# 74: [POWER IR45_AMHERST]
1.0000
0.0
1.0000
2.0000
3.0000
4.0000
5.0000
6.0000
7.0000
8.0000
9.0000
10.000
TIME (SECONDS)
TUE, JAN 27 2009 15:54
NS WIND MW

2013 WINTER PEAK STORA 167, NS LOAD 2371
NS-NB=-200; NB-NE=300; CBX=543; ONI=773 ONS=863
LOSE ALL LOAD AT STRA
NO FAULT
FILE: e03-lose-stora-2013WP-NS-import-200.out
CHNL# 133: [VOLT199125 [ONSLOW 345.00]]
CHNL# 132: [VOLT199120 [HOPEWELL 345.00]]
CHNL# 131: [VOLT199045 [WOODBINE345.00]]
CHNL# 130: [VOLT190320 [SALBRY 345.00]]
CHNL# 128: [VOLT190004 [KESWICK 345.00]]
CHNL# 127: [VOLT 70002 [ORRINGTN345.00]]
1.1000
0.90000
0.0
1.0000
2.0000
3.0000
4.0000
5.0000
6.0000
7.0000
8.0000
9.0000
10.000
TIME (SECONDS)
TUE, JAN 27 2009 15:54
"345KV VOLTAGE"

2013 WINTER PEAK STORA 167, NS LOAD 2371
NS-NB=-200; NB-NE=300; CBX=543; ONI=773 ONS=863
LOSE ALL LOAD AT STRA
NO FAULT
FILE: e03-lose-stora-2013WP-NS-import-200.out
CHNL# 125: 60*(1+[FREQ199125 [ONSLOW 345.00]])
CHNL# 124: 60*(1+[FREQ199120 [HOPEWELL 345.00]])
CHNL# 123: 60*(1+[FREQ199045 [WOODBINE345.00]])
CHNL# 122: 60*(1+[FREQ190320 [SALBRY 345.00]])
CHNL# 121: 60*(1+[FREQ190197 [C.COVE 345.00]])
CHNL# 120: 60*(1+[FREQ 70002 [ORRINGTN345.00]])
60.500
59.500
0.0
1.0000
2.0000
3.0000
4.0000
5.0000
6.0000
7.0000
8.0000
9.0000
10.000
TIME (SECONDS)
TUE, JAN 27 2009 15:54
FREQUENCY HZ

2013 WINTER PEAK STORA 167, NS LOAD 2371
NS-NB=-200; NB-NE=300; CBX=543; ONI=773 ONS=863
LOSE ALL LOAD AT STRA
NO FAULT
FILE: e03-lose-stora-2013WP-NS-import-200.out
CHNL# 146: [VOLT199280 [TUSKET A138.00]]
CHNL# 145: [VOLT199193 [HHWAS 138.00]]
CHNL# 144: [VOLT199165 [TUFTCOVE138.00]]
CHNL# 143: [VOLT199138 [SPRNGHIL138.00]]
CHNL# 142: [VOLT199090 [50N-TREN138.00]]
CHNL# 141: [VOLT199051 [HASTINGS138.00]]
1.2000
0.70000
0.0
1.0000
2.0000
3.0000
4.0000
5.0000
6.0000
7.0000
8.0000
9.0000
10.000
TIME (SECONDS)
TUE, JAN 27 2009 15:54
138KV BUS VOLTS

2013 WINTER PEAK STORA 167, NS LOAD 2371
NS-NB=-200; NB-NE=300; CBX=543; ONI=773 ONS=863
LOSE ALL LOAD AT STRA
NO FAULT
FILE: e03-lose-stora-2013WP-NS-import-200.out
CHNL# 140: [VOLT199240 [BWATER A230.00]]
CHNL# 139: [VOLT199200 [BRUSHY 230.00]]
CHNL# 138: [VOLT199130 [ONSLOW 230.00]]
CHNL# 137: [VOLT199050 [HASTINGS230.00]]
CHNL# 136: [VOLT199044 [PT.ACONI230.00]]
CHNL# 135: [VOLT199000 [LINGAN 230.00]]
1.2000
0.70000
0.0
1.0000
2.0000
3.0000
4.0000
5.0000
6.0000
7.0000
8.0000
9.0000
10.000
TIME (SECONDS)
TUE, JAN 27 2009 15:54
230KV BUS VOLTS

2013 WINTER PEAK STORA 167, NS LOAD 2371
NS-NB=-200; NB-NE=300; CBX=543; ONI=773 ONS=863
LOSE ALL LOAD AT STRA
NO FAULT
FILE: e03-lose-stora-2013WP-NS-import-200.out
CHNL# 217: [L6533NWV]
CHNL# 215: [L6503MWV]
CHNL# 197: [L8003MWV]
CHNL# 195: [L8004MWV]
CHNL# 193: [L8001MWV]
CHNL# 221: [L3001MWV]
250.00
500.00
1000.0
0.0
-250.0
-1000.
TIME (SECONDS)
TUE, JAN 27 2009 15:54
LINE FLOW MW

2013 WINTER PEAK STORA 167, NS LOAD 2371
NS-NB=-200; NB-NE=300; CBX=543; ONI=773 ONS=863
LOSE ALL LOAD AT STRA
NO FAULT
FILE: e03-lose-stora-2013WP-NS-import-200.out
CHNL# 154: [IR141-DIGBYH69.0 VOLTS]
CHNL# 153: [IR137-STATIG25.0 VOLTS]
CHNL# 152: [IR114-GLENDH138.0 VOLTS]
CHNL# 151: [IR84-DALHOHV230.0 VOLTS]
CHNL# 150: [IR82 NUTBHV69.0 VOLTS]
CHNL# 149: [IR45 AMHERTP138.0 VOLTS]
1.2000
0.70000
0.0
1.0000
2.0000
3.0000
4.0000
5.0000
6.0000
7.0000
8.0000
9.0000
10.000
TIME (SECONDS)
TUE, JAN 27 2009 15:54
WIND BUS VOLTS

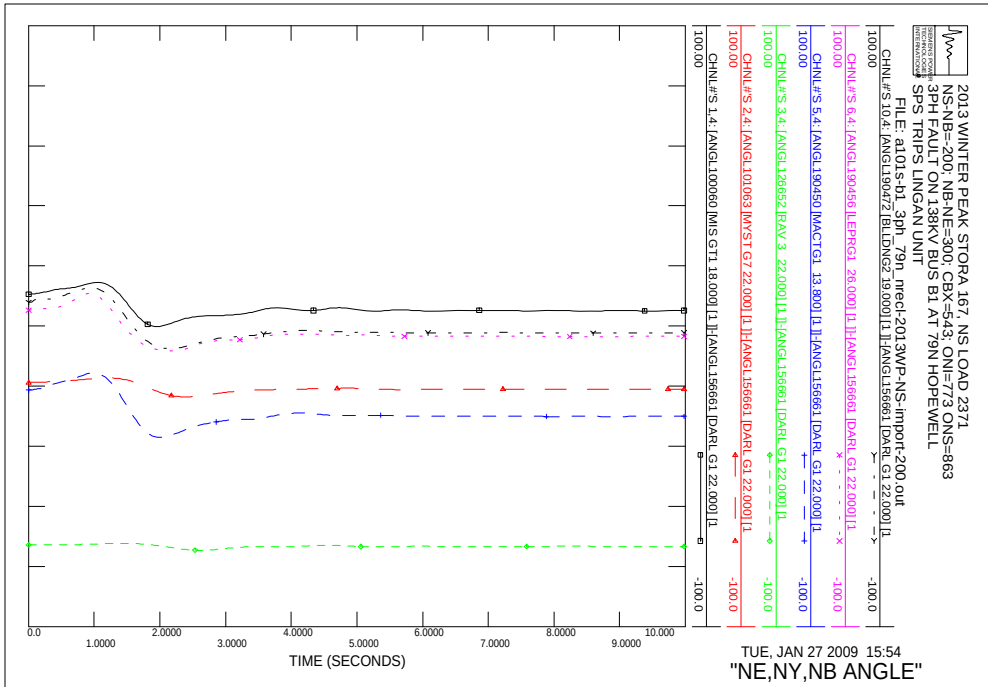
2013 WINTER PEAK STORA 167, NS LOAD 2371
NS-NB=-200; NB-NE=300; CBX=543; ONI=773 ONS=863
3PH FAULT ON 138KV BUS B1 AT 79N HOPEWELL
SPS TRIPS LINGAN UNIT
FILE: a101s-b1_3ph_79n_nrecl-2013WP-NS-import-200.out
CHNL#'S 10,4: [ANGL190472 [BLLDNG2 19.000] [1]]-[ANGL156661 [DARL G1 22.000] [1
CHNL#'S 6,4: [ANGL190456 [LEPRG1 26.000] [1]]-[ANGL156661 [DARL G1 22.000] [1
CHNL#'S 5,4: [ANGL190450 [MACTG1 13.800] [1]]-[ANGL156661 [DARL G1 22.000] [1
CHNL#'S 3,4: [ANGL126652 [RAV 3 22.000] [1]]-[ANGL156661 [DARL G1 22.000] [1
CHNL#'S 2,4: [ANGL101063 [MYST G7 22.000] [1]]-[ANGL156661 [DARL G1 22.000] [1
CHNL#'S 1,4: [ANGL100060 [MIS GT1 18.000] [1]]-[ANGL156661 [DARL G1 22.000] [1
TIME (SECONDS)
TUE, JAN 27 2009 15:54
"NE,NY,NB ANGLE"

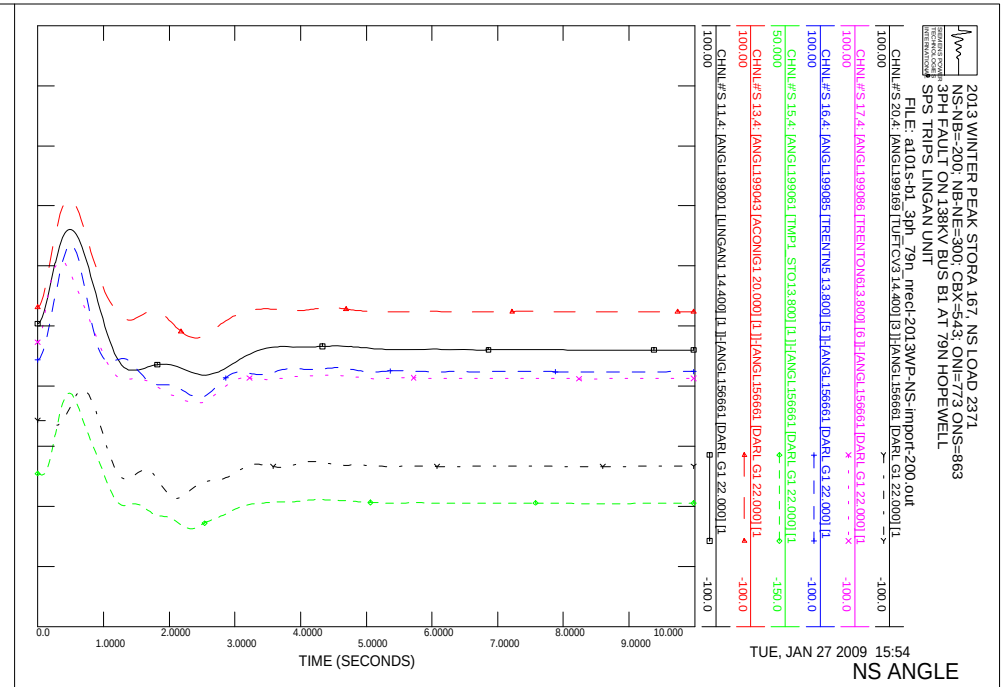
2013 WINTER PEAK STORA 167, NS LOAD 2371
NS-NB=-200; NB-NE=300; CBX=543; ONI=773 ONS=863
3PH FAULT ON 138KV BUS B1 AT 79N HOPEWELL
SPS TRIPS LINGAN UNIT
FILE: a101s-b1_3ph_79n_nrecl-2013WP-NS-import-200.out
CHNL#'S 20,4: [ANGL199169 [TUFTCV3 14.400] [3]]-[ANGL156661 [DARL G1 22.000] [1
CHNL#'S 17,4: [ANGL199086 [TRENTON613.800] [6]]-[ANGL156661 [DARL G1 22.000] [1
CHNL#'S 16,4: [ANGL199085 [TRENTN5 13.800] [5]]-[ANGL156661 [DARL G1 22.000] [1
CHNL#'S 15,4: [ANGL199061 [TMP1 STO13.800] [1]]-[ANGL156661 [DARL G1 22.000] [1
CHNL#'S 13,4: [ANGL199043 [ACONIG1 20.000] [1]]-[ANGL156661 [DARL G1 22.000] [1
CHNL#'S 11,4: [ANGL199001 [LINGAN1 14.400] [1]]-[ANGL156661 [DARL G1 22.000] [1
TIME (SECONDS)
TUE, JAN 27 2009 15:54
NS ANGLE

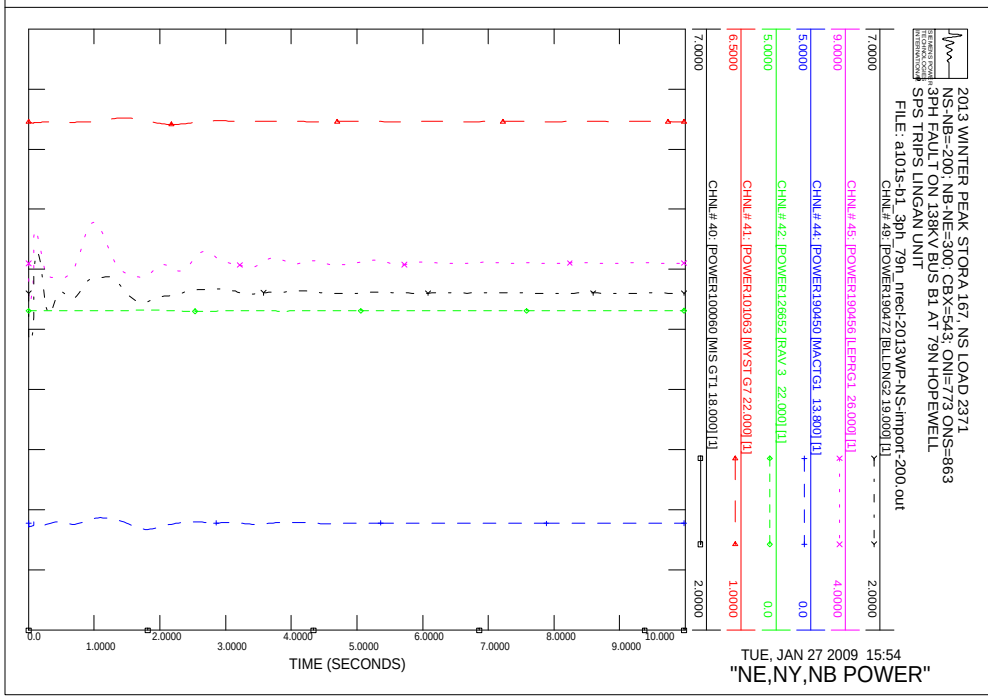
2013 WINTER PEAK STORA 167, NS LOAD 2371
NS-NB=-200; NB-NE=300; CBX=543; ONI=773 ONS=863
3PH FAULT ON 138KV BUS B1 AT 79N HOPEWELL
SPS TRIPS LINGAN UNIT
FILE: a101s-b1_3ph_79n_nrecl-2013WP-NS-import-200.out
CHNL# 49: [POWER190472 [BLLDNG2 19.000] [1]
CHNL# 45: [POWER190456 [LEPRG1 26.000] [1]
CHNL# 44: [POWER190450 [MACTG1 13.800] [1]
CHNL# 42: [POWER126652 [RAV 3 22.000] [1]
CHNL# 41: [POWER101063 [MYST G7 22.000] [1]
CHNL# 40: [POWER100060 [MIS GT1 18.000] [1]
TIME (SECONDS)
TUE, JAN 27 2009 15:54
"NE,NY,NB POWER"

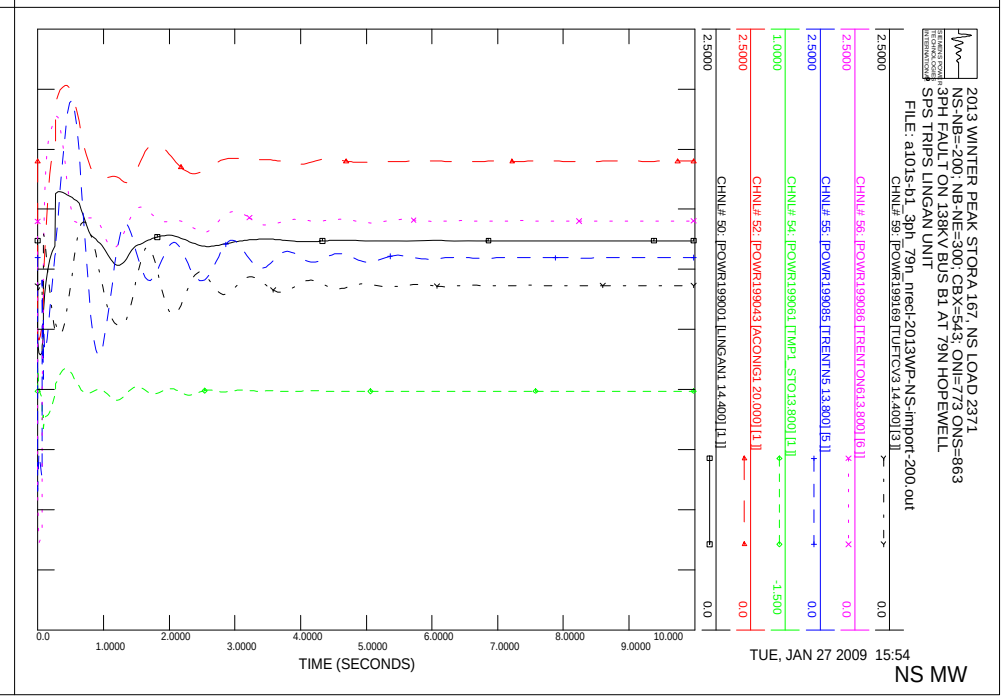
2013 WINTER PEAK STORA 167, NS LOAD 2371
NS-NB=-200; NB-NE=300; CBX=543; ONI=773 ONS=863
3PH FAULT ON 138KV BUS B1 AT 79N HOPEWELL
SPS TRIPS LINGAN UNIT
FILE: a101s-b1_3ph_79n_nrecl-2013WP-NS-import-200.out
CHNL# 59: [POWR199169 [TUFTCV3 14.400] [3]]
CHNL# 56: [POWR199086 [TRENTON613.800] [6]]
CHNL# 55: [POWR199085 [TRENTN5 13.800] [5]]
CHNL# 54: [POWR199061 [TMP1 STO13.800] [1]]
CHNL# 52: [POWR199043 [ACONIG1 20.000] [1]]
CHNL# 50: [POWR199001 [LINGAN1 14.400] [1]]
TIME (SECONDS)
TUE, JAN 27 2009 15:54
NS MW

2013 WINTER PEAK STORA 167, NS LOAD 2371
NS-NB=-200; NB-NE=300; CBX=543; ONI=773 ONS=863
3PH FAULT ON 138KV BUS B1 AT 79N HOPEWELL
SPS TRIPS LINGAN UNIT
FILE: a101s-b1_3ph_79n_mrecl-2013WP-NS-import-200.out
CHNL# 114: [VARS IR45_AMHERST]
CHNL# 115: [VARS IR82_NUTTBY]
CHNL# 116: [VARS IR84-DALHOUSIE]
CHNL# 117: [VARS IR114-GLENDHU]
CHNL# 118: [VARS IR137-STATIA]
CHNL# 119: [VARS IR141-DIGBY]
0.50000
-0.5000
0.0
1.0000
2.0000
3.0000
4.0000
5.0000
6.0000
7.0000
8.0000
9.0000
10.000
TIME (SECONDS)
TUE, JAN 27 2009 15:54
NS WIND MV

2013 WINTER PEAK STORA 167, NS LOAD 2371
NS-NB=-200; NB-NE=300; CBX=543; ONI=773 ONS=863
3PH FAULT ON 138KV BUS B1 AT 79N HOPEWELL
SPS TRIPS LINGAN UNIT
FILE: a101s-b1_3ph_79n_mrecl-2013WP-NS-import-200.out
CHNL# 74: [POWER IR45_AMHERST]
CHNL# 75: [POWER IR82_NUTTBY]
CHNL# 76: [POWER IR84-DALHOUSIE]
CHNL# 77: [POWER IR114-GLENDHU]
CHNL# 78: [POWER IR137-STATIA]
CHNL# 79: [POWER IR141-DIGBY]
1.0000
0.0
0.0
1.0000
2.0000
3.0000
4.0000
5.0000
6.0000
7.0000
8.0000
9.0000
10.000
TIME (SECONDS)
TUE, JAN 27 2009 15:54
NS WIND MW

2013 WINTER PEAK STORA 167, NS LOAD 2371
NS-NB=-200; NB-NE=300; CBX=543; ONI=773 ONS=863
3PH FAULT ON 138KV BUS B1 AT 79N HOPEWELL
SPS TRIPS LINGAN UNIT
FILE: a101s-b1_3ph_79n_mrecl-2013WP-NS-import-200.out
CHNL# 127: [VOLT 70002 [ORRINGTN345.00]]
CHNL# 128: [VOLT190004 [KESWICK 345.00]]
CHNL# 130: [VOLT190320 [SALBRY 345.00]]
CHNL# 131: [VOLT199045 [WOODBINE345.00]]
CHNL# 132: [VOLT199120 [HOPEWELL345.00]]
1.1000
0.90000
0.0
1.0000
2.0000
3.0000
4.0000
5.0000
6.0000
7.0000
8.0000
9.0000
10.000
TIME (SECONDS)
TUE, JAN 27 2009 15:54
"345KV VOLTAGE"

2013 WINTER PEAK STORA 167, NS LOAD 2371
NS-NB=-200; NB-NE=300; CBX=543; ONI=773 ONS=863
3PH FAULT ON 138KV BUS B1 AT 79N HOPEWELL
SPS TRIPS LINGAN UNIT
FILE: a101s-b1_3ph_79n_mrecl-2013WP-NS-import-200.out
CHNL# 120: 60*(1+[FREQ 70002 [ORRINGTN345.00]])
CHNL# 121: 60*(1+[FREQ190197 [C.COVE 345.00]])
CHNL# 122: 60*(1+[FREQ190320 [SALBRY 345.00]])
CHNL# 123: 60*(1+[FREQ199045 [WOODBINE345.00]])
CHNL# 124: 60*(1+[FREQ199120 [HOPEWELL345.00]])
CHNL# 125: 60*(1+[FREQ199125 [ONSLOW 345.00]])
60.500
59.500
0.0
1.0000
2.0000
3.0000
4.0000
5.0000
6.0000
7.0000
8.0000
9.0000
10.000
TIME (SECONDS)
TUE, JAN 27 2009 15:54
FREQUENCY HZ

2013 WINTER PEAK STORA 167, NS LOAD 2371
NS-NB=-200; NB-NE=300; CBX=543; ONI=773 ONS=863
3PH FAULT ON 138KV BUS B1 AT 79N HOPEWELL
SPS TRIPS LINGAN UNIT
FILE: a101s-b1_3ph_79n_mrecl-2013WP-NS-import-200.out
CHNL# 146: [VOLT199280 [TUSKET A138.00]]
CHNL# 145: [VOLT199193 [HHWAS 138.00]]
CHNL# 144: [VOLT199165 [TUFTCOVE138.00]]
CHNL# 143: [VOLT199138 [SPRNGHILL138.00]]
CHNL# 142: [VOLT199090 [50N-TREN138.00]]
CHNL# 141: [VOLT199051 [HASTINGS138.00]]
1.2000
0.70000
0.0
1.0000
2.0000
3.0000
4.0000
5.0000
6.0000
7.0000
8.0000
9.0000
10.000
TIME (SECONDS)
TUE, JAN 27 2009 15:54
138KV BUS VOLTS

2013 WINTER PEAK STORA 167, NS LOAD 2371
NS-NB=-200; NB-NE=300; CBX=543; ONI=773 ONS=863
3PH FAULT ON 138KV BUS B1 AT 79N HOPEWELL
SPS TRIPS LINGAN UNIT
FILE: a101s-b1_3ph_79n_mrecl-2013WP-NS-import-200.out
CHNL# 140: [VOLT199240 [BWATER A230.00]]
CHNL# 139: [VOLT199200 [BRUSHY 230.00]]
CHNL# 138: [VOLT199130 [ONSLOW 230.00]]
CHNL# 137: [VOLT199050 [HASTINGS230.00]]
CHNL# 136: [VOLT199044 [PT.ACONI230.00]]
CHNL# 135: [VOLT199000 [LINGAN 230.00]]
1.2000
0.70000
0.0
1.0000
2.0000
3.0000
4.0000
5.0000
6.0000
7.0000
8.0000
9.0000
10.000
TIME (SECONDS)
TUE, JAN 27 2009 15:54
230KV BUS VOLTS

2013 WINTER PEAK STORA 167, NS LOAD 2371
NS-NB=-200; NB-NE=300; CBX=543; ONI=773 ONS=863
3PH FAULT ON 138KV BUS B1 AT 79N HOPEWELL
SPS TRIPS LINGAN UNIT
FILE: a101s-b1_3ph_79n_mrecl-2013WP-NS-import-200.out
CHNL# 217: [L6533MW]
CHNL# 215: [L6503MW]
CHNL# 197: [L8003MW]
CHNL# 195: [L8004MW]
CHNL# 193: [L8001MW]
CHNL# 221: [L3001MW]
250.00
500.00
1000.0
0.0
-250.0
-1000.
TIME (SECONDS)
TUE, JAN 27 2009 15:54
LINE FLOW MW

2013 WINTER PEAK STORA 167, NS LOAD 2371
NS-NB=-200; NB-NE=300; CBX=543; ONI=773 ONS=863
3PH FAULT ON 138KV BUS B1 AT 79N HOPEWELL
SPS TRIPS LINGAN UNIT
FILE: a101s-b1_3ph_79n_mrecl-2013WP-NS-import-200.out
CHNL# 154: [IR141-DIGBYH69.0 VOLTS]
CHNL# 153: [IR137-STATIG25.0 VOLTS]
CHNL# 152: [IR114-GLENDH138.0 VOLTS]
CHNL# 151: [IR84-DALHOHV230.0 VOLTS]
CHNL# 150: [IR82_NUTBHV69.0 VOLTS]
CHNL# 149: [IR45_AMHERTP138.0 VOLTS]
1.2000
0.70000
0.0
1.0000
2.0000
3.0000
4.0000
5.0000
6.0000
7.0000
8.0000
9.0000
10.000
TIME (SECONDS)
TUE, JAN 27 2009 15:54
WIND BUS VOLTS

2013 WINTER PEAK STORA 167, NS LOAD 2371
NS-NB=-200; NB-NE=300; CBX=543; ONI=773 ONS=863
3 PHASE FAULT ON ONSLOW 138KV BUS B61
TRIPS T72, L6001, T4, CAPACITOR BANK
FILE: a102-b61_3ph_1n_nrect-2013WP-NS-import-200.out
CHNL# 20: [ANGL199169 [TUFTCV3 14.400[3]] [ANGL156661 [DARL G1 22.000[1]
CHNL# 17: [ANGL199086 [TRENTON613.800[6]] [ANGL156661 [DARL G1 22.000[1]
CHNL# 16: [ANGL199085 [TRENTN5 13.800[5]] [ANGL156661 [DARL G1 22.000[1]
CHNL# 15: [ANGL199061 [TMP1 STO13.800[1]] [ANGL156661 [DARL G1 22.000[1]
CHNL# 13: [ANGL199043 [ACONIG1 20.000[1]] [ANGL156661 [DARL G1 22.000[1]
CHNL# 11: [ANGL199001 [LINGAN1 14.400[1]] [ANGL156661 [DARL G1 22.000[1]
TIME (SECONDS)
TUE, JAN 27 2009 15:54
NS ANGLE

2013 WINTER PEAK STORA 167, NS LOAD 2371
NS-NB=-200; NB-NE=300; CBX=543; ONI=773 ONS=863
3 PHASE FAULT ON ONSLOW 138KV BUS B61
TRIPS T72, L6001, T4, CAPACITOR BANK
FILE: a102-b61_3ph_1n_nrect-2013WP-NS-import-200.out
CHNL# 10: [ANGL190472 [BLLDNG2 19.000[1]] [ANGL156661 [DARL G1 22.000[1]
CHNL# 6: [ANGL190456 [LEPRG1 26.000[1]] [ANGL156661 [DARL G1 22.000[1]
CHNL# 5: [ANGL190450 [MACTG1 13.800[1]] [ANGL156661 [DARL G1 22.000[1]
CHNL# 3: [ANGL126652 [RAV 3 22.000[1]] [ANGL156661 [DARL G1 22.000[1]
CHNL# 2: [ANGL101063 [MYST G7 22.000[1]] [ANGL156661 [DARL G1 22.000[1]
CHNL# 1: [ANGL100060 [MIS GT1 18.000[1]] [ANGL156661 [DARL G1 22.000[1]
TIME (SECONDS)
TUE, JAN 27 2009 15:54
"NE,NY,NB ANGLE"

2013 WINTER PEAK STORA 167, NS LOAD 2371
NS-NB=-200; NB-NE=300; CBX=543; ONI=773 ONS=863
3 PHASE FAULT ON ONSLOW 138KV BUS B61
TRIPS T72, L6001, T4, CAPACITOR BANK
FILE: a102-b61_3ph_1n_nrect-2013WP-NS-import-200.out
CHNL# 59: [POWR199169 [TUFTCV3 14.400[3]]
CHNL# 56: [POWR199086 [TRENTON613.800[6]]
CHNL# 55: [POWR199085 [TRENTN5 13.800[5]]
CHNL# 54: [POWR199061 [TMP1 STO13.800[1]]
CHNL# 52: [POWR199043 [ACONIG1 20.000[1]]
CHNL# 50: [POWR199001 [LINGAN1 14.400[1]]
TIME (SECONDS)
TUE, JAN 27 2009 15:54
NS MW

2013 WINTER PEAK STORA 167, NS LOAD 2371
NS-NB=-200; NB-NE=300; CBX=543; ONI=773 ONS=863
3 PHASE FAULT ON ONSLOW 138KV BUS B61
TRIPS T72, L6001, T4, CAPACITOR BANK
FILE: a102-b61_3ph_1n_nrect-2013WP-NS-import-200.out
CHNL# 49: [POWER190472 [BLLDNG2 19.000[1]]
CHNL# 45: [POWER190456 [LEPRG1 26.000[1]]
CHNL# 44: [POWER190450 [MACTG1 13.800[1]]
CHNL# 42: [POWER126652 [RAV 3 22.000[1]]
CHNL# 41: [POWER101063 [MYST G7 22.000[1]]
CHNL# 40: [POWER100060 [MIS GT1 18.000[1]]
TIME (SECONDS)
TUE, JAN 27 2009 15:54
"NE,NY,NB POWER"

2013 WINTER PEAK STORA 167, NS LOAD 2371
NS-NB=-200; NB-NE=300; CBX=543; ONI=773 ONS=863
3 PHASE FAULT ON ONSLOW 138KV BUS B61
TRIPS T72, L6001, T4, CAPACITOR BANK
FILE: a102-b61_3ph_1n_mrect-2013WP-NS-import-200.out
CHNL# 119: [VARS IR141-DIGBY]
CHNL# 118: [VARS IR137-STATIA]
CHNL# 117: [VARS IR114-GLENDHU]
CHNL# 116: [VARS IR84-DALHOUSIE]
CHNL# 115: [VARS IR82_NUTTBY]
CHNL# 114: [VARS IR45_AMHERST]
TIME (SECONDS)
TUE, JAN 27 2009 15:54
NS WIND MV

2013 WINTER PEAK STORA 167, NS LOAD 2371
NS-NB=-200; NB-NE=300; CBX=543; ONI=773 ONS=863
3 PHASE FAULT ON ONSLOW 138KV BUS B61
TRIPS T72, L6001, T4, CAPACITOR BANK
FILE: a102-b61_3ph_1n_mrect-2013WP-NS-import-200.out
CHNL# 79: [POWER IR141-DIGBY]
CHNL# 78: [POWER IR137-STATIA]
CHNL# 77: [POWER IR114-GLENDHU]
CHNL# 76: [POWER IR84-DALHOUSIE]
CHNL# 75: [POWER IR82_NUTTBY]
CHNL# 74: [POWER IR45_AMHERST]
TIME (SECONDS)
TUE, JAN 27 2009 15:54
NS WIND MW

2013 WINTER PEAK STORA 167, NS LOAD 2371
NS-NB=-200; NB-NE=300; CBX=543; ONI=773 ONS=863
3 PHASE FAULT ON ONSLOW 138KV BUS B61
TRIPS T72, L6001, T4, CAPACITOR BANK
FILE: a102-b61_3ph_1n_mrect-2013WP-NS-import-200.out
CHNL# 133: [VOLT199125 [ONSLOW 345.00]]
CHNL# 132: [VOLT199120 [HOPEWELL 345.00]]
CHNL# 131: [VOLT199045 [WOODBINE345.00]]
CHNL# 130: [VOLT190320 [SALBRY 345.00]]
CHNL# 128: [VOLT190004 [KESWICK 345.00]]
CHNL# 127: [VOLT 70002 [ORRINGTN345.00]]
TIME (SECONDS)
TUE, JAN 27 2009 15:54
"345KV VOLTAGE"

2013 WINTER PEAK STORA 167, NS LOAD 2371
NS-NB=-200; NB-NE=300; CBX=543; ONI=773 ONS=863
3 PHASE FAULT ON ONSLOW 138KV BUS B61
TRIPS T72, L6001, T4, CAPACITOR BANK
FILE: a102-b61_3ph_1n_mrect-2013WP-NS-import-200.out
CHNL# 125: 60*(1+[FREQ199125 [ONSLOW 345.00]])
CHNL# 124: 60*(1+[FREQ199120 [HOPEWELL 345.00]])
CHNL# 123: 60*(1+[FREQ199045 [WOODBINE345.00]])
CHNL# 122: 60*(1+[FREQ190320 [SALBRY 345.00]])
CHNL# 121: 60*(1+[FREQ190197 [C.COVE 345.00]])
CHNL# 120: 60*(1+[FREQ 70002 [ORRINGTN345.00]])
TIME (SECONDS)
TUE, JAN 27 2009 15:54
FREQUENCY HZ

2013 WINTER PEAK STORA 167, NS LOAD 2371
NS-NB=-200; NB-NE=300; CBX=543; ONI=773 ONS=863
3 PHASE FAULT ON ONSLOW 138KV BUS B61
TRIPS T72, L6001, T4, CAPACITOR BANK
FILE: a102-b61_3ph_1n_mect-2013WP-NS-import-200.out
CHNL# 146: [VOLT199280 TUSKET A138.00]
CHNL# 145: [VOLT199193 [HHWAS 138.00]
CHNL# 144: [VOLT199165 [TUFTCOVE138.00]
CHNL# 143: [VOLT199138 [SPRNGHILL138.00]
CHNL# 142: [VOLT199090 [SON-TREN138.00]
CHNL# 141: [VOLT199051 [HASTINGS138.00]
TIME (SECONDS)
TUE, JAN 27 2009 15:54
138KV BUS VOLTS

2013 WINTER PEAK STORA 167, NS LOAD 2371
NS-NB=-200; NB-NE=300; CBX=543; ONI=773 ONS=863
3 PHASE FAULT ON ONSLOW 138KV BUS B61
TRIPS T72, L6001, T4, CAPACITOR BANK
FILE: a102-b61_3ph_1n_mect-2013WP-NS-import-200.out
CHNL# 140: [VOLT199240 [BWATER A230.00]
CHNL# 139: [VOLT199200 [BRUSHY 230.00]
CHNL# 138: [VOLT199130 [ONSLOW 230.00]
CHNL# 137: [VOLT199050 [HASTINGS230.00]
CHNL# 136: [VOLT199044 [PT.ACONI230.00]
CHNL# 135: [VOLT199000 [LINGAN 230.00]
TIME (SECONDS)
TUE, JAN 27 2009 15:54
230KV BUS VOLTS

2013 WINTER PEAK STORA 167, NS LOAD 2371
NS-NB=-200; NB-NE=300; CBX=543; ONI=773 ONS=863
3 PHASE FAULT ON ONSLOW 138KV BUS B61
TRIPS T72, L6001, T4, CAPACITOR BANK
FILE: a102-b61_3ph_1n_mect-2013WP-NS-import-200.out
CHNL# 217: [L6533NMW]
CHNL# 215: [L6503MW]
CHNL# 197: [L8003MW]
CHNL# 195: [L8004MW]
CHNL# 193: [L8001MW]
CHNL# 221: [L3001MW]
TIME (SECONDS)
TUE, JAN 27 2009 15:54
LINE FLOW MW

2013 WINTER PEAK STORA 167, NS LOAD 2371
NS-NB=-200; NB-NE=300; CBX=543; ONI=773 ONS=863
3 PHASE FAULT ON ONSLOW 138KV BUS B61
TRIPS T72, L6001, T4, CAPACITOR BANK
FILE: a102-b61_3ph_1n_mect-2013WP-NS-import-200.out
CHNL# 154: [IR141-DIGBYH69.0 VOLTS]
CHNL# 153: [IR137-STATIG25.0 VOLTS]
CHNL# 152: [IR114-GLENDH138.0 VOLTS]
CHNL# 151: [IR84-DALHOHV230.0 VOLTS]
CHNL# 150: [IR82_NUTBHV69.0 VOLTS]
CHNL# 149: [IR45_AMHERTP138.0 VOLTS]
TIME (SECONDS)
TUE, JAN 27 2009 15:54
WIND BUS VOLTS

2013 WINTER PEAK STORA 167, NS LOAD 2371
NS-NB=-200; NB-NE=300; CBX=543; ONI=773 ONS=863
3 PHASE FAULT ON L6503 AT TRENTON
CLEARED IN 6 CYCLES - RECLOSE ATTEMPT FROM ONSLOW
FILE: a103-L6503_3ph_1n_recl-2013WP-NS-import-200.out
CHNL# 20: [ANGL199169 [TUFTCV3 14.400] [3]] [ANGL156661 [DARL G1 22.000] [1]
CHNL# 17: [ANGL199086 [TRENTON613.800] [6]] [ANGL156661 [DARL G1 22.000] [1]
CHNL# 16: [ANGL199085 [TRENTN5 13.800] [5]] [ANGL156661 [DARL G1 22.000] [1]
CHNL# 15: [ANGL199061 [TMP1 STO13.800] [1]] [ANGL156661 [DARL G1 22.000] [1]
CHNL# 13: [ANGL199043 [ACONIG1 20.000] [1]] [ANGL156661 [DARL G1 22.000] [1]
CHNL# 11: [ANGL199001 [LINGAN1 14.400] [1]] [ANGL156661 [DARL G1 22.000] [1]
100.00
-100.0
50.000
-150.0
0.0
1.0000
2.0000
3.0000
4.0000
5.0000
6.0000
7.0000
8.0000
9.0000
10.000
TIME (SECONDS)
TUE, JAN 27 2009 15:54
NS ANGLE

2013 WINTER PEAK STORA 167, NS LOAD 2371
NS-NB=-200; NB-NE=300; CBX=543; ONI=773 ONS=863
3 PHASE FAULT ON L6503 AT TRENTON
CLEARED IN 6 CYCLES - RECLOSE ATTEMPT FROM ONSLOW
FILE: a103-L6503_3ph_1n_recl-2013WP-NS-import-200.out
CHNL# 10: [ANGL190472 [BLLDNG2 19.000] [1]] [ANGL156661 [DARL G1 22.000] [1]
CHNL# 6: [ANGL190456 [LEPRG1 26.000] [1]] [ANGL156661 [DARL G1 22.000] [1]
CHNL# 5: [ANGL190450 [MACTG1 13.800] [1]] [ANGL156661 [DARL G1 22.000] [1]
CHNL# 3: [ANGL126652 [RAV 3 22.000] [1]] [ANGL156661 [DARL G1 22.000] [1]
CHNL# 2: [ANGL101063 [MYST G7 22.000] [1]] [ANGL156661 [DARL G1 22.000] [1]
CHNL# 1: [ANGL100060 [MIS GT1 18.000] [1]] [ANGL156661 [DARL G1 22.000] [1]
100.00
-100.0
0.0
1.0000
2.0000
3.0000
4.0000
5.0000
6.0000
7.0000
8.0000
9.0000
10.000
TIME (SECONDS)
TUE, JAN 27 2009 15:54
"NE,NY,NB ANGLE"

2013 WINTER PEAK STORA 167, NS LOAD 2371
NS-NB=-200; NB-NE=300; CBX=543; ONI=773 ONS=863
3 PHASE FAULT ON L6503 AT TRENTON
CLEARED IN 6 CYCLES - RECLOSE ATTEMPT FROM ONSLOW
FILE: a103-L6503_3ph_1n_recl-2013WP-NS-import-200.out
CHNL# 59: [POWR199169 [TUFTCV3 14.400] [3]]
CHNL# 56: [POWR199086 [TRENTON613.800] [6]]
CHNL# 55: [POWR199085 [TRENTN5 13.800] [5]]
CHNL# 54: [POWR199061 [TMP1 STO13.800] [1]]
CHNL# 52: [POWR199043 [ACONIG1 20.000] [1]]
CHNL# 50: [POWR199001 [LINGAN1 14.400] [1]]
2.5000
0.0
1.0000
-1.500
2.0000
3.0000
4.0000
5.0000
6.0000
7.0000
8.0000
9.0000
10.000
TIME (SECONDS)
TUE, JAN 27 2009 15:54
NS MW

2013 WINTER PEAK STORA 167, NS LOAD 2371
NS-NB=-200; NB-NE=300; CBX=543; ONI=773 ONS=863
3 PHASE FAULT ON L6503 AT TRENTON
CLEARED IN 6 CYCLES - RECLOSE ATTEMPT FROM ONSLOW
FILE: a103-L6503_3ph_1n_recl-2013WP-NS-import-200.out
CHNL# 49: [POWER190472 [BLLDNG2 19.000] [1]]
CHNL# 45: [POWER190456 [LEPRG1 26.000] [1]]
CHNL# 44: [POWER190450 [MACTG1 13.800] [1]]
CHNL# 42: [POWER126652 [RAV 3 22.000] [1]]
CHNL# 41: [POWER101063 [MYST G7 22.000] [1]]
CHNL# 40: [POWER100060 [MIS GT1 18.000] [1]]
7.0000
2.0000
9.0000
4.0000
5.0000
0.0
6.5000
1.0000
1.0000
2.0000
3.0000
4.0000
5.0000
6.0000
7.0000
8.0000
9.0000
10.000
TIME (SECONDS)
TUE, JAN 27 2009 15:54
"NE,NY,NB POWER"

2013 WINTER PEAK STORA 167, NS LOAD 2371
NS-NB=-200; NB-NE=300; CBX=543; ONI=773 ONS=863
3 PHASE FAULT ON L6503 AT TRENTON
CLEARED IN 6 CYCLES - RECLOSE ATTEMPT FROM ONSLOW
FILE: a103-L6503_3ph_1n_recl-2013WP-NS-import-200.out
CHNL# 119: [VARS IR141-DIGBY]
CHNL# 118: [VARS IR137-STATIA]
CHNL# 117: [VARS IR114-GLENDHU]
CHNL# 116: [VARS IR84-DALHOUSIE]
CHNL# 115: [VARS IR82_NUTTBY]
CHNL# 114: [VARS IR45_AMHERST]
TIME (SECONDS)
TUE, JAN 27 2009 15:54
NS WIND MV

2013 WINTER PEAK STORA 167, NS LOAD 2371
NS-NB=-200; NB-NE=300; CBX=543; ONI=773 ONS=863
3 PHASE FAULT ON L6503 AT TRENTON
CLEARED IN 6 CYCLES - RECLOSE ATTEMPT FROM ONSLOW
FILE: a103-L6503_3ph_1n_recl-2013WP-NS-import-200.out
CHNL# 79: [POWER IR141-DIGBY]
CHNL# 78: [POWER IR137-STATIA]
CHNL# 77: [POWER IR114-GLENDHU]
CHNL# 76: [POWER IR84-DALHOUSIE]
CHNL# 75: [POWER IR82_NUTTBY]
CHNL# 74: [POWER IR45_AMHERST]
TIME (SECONDS)
TUE, JAN 27 2009 15:54
NS WIND MW

2013 WINTER PEAK STORA 167, NS LOAD 2371
NS-NB=-200; NB-NE=300; CBX=543; ONI=773 ONS=863
3 PHASE FAULT ON L6503 AT TRENTON
CLEARED IN 6 CYCLES - RECLOSE ATTEMPT FROM ONSLOW
FILE: a103-L6503_3ph_1n_recl-2013WP-NS-import-200.out
CHNL# 133: [VOLT199125 [ONSLOW 345.00]]
CHNL# 132: [VOLT199120 [HOPEWELL 345.00]]
CHNL# 131: [VOLT199045 [WOODBINE345.00]]
CHNL# 130: [VOLT190320 [SALBRY 345.00]]
CHNL# 128: [VOLT190004 [KESWICK 345.00]]
CHNL# 127: [VOLT 70002 [ORRINGTN345.00]]
TIME (SECONDS)
TUE, JAN 27 2009 15:54
"345KV VOLTAGE"

2013 WINTER PEAK STORA 167, NS LOAD 2371
NS-NB=-200; NB-NE=300; CBX=543; ONI=773 ONS=863
3 PHASE FAULT ON L6503 AT TRENTON
CLEARED IN 6 CYCLES - RECLOSE ATTEMPT FROM ONSLOW
FILE: a103-L6503_3ph_1n_recl-2013WP-NS-import-200.out
CHNL# 125: 60*(1+[FREQ199125 [ONSLOW 345.00]])
CHNL# 124: 60*(1+[FREQ199120 [HOPEWELL 345.00]])
CHNL# 123: 60*(1+[FREQ199045 [WOODBINE345.00]])
CHNL# 122: 60*(1+[FREQ190320 [SALBRY 345.00]])
CHNL# 121: 60*(1+[FREQ190197 [C.COVE 345.00]])
CHNL# 120: 60*(1+[FREQ 70002 [ORRINGTN345.00]])
TIME (SECONDS)
TUE, JAN 27 2009 15:54
FREQUENCY HZ

2013 WINTER PEAK STORA 167, NS LOAD 2371
NS-NB=-200; NB-NE=300; CBX=543; ONI=773 ONS=863
3 PHASE FAULT ON L6503 AT TRENTON
CLEARED IN 6 CYCLES - RECLOSE ATTEMPT FROM ONSLOW
FILE: a103-L6503_3ph_1n_recl-2013WP-NS-import-200.out
CHNL# 146: [VOLT199280 [TUSKET A138.00]]
CHNL# 145: [VOLT199193 [HHWAS 138.00]]
CHNL# 144: [VOLT199165 [TUFTCOVE138.00]]
CHNL# 143: [VOLT199135 [SPRNGHILL138.00]]
CHNL# 142: [VOLT199090 [50N-TREN138.00]]
CHNL# 141: [VOLT199051 [HASTINGS138.00]]
1.2000
0.70000
0.0
1.0000
2.0000
3.0000
4.0000
5.0000
6.0000
7.0000
8.0000
9.0000
10.000
TIME (SECONDS)
TUE, JAN 27 2009 15:54
138KV BUS VOLTS

2013 WINTER PEAK STORA 167, NS LOAD 2371
NS-NB=-200; NB-NE=300; CBX=543; ONI=773 ONS=863
3 PHASE FAULT ON L6503 AT TRENTON
CLEARED IN 6 CYCLES - RECLOSE ATTEMPT FROM ONSLOW
FILE: a103-L6503_3ph_1n_recl-2013WP-NS-import-200.out
CHNL# 140: [VOLT199240 [BWATER A230.00]]
CHNL# 139: [VOLT199200 [BRUSHY 230.00]]
CHNL# 138: [VOLT199130 [ONSLOW 230.00]]
CHNL# 137: [VOLT199050 [HASTINGS230.00]]
CHNL# 136: [VOLT199044 [PT.ACONI230.00]]
CHNL# 135: [VOLT199000 [LINGAN 230.00]]
1.2000
0.70000
0.0
1.0000
2.0000
3.0000
4.0000
5.0000
6.0000
7.0000
8.0000
9.0000
10.000
TIME (SECONDS)
TUE, JAN 27 2009 15:54
230KV BUS VOLTS

2013 WINTER PEAK STORA 167, NS LOAD 2371
NS-NB=-200; NB-NE=300; CBX=543; ONI=773 ONS=863
3 PHASE FAULT ON L6503 AT TRENTON
CLEARED IN 6 CYCLES - RECLOSE ATTEMPT FROM ONSLOW
FILE: a103-L6503_3ph_1n_recl-2013WP-NS-import-200.out
CHNL# 217: [L6533MW]
CHNL# 215: [L6503MW]
CHNL# 197: [L8003MW]
CHNL# 195: [L8004MW]
CHNL# 193: [L8001MW]
CHNL# 221: [L3001MW]
250.00
-250.0
500.00
0.0
1000.0
-1000.
0.0
1.0000
2.0000
3.0000
4.0000
5.0000
6.0000
7.0000
8.0000
9.0000
10.000
TIME (SECONDS)
TUE, JAN 27 2009 15:54
LINE FLOW MW

2013 WINTER PEAK STORA 167, NS LOAD 2371
NS-NB=-200; NB-NE=300; CBX=543; ONI=773 ONS=863
3 PHASE FAULT ON L6503 AT TRENTON
CLEARED IN 6 CYCLES - RECLOSE ATTEMPT FROM ONSLOW
FILE: a103-L6503_3ph_1n_recl-2013WP-NS-import-200.out
CHNL# 154: [IR141-DIGBYH69.0 VOLTS]
CHNL# 153: [IR137-STATIG25.0 VOLTS]
CHNL# 152: [IR114-GLENDH138.0 VOLTS]
CHNL# 151: [IR84-DALHOHV230.0 VOLTS]
CHNL# 150: [IR82_NUTBHV69.0 VOLTS]
CHNL# 149: [IR45_AMHERTP138.0 VOLTS]
1.2000
0.70000
0.0
1.0000
2.0000
3.0000
4.0000
5.0000
6.0000
7.0000
8.0000
9.0000
10.000
TIME (SECONDS)
TUE, JAN 27 2009 15:54
WIND BUS VOLTS

2013 WINTER PEAK STORA 167, NS LOAD 2371
NS-NB=-200; NB-NE=300; CBX=543; ONI=773 ONS=863
3 PHASE FAULT ON B61 AT BRUSHY HILL 138KV
TRIPS 120H-T72
FILE: a104-120h-b61_3ph_nrecl-2013WP-NS-import-200.out
CHNL# 20: [ANGL199169 [TUFTCV3 14.400] [3]] [ANGL156661 [DARL G1 22.000] [1]
CHNL# 17: [ANGL199086 [TRENTON613.800] [6]] [ANGL156661 [DARL G1 22.000] [1]
CHNL# 16: [ANGL199085 [TRENTN5 13.800] [5]] [ANGL156661 [DARL G1 22.000] [1]
CHNL# 15: [ANGL199061 [TMP1 STO13.800] [1]] [ANGL156661 [DARL G1 22.000] [1]
CHNL# 13: [ANGL199043 [ACONIG1 20.000] [1]] [ANGL156661 [DARL G1 22.000] [1]
CHNL# 11: [ANGL199001 [LINGAN1 14.400] [1]] [ANGL156661 [DARL G1 22.000] [1]
TIME (SECONDS)
TUE, JAN 27 2009 15:54
NS ANGLE

2013 WINTER PEAK STORA 167, NS LOAD 2371
NS-NB=-200; NB-NE=300; CBX=543; ONI=773 ONS=863
3 PHASE FAULT ON B61 AT BRUSHY HILL 138KV
TRIPS 120H-T72
FILE: a104-120h-b61_3ph_nrecl-2013WP-NS-import-200.out
CHNL# 10: [ANGL190472 [BLLDNG2 19.000] [1]] [ANGL156661 [DARL G1 22.000] [1]
CHNL# 6: [ANGL190456 [LEPRG1 26.000] [1]] [ANGL156661 [DARL G1 22.000] [1]
CHNL# 5: [ANGL190450 [MACTG1 13.800] [1]] [ANGL156661 [DARL G1 22.000] [1]
CHNL# 3: [ANGL126652 [RAV 3 22.000] [1]] [ANGL156661 [DARL G1 22.000] [1]
CHNL# 2: [ANGL101063 [MYST G7 22.000] [1]] [ANGL156661 [DARL G1 22.000] [1]
CHNL# 1: [ANGL100060 [MIS GT1 18.000] [1]] [ANGL156661 [DARL G1 22.000] [1]
TIME (SECONDS)
TUE, JAN 27 2009 15:54
"NE,NY,NB ANGLE"

2013 WINTER PEAK STORA 167, NS LOAD 2371
NS-NB=-200; NB-NE=300; CBX=543; ONI=773 ONS=863
3 PHASE FAULT ON B61 AT BRUSHY HILL 138KV
TRIPS 120H-T72
FILE: a104-120h-b61_3ph_nrecl-2013WP-NS-import-200.out
CHNL# 59: [POWER199169 [TUFTCV3 14.400] [3]]
CHNL# 56: [POWER199086 [TRENTON613.800] [6]]
CHNL# 55: [POWER199085 [TRENTN5 13.800] [5]]
CHNL# 54: [POWER199061 [TMP1 STO13.800] [1]]
CHNL# 52: [POWER199043 [ACONIG1 20.000] [1]]
CHNL# 50: [POWER199001 [LINGAN1 14.400] [1]]
TIME (SECONDS)
TUE, JAN 27 2009 15:54
NS MW

2013 WINTER PEAK STORA 167, NS LOAD 2371
NS-NB=-200; NB-NE=300; CBX=543; ONI=773 ONS=863
3 PHASE FAULT ON B61 AT BRUSHY HILL 138KV
TRIPS 120H-T72
FILE: a104-120h-b61_3ph_nrecl-2013WP-NS-import-200.out
CHNL# 49: [POWER190472 [BLLDNG2 19.000] [1]]
CHNL# 45: [POWER190456 [LEPRG1 26.000] [1]]
CHNL# 44: [POWER190450 [MACTG1 13.800] [1]]
CHNL# 42: [POWER126652 [RAV 3 22.000] [1]]
CHNL# 41: [POWER101063 [MYST G7 22.000] [1]]
CHNL# 40: [POWER100060 [MIS GT1 18.000] [1]]
TIME (SECONDS)
TUE, JAN 27 2009 15:54
"NE,NY,NB POWER"

2013 WINTER PEAK STORA 167, NS LOAD 2371
NS-NB=-200; NB-NE=300; CBX=543; ONI=773 ONS=863
3 PHASE FAULT ON B61 AT BRUSHY HILL 138KV
TRIPS 120H-T72
FILE: a104-120h-b61_3ph_nrecl-2013WP-NS-import-200.out
CHNL# 119: [VARS IR141-DIGBY]
CHNL# 118: [VARS IR137-STATIA]
CHNL# 117: [VARS IR114-GLENDHU]
CHNL# 116: [VARS IR84-DALHOUSIE]
CHNL# 115: [VARS IR82_NUTTBY]
CHNL# 114: [VARS IR45_AMHERST]
TIME (SECONDS)
TUE, JAN 27 2009 15:54
NS WIND MV

2013 WINTER PEAK STORA 167, NS LOAD 2371
NS-NB=-200; NB-NE=300; CBX=543; ONI=773 ONS=863
3 PHASE FAULT ON B61 AT BRUSHY HILL 138KV
TRIPS 120H-T72
FILE: a104-120h-b61_3ph_nrecl-2013WP-NS-import-200.out
CHNL# 79: [POWER IR141-DIGBY]
CHNL# 78: [POWER IR137-STATIA]
CHNL# 77: [POWER IR114-GLENDHU]
CHNL# 76: [POWER IR84-DALHOUSIE]
CHNL# 75: [POWER IR82_NUTTBY]
CHNL# 74: [POWER IR45_AMHERST]
TIME (SECONDS)
TUE, JAN 27 2009 15:54
NS WIND MW

2013 WINTER PEAK STORA 167, NS LOAD 2371
NS-NB=-200; NB-NE=300; CBX=543; ONI=773 ONS=863
3 PHASE FAULT ON B61 AT BRUSHY HILL 138KV
TRIPS 120H-T72
FILE: a104-120h-b61_3ph_nrecl-2013WP-NS-import-200.out
CHNL# 133: [VOLT199125 [ONSLOW 345.00]]
CHNL# 132: [VOLT199120 [HOPEWELL 345.00]]
CHNL# 131: [VOLT199045 [WOODBINE345.00]]
CHNL# 130: [VOLT190320 [SALBRY 345.00]]
CHNL# 128: [VOLT190004 [KESWICK 345.00]]
CHNL# 127: [VOLT 70002 [ORRINGTN345.00]]
TIME (SECONDS)
TUE, JAN 27 2009 15:54
"345KV VOLTAGE"

2013 WINTER PEAK STORA 167, NS LOAD 2371
NS-NB=-200; NB-NE=300; CBX=543; ONI=773 ONS=863
3 PHASE FAULT ON B61 AT BRUSHY HILL 138KV
TRIPS 120H-T72
FILE: a104-120h-b61_3ph_nrecl-2013WP-NS-import-200.out
CHNL# 125: 60*(1+[FREQ199125 [ONSLOW 345.00]])
CHNL# 124: 60*(1+[FREQ199120 [HOPEWELL 345.00]])
CHNL# 123: 60*(1+[FREQ199045 [WOODBINE345.00]])
CHNL# 122: 60*(1+[FREQ190320 [SALBRY 345.00]])
CHNL# 121: 60*(1+[FREQ190197 [C.COVE 345.00]])
CHNL# 120: 60*(1+[FREQ 70002 [ORRINGTN345.00]])
TIME (SECONDS)
TUE, JAN 27 2009 15:54
FREQUENCY HZ

2013 WINTER PEAK STORA 167, NS LOAD 2371
NS-NB=-200; NB-NE=300; CBX=543; ONI=773 ONS=863
3 PHASE FAULT ON B61 AT BRUSHY HILL 138KV
TRIPS 120H-T72
FILE: a104-120h-b61_3ph_nrecl-2013WP-NS-import-200.out
CHNL# 146: [VOLT199280 [TUSKET A138.00]]
CHNL# 145: [VOLT199193 [HHWAS 138.00]]
CHNL# 144: [VOLT199165 [TUFTCOVE138.00]]
CHNL# 143: [VOLT199138 [SPRNGHIL138.00]]
CHNL# 142: [VOLT199090 [SON-TREN138.00]]
CHNL# 141: [VOLT199051 [HASTINGS138.00]]
TIME (SECONDS)
TUE, JAN 27 2009 15:54
138KV BUS VOLTS

2013 WINTER PEAK STORA 167, NS LOAD 2371
NS-NB=-200; NB-NE=300; CBX=543; ONI=773 ONS=863
3 PHASE FAULT ON B61 AT BRUSHY HILL 138KV
TRIPS 120H-T72
FILE: a104-120h-b61_3ph_nrecl-2013WP-NS-import-200.out
CHNL# 140: [VOLT199240 [BWATER A230.00]]
CHNL# 139: [VOLT199200 [BRUSHY 230.00]]
CHNL# 138: [VOLT199130 [ONSLOW 230.00]]
CHNL# 137: [VOLT199050 [HASTINGS230.00]]
CHNL# 136: [VOLT199044 [PT.ACONI230.00]]
CHNL# 135: [VOLT199000 [LINGAN 230.00]]
TIME (SECONDS)
TUE, JAN 27 2009 15:54
230KV BUS VOLTS

2013 WINTER PEAK STORA 167, NS LOAD 2371
NS-NB=-200; NB-NE=300; CBX=543; ONI=773 ONS=863
3 PHASE FAULT ON B61 AT BRUSHY HILL 138KV
TRIPS 120H-T72
FILE: a104-120h-b61_3ph_nrecl-2013WP-NS-import-200.out
CHNL# 217: [L6533MW]
CHNL# 215: [L6503MW]
CHNL# 197: [L8003MW]
CHNL# 195: [L8004MW]
CHNL# 193: [L8001MW]
CHNL# 221: [L3001MW]
TIME (SECONDS)
TUE, JAN 27 2009 15:54
LINE FLOW MW

2013 WINTER PEAK STORA 167, NS LOAD 2371
NS-NB=-200; NB-NE=300; CBX=543; ONI=773 ONS=863
3 PHASE FAULT ON B61 AT BRUSHY HILL 138KV
TRIPS 120H-T72
FILE: a104-120h-b61_3ph_nrecl-2013WP-NS-import-200.out
CHNL# 154: [IR141-DIGBYH69.0 VOLTS]
CHNL# 153: [IR137-STATIG25.0 VOLTS]
CHNL# 152: [IR114-GLENDH138.0 VOLTS]
CHNL# 151: [IR84-DALHOHV230.0 VOLTS]
CHNL# 150: [IR82-NUTBHV69.0 VOLTS]
CHNL# 149: [IR45-AMHERTP138.0 VOLTS]
TIME (SECONDS)
TUE, JAN 27 2009 15:54
WIND BUS VOLTS

2013 WINTER PEAK STORA 167, NS LOAD 2371
NS-NB=-200; NB-NE=300; CBX=543; ONI=773 ONS=863
3 PHASE FAULT ON L6012 AT 120H BRUSHY
RECLOSES IN 5 SECONDS
FILE: a105-L6012_3ph_recl-2013WP-NS-import-200.out
CHNL# 20: [ANGL199169 [TUFTCV3 14.400] [3]] [ANGL156661 [DARL G1 22.000] [1]
CHNL# 17: [ANGL199086 [TRENTON613.800] [6]] [ANGL156661 [DARL G1 22.000] [1]
CHNL# 16: [ANGL199085 [TRENTN5 13.800] [5]] [ANGL156661 [DARL G1 22.000] [1]
CHNL# 15: [ANGL199061 [TMP1 STO13.800] [1]] [ANGL156661 [DARL G1 22.000] [1]
CHNL# 13: [ANGL199043 [ACONIG1 20.000] [1]] [ANGL156661 [DARL G1 22.000] [1]
CHNL# 11: [ANGL199001 [LINGAN1 14.400] [1]] [ANGL156661 [DARL G1 22.000] [1]
TIME (SECONDS)
TUE, JAN 27 2009 15:54
NS ANGLE

2013 WINTER PEAK STORA 167, NS LOAD 2371
NS-NB=-200; NB-NE=300; CBX=543; ONI=773 ONS=863
3 PHASE FAULT ON L6012 AT 120H BRUSHY
RECLOSES IN 5 SECONDS
FILE: a105-L6012_3ph_recl-2013WP-NS-import-200.out
CHNL# 10: [ANGL190472 [BLLDNG2 19.000] [1]] [ANGL156661 [DARL G1 22.000] [1]
CHNL# 6: [ANGL190456 [LEPRG1 26.000] [1]] [ANGL156661 [DARL G1 22.000] [1]
CHNL# 5: [ANGL190450 [MACTG1 13.800] [1]] [ANGL156661 [DARL G1 22.000] [1]
CHNL# 3: [ANGL126652 [RAV 3 22.000] [1]] [ANGL156661 [DARL G1 22.000] [1]
CHNL# 2: [ANGL101063 [MYST G7 22.000] [1]] [ANGL156661 [DARL G1 22.000] [1]
CHNL# 1: [ANGL100060 [MIS GT1 18.000] [1]] [ANGL156661 [DARL G1 22.000] [1]
TIME (SECONDS)
TUE, JAN 27 2009 15:54
"NE,NY,NB ANGLE"

2013 WINTER PEAK STORA 167, NS LOAD 2371
NS-NB=-200; NB-NE=300; CBX=543; ONI=773 ONS=863
3 PHASE FAULT ON L6012 AT 120H BRUSHY
RECLOSES IN 5 SECONDS
FILE: a105-L6012_3ph_recl-2013WP-NS-import-200.out
CHNL# 59: [POWER199169 [TUFTCV3 14.400] [3]]
CHNL# 56: [POWER199086 [TRENTON613.800] [6]]
CHNL# 55: [POWER199085 [TRENTN5 13.800] [5]]
CHNL# 54: [POWER199061 [TMP1 STO13.800] [1]]
CHNL# 52: [POWER199043 [ACONIG1 20.000] [1]]
CHNL# 50: [POWER199001 [LINGAN1 14.400] [1]]
TIME (SECONDS)
TUE, JAN 27 2009 15:54
NS MW

2013 WINTER PEAK STORA 167, NS LOAD 2371
NS-NB=-200; NB-NE=300; CBX=543; ONI=773 ONS=863
3 PHASE FAULT ON L6012 AT 120H BRUSHY
RECLOSES IN 5 SECONDS
FILE: a105-L6012_3ph_recl-2013WP-NS-import-200.out
CHNL# 49: [POWER190472 [BLLDNG2 19.000] [1]]
CHNL# 45: [POWER190456 [LEPRG1 26.000] [1]]
CHNL# 44: [POWER190450 [MACTG1 13.800] [1]]
CHNL# 42: [POWER126652 [RAV 3 22.000] [1]]
CHNL# 41: [POWER101063 [MYST G7 22.000] [1]]
CHNL# 40: [POWER100060 [MIS GT1 18.000] [1]]
TIME (SECONDS)
TUE, JAN 27 2009 15:54
"NE,NY,NB POWER"

2013 WINTER PEAK STORA 167, NS LOAD 2371
NS-NB=-200; NB-NE=300; CBX=543; ONI=773 ONS=863
3 PHASE FAULT ON L6012 AT 120H BRUSHY
RECLOSES IN 5 SECONDS
FILE: a105-L6012_3ph_recl-2013WP-NS-import-200.out
CHNL# 119: [VARS IR141-DIGBY]
CHNL# 118: [VARS IR137-STATIA]
CHNL# 117: [VARS IR114-GLENDHU]
CHNL# 116: [VARS IR84-DALHOUSIE]
CHNL# 115: [VARS IR82_NUTTBY]
CHNL# 114: [VARS IR45_AMHERST]
TIME (SECONDS)
TUE, JAN 27 2009 15:54
NS WIND MV

2013 WINTER PEAK STORA 167, NS LOAD 2371
NS-NB=-200; NB-NE=300; CBX=543; ONI=773 ONS=863
3 PHASE FAULT ON L6012 AT 120H BRUSHY
RECLOSES IN 5 SECONDS
FILE: a105-L6012_3ph_recl-2013WP-NS-import-200.out
CHNL# 79: [POWER IR141-DIGBY]
CHNL# 78: [POWER IR137-STATIA]
CHNL# 77: [POWER IR114-GLENDHU]
CHNL# 76: [POWER IR84-DALHOUSIE]
CHNL# 75: [POWER IR82_NUTTBY]
CHNL# 74: [POWER IR45_AMHERST]
TIME (SECONDS)
TUE, JAN 27 2009 15:54
NS WIND MW

2013 WINTER PEAK STORA 167, NS LOAD 2371
NS-NB=-200; NB-NE=300; CBX=543; ONI=773 ONS=863
3 PHASE FAULT ON L6012 AT 120H BRUSHY
RECLOSES IN 5 SECONDS
FILE: a105-L6012_3ph_recl-2013WP-NS-import-200.out
CHNL# 133: [VOLT199125 IONSLOW 345.00]
CHNL# 132: [VOLT199120 [HOPEWELL 345.00]
CHNL# 131: [VOLT199045 [WOODBINE345.00]
CHNL# 130: [VOLT190320 [SALBRY 345.00]
CHNL# 128: [VOLT190004 [KESWICK 345.00]
CHNL# 127: [VOLT 70002 [ORRINGTN345.00]
TIME (SECONDS)
TUE, JAN 27 2009 15:54
"345KV VOLTAGE"

2013 WINTER PEAK STORA 167, NS LOAD 2371
NS-NB=-200; NB-NE=300; CBX=543; ONI=773 ONS=863
3 PHASE FAULT ON L6012 AT 120H BRUSHY
RECLOSES IN 5 SECONDS
FILE: a105-L6012_3ph_recl-2013WP-NS-import-200.out
CHNL# 125: 60*(1+[FREQ199125 IONSLOW 345.00])
CHNL# 124: 60*(1+[FREQ199120 [HOPEWELL 345.00])
CHNL# 123: 60*(1+[FREQ199045 [WOODBINE345.00])
CHNL# 122: 60*(1+[FREQ190320 [SALBRY 345.00])
CHNL# 121: 60*(1+[FREQ190197 [C.COVE 345.00])
CHNL# 120: 60*(1+[FREQ 70002 [ORRINGTN345.00])
TIME (SECONDS)
TUE, JAN 27 2009 15:54
FREQUENCY HZ

2013 WINTER PEAK STORA 167, NS LOAD 2371
NS-NB=-200; NB-NE=300; CBX=543; ONI=773 ONS=863
3 PHASE FAULT ON L6012 AT 120H BRUSHY
RECLOSES IN 5 SECONDS
FILE: a105-L6012_3ph_recl-2013WP-NS-import-200.out
CHNL# 146: [VOLT199280 [TUSKET A138.00]]
CHNL# 145: [VOLT199193 [HHWAS 138.00]]
CHNL# 144: [VOLT199165 [TUFTCOVE138.00]]
CHNL# 143: [VOLT199138 [SPRNGHILL138.00]]
CHNL# 142: [VOLT199090 [50N-TREN138.00]]
CHNL# 141: [VOLT199051 [HASTINGS138.00]]
TIME (SECONDS)
TUE, JAN 27 2009 15:54
138KV BUS VOLTS

2013 WINTER PEAK STORA 167, NS LOAD 2371
NS-NB=-200; NB-NE=300; CBX=543; ONI=773 ONS=863
3 PHASE FAULT ON L6012 AT 120H BRUSHY
RECLOSES IN 5 SECONDS
FILE: a105-L6012_3ph_recl-2013WP-NS-import-200.out
CHNL# 140: [VOLT199240 [BWATER A230.00]]
CHNL# 139: [VOLT199200 [BRUSHY 230.00]]
CHNL# 138: [VOLT199130 [ONSLOW 230.00]]
CHNL# 137: [VOLT199050 [HASTINGS230.00]]
CHNL# 136: [VOLT199044 [PT.ACONI230.00]]
CHNL# 135: [VOLT199000 [LINGAN 230.00]]
TIME (SECONDS)
TUE, JAN 27 2009 15:54
230KV BUS VOLTS

2013 WINTER PEAK STORA 167, NS LOAD 2371
NS-NB=-200; NB-NE=300; CBX=543; ONI=773 ONS=863
3 PHASE FAULT ON L6012 AT 120H BRUSHY
RECLOSES IN 5 SECONDS
FILE: a105-L6012_3ph_recl-2013WP-NS-import-200.out
CHNL# 217: [L6513MW]
CHNL# 215: [L6503MW]
CHNL# 197: [L8003MW]
CHNL# 195: [L8004MW]
CHNL# 193: [L8001MW]
CHNL# 221: [L3001MW]
TIME (SECONDS)
TUE, JAN 27 2009 15:54
LINE FLOW MW

2013 WINTER PEAK STORA 167, NS LOAD 2371
NS-NB=-200; NB-NE=300; CBX=543; ONI=773 ONS=863
3 PHASE FAULT ON L6012 AT 120H BRUSHY
RECLOSES IN 5 SECONDS
FILE: a105-L6012_3ph_recl-2013WP-NS-import-200.out
CHNL# 154: [IR141-DIGBYH69.0 VOLTS]
CHNL# 153: [IR137-STATIG25.0 VOLTS]
CHNL# 152: [IR114-GLENDH138.0 VOLTS]
CHNL# 151: [IR84-DALHOHV230.0 VOLTS]
CHNL# 150: [IR82_NUTBHV69.0 VOLTS]
CHNL# 149: [IR45_AMHERTP138.0 VOLTS]
TIME (SECONDS)
TUE, JAN 27 2009 15:54
WIND BUS VOLTS

2013 WINTER PEAK STORA 167, NS LOAD 2371
NS-NB=-200; NB-NE=300; CBX=543; ONI=773 ONS=863
3 PHASE FAULT ON B62 AT LAKESIDE
TRIPS L6008, L6016, 103H-T61
FILE: a106-103h-b62_3ph_nrecl-2013WP-NS-import-200.out
CHNL# S 20.4: [ANGL199169 [TUFTCV3 14.400] [3]] [ANGL156661 [DARL G1 22.000] [1
CHNL# S 17.4: [ANGL199086 [TRENTON613.800] [6]] [ANGL156661 [DARL G1 22.000] [1
CHNL# S 16.4: [ANGL199085 [TRENTN5 13.800] [5]] [ANGL156661 [DARL G1 22.000] [1
CHNL# S 15.4: [ANGL199061 [TMP1 STO13.800] [1]] [ANGL156661 [DARL G1 22.000] [1
CHNL# S 13.4: [ANGL199043 [ACONIG1 20.000] [1]] [ANGL156661 [DARL G1 22.000] [1
CHNL# S 11.4: [ANGL199001 [LINGAN1 14.400] [1]] [ANGL156661 [DARL G1 22.000] [1
TIME (SECONDS)
TUE, JAN 27 2009 15:54
NS ANGLE

2013 WINTER PEAK STORA 167, NS LOAD 2371
NS-NB=-200; NB-NE=300; CBX=543; ONI=773 ONS=863
3 PHASE FAULT ON B62 AT LAKESIDE
TRIPS L6008, L6016, 103H-T61
FILE: a106-103h-b62_3ph_nrecl-2013WP-NS-import-200.out
CHNL# S 10.4: [ANGL190472 [BLLDNG2 19.000] [1]] [ANGL156661 [DARL G1 22.000] [1
CHNL# S 6.4: [ANGL190456 [LEPRG1 26.000] [1]] [ANGL156661 [DARL G1 22.000] [1
CHNL# S 5.4: [ANGL190450 [MACTG1 13.800] [1]] [ANGL156661 [DARL G1 22.000] [1
CHNL# S 3.4: [ANGL126652 [RAV 3 22.000] [1]] [ANGL156661 [DARL G1 22.000] [1
CHNL# S 2.4: [ANGL101063 [MYST G7 22.000] [1]] [ANGL156661 [DARL G1 22.000] [1
CHNL# S 1.4: [ANGL100060 [MIS GT1 18.000] [1]] [ANGL156661 [DARL G1 22.000] [1
TIME (SECONDS)
TUE, JAN 27 2009 15:54
"NE,NY,NB ANGLE"

2013 WINTER PEAK STORA 167, NS LOAD 2371
NS-NB=-200; NB-NE=300; CBX=543; ONI=773 ONS=863
3 PHASE FAULT ON B62 AT LAKESIDE
TRIPS L6008, L6016, 103H-T61
FILE: a106-103h-b62_3ph_nrecl-2013WP-NS-import-200.out
CHNL# 59: [POWR199169 [TUFTCV3 14.400] [3]]
CHNL# 56: [POWR199086 [TRENTON613.800] [6]]
CHNL# 55: [POWR199085 [TRENTN5 13.800] [5]]
CHNL# 54: [POWR199061 [TMP1 STO13.800] [1]]
CHNL# 52: [POWR199043 [ACONIG1 20.000] [1]]
CHNL# 50: [POWR199001 [LINGAN1 14.400] [1]]
TIME (SECONDS)
TUE, JAN 27 2009 15:54
NS MW

2013 WINTER PEAK STORA 167, NS LOAD 2371
NS-NB=-200; NB-NE=300; CBX=543; ONI=773 ONS=863
3 PHASE FAULT ON B62 AT LAKESIDE
TRIPS L6008, L6016, 103H-T61
FILE: a106-103h-b62_3ph_nrecl-2013WP-NS-import-200.out
CHNL# 49: [POWER190472 [BLLDNG2 19.000] [1]]
CHNL# 45: [POWER190456 [LEPRG1 26.000] [1]]
CHNL# 44: [POWER190450 [MACTG1 13.800] [1]]
CHNL# 42: [POWER126652 [RAV 3 22.000] [1]]
CHNL# 41: [POWER101063 [MYST G7 22.000] [1]]
CHNL# 40: [POWER100060 [MIS GT1 18.000] [1]]
TIME (SECONDS)
TUE, JAN 27 2009 15:54
"NE,NY,NB POWER"

2013 WINTER PEAK STORA 167, NS LOAD 2371
NS-NB=-200; NB-NE=300; CBX=543; ONI=773 ONS=863
3 PHASE FAULT ON B62 AT LAKESIDE
TRIPS L6008, L6016, 103H-T61
FILE: a106-103h-b62_3ph_nrecl-2013WP-NS-import-200.out
CHNL# 119: [VARS IR141-DIGBY]
CHNL# 118: [VARS IR137-STATIA]
CHNL# 117: [VARS IR114-GLENDHU]
CHNL# 116: [VARS IR84-DALHOUSIE]
CHNL# 115: [VARS IR82_NUTTBY]
CHNL# 114: [VARS IR45_AMHERST]
TIME (SECONDS)
TUE, JAN 27 2009 15:54
NS WIND MV

2013 WINTER PEAK STORA 167, NS LOAD 2371
NS-NB=-200; NB-NE=300; CBX=543; ONI=773 ONS=863
3 PHASE FAULT ON B62 AT LAKESIDE
TRIPS L6008, L6016, 103H-T61
FILE: a106-103h-b62_3ph_nrecl-2013WP-NS-import-200.out
CHNL# 79: [POWER IR141-DIGBY]
CHNL# 78: [POWER IR137-STATIA]
CHNL# 77: [POWER IR114-GLENDHU]
CHNL# 76: [POWER IR84-DALHOUSIE]
CHNL# 75: [POWER IR82_NUTTBY]
CHNL# 74: [POWER IR45_AMHERST]
TIME (SECONDS)
TUE, JAN 27 2009 15:54
NS WIND MW

2013 WINTER PEAK STORA 167, NS LOAD 2371
NS-NB=-200; NB-NE=300; CBX=543; ONI=773 ONS=863
3 PHASE FAULT ON B62 AT LAKESIDE
TRIPS L6008, L6016, 103H-T61
FILE: a106-103h-b62_3ph_nrecl-2013WP-NS-import-200.out
CHNL# 133: [VOLT199125 [ONSLOW 345.00]]
CHNL# 132: [VOLT199120 [HOPEWELL 345.00]]
CHNL# 131: [VOLT199045 [WOODBINE345.00]]
CHNL# 130: [VOLT190320 [SALBRY 345.00]]
CHNL# 128: [VOLT190004 [KESWICK 345.00]]
CHNL# 127: [VOLT 70002 [ORRINGTN345.00]]
TIME (SECONDS)
TUE, JAN 27 2009 15:54
"345KV VOLTAGE"

2013 WINTER PEAK STORA 167, NS LOAD 2371
NS-NB=-200; NB-NE=300; CBX=543; ONI=773 ONS=863
3 PHASE FAULT ON B62 AT LAKESIDE
TRIPS L6008, L6016, 103H-T61
FILE: a106-103h-b62_3ph_nrecl-2013WP-NS-import-200.out
CHNL# 125: 60*(1+[FREQ199125 [ONSLOW 345.00]])
CHNL# 124: 60*(1+[FREQ199120 [HOPEWELL 345.00]])
CHNL# 123: 60*(1+[FREQ199045 [WOODBINE345.00]])
CHNL# 122: 60*(1+[FREQ190320 [SALBRY 345.00]])
CHNL# 121: 60*(1+[FREQ190197 [C.COVE 345.00]])
CHNL# 120: 60*(1+[FREQ 70002 [ORRINGTN345.00]])
TIME (SECONDS)
TUE, JAN 27 2009 15:54
FREQUENCY HZ

2013 WINTER PEAK STORA 167, NS LOAD 2371
NS-NB=-200; NB-NE=300; CBX=543; ONI=773 ONS=863
3 PHASE FAULT ON B62 AT LAKESIDE
TRIPS L6008, L6016, 103H-T61
FILE: a106-103h-b62_3ph_nrecl-2013WP-NS-import-200.out
CHNL# 146: [VOLT199280 [TUSKET A138.00]]
CHNL# 145: [VOLT199193 [HHWAS 138.00]]
CHNL# 144: [VOLT199165 [TUFTCOVE138.00]]
CHNL# 143: [VOLT199135 [SPRNGHILL138.00]]
CHNL# 142: [VOLT199090 [SON-TREN138.00]]
CHNL# 141: [VOLT199051 [HASTINGS138.00]]
TIME (SECONDS)
TUE, JAN 27 2009 15:54
138KV BUS VOLTS

2013 WINTER PEAK STORA 167, NS LOAD 2371
NS-NB=-200; NB-NE=300; CBX=543; ONI=773 ONS=863
3 PHASE FAULT ON B62 AT LAKESIDE
TRIPS L6008, L6016, 103H-T61
FILE: a106-103h-b62_3ph_nrecl-2013WP-NS-import-200.out
CHNL# 140: [VOLT199240 [BWATER A230.00]]
CHNL# 139: [VOLT199200 [BRUSHY 230.00]]
CHNL# 138: [VOLT199130 [ONSLOW 230.00]]
CHNL# 137: [VOLT199050 [HASTINGS230.00]]
CHNL# 136: [VOLT199044 [PT.ACONI230.00]]
CHNL# 135: [VOLT199000 [LINGAN 230.00]]
TIME (SECONDS)
TUE, JAN 27 2009 15:54
230KV BUS VOLTS

2013 WINTER PEAK STORA 167, NS LOAD 2371
NS-NB=-200; NB-NE=300; CBX=543; ONI=773 ONS=863
3 PHASE FAULT ON B62 AT LAKESIDE
TRIPS L6008, L6016, 103H-T61
FILE: a106-103h-b62_3ph_nrecl-2013WP-NS-import-200.out
CHNL# 217: [L6513MW]
CHNL# 215: [L6503MW]
CHNL# 197: [L8003MW]
CHNL# 195: [L8004MW]
CHNL# 193: [L8001MW]
CHNL# 221: [L3001MW]
TIME (SECONDS)
TUE, JAN 27 2009 15:54
LINE FLOW MW

2013 WINTER PEAK STORA 167, NS LOAD 2371
NS-NB=-200; NB-NE=300; CBX=543; ONI=773 ONS=863
3 PHASE FAULT ON B62 AT LAKESIDE
TRIPS L6008, L6016, 103H-T61
FILE: a106-103h-b62_3ph_nrecl-2013WP-NS-import-200.out
CHNL# 154: [IR141-DIGBYH69.0 VOLTS]
CHNL# 153: [IR137-STATIG25.0 VOLTS]
CHNL# 152: [IR114-GLENDH138.0 VOLTS]
CHNL# 151: [IR84-DALHOHV230.0 VOLTS]
CHNL# 150: [IR82_NUTBHV69.0 VOLTS]
CHNL# 149: [IR45_AMHERTP138.0 VOLTS]
TIME (SECONDS)
TUE, JAN 27 2009 15:54
WIND BUS VOLTS

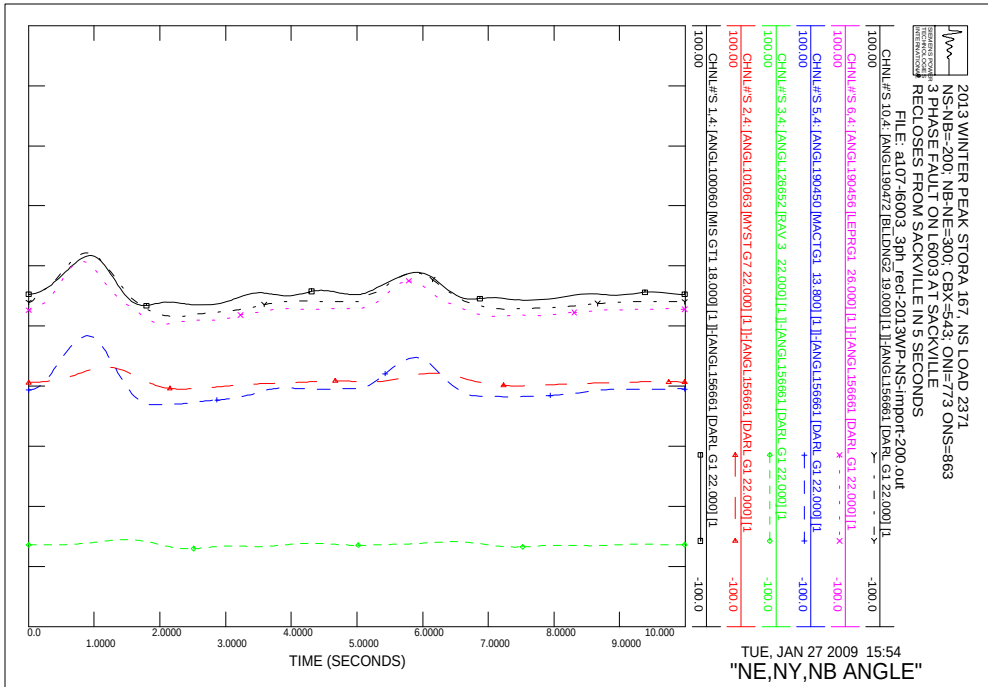
2013 WINTER PEAK STORA 167, NS LOAD 2371
NS-NB=-200; NB-NE=300; CBX=543; ONI=773 ONS=863
3 PHASE FAULT ON L6003 AT SACKVILLE
RECLOSES FROM SACKVILLE IN 5 SECONDS
FILE: a107-l6003_3ph_recl-2013WP-NS-import-200.out
CHNL#'S 10,4: [ANGL190472 [BLLDNG2 19.000] [1]]-[ANGL156661 [DARL G1 22.000] [1
CHNL#'S 6,4: [ANGL190456 [LEPRG1 26.000] [1]]-[ANGL156661 [DARL G1 22.000] [1
CHNL#'S 5,4: [ANGL190450 [MACTG1 13.800] [1]]-[ANGL156661 [DARL G1 22.000] [1
CHNL#'S 3,4: [ANGL126652 [RAV 3 22.000] [1]]-[ANGL156661 [DARL G1 22.000] [1
CHNL#'S 2,4: [ANGL101063 [MYST G7 22.000] [1]]-[ANGL156661 [DARL G1 22.000] [1
CHNL#'S 1,4: [ANGL100060 [MIS GT1 18.000] [1]]-[ANGL156661 [DARL G1 22.000] [1
TIME (SECONDS)
TUE, JAN 27 2009 15:54
"NE,NY,NB ANGLE"

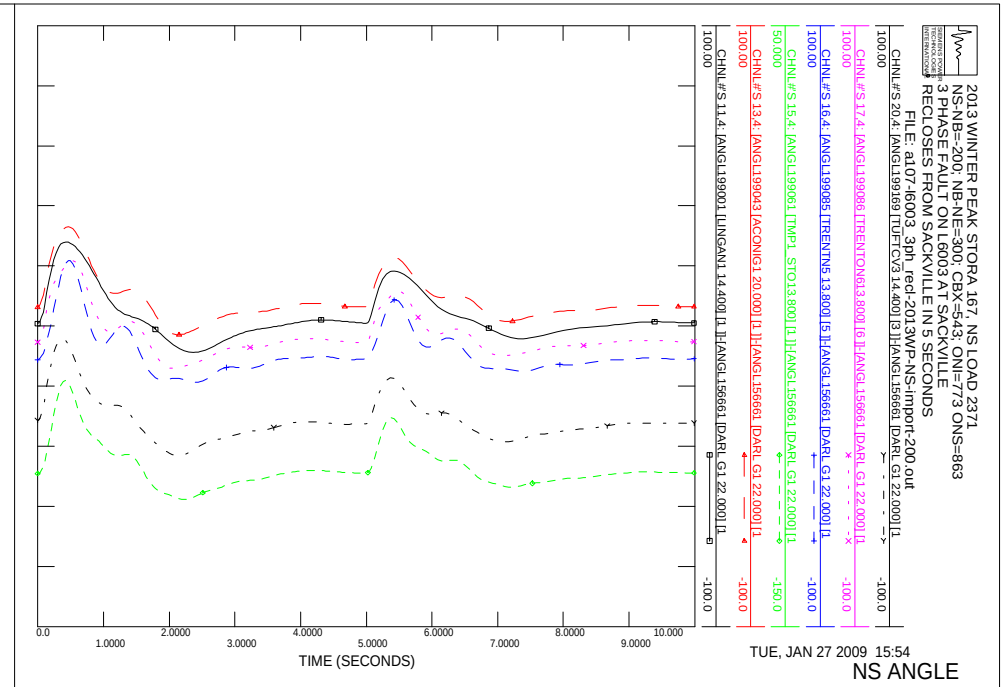
2013 WINTER PEAK STORA 167, NS LOAD 2371
NS-NB=-200; NB-NE=300; CBX=543; ONI=773 ONS=863
3 PHASE FAULT ON L6003 AT SACKVILLE
RECLOSES FROM SACKVILLE IN 5 SECONDS
FILE: a107-l6003_3ph_recl-2013WP-NS-import-200.out
CHNL#'S 20,4: [ANGL199169 [TUFTCV3 14.400] [3]]-[ANGL156661 [DARL G1 22.000] [1
CHNL#'S 17,4: [ANGL199086 [TRENTON613.800] [6]]-[ANGL156661 [DARL G1 22.000] [1
CHNL#'S 16,4: [ANGL199085 [TRENTN5 13.800] [5]]-[ANGL156661 [DARL G1 22.000] [1
CHNL#'S 15,4: [ANGL199061 [TMP1 STO13.800] [1]]-[ANGL156661 [DARL G1 22.000] [1
CHNL#'S 13,4: [ANGL199043 [ACONIG1 20.000] [1]]-[ANGL156661 [DARL G1 22.000] [1
CHNL#'S 11,4: [ANGL199001 [LINGAN1 14.400] [1]]-[ANGL156661 [DARL G1 22.000] [1
TIME (SECONDS)
TUE, JAN 27 2009 15:54
NS ANGLE

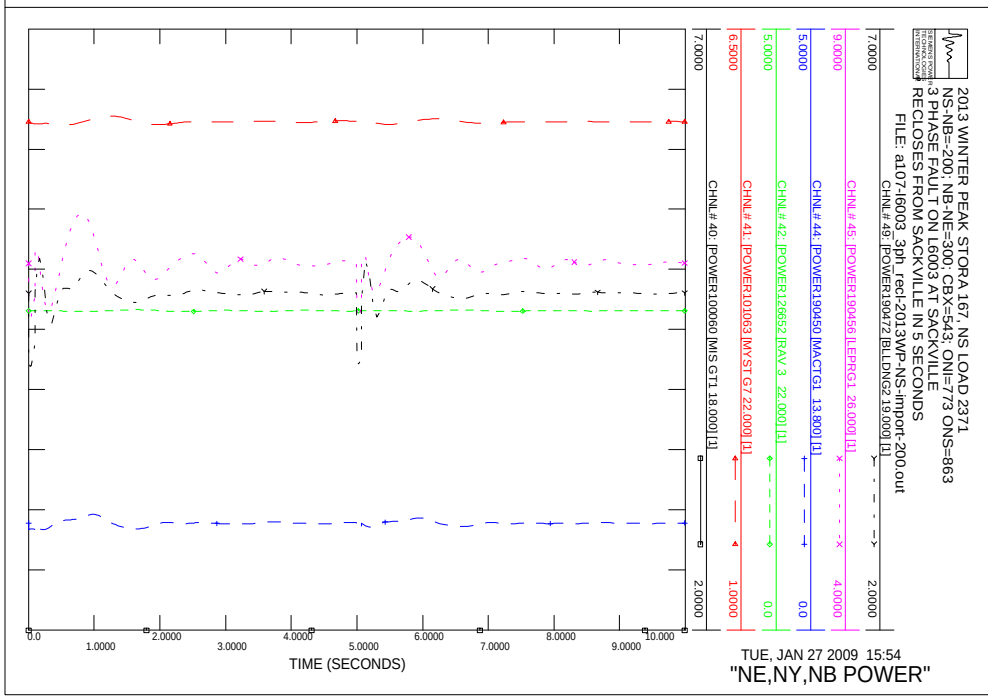
2013 WINTER PEAK STORA 167, NS LOAD 2371
NS-NB=-200; NB-NE=300; CBX=543; ONI=773 ONS=863
3 PHASE FAULT ON L6003 AT SACKVILLE
RECLOSES FROM SACKVILLE IN 5 SECONDS
FILE: a107-l6003_3ph_recl-2013WP-NS-import-200.out
CHNL# 49: [POWER190472 [BLLDNG2 19.000] [1]]
CHNL# 45: [POWER190456 [LEPRG1 26.000] [1]]
CHNL# 44: [POWER190450 [MACTG1 13.800] [1]]
CHNL# 42: [POWER126652 [RAV 3 22.000] [1]]
CHNL# 41: [POWER101063 [MYST G7 22.000] [1]]
CHNL# 40: [POWER100060 [MIS GT1 18.000] [1]]
TIME (SECONDS)
TUE, JAN 27 2009 15:54
"NE,NY,NB POWER"

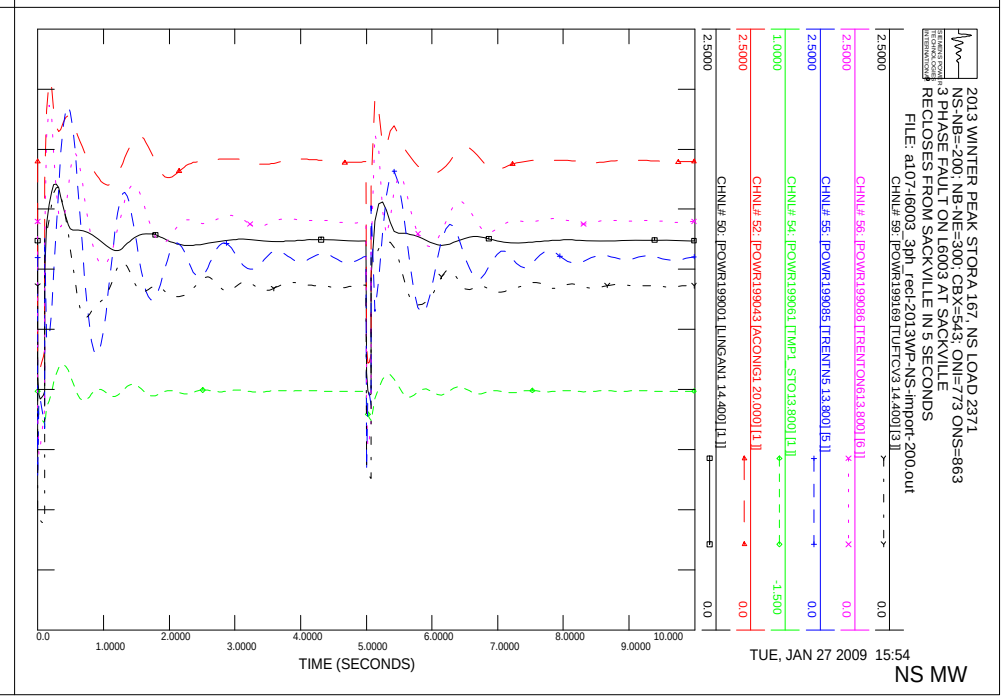
2013 WINTER PEAK STORA 167, NS LOAD 2371
NS-NB=-200; NB-NE=300; CBX=543; ONI=773 ONS=863
3 PHASE FAULT ON L6003 AT SACKVILLE
RECLOSES FROM SACKVILLE IN 5 SECONDS
FILE: a107-l6003_3ph_recl-2013WP-NS-import-200.out
CHNL# 59: [POWR199169 [TUFTCV3 14.400] [3]]
CHNL# 56: [POWR199086 [TRENTON613.800] [6]]
CHNL# 55: [POWR199085 [TRENTN5 13.800] [5]]
CHNL# 54: [POWR199061 [TMP1 STO13.800] [1]]
CHNL# 52: [POWR199043 [ACONIG1 20.000] [1]]
CHNL# 50: [POWR199001 [LINGAN1 14.400] [1]]
TIME (SECONDS)
TUE, JAN 27 2009 15:54
NS MW

2013 WINTER PEAK STORA 167, NS LOAD 2371
NS-NB=-200; NB-NE=300; CBX=543; ONI=773 ONS=863
3 PHASE FAULT ON L6003 AT SACKVILLE
RECLOSES FROM SACKVILLE IN 5 SECONDS
FILE: a107-l6003_3ph_rect-2013WP-NS-import-200.out
CHNL# 119: [VARS IR141-DIGBY]
CHNL# 118: [VARS IR137-STATIA]
CHNL# 117: [VARS IR114-GLENDHU]
CHNL# 116: [VARS IR84-DALHOUSIE]
CHNL# 115: [VARS IR82_NUTTBY]
CHNL# 114: [VARS IR45_AMHERST]
TIME (SECONDS)
TUE, JAN 27 2009 15:54
NS WIND MV

2013 WINTER PEAK STORA 167, NS LOAD 2371
NS-NB=-200; NB-NE=300; CBX=543; ONI=773 ONS=863
3 PHASE FAULT ON L6003 AT SACKVILLE
RECLOSES FROM SACKVILLE IN 5 SECONDS
FILE: a107-l6003_3ph_rect-2013WP-NS-import-200.out
CHNL# 79: [POWER IR141-DIGBY]
CHNL# 78: [POWER IR137-STATIA]
CHNL# 77: [POWER IR114-GLENDHU]
CHNL# 76: [POWER IR84-DALHOUSIE]
CHNL# 75: [POWER IR82_NUTTBY]
CHNL# 74: [POWER IR45_AMHERST]
TIME (SECONDS)
TUE, JAN 27 2009 15:54
NS WIND MW

2013 WINTER PEAK STORA 167, NS LOAD 2371
NS-NB=-200; NB-NE=300; CBX=543; ONI=773 ONS=863
3 PHASE FAULT ON L6003 AT SACKVILLE
RECLOSES FROM SACKVILLE IN 5 SECONDS
FILE: a107-l6003_3ph_rect-2013WP-NS-import-200.out
CHNL# 133: [VOLT199125 [ONSLOW 345.00]]
CHNL# 132: [VOLT199120 [HOPEWELL 345.00]]
CHNL# 131: [VOLT199045 [WOODBINE345.00]]
CHNL# 130: [VOLT190320 [SALBRY 345.00]]
CHNL# 128: [VOLT190004 [KESWICK 345.00]]
CHNL# 127: [VOLT 70002 [ORRINGTN345.00]]
TIME (SECONDS)
TUE, JAN 27 2009 15:54
"345KV VOLTAGE"

2013 WINTER PEAK STORA 167, NS LOAD 2371
NS-NB=-200; NB-NE=300; CBX=543; ONI=773 ONS=863
3 PHASE FAULT ON L6003 AT SACKVILLE
RECLOSES FROM SACKVILLE IN 5 SECONDS
FILE: a107-l6003_3ph_rect-2013WP-NS-import-200.out
CHNL# 125: 60*(1+[FREQ199125 [ONSLOW 345.00]])
CHNL# 124: 60*(1+[FREQ199120 [HOPEWELL 345.00]])
CHNL# 123: 60*(1+[FREQ199045 [WOODBINE345.00]])
CHNL# 122: 60*(1+[FREQ190320 [SALBRY 345.00]])
CHNL# 121: 60*(1+[FREQ190197 [C.COVE 345.00]])
CHNL# 120: 60*(1+[FREQ 70002 [ORRINGTN345.00]])
TIME (SECONDS)
TUE, JAN 27 2009 15:54
FREQUENCY HZ

2013 WINTER PEAK STORA 167, NS LOAD 2371
NS-NB=-200; NB-NE=300; CBX=543; ONI=773 ONS=863
3 PHASE FAULT ON L6003 AT SACKVILLE
RECLOSES FROM SACKVILLE IN 5 SECONDS
FILE: a107-l6003_3ph_rect-2013WP-NS-import-200.out
CHNL# 146: [VOLT199280 [TUSKET A138.00]]
CHNL# 145: [VOLT199193 [HHWAS 138.00]]
CHNL# 144: [VOLT199165 [TUFTCOVE138.00]]
CHNL# 143: [VOLT199138 [SPRNGHIL138.00]]
CHNL# 142: [VOLT199090 [50N-TREN138.00]]
CHNL# 141: [VOLT199051 [HASTINGS138.00]]
1.2000
0.70000
0.0
1.0000
2.0000
3.0000
4.0000
5.0000
6.0000
7.0000
8.0000
9.0000
10.000
TIME (SECONDS)
TUE, JAN 27 2009 15:54
138KV BUS VOLTS

2013 WINTER PEAK STORA 167, NS LOAD 2371
NS-NB=-200; NB-NE=300; CBX=543; ONI=773 ONS=863
3 PHASE FAULT ON L6003 AT SACKVILLE
RECLOSES FROM SACKVILLE IN 5 SECONDS
FILE: a107-l6003_3ph_rect-2013WP-NS-import-200.out
CHNL# 140: [VOLT199240 [BWATER A230.00]]
CHNL# 139: [VOLT199200 [BRUSHY 230.00]]
CHNL# 138: [VOLT199130 [ONSLOW 230.00]]
CHNL# 137: [VOLT199050 [HASTINGS230.00]]
CHNL# 136: [VOLT199044 [PT.ACONI230.00]]
CHNL# 135: [VOLT199000 [LINGAN 230.00]]
1.2000
0.70000
0.0
1.0000
2.0000
3.0000
4.0000
5.0000
6.0000
7.0000
8.0000
9.0000
10.000
TIME (SECONDS)
TUE, JAN 27 2009 15:54
230KV BUS VOLTS

2013 WINTER PEAK STORA 167, NS LOAD 2371
NS-NB=-200; NB-NE=300; CBX=543; ONI=773 ONS=863
3 PHASE FAULT ON L6003 AT SACKVILLE
RECLOSES FROM SACKVILLE IN 5 SECONDS
FILE: a107-l6003_3ph_rect-2013WP-NS-import-200.out
CHNL# 217: [L6533MW]
CHNL# 215: [L6503MW]
CHNL# 197: [L8003MW]
CHNL# 195: [L8004MW]
CHNL# 193: [L8001MW]
CHNL# 221: [L3001MW]
250.00
-250.0
500.00
0.0
1000.0
-1000.
0.0
1.0000
2.0000
3.0000
4.0000
5.0000
6.0000
7.0000
8.0000
9.0000
10.000
TIME (SECONDS)
TUE, JAN 27 2009 15:54
LINE FLOW MW

2013 WINTER PEAK STORA 167, NS LOAD 2371
NS-NB=-200; NB-NE=300; CBX=543; ONI=773 ONS=863
3 PHASE FAULT ON L6003 AT SACKVILLE
RECLOSES FROM SACKVILLE IN 5 SECONDS
FILE: a107-l6003_3ph_rect-2013WP-NS-import-200.out
CHNL# 154: [IR141-DIGBYH69.0 VOLTS]
CHNL# 153: [IR137-STATIG25.0 VOLTS]
CHNL# 152: [IR114-GLENDH138.0 VOLTS]
CHNL# 151: [IR84-DALHOHV230.0 VOLTS]
CHNL# 150: [IR82_NUTBHV69.0 VOLTS]
CHNL# 149: [IR45_AMHERTP138.0 VOLTS]
1.2000
0.70000
0.0
1.0000
2.0000
3.0000
4.0000
5.0000
6.0000
7.0000
8.0000
9.0000
10.000
TIME (SECONDS)
TUE, JAN 27 2009 15:54
WIND BUS VOLTS

2013 WINTER PEAK STORA 167, NS LOAD 2371
NS-NB=-200; NB-NE=300; CBX=543; ONI=773 ONS=863
3 PHASE FAULT ON L6003 AT TUFTS COVE
CLEARS FAULT IN 6 CYCLES RECLOSES FROM TUFTS COVE IN 3S
FILE: a108-l6003_91H_3ph_recl-2013WP-NS-import-200.out
CHNL# 20: [ANGL199169 [TUFTCV3 14.400] [3]] [ANGL156661 [DARL G1 22.000] [1
CHNL# 17: [ANGL199086 [TRENTON613.800] [6]] [ANGL156661 [DARL G1 22.000] [1
CHNL# 16: [ANGL199085 [TRENTN5 13.800] [5]] [ANGL156661 [DARL G1 22.000] [1
CHNL# 15: [ANGL199061 [TMP1 STO13.800] [1]] [ANGL156661 [DARL G1 22.000] [1
CHNL# 13: [ANGL199043 [ACONIG1 20.000] [1]] [ANGL156661 [DARL G1 22.000] [1
CHNL# 11: [ANGL199001 [LINGAN1 14.400] [1]] [ANGL156661 [DARL G1 22.000] [1
TIME (SECONDS)
TUE, JAN 27 2009 15:54
NS ANGLE

2013 WINTER PEAK STORA 167, NS LOAD 2371
NS-NB=-200; NB-NE=300; CBX=543; ONI=773 ONS=863
3 PHASE FAULT ON L6003 AT TUFTS COVE
CLEARS FAULT IN 6 CYCLES RECLOSES FROM TUFTS COVE IN 3S
FILE: a108-l6003_91H_3ph_recl-2013WP-NS-import-200.out
CHNL# 10: [ANGL190472 [BLLDNG2 19.000] [1]] [ANGL156661 [DARL G1 22.000] [1
CHNL# 6: [ANGL190456 [LEPRG1 26.000] [1]] [ANGL156661 [DARL G1 22.000] [1
CHNL# 5: [ANGL190450 [MACTG1 13.800] [1]] [ANGL156661 [DARL G1 22.000] [1
CHNL# 3: [ANGL126652 [RAV 3 22.000] [1]] [ANGL156661 [DARL G1 22.000] [1
CHNL# 2: [ANGL101063 [MYST G7 22.000] [1]] [ANGL156661 [DARL G1 22.000] [1
CHNL# 1: [ANGL100060 [MIS GT1 18.000] [1]] [ANGL156661 [DARL G1 22.000] [1
TIME (SECONDS)
TUE, JAN 27 2009 15:54
"NE,NY,NB ANGLE"

2013 WINTER PEAK STORA 167, NS LOAD 2371
NS-NB=-200; NB-NE=300; CBX=543; ONI=773 ONS=863
3 PHASE FAULT ON L6003 AT TUFTS COVE
CLEARS FAULT IN 6 CYCLES RECLOSES FROM TUFTS COVE IN 3S
FILE: a108-l6003_91H_3ph_recl-2013WP-NS-import-200.out
CHNL# 59: [POWER199169 [TUFTCV3 14.400] [3]]
CHNL# 56: [POWER199086 [TRENTON613.800] [6]]
CHNL# 55: [POWER199085 [TRENTN5 13.800] [5]]
CHNL# 54: [POWER199061 [TMP1 STO13.800] [1]]
CHNL# 52: [POWER199043 [ACONIG1 20.000] [1]]
CHNL# 50: [POWER199001 [LINGAN1 14.400] [1]]
TIME (SECONDS)
TUE, JAN 27 2009 15:54
NS MW

2013 WINTER PEAK STORA 167, NS LOAD 2371
NS-NB=-200; NB-NE=300; CBX=543; ONI=773 ONS=863
3 PHASE FAULT ON L6003 AT TUFTS COVE
CLEARS FAULT IN 6 CYCLES RECLOSES FROM TUFTS COVE IN 3S
FILE: a108-l6003_91H_3ph_recl-2013WP-NS-import-200.out
CHNL# 49: [POWER190472 [BLLDNG2 19.000] [1]]
CHNL# 45: [POWER190456 [LEPRG1 26.000] [1]]
CHNL# 44: [POWER190450 [MACTG1 13.800] [1]]
CHNL# 42: [POWER126652 [RAV 3 22.000] [1]]
CHNL# 41: [POWER101063 [MYST G7 22.000] [1]]
CHNL# 40: [POWER100060 [MIS GT1 18.000] [1]]
TIME (SECONDS)
TUE, JAN 27 2009 15:54
"NE,NY,NB POWER"

2013 WINTER PEAK STORA 167, NS LOAD 2371
NS-NB=-200; NB-NE=300; CBX=543; ONI=773 ONS=863
3 PHASE FAULT ON L6003 AT TUFTS COVE
CLEARS FAULT IN 6 CYCLES RECLOSES FROM TUFTS COVE IN 3S
FILE: a108-l6003_91H_3ph_recl-2013WP-NS-import-200.out
CHNL# 119: [VARS IR141-DIGBY]
CHNL# 118: [VARS IR137-STATIA]
CHNL# 117: [VARS IR114-GLENDHU]
CHNL# 116: [VARS IR84-DALHOUSIE]
CHNL# 115: [VARS IR82_NUTTBY]
CHNL# 114: [VARS IR45_AMHERST]
TIME (SECONDS)
TUE, JAN 27 2009 15:54
NS WIND MV

2013 WINTER PEAK STORA 167, NS LOAD 2371
NS-NB=-200; NB-NE=300; CBX=543; ONI=773 ONS=863
3 PHASE FAULT ON L6003 AT TUFTS COVE
CLEARS FAULT IN 6 CYCLES RECLOSES FROM TUFTS COVE IN 3S
FILE: a108-l6003_91H_3ph_recl-2013WP-NS-import-200.out
CHNL# 79: [POWER IR141-DIGBY]
CHNL# 78: [POWER IR137-STATIA]
CHNL# 77: [POWER IR114-GLENDHU]
CHNL# 76: [POWER IR84-DALHOUSIE]
CHNL# 75: [POWER IR82_NUTTBY]
CHNL# 74: [POWER IR45_AMHERST]
TIME (SECONDS)
TUE, JAN 27 2009 15:54
NS WIND MW

2013 WINTER PEAK STORA 167, NS LOAD 2371
NS-NB=-200; NB-NE=300; CBX=543; ONI=773 ONS=863
3 PHASE FAULT ON L6003 AT TUFTS COVE
CLEARS FAULT IN 6 CYCLES RECLOSES FROM TUFTS COVE IN 3S
FILE: a108-l6003_91H_3ph_recl-2013WP-NS-import-200.out
CHNL# 133: [VOLT199125 [ONSLOW 345.00]]
CHNL# 132: [VOLT199120 [HOPEWELL 345.00]]
CHNL# 131: [VOLT199045 [WOODBINE345.00]]
CHNL# 130: [VOLT190320 [SALBRY 345.00]]
CHNL# 128: [VOLT190004 [KESWICK 345.00]]
CHNL# 127: [VOLT 70002 [ORRINGTN345.00]]
TIME (SECONDS)
TUE, JAN 27 2009 15:54
"345KV VOLTAGE"

2013 WINTER PEAK STORA 167, NS LOAD 2371
NS-NB=-200; NB-NE=300; CBX=543; ONI=773 ONS=863
3 PHASE FAULT ON L6003 AT TUFTS COVE
CLEARS FAULT IN 6 CYCLES RECLOSES FROM TUFTS COVE IN 3S
FILE: a108-l6003_91H_3ph_recl-2013WP-NS-import-200.out
CHNL# 125: 60*(1+[FREQ199125 [ONSLOW 345.00]])
CHNL# 124: 60*(1+[FREQ199120 [HOPEWELL 345.00]])
CHNL# 123: 60*(1+[FREQ199045 [WOODBINE345.00]])
CHNL# 122: 60*(1+[FREQ190320 [SALBRY 345.00]])
CHNL# 121: 60*(1+[FREQ190197 [C.COVE 345.00]])
CHNL# 120: 60*(1+[FREQ 70002 [ORRINGTN345.00]])
TIME (SECONDS)
TUE, JAN 27 2009 15:54
FREQUENCY HZ

2013 WINTER PEAK STORA 167, NS LOAD 2371
NS-NB=-200; NB-NE=300; CBX=543; ONI=773 ONS=863
3 PHASE FAULT ON L6003 AT TUFTS COVE
CLEARS FAULT IN 6 CYCLES RECLOSES FROM TUFTS COVE IN 3S
FILE: a108-l6003_91H_3ph_recl-2013WP-NS-import-200.out
CHNL# 146: [VOLT199280 [TUSKET A138.00]]
CHNL# 145: [VOLT199193 [HHWAS 138.00]]
CHNL# 144: [VOLT199165 [TUFTS COVE138.00]]
CHNL# 143: [VOLT199135 [SPRNGHILL138.00]]
CHNL# 142: [VOLT199090 [SON-TREN138.00]]
CHNL# 141: [VOLT199051 [HASTINGS138.00]]
1.2000
0.70000
0.0
1.0000
2.0000
3.0000
4.0000
5.0000
6.0000
7.0000
8.0000
9.0000
10.000
TIME (SECONDS)
TUE, JAN 27 2009 15:54
138KV BUS VOLTS

2013 WINTER PEAK STORA 167, NS LOAD 2371
NS-NB=-200; NB-NE=300; CBX=543; ONI=773 ONS=863
3 PHASE FAULT ON L6003 AT TUFTS COVE
CLEARS FAULT IN 6 CYCLES RECLOSES FROM TUFTS COVE IN 3S
FILE: a108-l6003_91H_3ph_recl-2013WP-NS-import-200.out
CHNL# 140: [VOLT199240 [BWATER A230.00]]
CHNL# 139: [VOLT199200 [BRUSHY 230.00]]
CHNL# 138: [VOLT199130 [ONSLOW 230.00]]
CHNL# 137: [VOLT199050 [HASTINGS230.00]]
CHNL# 136: [VOLT199044 [PT.ACONI230.00]]
CHNL# 135: [VOLT199000 [LINGAN 230.00]]
1.2000
0.70000
0.0
1.0000
2.0000
3.0000
4.0000
5.0000
6.0000
7.0000
8.0000
9.0000
10.000
TIME (SECONDS)
TUE, JAN 27 2009 15:54
230KV BUS VOLTS

2013 WINTER PEAK STORA 167, NS LOAD 2371
NS-NB=-200; NB-NE=300; CBX=543; ONI=773 ONS=863
3 PHASE FAULT ON L6003 AT TUFTS COVE
CLEARS FAULT IN 6 CYCLES RECLOSES FROM TUFTS COVE IN 3S
FILE: a108-l6003_91H_3ph_recl-2013WP-NS-import-200.out
CHNL# 217: [L6513MW]
CHNL# 215: [L6503MW]
CHNL# 197: [L8003MW]
CHNL# 195: [L8004MW]
CHNL# 193: [L8001MW]
CHNL# 221: [L3001MW]
250.00
-250.0
500.00
0.0
1000.0
-1000.
0.0
1.0000
2.0000
3.0000
4.0000
5.0000
6.0000
7.0000
8.0000
9.0000
10.000
TIME (SECONDS)
TUE, JAN 27 2009 15:54
LINE FLOW MW

2013 WINTER PEAK STORA 167, NS LOAD 2371
NS-NB=-200; NB-NE=300; CBX=543; ONI=773 ONS=863
3 PHASE FAULT ON L6003 AT TUFTS COVE
CLEARS FAULT IN 6 CYCLES RECLOSES FROM TUFTS COVE IN 3S
FILE: a108-l6003_91H_3ph_recl-2013WP-NS-import-200.out
CHNL# 154: [IR141-DIGBYH69.0 VOLTS]
CHNL# 153: [IR137-STATIG25.0 VOLTS]
CHNL# 152: [IR114-GLENDH138.0 VOLTS]
CHNL# 151: [IR84-DALHOHV230.0 VOLTS]
CHNL# 150: [IR82_NUTBHV69.0 VOLTS]
CHNL# 149: [IR45_AMHERTP138.0 VOLTS]
1.2000
0.70000
0.0
1.0000
2.0000
3.0000
4.0000
5.0000
6.0000
7.0000
8.0000
9.0000
10.000
TIME (SECONDS)
TUE, JAN 27 2009 15:54
WIND BUS VOLTS

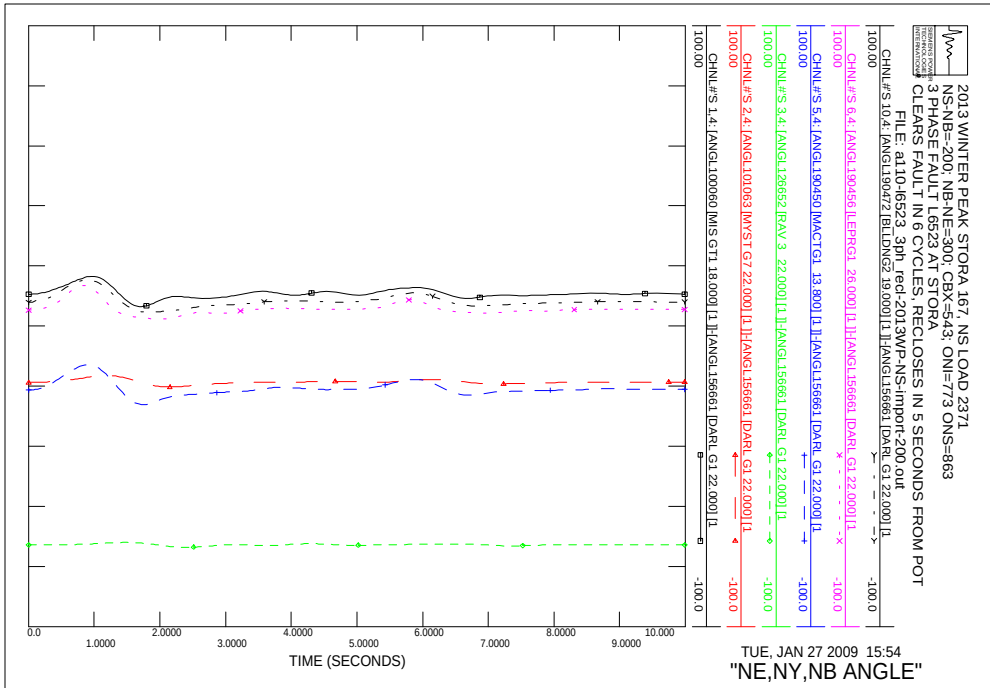
2013 WINTER PEAK STORA 167, NS LOAD 2371
NS-NB=-200; NB-NE=300; CBX=543; ONI=773 ONS=863
3 PHASE FAULT L6523 AT STORA
CLEARS FAULT IN 6 CYCLES, RECLOSES IN 5 SECONDS FROM POT
FILE: a110-l6523_3ph_recl-2013WP-NS-import-200.out
CHNL#'S 10,4: [ANGL190472 [BLLDNG2 19.000] [1]]-[ANGL156661 [DARL G1 22.000] [1
CHNL#'S 6,4: [ANGL190456 [LEPRG1 26.000] [1]]-[ANGL156661 [DARL G1 22.000] [1
CHNL#'S 5,4: [ANGL190450 [MACTG1 13.800] [1]]-[ANGL156661 [DARL G1 22.000] [1
CHNL#'S 3,4: [ANGL126652 [RAV 3 22.000] [1]]-[ANGL156661 [DARL G1 22.000] [1
CHNL#'S 2,4: [ANGL101063 [MYST G7 22.000] [1]]-[ANGL156661 [DARL G1 22.000] [1
CHNL#'S 1,4: [ANGL100060 [MIS GT1 18.000] [1]]-[ANGL156661 [DARL G1 22.000] [1
TIME (SECONDS)
TUE, JAN 27 2009 15:54
"NE,NY,NB ANGLE"

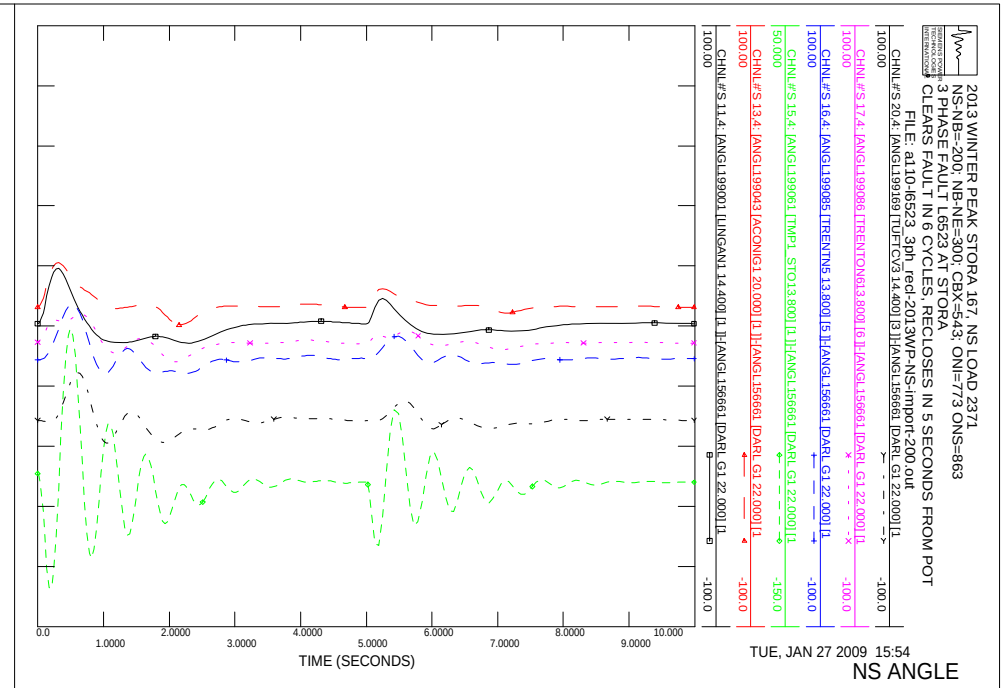
2013 WINTER PEAK STORA 167, NS LOAD 2371
NS-NB=-200; NB-NE=300; CBX=543; ONI=773 ONS=863
3 PHASE FAULT L6523 AT STORA
CLEARS FAULT IN 6 CYCLES, RECLOSES IN 5 SECONDS FROM POT
FILE: a110-l6523_3ph_recl-2013WP-NS-import-200.out
CHNL#'S 20,4: [ANGL199169 [TUFTCV3 14.400] [3]]-[ANGL156661 [DARL G1 22.000] [1
CHNL#'S 17,4: [ANGL199086 [TRENTON613.800] [6]]-[ANGL156661 [DARL G1 22.000] [1
CHNL#'S 16,4: [ANGL199085 [TRENTN5 13.800] [5]]-[ANGL156661 [DARL G1 22.000] [1
CHNL#'S 15,4: [ANGL199061 [TMP1 STO13.800] [1]]-[ANGL156661 [DARL G1 22.000] [1
CHNL#'S 13,4: [ANGL199043 [ACONIG1 20.000] [1]]-[ANGL156661 [DARL G1 22.000] [1
CHNL#'S 11,4: [ANGL199001 [LINGAN1 14.400] [1]]-[ANGL156661 [DARL G1 22.000] [1
TIME (SECONDS)
TUE, JAN 27 2009 15:54
NS ANGLE

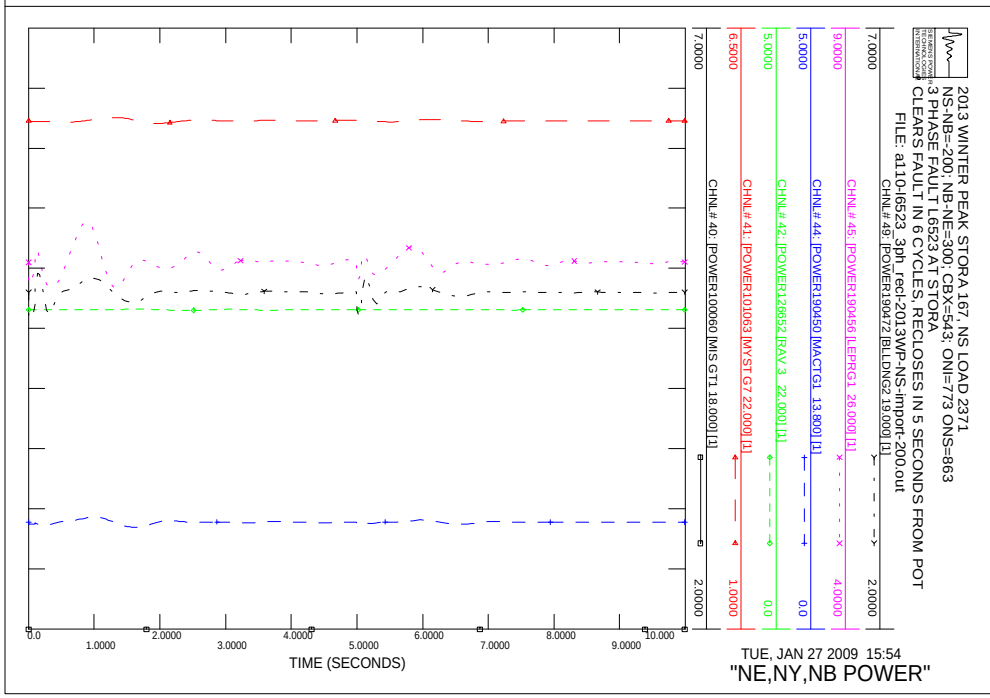
2013 WINTER PEAK STORA 167, NS LOAD 2371
NS-NB=-200; NB-NE=300; CBX=543; ONI=773 ONS=863
3 PHASE FAULT L6523 AT STORA
CLEARS FAULT IN 6 CYCLES, RECLOSES IN 5 SECONDS FROM POT
FILE: a110-l6523_3ph_recl-2013WP-NS-import-200.out
CHNL# 49: [POWER190472 [BLLDNG2 19.000] [1]
CHNL# 45: [POWER190456 [LEPRG1 26.000] [1]
CHNL# 44: [POWER190450 [MACTG1 13.800] [1]
CHNL# 42: [POWER126652 [RAV 3 22.000] [1]
CHNL# 41: [POWER101063 [MYST G7 22.000] [1]
CHNL# 40: [POWER100060 [MIS GT1 18.000] [1]
TIME (SECONDS)
TUE, JAN 27 2009 15:54
"NE,NY,NB POWER"

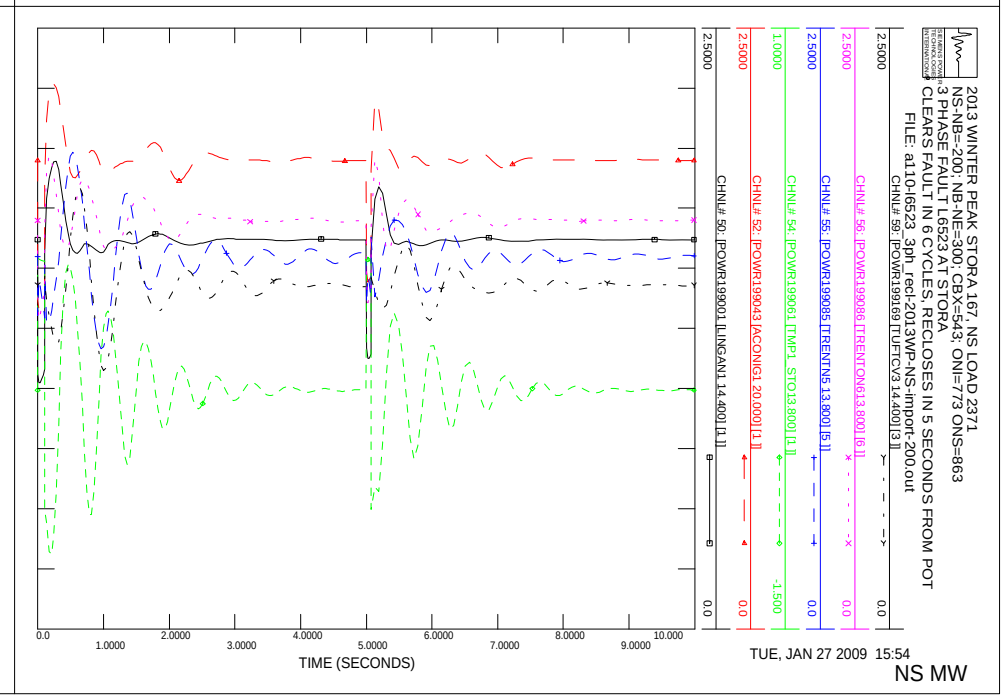
2013 WINTER PEAK STORA 167, NS LOAD 2371
NS-NB=-200; NB-NE=300; CBX=543; ONI=773 ONS=863
3 PHASE FAULT L6523 AT STORA
CLEARS FAULT IN 6 CYCLES, RECLOSES IN 5 SECONDS FROM POT
FILE: a110-l6523_3ph_recl-2013WP-NS-import-200.out
CHNL# 59: [POWR199169 [TUFTCV3 14.400] [3]]
CHNL# 56: [POWR199086 [TRENTON613.800] [6]]
CHNL# 55: [POWR199085 [TRENTN5 13.800] [5]]
CHNL# 54: [POWR199061 [TMP1 STO13.800] [1]]
CHNL# 52: [POWR199043 [ACONIG1 20.000] [1]]
CHNL# 50: [POWR199001 [LINGAN1 14.400] [1]]
TIME (SECONDS)
TUE, JAN 27 2009 15:54
NS MW

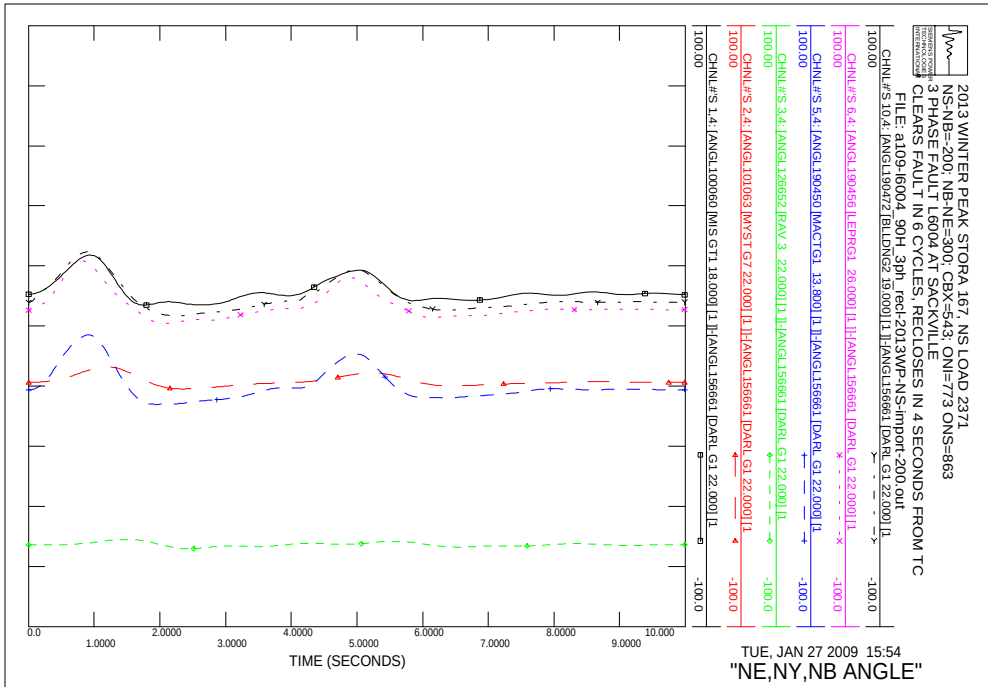
2013 WINTER PEAK STORA 167, NS LOAD 2371
NS-NB=-200; NB-NE=300; CBX=543; ONI=773 ONS=863
3 PHASE FAULT L6004 AT SACKVILLE
CLEARS FAULT IN 6 CYCLES, RECLOSES IN 4 SECONDS FROM TC
FILE: a109-l6004_90H_3ph_recl-2013WP-NS-import-200.out
CHNL#S 10,4: [ANGL190472 [BLLDNG2 19.000] [1]]-[ANGL156661 [DARL G1 22.000] [1
CHNL#S 6,4: [ANGL190456 [LEPRG1 26.000] [1]]-[ANGL156661 [DARL G1 22.000] [1
CHNL#S 5,4: [ANGL190450 [MACTG1 13.800] [1]]-[ANGL156661 [DARL G1 22.000] [1
CHNL#S 3,4: [ANGL126652 [RAV 3 22.000] [1]]-[ANGL156661 [DARL G1 22.000] [1
CHNL#S 2,4: [ANGL101063 [MYST G7 22.000] [1]]-[ANGL156661 [DARL G1 22.000] [1
CHNL#S 1,4: [ANGL100060 [MIS GT1 18.000] [1]]-[ANGL156661 [DARL G1 22.000] [1
TIME (SECONDS)
TUE, JAN 27 2009 15:54
"NE,NY,NB ANGLE"

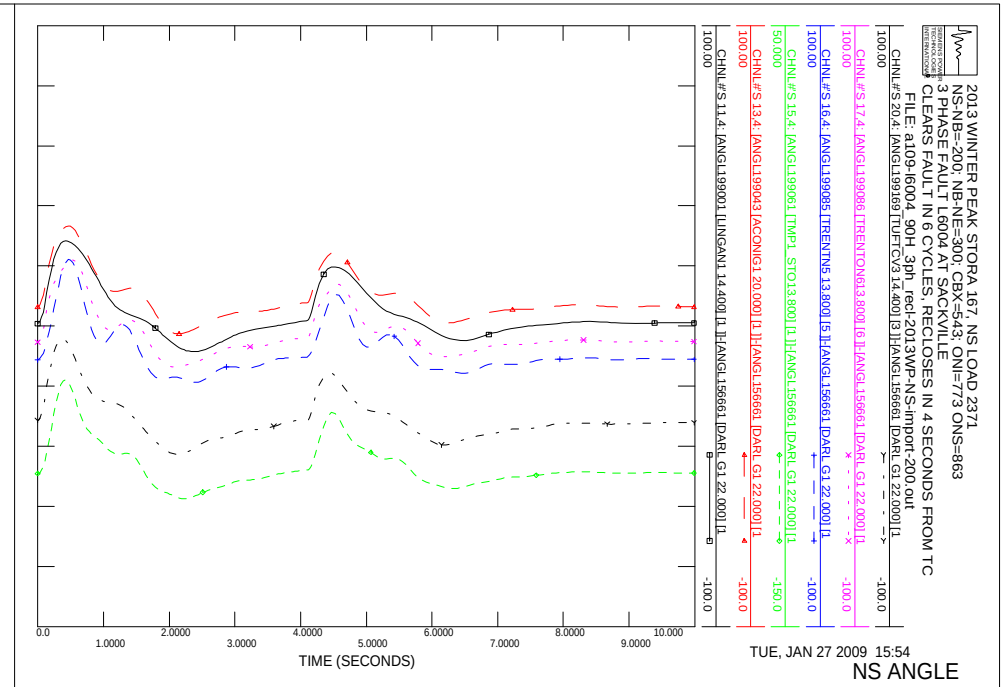
2013 WINTER PEAK STORA 167, NS LOAD 2371
NS-NB=-200; NB-NE=300; CBX=543; ONI=773 ONS=863
3 PHASE FAULT L6004 AT SACKVILLE
CLEARS FAULT IN 6 CYCLES, RECLOSES IN 4 SECONDS FROM TC
FILE: a109-l6004_90H_3ph_recl-2013WP-NS-import-200.out
CHNL#S 20,4: [ANGL199169 [TUFTCV3 14.400] [3]]-[ANGL156661 [DARL G1 22.000] [1
CHNL#S 17,4: [ANGL199086 [TRENTON613.800] [6]]-[ANGL156661 [DARL G1 22.000] [1
CHNL#S 16,4: [ANGL199085 [TRENTN5 13.800] [5]]-[ANGL156661 [DARL G1 22.000] [1
CHNL#S 15,4: [ANGL199061 [TMP1 STO13.800] [1]]-[ANGL156661 [DARL G1 22.000] [1
CHNL#S 13,4: [ANGL199043 [ACONIG1 20.000] [1]]-[ANGL156661 [DARL G1 22.000] [1
CHNL#S 11,4: [ANGL199001 [LINGAN1 14.400] [1]]-[ANGL156661 [DARL G1 22.000] [1
TIME (SECONDS)
TUE, JAN 27 2009 15:54
NS ANGLE

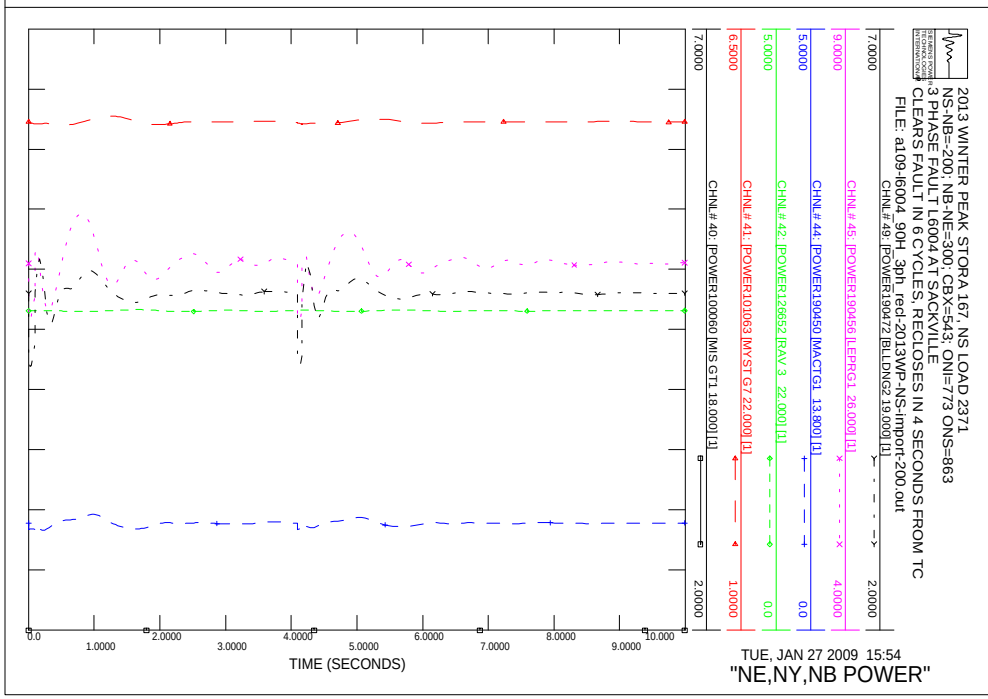
2013 WINTER PEAK STORA 167, NS LOAD 2371
NS-NB=-200; NB-NE=300; CBX=543; ONI=773 ONS=863
3 PHASE FAULT L6004 AT SACKVILLE
CLEARS FAULT IN 6 CYCLES, RECLOSES IN 4 SECONDS FROM TC
FILE: a109-l6004_90H_3ph_recl-2013WP-NS-import-200.out
CHNL# 49: [POWER190472 [BLLDNG2 19.000] [1]]
CHNL# 45: [POWER190456 [LEPRG1 26.000] [1]]
CHNL# 44: [POWER190450 [MACTG1 13.800] [1]]
CHNL# 42: [POWER126652 [RAV 3 22.000] [1]]
CHNL# 41: [POWER101063 [MYST G7 22.000] [1]]
CHNL# 40: [POWER100060 [MIS GT1 18.000] [1]]
TIME (SECONDS)
TUE, JAN 27 2009 15:54
"NE,NY,NB POWER"

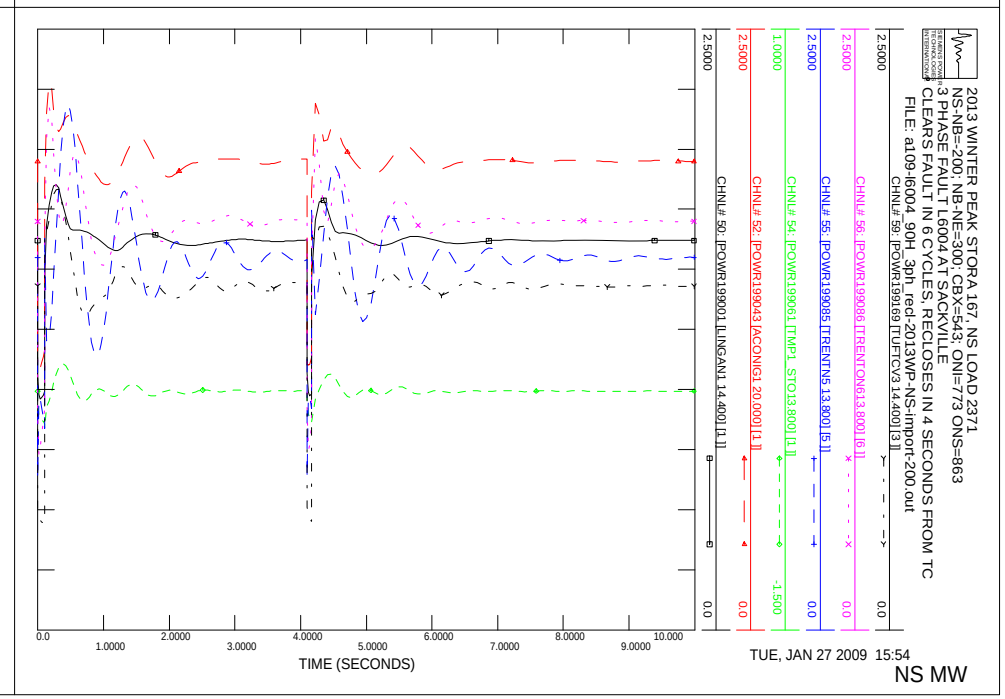
2013 WINTER PEAK STORA 167, NS LOAD 2371
NS-NB=-200; NB-NE=300; CBX=543; ONI=773 ONS=863
3 PHASE FAULT L6004 AT SACKVILLE
CLEARS FAULT IN 6 CYCLES, RECLOSES IN 4 SECONDS FROM TC
FILE: a109-l6004_90H_3ph_recl-2013WP-NS-import-200.out
CHNL# 59: [POWR199169 [TUFTCV3 14.400] [3]]
CHNL# 56: [POWR199086 [TRENTON613.800] [6]]
CHNL# 55: [POWR199085 [TRENTN5 13.800] [5]]
CHNL# 54: [POWR199061 [TMP1 STO13.800] [1]]
CHNL# 52: [POWR199043 [ACONIG1 20.000] [1]]
CHNL# 50: [POWR199001 [LINGAN1 14.400] [1]]
TIME (SECONDS)
TUE, JAN 27 2009 15:54
NS MW

NS WIND MV

NS WIND MW

"345KV VOLTAGE"

FREQUENCY HZ

2013 WINTER PEAK STORA 167, NS LOAD 2371
NS-NB=-200; NB-NE=300; CBX=543; ONI=773 ONS=863
3 PHASE FAULT L6004 AT SACKVILLE
CLEARS FAULT IN 6 CYCLES, RECLOSES IN 4 SECONDS FROM TC
FILE: a109-l6004_90H_3ph_recl-2013WP-NS-import-200.out
CHNL# 146: [VOLT199280 [TUSKET A138.00]]
CHNL# 145: [VOLT199193 [HHWAS 138.00]]
CHNL# 144: [VOLT199165 [TUFTCOVE138.00]]
CHNL# 143: [VOLT199138 [SPRNGHIL138.00]]
CHNL# 142: [VOLT199090 [SON-TREN138.00]]
CHNL# 141: [VOLT199051 [HASTINGS138.00]]
1.2000
0.70000
0.0
1.0000
2.0000
3.0000
4.0000
5.0000
6.0000
7.0000
8.0000
9.0000
10.000
TIME (SECONDS)
TUE, JAN 27 2009 15:54
138KV BUS VOLTS

2013 WINTER PEAK STORA 167, NS LOAD 2371
NS-NB=-200; NB-NE=300; CBX=543; ONI=773 ONS=863
3 PHASE FAULT L6004 AT SACKVILLE
CLEARS FAULT IN 6 CYCLES, RECLOSES IN 4 SECONDS FROM TC
FILE: a109-l6004_90H_3ph_recl-2013WP-NS-import-200.out
CHNL# 140: [VOLT199240 [BWATER A230.00]]
CHNL# 139: [VOLT199200 [BRUSHY 230.00]]
CHNL# 138: [VOLT199130 [ONSLOW 230.00]]
CHNL# 137: [VOLT199050 [HASTINGS230.00]]
CHNL# 136: [VOLT199044 [PT.ACONI230.00]]
CHNL# 135: [VOLT199000 [LINGAN 230.00]]
1.2000
0.70000
0.0
1.0000
2.0000
3.0000
4.0000
5.0000
6.0000
7.0000
8.0000
9.0000
10.000
TIME (SECONDS)
TUE, JAN 27 2009 15:54
230KV BUS VOLTS

2013 WINTER PEAK STORA 167, NS LOAD 2371
NS-NB=-200; NB-NE=300; CBX=543; ONI=773 ONS=863
3 PHASE FAULT L6004 AT SACKVILLE
CLEARS FAULT IN 6 CYCLES, RECLOSES IN 4 SECONDS FROM TC
FILE: a109-l6004_90H_3ph_recl-2013WP-NS-import-200.out
CHNL# 217: [L6513MW]
CHNL# 215: [L6503MW]
CHNL# 197: [L8003MW]
CHNL# 195: [L8004MW]
CHNL# 193: [L8001MW]
CHNL# 221: [L3001MW]
250.00
500.00
1000.0
0.0
-250.0
-1000.
0.0
1.0000
2.0000
3.0000
4.0000
5.0000
6.0000
7.0000
8.0000
9.0000
10.000
TIME (SECONDS)
TUE, JAN 27 2009 15:54
LINE FLOW MW

2013 WINTER PEAK STORA 167, NS LOAD 2371
NS-NB=-200; NB-NE=300; CBX=543; ONI=773 ONS=863
3 PHASE FAULT L6004 AT SACKVILLE
CLEARS FAULT IN 6 CYCLES, RECLOSES IN 4 SECONDS FROM TC
FILE: a109-l6004_90H_3ph_recl-2013WP-NS-import-200.out
CHNL# 154: [IR141-DIGBYH69.0 VOLTS]
CHNL# 153: [IR137-STATIG25.0 VOLTS]
CHNL# 152: [IR114-GLENDH138.0 VOLTS]
CHNL# 151: [IR84-DALHOHV230.0 VOLTS]
CHNL# 150: [IR82 NUTBHV69.0 VOLTS]
CHNL# 149: [IR45 AMHERTP138.0 VOLTS]
1.2000
0.70000
0.0
1.0000
2.0000
3.0000
4.0000
5.0000
6.0000
7.0000
8.0000
9.0000
10.000
TIME (SECONDS)
TUE, JAN 27 2009 15:54
WIND BUS VOLTS

2013 WINTER PEAK STORA 167, NS LOAD 2371
NS-NB=-200; NB-NE=300; CBX=543; ONI=773 ONS=863
3 PHASE FAULT L6523 AT STORA
CLEARS FAULT IN 6 CYCLES, RECLOSES IN 5 SECONDS FROM POT
FILE: a110-l6523_3ph_rec-2013WP-NS-import-200.out
CHNL# 119: [VARS IR141-DIGBY]
CHNL# 118: [VARS IR137-STATIA]
CHNL# 117: [VARS IR114-GLENDHU]
CHNL# 116: [VARS IR84-DALHOUSIE]
CHNL# 115: [VARS IR82_NUTTBY]
CHNL# 114: [VARS IR45_AMHERST]
TIME (SECONDS)
TUE, JAN 27 2009 15:54
NS WIND MV

2013 WINTER PEAK STORA 167, NS LOAD 2371
NS-NB=-200; NB-NE=300; CBX=543; ONI=773 ONS=863
3 PHASE FAULT L6523 AT STORA
CLEARS FAULT IN 6 CYCLES, RECLOSES IN 5 SECONDS FROM POT
FILE: a110-l6523_3ph_rec-2013WP-NS-import-200.out
CHNL# 79: [POWER IR141-DIGBY]
CHNL# 78: [POWER IR137-STATIA]
CHNL# 77: [POWER IR114-GLENDHU]
CHNL# 76: [POWER IR84-DALHOUSIE]
CHNL# 75: [POWER IR82_NUTTBY]
CHNL# 74: [POWER IR45_AMHERST]
TIME (SECONDS)
TUE, JAN 27 2009 15:54
NS WIND MW

2013 WINTER PEAK STORA 167, NS LOAD 2371
NS-NB=-200; NB-NE=300; CBX=543; ONI=773 ONS=863
3 PHASE FAULT L6523 AT STORA
CLEARS FAULT IN 6 CYCLES, RECLOSES IN 5 SECONDS FROM POT
FILE: a110-l6523_3ph_rec-2013WP-NS-import-200.out
CHNL# 133: [VOLT199125 IONSLOW 345.00]
CHNL# 132: [VOLT199120 [HOPEWELL 345.00]
CHNL# 131: [VOLT199045 [WOODBINE345.00]
CHNL# 130: [VOLT190320 [SALBRY 345.00]
CHNL# 128: [VOLT190004 [KESWICK 345.00]
CHNL# 127: [VOLT 70002 [ORRINGTN345.00]
TIME (SECONDS)
TUE, JAN 27 2009 15:54
"345KV VOLTAGE"

2013 WINTER PEAK STORA 167, NS LOAD 2371
NS-NB=-200; NB-NE=300; CBX=543; ONI=773 ONS=863
3 PHASE FAULT L6523 AT STORA
CLEARS FAULT IN 6 CYCLES, RECLOSES IN 5 SECONDS FROM POT
FILE: a110-l6523_3ph_rec-2013WP-NS-import-200.out
CHNL# 125: 60*(1+[FREQ199125 IONSLOW 345.00])
CHNL# 124: 60*(1+[FREQ199120 [HOPEWELL 345.00])
CHNL# 123: 60*(1+[FREQ199045 [WOODBINE345.00])
CHNL# 122: 60*(1+[FREQ190320 [SALBRY 345.00])
CHNL# 121: 60*(1+[FREQ190197 [C.COVE 345.00])
CHNL# 120: 60*(1+[FREQ 70002 [ORRINGTN345.00])
TIME (SECONDS)
TUE, JAN 27 2009 15:54
FREQUENCY HZ

2013 WINTER PEAK STORA 167, NS LOAD 2371
NS-NB=-200; NB-NE=300; CBX=543; ONI=773 ONS=863
3 PHASE FAULT L6523 AT STORA
CLEARS FAULT IN 6 CYCLES, RECLOSES IN 5 SECONDS FROM POT
FILE: a110-l6523_3ph_rect-2013WP-NS-import-200.out
CHNL# 146: [VOLT199280 [TUSKET A138.00]]
CHNL# 145: [VOLT199193 [HHWAS 138.00]]
CHNL# 144: [VOLT199165 [TUFTCOVE138.00]]
CHNL# 143: [VOLT199138 [SPRNGHILL138.00]]
CHNL# 142: [VOLT199090 [50N-TREN138.00]]
CHNL# 141: [VOLT199051 [HASTINGS138.00]]
1.2000
0.70000
0.0
1.0000
2.0000
3.0000
4.0000
5.0000
6.0000
7.0000
8.0000
9.0000
10.000
TIME (SECONDS)
TUE, JAN 27 2009 15:54
138KV BUS VOLTS

2013 WINTER PEAK STORA 167, NS LOAD 2371
NS-NB=-200; NB-NE=300; CBX=543; ONI=773 ONS=863
3 PHASE FAULT L6523 AT STORA
CLEARS FAULT IN 6 CYCLES, RECLOSES IN 5 SECONDS FROM POT
FILE: a110-l6523_3ph_rect-2013WP-NS-import-200.out
CHNL# 140: [VOLT199240 [BWATER A230.00]]
CHNL# 139: [VOLT199200 [BRUSHY 230.00]]
CHNL# 138: [VOLT199130 [ONSLOW 230.00]]
CHNL# 137: [VOLT199050 [HASTINGS230.00]]
CHNL# 136: [VOLT199044 [PT.ACONI230.00]]
CHNL# 135: [VOLT199000 [LINGAN 230.00]]
1.2000
0.70000
0.0
1.0000
2.0000
3.0000
4.0000
5.0000
6.0000
7.0000
8.0000
9.0000
10.000
TIME (SECONDS)
TUE, JAN 27 2009 15:54
230KV BUS VOLTS

2013 WINTER PEAK STORA 167, NS LOAD 2371
NS-NB=-200; NB-NE=300; CBX=543; ONI=773 ONS=863
3 PHASE FAULT L6523 AT STORA
CLEARS FAULT IN 6 CYCLES, RECLOSES IN 5 SECONDS FROM POT
FILE: a110-l6523_3ph_rect-2013WP-NS-import-200.out
CHNL# 217: [L6533MW]
CHNL# 215: [L6503MW]
CHNL# 197: [L8003MW]
CHNL# 195: [L8004MW]
CHNL# 193: [L8001MW]
CHNL# 221: [L3001MW]
250.00
500.00
1000.0
0.0
-250.0
-1000.
TIME (SECONDS)
TUE, JAN 27 2009 15:54
LINE FLOW MW

2013 WINTER PEAK STORA 167, NS LOAD 2371
NS-NB=-200; NB-NE=300; CBX=543; ONI=773 ONS=863
3 PHASE FAULT L6523 AT STORA
CLEARS FAULT IN 6 CYCLES, RECLOSES IN 5 SECONDS FROM POT
FILE: a110-l6523_3ph_rect-2013WP-NS-import-200.out
CHNL# 154: [IR141-DIGBYH69.0 VOLTS]
CHNL# 153: [IR137-STATIG25.0 VOLTS]
CHNL# 152: [IR114-GLENDH138.0 VOLTS]
CHNL# 151: [IR84-DALHOHV230.0 VOLTS]
CHNL# 150: [IR82_NUTBHV69.0 VOLTS]
CHNL# 149: [IR45_AMHERTP138.0 VOLTS]
1.2000
0.70000
0.0
1.0000
2.0000
3.0000
4.0000
5.0000
6.0000
7.0000
8.0000
9.0000
10.000
TIME (SECONDS)
TUE, JAN 27 2009 15:54
WIND BUS VOLTS

2013 WINTER PEAK STORA 167, NS LOAD 2371
NS-NB=-200; NB-NE=300; CBX=543; ONI=773 ONS=863
3 PHASE FAULT L5049 AT 91H-TUFTS COVE69KV
CLEARS FAULT IN 9 CYCLES, NO RECLOSE
FILE: a112-l5049_3ph_nrecl-2013WP-NS-import-200.out
CHNL# 20: [ANGL199169 [TUFTCV3 14.400] [3]] [ANGL156661 [DARL G1 22.000] [1]
CHNL# 17: [ANGL199086 [TRENTON613.800] [6]] [ANGL156661 [DARL G1 22.000] [1]
CHNL# 16: [ANGL199085 [TRENTN5 13.800] [5]] [ANGL156661 [DARL G1 22.000] [1]
CHNL# 15: [ANGL199061 [TMP1 STO13.800] [1]] [ANGL156661 [DARL G1 22.000] [1]
CHNL# 13: [ANGL199043 [ACONIG1 20.000] [1]] [ANGL156661 [DARL G1 22.000] [1]
CHNL# 11: [ANGL199001 [LINGAN1 14.400] [1]] [ANGL156661 [DARL G1 22.000] [1]
TUE, JAN 27 2009 15:54
TIME (SECONDS)
NS ANGLE

2013 WINTER PEAK STORA 167, NS LOAD 2371
NS-NB=-200; NB-NE=300; CBX=543; ONI=773 ONS=863
3 PHASE FAULT L5049 AT 91H-TUFTS COVE69KV
CLEARS FAULT IN 9 CYCLES, NO RECLOSE
FILE: a112-l5049_3ph_nrecl-2013WP-NS-import-200.out
CHNL# 10: [ANGL190472 [BLLDNG2 19.000] [1]] [ANGL156661 [DARL G1 22.000] [1]
CHNL# 6: [ANGL190456 [LEPRG1 26.000] [1]] [ANGL156661 [DARL G1 22.000] [1]
CHNL# 5: [ANGL190450 [MACTG1 13.800] [1]] [ANGL156661 [DARL G1 22.000] [1]
CHNL# 3: [ANGL126652 [RAV 3 22.000] [1]] [ANGL156661 [DARL G1 22.000] [1]
CHNL# 2: [ANGL101063 [MYST G7 22.000] [1]] [ANGL156661 [DARL G1 22.000] [1]
CHNL# 1: [ANGL100060 [MIS GT1 18.000] [1]] [ANGL156661 [DARL G1 22.000] [1]
TUE, JAN 27 2009 15:54
TIME (SECONDS)
"NE,NY,NB ANGLE"

2013 WINTER PEAK STORA 167, NS LOAD 2371
NS-NB=-200; NB-NE=300; CBX=543; ONI=773 ONS=863
3 PHASE FAULT L5049 AT 91H-TUFTS COVE69KV
CLEARS FAULT IN 9 CYCLES, NO RECLOSE
FILE: a112-l5049_3ph_nrecl-2013WP-NS-import-200.out
CHNL# 59: [POWER199169 [TUFTCV3 14.400] [3]]
CHNL# 56: [POWER199086 [TRENTON613.800] [6]]
CHNL# 55: [POWER199085 [TRENTN5 13.800] [5]]
CHNL# 54: [POWER199061 [TMP1 STO13.800] [1]]
CHNL# 52: [POWER199043 [ACONIG1 20.000] [1]]
CHNL# 50: [POWER199001 [LINGAN1 14.400] [1]]
TUE, JAN 27 2009 15:54
TIME (SECONDS)
NS MW

2013 WINTER PEAK STORA 167, NS LOAD 2371
NS-NB=-200; NB-NE=300; CBX=543; ONI=773 ONS=863
3 PHASE FAULT L5049 AT 91H-TUFTS COVE69KV
CLEARS FAULT IN 9 CYCLES, NO RECLOSE
FILE: a112-l5049_3ph_nrecl-2013WP-NS-import-200.out
CHNL# 49: [POWER190472 [BLLDNG2 19.000] [1]]
CHNL# 45: [POWER190456 [LEPRG1 26.000] [1]]
CHNL# 44: [POWER190450 [MACTG1 13.800] [1]]
CHNL# 42: [POWER126652 [RAV 3 22.000] [1]]
CHNL# 41: [POWER101063 [MYST G7 22.000] [1]]
CHNL# 40: [POWER100060 [MIS GT1 18.000] [1]]
TUE, JAN 27 2009 15:54
TIME (SECONDS)
"NE,NY,NB POWER"

NS WIND MV

NS WIND MW

"345KV VOLTAGE"

FREQUENCY HZ

2013 WINTER PEAK STORA 167, NS LOAD 2371
NS-NB=-200; NB-NE=300; CBX=543; ONI=773 ONS=863
3 PHASE FAULT L5049 AT 91H-TUFTS COVE69KV
CLEARS FAULT IN 9 CYCLES, NO RECLOSE
FILE: a112-I5049_3ph_nrecl-2013WP-NS-import-200.out
CHNL# 146: [VOLT199280 [TUSKET A138.00]]
CHNL# 145: [VOLT199193 [HHWAS 138.00]]
CHNL# 144: [VOLT199165 [TUFTCOVE138.00]]
CHNL# 143: [VOLT199138 [SPRNGHILL138.00]]
CHNL# 142: [VOLT199090 [50N-TREN138.00]]
CHNL# 141: [VOLT199051 [HASTINGS138.00]]
1.2000
0.70000
0.0
1.0000
2.0000
3.0000
4.0000
5.0000
6.0000
7.0000
8.0000
9.0000
10.000
TIME (SECONDS)
TUE, JAN 27 2009 15:54
138KV BUS VOLTS

2013 WINTER PEAK STORA 167, NS LOAD 2371
NS-NB=-200; NB-NE=300; CBX=543; ONI=773 ONS=863
3 PHASE FAULT L5049 AT 91H-TUFTS COVE69KV
CLEARS FAULT IN 9 CYCLES, NO RECLOSE
FILE: a112-I5049_3ph_nrecl-2013WP-NS-import-200.out
CHNL# 140: [VOLT199240 [BWATER A230.00]]
CHNL# 139: [VOLT199200 [BRUSHY 230.00]]
CHNL# 138: [VOLT199130 [ONSLOW 230.00]]
CHNL# 137: [VOLT199050 [HASTINGS230.00]]
CHNL# 136: [VOLT199044 [PT.ACONI230.00]]
CHNL# 135: [VOLT199000 [LINGAN 230.00]]
1.2000
0.70000
0.0
1.0000
2.0000
3.0000
4.0000
5.0000
6.0000
7.0000
8.0000
9.0000
10.000
TIME (SECONDS)
TUE, JAN 27 2009 15:54
230KV BUS VOLTS

2013 WINTER PEAK STORA 167, NS LOAD 2371
NS-NB=-200; NB-NE=300; CBX=543; ONI=773 ONS=863
3 PHASE FAULT L5049 AT 91H-TUFTS COVE69KV
CLEARS FAULT IN 9 CYCLES, NO RECLOSE
FILE: a112-I5049_3ph_nrecl-2013WP-NS-import-200.out
CHNL# 217: [L6513MW]
CHNL# 215: [L6503MW]
CHNL# 197: [L8003MW]
CHNL# 195: [L8004MW]
CHNL# 193: [L8001MW]
CHNL# 221: [L3001MW]
250.00
-250.0
500.00
0.0
1000.0
-1000.
TIME (SECONDS)
TUE, JAN 27 2009 15:54
LINE FLOW MW

2013 WINTER PEAK STORA 167, NS LOAD 2371
NS-NB=-200; NB-NE=300; CBX=543; ONI=773 ONS=863
3 PHASE FAULT L5049 AT 91H-TUFTS COVE69KV
CLEARS FAULT IN 9 CYCLES, NO RECLOSE
FILE: a112-I5049_3ph_nrecl-2013WP-NS-import-200.out
CHNL# 154: [IR141-DIGBYH69.0 VOLTS]
CHNL# 153: [IR137-STATIG25.0 VOLTS]
CHNL# 152: [IR114-GLENDH138.0 VOLTS]
CHNL# 151: [IR84-DALHOHV230.0 VOLTS]
CHNL# 150: [IR82 NUTBHV69.0 VOLTS]
CHNL# 149: [IR45 AMHERTP138.0 VOLTS]
1.2000
0.70000
0.0
1.0000
2.0000
3.0000
4.0000
5.0000
6.0000
7.0000
8.0000
9.0000
10.000
TIME (SECONDS)
TUE, JAN 27 2009 15:54
WIND BUS VOLTS

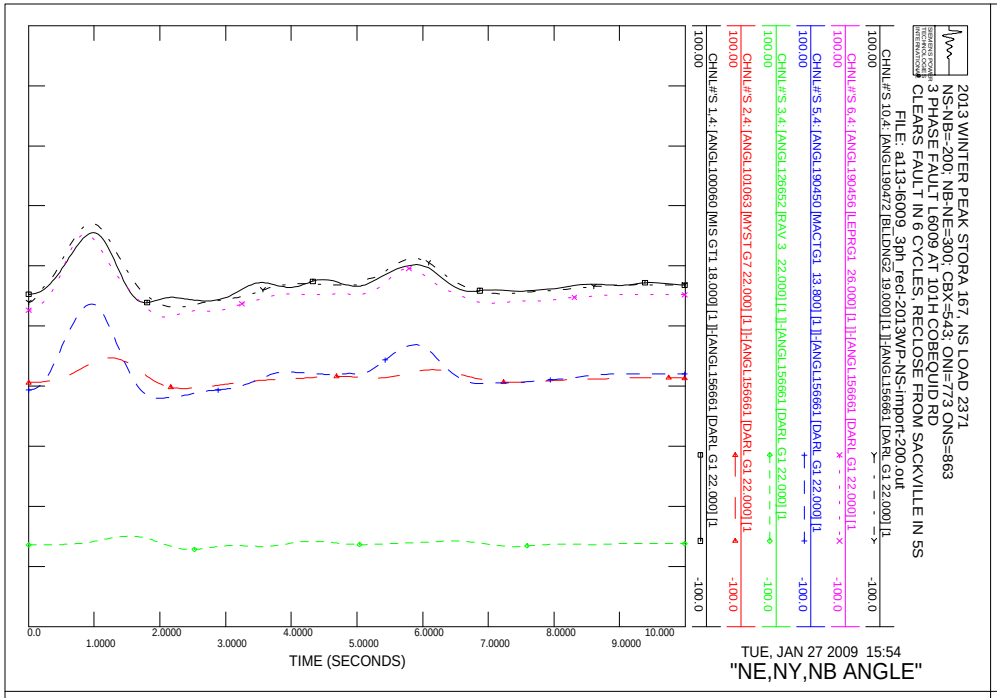
2013 WINTER PEAK STORA 167, NS LOAD 2371
NS-NB=-200; NB-NE=300; CBX=543; ONI=773 ONS=863
3 PHASE FAULT L6009 AT 101H COBEQUID RD
CLEARS FAULT IN 6 CYCLES, RECLOSE FROM SACKVILLE IN 5S
FILE: a113-l6009_3ph_rect-2013WP-NS-import-200.out
CHNL#'S 10,4: [ANGL190472 [BLLDNG2 19.000] [1]]-[ANGL156661 [DARL G1 22.000] [1
CHNL#'S 6,4: [ANGL190456 [LEPRG1 26.000] [1]]-[ANGL156661 [DARL G1 22.000] [1
CHNL#'S 5,4: [ANGL190450 [MACTG1 13.800] [1]]-[ANGL156661 [DARL G1 22.000] [1
CHNL#'S 3,4: [ANGL126652 [RAV 3 22.000] [1]]-[ANGL156661 [DARL G1 22.000] [1
CHNL#'S 2,4: [ANGL101063 [MYST G7 22.000] [1]]-[ANGL156661 [DARL G1 22.000] [1
CHNL#'S 1,4: [ANGL100060 [MIS GT1 18.000] [1]]-[ANGL156661 [DARL G1 22.000] [1
100.00
-100.0
0.0
1.0000
2.0000
3.0000
4.0000
5.0000
6.0000
7.0000
8.0000
9.0000
10.000
TIME (SECONDS)
TUE, JAN 27 2009 15:54
"NE,NY,NB ANGLE"

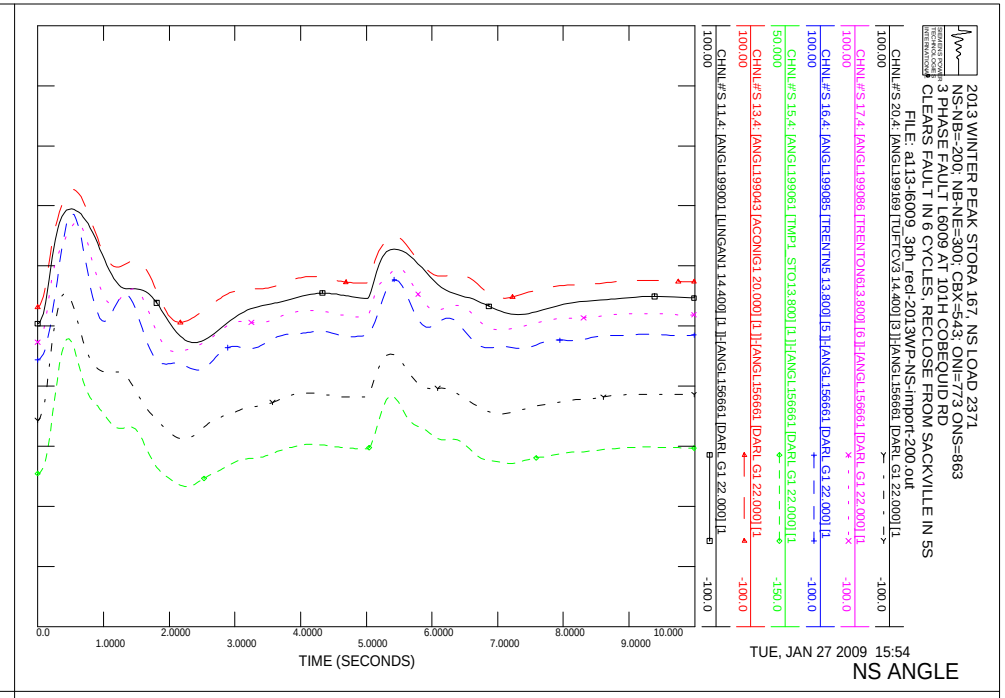
2013 WINTER PEAK STORA 167, NS LOAD 2371
NS-NB=-200; NB-NE=300; CBX=543; ONI=773 ONS=863
3 PHASE FAULT L6009 AT 101H COBEQUID RD
CLEARS FAULT IN 6 CYCLES, RECLOSE FROM SACKVILLE IN 5S
FILE: a113-l6009_3ph_rect-2013WP-NS-import-200.out
CHNL#'S 20,4: [ANGL199169 [TUFTCV3 14.400] [3]]-[ANGL156661 [DARL G1 22.000] [1
CHNL#'S 17,4: [ANGL199086 [TRENTON613.800] [6]]-[ANGL156661 [DARL G1 22.000] [1
CHNL#'S 16,4: [ANGL199085 [TRENTN5 13.800] [5]]-[ANGL156661 [DARL G1 22.000] [1
CHNL#'S 15,4: [ANGL199061 [TMP1 STO13.800] [1]]-[ANGL156661 [DARL G1 22.000] [1
CHNL#'S 13,4: [ANGL199043 [ACONIG1 20.000] [1]]-[ANGL156661 [DARL G1 22.000] [1
CHNL#'S 11,4: [ANGL199001 [LINGAN1 14.400] [1]]-[ANGL156661 [DARL G1 22.000] [1
100.00
-100.0
50.000
-150.0
0.0
1.0000
2.0000
3.0000
4.0000
5.0000
6.0000
7.0000
8.0000
9.0000
10.000
TIME (SECONDS)
TUE, JAN 27 2009 15:54
NS ANGLE

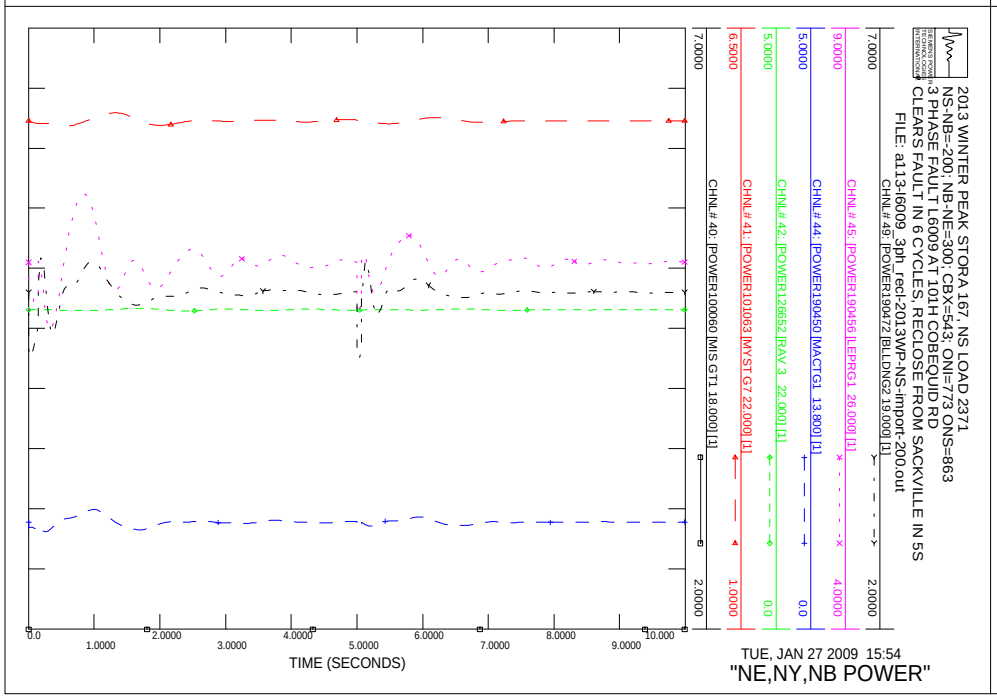
2013 WINTER PEAK STORA 167, NS LOAD 2371
NS-NB=-200; NB-NE=300; CBX=543; ONI=773 ONS=863
3 PHASE FAULT L6009 AT 101H COBEQUID RD
CLEARS FAULT IN 6 CYCLES, RECLOSE FROM SACKVILLE IN 5S
FILE: a113-l6009_3ph_rect-2013WP-NS-import-200.out
CHNL# 49: [POWER190472 [BLLDNG2 19.000] [1]
CHNL# 45: [POWER190456 [LEPRG1 26.000] [1]
CHNL# 44: [POWER190450 [MACTG1 13.800] [1]
CHNL# 42: [POWER126652 [RAV 3 22.000] [1]
CHNL# 41: [POWER101063 [MYST G7 22.000] [1]
CHNL# 40: [POWER100060 [MIS GT1 18.000] [1]
7.0000
2.0000
9.0000
4.0000
5.0000
0.0
6.5000
1.0000
0.0
1.0000
2.0000
3.0000
4.0000
5.0000
6.0000
7.0000
8.0000
9.0000
10.000
TIME (SECONDS)
TUE, JAN 27 2009 15:54
"NE,NY,NB POWER"

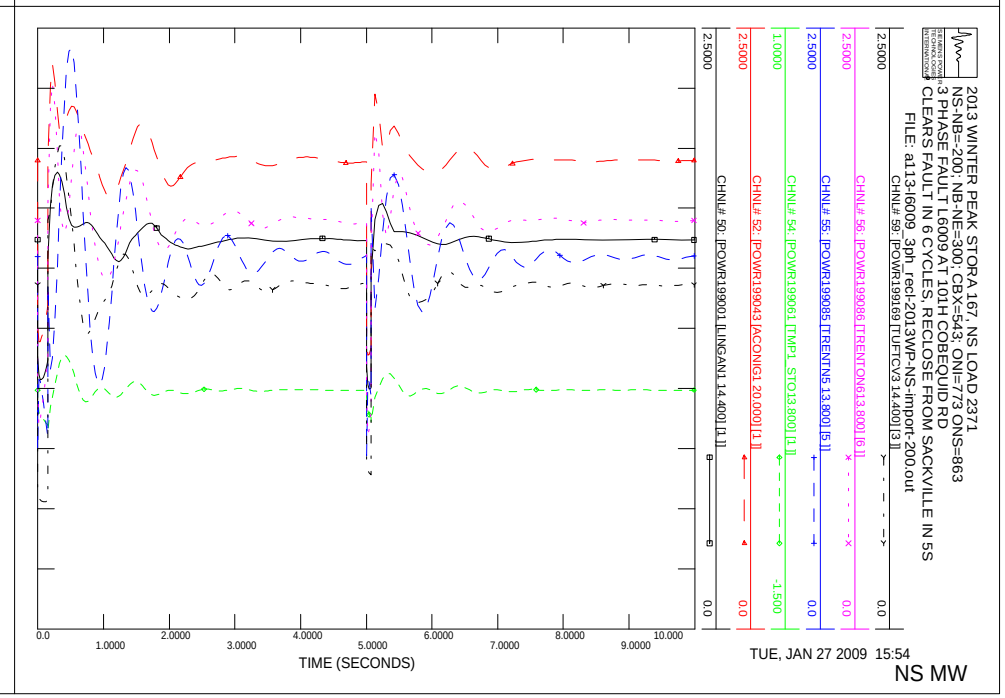
2013 WINTER PEAK STORA 167, NS LOAD 2371
NS-NB=-200; NB-NE=300; CBX=543; ONI=773 ONS=863
3 PHASE FAULT L6009 AT 101H COBEQUID RD
CLEARS FAULT IN 6 CYCLES, RECLOSE FROM SACKVILLE IN 5S
FILE: a113-l6009_3ph_rect-2013WP-NS-import-200.out
CHNL# 59: [POWR199169 [TUFTCV3 14.400] [3]]
CHNL# 56: [POWR199086 [TRENTON613.800] [6]]
CHNL# 55: [POWR199085 [TRENTN5 13.800] [5]]
CHNL# 54: [POWR199061 [TMP1 STO13.800] [1]]
CHNL# 52: [POWR199043 [ACONIG1 20.000] [1]]
CHNL# 50: [POWR199001 [LINGAN1 14.400] [1]]
2.5000
0.0
1.0000
-1.500
0.0
1.0000
2.0000
3.0000
4.0000
5.0000
6.0000
7.0000
8.0000
9.0000
10.000
TIME (SECONDS)
TUE, JAN 27 2009 15:54
NS MW

2013 WINTER PEAK STORA 167, NS LOAD 2371
NS-NB=-200; NB-NE=300; CBX=543; ONI=773 ONS=863
3 PHASE FAULT L6009 AT 101H COBEQUID RD
CLEARS FAULT IN 6 CYCLES, RECLOSE FROM SACKVILLE IN 5S
FILE: a113-l6009_3ph_rect-2013WP-NS-import-200.out
CHNL# 119: [VARS IR141-DIGBY]
CHNL# 118: [VARS IR137-STATIA]
CHNL# 117: [VARS IR114-GLENDHU]
CHNL# 116: [VARS IR84-DALHOUSIE]
CHNL# 115: [VARS IR82_NUTTBY]
CHNL# 114: [VARS IR45_AMHERST]
TIME (SECONDS)
TUE, JAN 27 2009 15:54
NS WIND MV

2013 WINTER PEAK STORA 167, NS LOAD 2371
NS-NB=-200; NB-NE=300; CBX=543; ONI=773 ONS=863
3 PHASE FAULT L6009 AT 101H COBEQUID RD
CLEARS FAULT IN 6 CYCLES, RECLOSE FROM SACKVILLE IN 5S
FILE: a113-l6009_3ph_rect-2013WP-NS-import-200.out
CHNL# 79: [POWER IR141-DIGBY]
CHNL# 78: [POWER IR137-STATIA]
CHNL# 77: [POWER IR114-GLENDHU]
CHNL# 76: [POWER IR84-DALHOUSIE]
CHNL# 75: [POWER IR82_NUTTBY]
CHNL# 74: [POWER IR45_AMHERST]
TIME (SECONDS)
TUE, JAN 27 2009 15:54
NS WIND MW

2013 WINTER PEAK STORA 167, NS LOAD 2371
NS-NB=-200; NB-NE=300; CBX=543; ONI=773 ONS=863
3 PHASE FAULT L6009 AT 101H COBEQUID RD
CLEARS FAULT IN 6 CYCLES, RECLOSE FROM SACKVILLE IN 5S
FILE: a113-l6009_3ph_rect-2013WP-NS-import-200.out
CHNL# 133: [VOLT199125 [ONSLOW 345.00]]
CHNL# 132: [VOLT199120 [HOPEWELL 345.00]]
CHNL# 131: [VOLT199045 [WOODBINE345.00]]
CHNL# 130: [VOLT190320 [SALBRY 345.00]]
CHNL# 128: [VOLT190004 [KESWICK 345.00]]
CHNL# 127: [VOLT 70002 [ORRINGTN345.00]]
TIME (SECONDS)
TUE, JAN 27 2009 15:54
"345KV VOLTAGE"

2013 WINTER PEAK STORA 167, NS LOAD 2371
NS-NB=-200; NB-NE=300; CBX=543; ONI=773 ONS=863
3 PHASE FAULT L6009 AT 101H COBEQUID RD
CLEARS FAULT IN 6 CYCLES, RECLOSE FROM SACKVILLE IN 5S
FILE: a113-l6009_3ph_rect-2013WP-NS-import-200.out
CHNL# 125: 60*(1+[FREQ199125 [ONSLOW 345.00]])
CHNL# 124: 60*(1+[FREQ199120 [HOPEWELL 345.00]])
CHNL# 123: 60*(1+[FREQ199045 [WOODBINE345.00]])
CHNL# 122: 60*(1+[FREQ190320 [SALBRY 345.00]])
CHNL# 121: 60*(1+[FREQ190197 [C.COVE 345.00]])
CHNL# 120: 60*(1+[FREQ 70002 [ORRINGTN345.00]])
TIME (SECONDS)
TUE, JAN 27 2009 15:54
FREQUENCY HZ

2013 WINTER PEAK STORA 167, NS LOAD 2371
NS-NB=-200; NB-NE=300; CBX=543; ONI=773 ONS=863
3 PHASE FAULT L6009 AT 101H COBEQUID RD
CLEARS FAULT IN 6 CYCLES, RECLOSE FROM SACKVILLE IN 5S
FILE: a113-l6009_3ph_rect-2013WP-NS-import-200.out
CHNL# 146: [VOLT199280 [TUSKET A138.00]]
CHNL# 145: [VOLT199193 [HHWAS 138.00]]
CHNL# 144: [VOLT199165 [TUFTCOVE138.00]]
CHNL# 143: [VOLT199135 [SPRNGHILL138.00]]
CHNL# 142: [VOLT199090 [SON-TREN138.00]]
CHNL# 141: [VOLT199051 [HASTINGS138.00]]
1.2000
0.70000
0.0
1.0000
2.0000
3.0000
4.0000
5.0000
6.0000
7.0000
8.0000
9.0000
10.000
TIME (SECONDS)
TUE, JAN 27 2009 15:54
138KV BUS VOLTS

2013 WINTER PEAK STORA 167, NS LOAD 2371
NS-NB=-200; NB-NE=300; CBX=543; ONI=773 ONS=863
3 PHASE FAULT L6009 AT 101H COBEQUID RD
CLEARS FAULT IN 6 CYCLES, RECLOSE FROM SACKVILLE IN 5S
FILE: a113-l6009_3ph_rect-2013WP-NS-import-200.out
CHNL# 140: [VOLT199240 [BWATER A230.00]]
CHNL# 139: [VOLT199200 [BRUSHY 230.00]]
CHNL# 138: [VOLT199130 [ONSLOW 230.00]]
CHNL# 137: [VOLT199050 [HASTINGS230.00]]
CHNL# 136: [VOLT199044 [PT.ACONI230.00]]
CHNL# 135: [VOLT199000 [LINGAN 230.00]]
1.2000
0.70000
0.0
1.0000
2.0000
3.0000
4.0000
5.0000
6.0000
7.0000
8.0000
9.0000
10.000
TIME (SECONDS)
TUE, JAN 27 2009 15:54
230KV BUS VOLTS

2013 WINTER PEAK STORA 167, NS LOAD 2371
NS-NB=-200; NB-NE=300; CBX=543; ONI=773 ONS=863
3 PHASE FAULT L6009 AT 101H COBEQUID RD
CLEARS FAULT IN 6 CYCLES, RECLOSE FROM SACKVILLE IN 5S
FILE: a113-l6009_3ph_rect-2013WP-NS-import-200.out
CHNL# 217: [L6533MW]
CHNL# 215: [L6503MW]
CHNL# 197: [L8003MW]
CHNL# 195: [L8004MW]
CHNL# 193: [L8001MW]
CHNL# 221: [L3001MW]
250.00
500.00
1000.0
0.0
-250.0
-1000.
0.0
1.0000
2.0000
3.0000
4.0000
5.0000
6.0000
7.0000
8.0000
9.0000
10.000
TIME (SECONDS)
TUE, JAN 27 2009 15:54
LINE FLOW MW

2013 WINTER PEAK STORA 167, NS LOAD 2371
NS-NB=-200; NB-NE=300; CBX=543; ONI=773 ONS=863
3 PHASE FAULT L6009 AT 101H COBEQUID RD
CLEARS FAULT IN 6 CYCLES, RECLOSE FROM SACKVILLE IN 5S
FILE: a113-l6009_3ph_rect-2013WP-NS-import-200.out
CHNL# 154: [IR141-DIGBYH69.0 VOLTS]
CHNL# 153: [IR137-STATIG25.0 VOLTS]
CHNL# 152: [IR114-GLENDH138.0 VOLTS]
CHNL# 151: [IR84-DALHOHV230.0 VOLTS]
CHNL# 150: [IR32_NUTBHV69.0 VOLTS]
CHNL# 149: [IR45_AMHERTP138.0 VOLTS]
1.2000
0.70000
0.0
1.0000
2.0000
3.0000
4.0000
5.0000
6.0000
7.0000
8.0000
9.0000
10.000
TIME (SECONDS)
TUE, JAN 27 2009 15:54
WIND BUS VOLTS

2013 WINTER PEAK STORA 167, NS LOAD 2371
NS-NB=-200; NB-NE=300; CBX=543; ONI=773 ONS=863
3 PHASE FAULT ON HASTINGS 138KV BUS B61
CLEARED IN 6 CYCLES
FILE: a114-b61_3ph_2C_nrecl-2013WP-NS-import-200.out
CHNL#S 20:4 [ANGL199169 [TUFTCV3 14.400] [3]] [ANGL156661 [DARL G1 22.000] [1
CHNL#S 17:4 [ANGL199086 [TRENTON613.800] [6]] [ANGL156661 [DARL G1 22.000] [1
CHNL#S 16:4 [ANGL199085 [TRENTN5 13.800] [5]] [ANGL156661 [DARL G1 22.000] [1
CHNL#S 15:4 [ANGL199061 [TMP1 STO13.800] [1]] [ANGL156661 [DARL G1 22.000] [1
CHNL#S 13:4 [ANGL199043 [ACONIG1 20.000] [1]] [ANGL156661 [DARL G1 22.000] [1
CHNL#S 11:4 [ANGL199001 [LINGAN1 14.400] [1]] [ANGL156661 [DARL G1 22.000] [1
TIME (SECONDS)
TUE, JAN 27 2009 15:54
NS ANGLE

2013 WINTER PEAK STORA 167, NS LOAD 2371
NS-NB=-200; NB-NE=300; CBX=543; ONI=773 ONS=863
3 PHASE FAULT ON HASTINGS 138KV BUS B61
CLEARED IN 6 CYCLES
FILE: a114-b61_3ph_2C_nrecl-2013WP-NS-import-200.out
CHNL#S 10:4 [ANGL190472 [BLLDNG2 19.000] [1]] [ANGL156661 [DARL G1 22.000] [1
CHNL#S 6:4 [ANGL190456 [LEPRG1 26.000] [1]] [ANGL156661 [DARL G1 22.000] [1
CHNL#S 5:4 [ANGL190450 [MACTG1 13.800] [1]] [ANGL156661 [DARL G1 22.000] [1
CHNL#S 3:4 [ANGL126652 [RAV 3 22.000] [1]] [ANGL156661 [DARL G1 22.000] [1
CHNL#S 2:4 [ANGL101063 [MYST G7 22.000] [1]] [ANGL156661 [DARL G1 22.000] [1
CHNL#S 1:4 [ANGL100060 [MIS GT1 18.000] [1]] [ANGL156661 [DARL G1 22.000] [1
TIME (SECONDS)
TUE, JAN 27 2009 15:54
"NE,NY,NB ANGLE"

2013 WINTER PEAK STORA 167, NS LOAD 2371
NS-NB=-200; NB-NE=300; CBX=543; ONI=773 ONS=863
3 PHASE FAULT ON HASTINGS 138KV BUS B61
CLEARED IN 6 CYCLES
FILE: a114-b61_3ph_2C_nrecl-2013WP-NS-import-200.out
CHNL# 59: [POWR199169 [TUFTCV3 14.400] [3]]
CHNL# 56: [POWR199086 [TRENTON613.800] [6]]
CHNL# 55: [POWR199085 [TRENTN5 13.800] [5]]
CHNL# 54: [POWR199061 [TMP1 STO13.800] [1]]
CHNL# 52: [POWR199043 [ACONIG1 20.000] [1]]
CHNL# 50: [POWR199001 [LINGAN1 14.400] [1]]
TIME (SECONDS)
TUE, JAN 27 2009 15:54
NS MW

2013 WINTER PEAK STORA 167, NS LOAD 2371
NS-NB=-200; NB-NE=300; CBX=543; ONI=773 ONS=863
3 PHASE FAULT ON HASTINGS 138KV BUS B61
CLEARED IN 6 CYCLES
FILE: a114-b61_3ph_2C_nrecl-2013WP-NS-import-200.out
CHNL# 49: [POWER190472 [BLLDNG2 19.000] [1]]
CHNL# 45: [POWER190456 [LEPRG1 26.000] [1]]
CHNL# 44: [POWER190450 [MACTG1 13.800] [1]]
CHNL# 42: [POWER126652 [RAV 3 22.000] [1]]
CHNL# 41: [POWER101063 [MYST G7 22.000] [1]]
CHNL# 40: [POWER100060 [MIS GT1 18.000] [1]]
TIME (SECONDS)
TUE, JAN 27 2009 15:54
"NE,NY,NB POWER"

2013 WINTER PEAK STORA 167, NS LOAD 2371
NS-NB=-200; NB-NE=300; CBX=543; ONI=773 ONS=863
3 PHASE FAULT ON HASTINGS 138KV BUS B61
CLEARED IN 6 CYCLES
FILE: a114-b61_3ph_2C_nrecl-2013WP-NS-import-200.out
CHNL# 119: [VARS IR141-DIGBY]
CHNL# 118: [VARS IR137-STATIA]
CHNL# 117: [VARS IR114-GLENDHU]
CHNL# 116: [VARS IR84-DALHOUSIE]
CHNL# 115: [VARS IR82_NUTTBY]
CHNL# 114: [VARS IR45_AMHERST]
TIME (SECONDS)
TUE, JAN 27 2009 15:54
NS WIND MV

2013 WINTER PEAK STORA 167, NS LOAD 2371
NS-NB=-200; NB-NE=300; CBX=543; ONI=773 ONS=863
3 PHASE FAULT ON HASTINGS 138KV BUS B61
CLEARED IN 6 CYCLES
FILE: a114-b61_3ph_2C_nrecl-2013WP-NS-import-200.out
CHNL# 79: [POWER IR141-DIGBY]
CHNL# 78: [POWER IR137-STATIA]
CHNL# 77: [POWER IR114-GLENDHU]
CHNL# 76: [POWER IR84-DALHOUSIE]
CHNL# 75: [POWER IR82_NUTTBY]
CHNL# 74: [POWER IR45_AMHERST]
TIME (SECONDS)
TUE, JAN 27 2009 15:54
NS WIND MW

2013 WINTER PEAK STORA 167, NS LOAD 2371
NS-NB=-200; NB-NE=300; CBX=543; ONI=773 ONS=863
3 PHASE FAULT ON HASTINGS 138KV BUS B61
CLEARED IN 6 CYCLES
FILE: a114-b61_3ph_2C_nrecl-2013WP-NS-import-200.out
CHNL# 133: [VOLT199125 [ONSLOW 345.00]]
CHNL# 132: [VOLT199120 [HOPEWELL 345.00]]
CHNL# 131: [VOLT199045 [WOODBINE345.00]]
CHNL# 130: [VOLT190320 [SALBRY 345.00]]
CHNL# 128: [VOLT190004 [KESWICK 345.00]]
CHNL# 127: [VOLT 70002 [ORRINGTN345.00]]
TIME (SECONDS)
TUE, JAN 27 2009 15:54
"345KV VOLTAGE"

2013 WINTER PEAK STORA 167, NS LOAD 2371
NS-NB=-200; NB-NE=300; CBX=543; ONI=773 ONS=863
3 PHASE FAULT ON HASTINGS 138KV BUS B61
CLEARED IN 6 CYCLES
FILE: a114-b61_3ph_2C_nrecl-2013WP-NS-import-200.out
CHNL# 125: 60*(1+[FREQ199125 [ONSLOW 345.00]])
CHNL# 124: 60*(1+[FREQ199120 [HOPEWELL 345.00]])
CHNL# 123: 60*(1+[FREQ199045 [WOODBINE345.00]])
CHNL# 122: 60*(1+[FREQ190320 [SALBRY 345.00]])
CHNL# 121: 60*(1+[FREQ190197 [C.COVE 345.00]])
CHNL# 120: 60*(1+[FREQ 70002 [ORRINGTN345.00]])
TIME (SECONDS)
TUE, JAN 27 2009 15:54
FREQUENCY HZ

2013 WINTER PEAK STORA 167, NS LOAD 2371
NS-NB=-200; NB-NE=300; CBX=543; ONI=773 ONS=863
3 PHASE FAULT ON HASTINGS 138KV BUS B61
CLEARED IN 6 CYCLES
FILE: a114-b61_3ph_2C_nrecl-2013WP-NS-import-200.out
CHNL# 146: [VOLT199280 [TUSKET A138.00]]
CHNL# 145: [VOLT199193 [HHWAS 138.00]]
CHNL# 144: [VOLT199165 [TUFTCOVE138.00]]
CHNL# 143: [VOLT199138 [SPRNGHIL138.00]]
CHNL# 142: [VOLT199090 [SON-TREN138.00]]
CHNL# 141: [VOLT199051 [HASTINGS138.00]]
1.2000
0.70000
0.0
1.0000
2.0000
3.0000
4.0000
5.0000
6.0000
7.0000
8.0000
9.0000
10.000
TIME (SECONDS)
TUE, JAN 27 2009 15:54
138KV BUS VOLTS

2013 WINTER PEAK STORA 167, NS LOAD 2371
NS-NB=-200; NB-NE=300; CBX=543; ONI=773 ONS=863
3 PHASE FAULT ON HASTINGS 138KV BUS B61
CLEARED IN 6 CYCLES
FILE: a114-b61_3ph_2C_nrecl-2013WP-NS-import-200.out
CHNL# 140: [VOLT199240 [BWATER A230.00]]
CHNL# 139: [VOLT199200 [BRUSHY 230.00]]
CHNL# 138: [VOLT199130 [ONSLOW 230.00]]
CHNL# 137: [VOLT199050 [HASTINGS230.00]]
CHNL# 136: [VOLT199044 [PT.ACONI230.00]]
CHNL# 135: [VOLT199000 [LINGAN 230.00]]
1.2000
0.70000
0.0
1.0000
2.0000
3.0000
4.0000
5.0000
6.0000
7.0000
8.0000
9.0000
10.000
TIME (SECONDS)
TUE, JAN 27 2009 15:54
230KV BUS VOLTS

2013 WINTER PEAK STORA 167, NS LOAD 2371
NS-NB=-200; NB-NE=300; CBX=543; ONI=773 ONS=863
3 PHASE FAULT ON HASTINGS 138KV BUS B61
CLEARED IN 6 CYCLES
FILE: a114-b61_3ph_2C_nrecl-2013WP-NS-import-200.out
CHNL# 217: [L6513MW]
CHNL# 215: [L6503MW]
CHNL# 197: [L8003MW]
CHNL# 195: [L8004MW]
CHNL# 193: [L8001MW]
CHNL# 221: [L3001MW]
250.00
-250.0
500.00
0.0
1000.0
-1000.
TIME (SECONDS)
TUE, JAN 27 2009 15:54
LINE FLOW MW

2013 WINTER PEAK STORA 167, NS LOAD 2371
NS-NB=-200; NB-NE=300; CBX=543; ONI=773 ONS=863
3 PHASE FAULT ON HASTINGS 138KV BUS B61
CLEARED IN 6 CYCLES
FILE: a114-b61_3ph_2C_nrecl-2013WP-NS-import-200.out
CHNL# 154: [IR141-DIGBYH69.0 VOLTS]
CHNL# 153: [IR137-STATIG25.0 VOLTS]
CHNL# 152: [IR114-GLENDH138.0 VOLTS]
CHNL# 151: [IR84-DALHOHV230.0 VOLTS]
CHNL# 150: [IR82_NUTBHV69.0 VOLTS]
CHNL# 149: [IR45_AMHERTP138.0 VOLTS]
1.2000
0.70000
0.0
1.0000
2.0000
3.0000
4.0000
5.0000
6.0000
7.0000
8.0000
9.0000
10.000
TIME (SECONDS)
TUE, JAN 27 2009 15:54
WIND BUS VOLTS

2013 WINTER PEAK STORA 167, NS LOAD 2371
NS-NB=-200; NB-NE=300; CBX=543; ONI=773 ONS=863
3 PHASE FAULT ON HASTINGS 138KV BUS B62
CLEARED IN 6 CYCLES
FILE: a115-b62_3ph_2C_nrecl-2013WP-NS-import-200.out
CHNL#S 20:4 [ANGL199169 [TUFTCV3 14.400] [3]] [ANGL156661 [DARL G1 22.000] [1
CHNL#S 17:4 [ANGL199086 [TRENTON613.800] [6]] [ANGL156661 [DARL G1 22.000] [1
CHNL#S 16:4 [ANGL199085 [TRENTN5 13.800] [5]] [ANGL156661 [DARL G1 22.000] [1
CHNL#S 15:4 [ANGL199061 [TMP1 STO13.800] [1]] [ANGL156661 [DARL G1 22.000] [1
CHNL#S 13:4 [ANGL199043 [ACONIG1 20.000] [1]] [ANGL156661 [DARL G1 22.000] [1
CHNL#S 11:4 [ANGL199001 [LINGAN1 14.400] [1]] [ANGL156661 [DARL G1 22.000] [1
TIME (SECONDS)
TUE, JAN 27 2009 15:54
NS ANGLE

2013 WINTER PEAK STORA 167, NS LOAD 2371
NS-NB=-200; NB-NE=300; CBX=543; ONI=773 ONS=863
3 PHASE FAULT ON HASTINGS 138KV BUS B62
CLEARED IN 6 CYCLES
FILE: a115-b62_3ph_2C_nrecl-2013WP-NS-import-200.out
CHNL#S 10:4 [ANGL190472 [BLLDNG2 19.000] [1]] [ANGL156661 [DARL G1 22.000] [1
CHNL#S 6:4 [ANGL190456 [LEPRG1 26.000] [1]] [ANGL156661 [DARL G1 22.000] [1
CHNL#S 5:4 [ANGL190450 [MACTG1 13.800] [1]] [ANGL156661 [DARL G1 22.000] [1
CHNL#S 3:4 [ANGL126652 [RAV 3 22.000] [1]] [ANGL156661 [DARL G1 22.000] [1
CHNL#S 2:4 [ANGL101063 [MYST G7 22.000] [1]] [ANGL156661 [DARL G1 22.000] [1
CHNL#S 1:4 [ANGL100060 [MIS GT1 18.000] [1]] [ANGL156661 [DARL G1 22.000] [1
TIME (SECONDS)
TUE, JAN 27 2009 15:54
"NE,NY,NB ANGLE"

2013 WINTER PEAK STORA 167, NS LOAD 2371
NS-NB=-200; NB-NE=300; CBX=543; ONI=773 ONS=863
3 PHASE FAULT ON HASTINGS 138KV BUS B62
CLEARED IN 6 CYCLES
FILE: a115-b62_3ph_2C_nrecl-2013WP-NS-import-200.out
CHNL# 59: [POWER199169 [TUFTCV3 14.400] [3]]
CHNL# 56: [POWER199086 [TRENTON613.800] [6]]
CHNL# 55: [POWER199085 [TRENTN5 13.800] [5]]
CHNL# 54: [POWER199061 [TMP1 STO13.800] [1]]
CHNL# 52: [POWER199043 [ACONIG1 20.000] [1]]
CHNL# 50: [POWER199001 [LINGAN1 14.400] [1]]
TIME (SECONDS)
TUE, JAN 27 2009 15:54
NS MW

2013 WINTER PEAK STORA 167, NS LOAD 2371
NS-NB=-200; NB-NE=300; CBX=543; ONI=773 ONS=863
3 PHASE FAULT ON HASTINGS 138KV BUS B62
CLEARED IN 6 CYCLES
FILE: a115-b62_3ph_2C_nrecl-2013WP-NS-import-200.out
CHNL# 49: [POWER190472 [BLLDNG2 19.000] [1]]
CHNL# 45: [POWER190456 [LEPRG1 26.000] [1]]
CHNL# 44: [POWER190450 [MACTG1 13.800] [1]]
CHNL# 42: [POWER126652 [RAV 3 22.000] [1]]
CHNL# 41: [POWER101063 [MYST G7 22.000] [1]]
CHNL# 40: [POWER100060 [MIS GT1 18.000] [1]]
TIME (SECONDS)
TUE, JAN 27 2009 15:54
"NE,NY,NB POWER"

2013 WINTER PEAK STORA 167, NS LOAD 2371
NS-NB=-200; NB-NE=300; CBX=543; ONI=773 ONS=863
3 PHASE FAULT ON HASTINGS 138KV BUS B62
CLEARED IN 6 CYCLES
FILE: a115-b62_3ph_2C_nrec1-2013WP-NS-import-200.out
CHNL# 119: [VARS IR141-DIGBY]
CHNL# 118: [VARS IR137-STATIA]
CHNL# 117: [VARS IR114-GLENDHU]
CHNL# 116: [VARS IR84-DALHOUSIE]
CHNL# 115: [VARS IR82_NUTTBY]
CHNL# 114: [VARS IR45_AMHERST]
TIME (SECONDS)
TUE, JAN 27 2009 15:54
NS WIND MV

2013 WINTER PEAK STORA 167, NS LOAD 2371
NS-NB=-200; NB-NE=300; CBX=543; ONI=773 ONS=863
3 PHASE FAULT ON HASTINGS 138KV BUS B62
CLEARED IN 6 CYCLES
FILE: a115-b62_3ph_2C_nrec1-2013WP-NS-import-200.out
CHNL# 79: [POWER IR141-DIGBY]
CHNL# 78: [POWER IR137-STATIA]
CHNL# 77: [POWER IR114-GLENDHU]
CHNL# 76: [POWER IR84-DALHOUSIE]
CHNL# 75: [POWER IR82_NUTTBY]
CHNL# 74: [POWER IR45_AMHERST]
TIME (SECONDS)
TUE, JAN 27 2009 15:54
NS WIND MW

2013 WINTER PEAK STORA 167, NS LOAD 2371
NS-NB=-200; NB-NE=300; CBX=543; ONI=773 ONS=863
3 PHASE FAULT ON HASTINGS 138KV BUS B62
CLEARED IN 6 CYCLES
FILE: a115-b62_3ph_2C_nrec1-2013WP-NS-import-200.out
CHNL# 133: [VOLT199125 [ONSLOW 345.00]]
CHNL# 132: [VOLT199120 [HOPEWELL 345.00]]
CHNL# 131: [VOLT199045 [WOODBINE345.00]]
CHNL# 130: [VOLT190320 [SALBRY 345.00]]
CHNL# 128: [VOLT190004 [KESWICK 345.00]]
CHNL# 127: [VOLT 70002 [ORRINGTN345.00]]
TIME (SECONDS)
TUE, JAN 27 2009 15:54
"345KV VOLTAGE"

2013 WINTER PEAK STORA 167, NS LOAD 2371
NS-NB=-200; NB-NE=300; CBX=543; ONI=773 ONS=863
3 PHASE FAULT ON HASTINGS 138KV BUS B62
CLEARED IN 6 CYCLES
FILE: a115-b62_3ph_2C_nrec1-2013WP-NS-import-200.out
CHNL# 125: 60*(1+[FREQ199125 [ONSLOW 345.00]])
CHNL# 124: 60*(1+[FREQ199120 [HOPEWELL 345.00]])
CHNL# 123: 60*(1+[FREQ199045 [WOODBINE345.00]])
CHNL# 122: 60*(1+[FREQ190320 [SALBRY 345.00]])
CHNL# 121: 60*(1+[FREQ190197 [C.COVE 345.00]])
CHNL# 120: 60*(1+[FREQ 70002 [ORRINGTN345.00]])
TIME (SECONDS)
TUE, JAN 27 2009 15:54
FREQUENCY HZ

2013 WINTER PEAK STORA 167, NS LOAD 2371
NS-NB=-200; NB-NE=300; CBX=543; ONI=773 ONS=863
3 PHASE FAULT ON HASTINGS 138KV BUS B62
CLEARED IN 6 CYCLES
FILE: a115-b62_3ph_2C_nrecl-2013WP-NS-import-200.out
CHNL# 146: [VOLT199280 [TUSKET A138.00]]
CHNL# 145: [VOLT199193 [HHWAS 138.00]]
CHNL# 144: [VOLT199165 [TUFTCOVE138.00]]
CHNL# 143: [VOLT199138 [SPRNGHIL138.00]]
CHNL# 142: [VOLT199090 [SON-TREN138.00]]
CHNL# 141: [VOLT199051 [HASTINGS138.00]]
1.2000
0.70000
0.0
1.0000
2.0000
3.0000
4.0000
5.0000
6.0000
7.0000
8.0000
9.0000
10.000
TIME (SECONDS)
TUE, JAN 27 2009 15:54
138KV BUS VOLTS

2013 WINTER PEAK STORA 167, NS LOAD 2371
NS-NB=-200; NB-NE=300; CBX=543; ONI=773 ONS=863
3 PHASE FAULT ON HASTINGS 138KV BUS B62
CLEARED IN 6 CYCLES
FILE: a115-b62_3ph_2C_nrecl-2013WP-NS-import-200.out
CHNL# 140: [VOLT199240 [BWATER A230.00]]
CHNL# 139: [VOLT199200 [BRUSHY 230.00]]
CHNL# 138: [VOLT199130 [ONSLOW 230.00]]
CHNL# 137: [VOLT199050 [HASTINGS230.00]]
CHNL# 136: [VOLT199044 [PT.ACONI230.00]]
CHNL# 135: [VOLT199000 [LINGAN 230.00]]
1.2000
0.70000
0.0
1.0000
2.0000
3.0000
4.0000
5.0000
6.0000
7.0000
8.0000
9.0000
10.000
TIME (SECONDS)
TUE, JAN 27 2009 15:54
230KV BUS VOLTS

2013 WINTER PEAK STORA 167, NS LOAD 2371
NS-NB=-200; NB-NE=300; CBX=543; ONI=773 ONS=863
3 PHASE FAULT ON HASTINGS 138KV BUS B62
CLEARED IN 6 CYCLES
FILE: a115-b62_3ph_2C_nrecl-2013WP-NS-import-200.out
CHNL# 217: [L6533MW]
CHNL# 215: [L6503MW]
CHNL# 197: [L8003MW]
CHNL# 195: [L8004MW]
CHNL# 193: [L8001MW]
CHNL# 221: [L3001MW]
250.00
-250.0
500.00
0.0
1000.0
-1000.
0.0
1.0000
2.0000
3.0000
4.0000
5.0000
6.0000
7.0000
8.0000
9.0000
10.000
TIME (SECONDS)
TUE, JAN 27 2009 15:54
LINE FLOW MW

2013 WINTER PEAK STORA 167, NS LOAD 2371
NS-NB=-200; NB-NE=300; CBX=543; ONI=773 ONS=863
3 PHASE FAULT ON HASTINGS 138KV BUS B62
CLEARED IN 6 CYCLES
FILE: a115-b62_3ph_2C_nrecl-2013WP-NS-import-200.out
CHNL# 154: [IR141-DIGBYH69.0 VOLTS]
CHNL# 153: [IR137-STATIG25.0 VOLTS]
CHNL# 152: [IR114-GLENDH138.0 VOLTS]
CHNL# 151: [IR84-DALHOHV230.0 VOLTS]
CHNL# 150: [IR82_NUTBHV69.0 VOLTS]
CHNL# 149: [IR45_AMHERTP138.0 VOLTS]
1.2000
0.70000
0.0
1.0000
2.0000
3.0000
4.0000
5.0000
6.0000
7.0000
8.0000
9.0000
10.000
TIME (SECONDS)
TUE, JAN 27 2009 15:54
WIND BUS VOLTS

2013 WINTER PEAK STORA 167, NS LOAD 2371
NS-NB=-200; NB-NE=300; CBX=543; ONI=773 ONS=863
3 PHASE FAULT ON L6014 AT TUFT'S COVE
CLEARED IN 6 CYCLES RECLOSING ATTEMPT FROM 91H IN 10 SEC
FILE: a116-l6014_91H_3ph_recl-2013WP-NS-import-200.out
CHNL# 20: [ANGL199169 [TUFTCV3 14.400] [3]] [ANGL156661 [DARL G1 22.000] [1]
CHNL# 17: [ANGL199086 [TRENTON6613.800] [6]] [ANGL156661 [DARL G1 22.000] [1]
CHNL# 16: [ANGL199085 [TRENTN5 13.800] [5]] [ANGL156661 [DARL G1 22.000] [1]
CHNL# 15: [ANGL199061 [TMP1 STO13.800] [1]] [ANGL156661 [DARL G1 22.000] [1]
CHNL# 13: [ANGL199043 [ACONIG1 20.000] [1]] [ANGL156661 [DARL G1 22.000] [1]
CHNL# 11: [ANGL199001 [LINGAN1 14.400] [1]] [ANGL156661 [DARL G1 22.000] [1]
TUE, JAN 27 2009 15:54
NS ANGLE

2013 WINTER PEAK STORA 167, NS LOAD 2371
NS-NB=-200; NB-NE=300; CBX=543; ONI=773 ONS=863
3 PHASE FAULT ON L6014 AT TUFT'S COVE
CLEARED IN 6 CYCLES RECLOSING ATTEMPT FROM 91H IN 10 SEC
FILE: a116-l6014_91H_3ph_recl-2013WP-NS-import-200.out
CHNL# 10: [ANGL190472 [BLLDNG2 19.000] [1]] [ANGL156661 [DARL G1 22.000] [1]
CHNL# 6: [ANGL190456 [LEPRG1 26.000] [1]] [ANGL156661 [DARL G1 22.000] [1]
CHNL# 5: [ANGL190450 [MACTG1 13.800] [1]] [ANGL156661 [DARL G1 22.000] [1]
CHNL# 3: [ANGL126652 [RAV 3 22.000] [1]] [ANGL156661 [DARL G1 22.000] [1]
CHNL# 2: [ANGL101063 [MYST G7 22.000] [1]] [ANGL156661 [DARL G1 22.000] [1]
CHNL# 1: [ANGL100060 [MIS GT1 18.000] [1]] [ANGL156661 [DARL G1 22.000] [1]
TUE, JAN 27 2009 15:54
"NE,NY,NB ANGLE"

2013 WINTER PEAK STORA 167, NS LOAD 2371
NS-NB=-200; NB-NE=300; CBX=543; ONI=773 ONS=863
3 PHASE FAULT ON L6014 AT TUFT'S COVE
CLEARED IN 6 CYCLES RECLOSING ATTEMPT FROM 91H IN 10 SEC
FILE: a116-l6014_91H_3ph_recl-2013WP-NS-import-200.out
CHNL# 59: [POWER199169 [TUFTCV3 14.400] [3]]
CHNL# 56: [POWER199086 [TRENTON6613.800] [6]]
CHNL# 55: [POWER199085 [TRENTN5 13.800] [5]]
CHNL# 54: [POWER199061 [TMP1 STO13.800] [1]]
CHNL# 52: [POWER199043 [ACONIG1 20.000] [1]]
CHNL# 50: [POWER199001 [LINGAN1 14.400] [1]]
TUE, JAN 27 2009 15:55
NS MW

2013 WINTER PEAK STORA 167, NS LOAD 2371
NS-NB=-200; NB-NE=300; CBX=543; ONI=773 ONS=863
3 PHASE FAULT ON L6014 AT TUFT'S COVE
CLEARED IN 6 CYCLES RECLOSING ATTEMPT FROM 91H IN 10 SEC
FILE: a116-l6014_91H_3ph_recl-2013WP-NS-import-200.out
CHNL# 49: [POWER190472 [BLLDNG2 19.000] [1]]
CHNL# 45: [POWER190456 [LEPRG1 26.000] [1]]
CHNL# 44: [POWER190450 [MACTG1 13.800] [1]]
CHNL# 42: [POWER126652 [RAV 3 22.000] [1]]
CHNL# 41: [POWER101063 [MYST G7 22.000] [1]]
CHNL# 40: [POWER100060 [MIS GT1 18.000] [1]]
TUE, JAN 27 2009 15:54
"NE,NY,NB POWER"

2013 WINTER PEAK STORA 167, NS LOAD 2371
NS-NB=-200; NB-NE=300; CBX=543; ONI=773 ONS=863
3 PHASE FAULT ON L6014 AT TUFT'S COVE
CLEARED IN 6 CYCLES RECLOSING ATTEMPT FROM 91H IN 10 SEC
FILE: a116-l6014_91H_3ph_recl-2013WP-NS-import-200.out
CHNL# 119: [VARS IR141-DIGBY]
CHNL# 118: [VARS IR137-STATIA]
CHNL# 117: [VARS IR114-GLENDHU]
CHNL# 116: [VARS IR84-DALHOUSIE]
CHNL# 115: [VARS IR82_NUTTBY]
CHNL# 114: [VARS IR45_AMHERST]
TIME (SECONDS)
TUE, JAN 27 2009 15:55
NS WIND MV

2013 WINTER PEAK STORA 167, NS LOAD 2371
NS-NB=-200; NB-NE=300; CBX=543; ONI=773 ONS=863
3 PHASE FAULT ON L6014 AT TUFT'S COVE
CLEARED IN 6 CYCLES RECLOSING ATTEMPT FROM 91H IN 10 SEC
FILE: a116-l6014_91H_3ph_recl-2013WP-NS-import-200.out
CHNL# 79: [POWER IR141-DIGBY]
CHNL# 78: [POWER IR137-STATIA]
CHNL# 77: [POWER IR114-GLENDHU]
CHNL# 76: [POWER IR84-DALHOUSIE]
CHNL# 75: [POWER IR82_NUTTBY]
CHNL# 74: [POWER IR45_AMHERST]
TIME (SECONDS)
TUE, JAN 27 2009 15:55
NS WIND MW

2013 WINTER PEAK STORA 167, NS LOAD 2371
NS-NB=-200; NB-NE=300; CBX=543; ONI=773 ONS=863
3 PHASE FAULT ON L6014 AT TUFT'S COVE
CLEARED IN 6 CYCLES RECLOSING ATTEMPT FROM 91H IN 10 SEC
FILE: a116-l6014_91H_3ph_recl-2013WP-NS-import-200.out
CHNL# 133: [VOLT199125 [ONSLOW 345.00]]
CHNL# 132: [VOLT199120 [HOPEWELL 345.00]]
CHNL# 131: [VOLT199045 [WOODBINE345.00]]
CHNL# 130: [VOLT190320 [SALBRY 345.00]]
CHNL# 128: [VOLT190004 [KESWICK 345.00]]
CHNL# 127: [VOLT 70002 [ORRINGTN345.00]]
TIME (SECONDS)
TUE, JAN 27 2009 15:55
"345KV VOLTAGE"

2013 WINTER PEAK STORA 167, NS LOAD 2371
NS-NB=-200; NB-NE=300; CBX=543; ONI=773 ONS=863
3 PHASE FAULT ON L6014 AT TUFT'S COVE
CLEARED IN 6 CYCLES RECLOSING ATTEMPT FROM 91H IN 10 SEC
FILE: a116-l6014_91H_3ph_recl-2013WP-NS-import-200.out
CHNL# 125: 60*(1+[FREQ199125 [ONSLOW 345.00]])
CHNL# 124: 60*(1+[FREQ199120 [HOPEWELL 345.00]])
CHNL# 123: 60*(1+[FREQ199045 [WOODBINE345.00]])
CHNL# 122: 60*(1+[FREQ190320 [SALBRY 345.00]])
CHNL# 121: 60*(1+[FREQ190197 [C.COVE 345.00]])
CHNL# 120: 60*(1+[FREQ 70002 [ORRINGTN345.00]])
TIME (SECONDS)
TUE, JAN 27 2009 15:55
FREQUENCY HZ

2013 WINTER PEAK STORA 167, NS LOAD 2371
NS-NB=-200; NB-NE=300; CBX=543; ONI=773 ONS=863
3 PHASE FAULT ON L6014 AT TUFT'S COVE
CLEARED IN 6 CYCLES RECLOSING ATTEMPT FROM 91H IN 10 SEC
FILE: a116-l6014_91H_3ph_recl-2013WP-NS-import-200.out
CHNL# 146: [VOLT199280 [TUSKET A138.00]]
CHNL# 145: [VOLT199193 [HHWAS 138.00]]
CHNL# 144: [VOLT199165 [TUFT COVE138.00]]
CHNL# 143: [VOLT199138 [SPRNGHILL138.00]]
CHNL# 142: [VOLT199090 [SON-TREN138.00]]
CHNL# 141: [VOLT199051 [HASTINGS138.00]]
1.2000
0.70000
0.0
1.0000
2.0000
3.0000
4.0000
5.0000
6.0000
7.0000
8.0000
9.0000
10.000
TIME (SECONDS)
TUE, JAN 27 2009 15:55
138KV BUS VOLTS

2013 WINTER PEAK STORA 167, NS LOAD 2371
NS-NB=-200; NB-NE=300; CBX=543; ONI=773 ONS=863
3 PHASE FAULT ON L6014 AT TUFT'S COVE
CLEARED IN 6 CYCLES RECLOSING ATTEMPT FROM 91H IN 10 SEC
FILE: a116-l6014_91H_3ph_recl-2013WP-NS-import-200.out
CHNL# 140: [VOLT199240 [BWATER A230.00]]
CHNL# 139: [VOLT199200 [BRUSHY 230.00]]
CHNL# 138: [VOLT199130 [ONSLOW 230.00]]
CHNL# 137: [VOLT199050 [HASTINGS230.00]]
CHNL# 136: [VOLT199044 [PT.ACONI230.00]]
CHNL# 135: [VOLT199000 [LINGAN 230.00]]
1.2000
0.70000
0.0
1.0000
2.0000
3.0000
4.0000
5.0000
6.0000
7.0000
8.0000
9.0000
10.000
TIME (SECONDS)
TUE, JAN 27 2009 15:55
230KV BUS VOLTS

2013 WINTER PEAK STORA 167, NS LOAD 2371
NS-NB=-200; NB-NE=300; CBX=543; ONI=773 ONS=863
3 PHASE FAULT ON L6014 AT TUFT'S COVE
CLEARED IN 6 CYCLES RECLOSING ATTEMPT FROM 91H IN 10 SEC
FILE: a116-l6014_91H_3ph_recl-2013WP-NS-import-200.out
CHNL# 217: [L6513MW]
CHNL# 215: [L6503MW]
CHNL# 197: [L8003MW]
CHNL# 195: [L8004MW]
CHNL# 193: [L8001MW]
CHNL# 221: [L3001MW]
250.00
500.00
1000.0
0.0
-250.0
-1000.
TIME (SECONDS)
TUE, JAN 27 2009 15:55
LINE FLOW MW

2013 WINTER PEAK STORA 167, NS LOAD 2371
NS-NB=-200; NB-NE=300; CBX=543; ONI=773 ONS=863
3 PHASE FAULT ON L6014 AT TUFT'S COVE
CLEARED IN 6 CYCLES RECLOSING ATTEMPT FROM 91H IN 10 SEC
FILE: a116-l6014_91H_3ph_recl-2013WP-NS-import-200.out
CHNL# 154: [IR141-DIGBYH69.0 VOLTS]
CHNL# 153: [IR137-STATIG25.0 VOLTS]
CHNL# 152: [IR114-GLENDH138.0 VOLTS]
CHNL# 151: [IR84-DALHOHV230.0 VOLTS]
CHNL# 150: [IR82_NUTBHV69.0 VOLTS]
CHNL# 149: [IR45_AMHERTP138.0 VOLTS]
1.2000
0.70000
0.0
1.0000
2.0000
3.0000
4.0000
5.0000
6.0000
7.0000
8.0000
9.0000
10.000
TIME (SECONDS)
TUE, JAN 27 2009 15:55
WIND BUS VOLTS

2013 WINTER PEAK STORA 167, NS LOAD 2371
NS-NB=-200; NB-NE=300; CBX=543; ONI=773 ONS=863
3 PHASE FAULT ON L6014 AT TUFT'S COVE PRIMARY PROTECTION FA
CLEARED IN 6 CYCLES RECLOSING ATTEMPT FROM 91H IN 10 SEC
FILE: a116F-I6014_91H_3ph_recl-2013WP-NS-import-200.out
CHNL#'S 20:4 [ANGL199169] [TUFTCV3 14.400] [3] [ANGL156661] [DARL G1 22.000] [1]
CHNL#'S 17:4 [ANGL199086] [TRENTON613.800] [6] [ANGL156661] [DARL G1 22.000] [1]
CHNL#'S 16:4 [ANGL199085] [TRENTN5 13.800] [5] [ANGL156661] [DARL G1 22.000] [1]
CHNL#'S 15:4 [ANGL199061] [TMP1 STO13.800] [1] [ANGL156661] [DARL G1 22.000] [1]
CHNL#'S 13:4 [ANGL199043] [ACONIG1 20.000] [1] [ANGL156661] [DARL G1 22.000] [1]
CHNL#'S 11:4 [ANGL199001] [LINGAN1 14.400] [1] [ANGL156661] [DARL G1 22.000] [1]
TIME (SECONDS)
TUE, JAN 27 2009 15:55
NS ANGLE

2013 WINTER PEAK STORA 167, NS LOAD 2371
NS-NB=-200; NB-NE=300; CBX=543; ONI=773 ONS=863
3 PHASE FAULT ON L6014 AT TUFT'S COVE PRIMARY PROTECTION FA
CLEARED IN 6 CYCLES RECLOSING ATTEMPT FROM 91H IN 10 SEC
FILE: a116F-I6014_91H_3ph_recl-2013WP-NS-import-200.out
CHNL#'S 10:4 [ANGL190472] [BLLDNG2 19.000] [1] [ANGL156661] [DARL G1 22.000] [1]
CHNL#'S 6:4 [ANGL190456] [LEPRG1 26.000] [1] [ANGL156661] [DARL G1 22.000] [1]
CHNL#'S 5:4 [ANGL190450] [MACTG1 13.800] [1] [ANGL156661] [DARL G1 22.000] [1]
CHNL#'S 3:4 [ANGL126652] [RAV 3 22.000] [1] [ANGL156661] [DARL G1 22.000] [1]
CHNL#'S 2:4 [ANGL101063] [MYST G7 22.000] [1] [ANGL156661] [DARL G1 22.000] [1]
CHNL#'S 1:4 [ANGL100060] [MIS GT1 18.000] [1] [ANGL156661] [DARL G1 22.000] [1]
TIME (SECONDS)
TUE, JAN 27 2009 15:55
"NE,NY,NB ANGLE"

2013 WINTER PEAK STORA 167, NS LOAD 2371
NS-NB=-200; NB-NE=300; CBX=543; ONI=773 ONS=863
3 PHASE FAULT ON L6014 AT TUFT'S COVE PRIMARY PROTECTION FA
CLEARED IN 6 CYCLES RECLOSING ATTEMPT FROM 91H IN 10 SEC
FILE: a116F-I6014_91H_3ph_recl-2013WP-NS-import-200.out
CHNL# 59: [POWER199169] [TUFTCV3 14.400] [3] [1]
CHNL# 56: [POWER199086] [TRENTON613.800] [6] [1]
CHNL# 55: [POWER199085] [TRENTN5 13.800] [5] [1]
CHNL# 54: [POWER199061] [TMP1 STO13.800] [1] [1]
CHNL# 52: [POWER199043] [ACONIG1 20.000] [1] [1]
CHNL# 50: [POWER199001] [LINGAN1 14.400] [1] [1]
TIME (SECONDS)
TUE, JAN 27 2009 15:55
NS MW

2013 WINTER PEAK STORA 167, NS LOAD 2371
NS-NB=-200; NB-NE=300; CBX=543; ONI=773 ONS=863
3 PHASE FAULT ON L6014 AT TUFT'S COVE PRIMARY PROTECTION FA
CLEARED IN 6 CYCLES RECLOSING ATTEMPT FROM 91H IN 10 SEC
FILE: a116F-I6014_91H_3ph_recl-2013WP-NS-import-200.out
CHNL# 49: [POWER190472] [BLLDNG2 19.000] [1]
CHNL# 45: [POWER190456] [LEPRG1 26.000] [1]
CHNL# 44: [POWER190450] [MACTG1 13.800] [1]
CHNL# 42: [POWER126652] [RAV 3 22.000] [1]
CHNL# 41: [POWER101063] [MYST G7 22.000] [1]
CHNL# 40: [POWER100060] [MIS GT1 18.000] [1]
TIME (SECONDS)
TUE, JAN 27 2009 15:55
"NE,NY,NB POWER"

2013 WINTER PEAK STORA 167, NS LOAD 2371
NS-NB=-200; NB-NE=300; CBX=543; ONI=773 ONS=863
3 PHASE FAULT ON L6014 AT TUFT'S COVE PRIMARY PROTECTION FA
CLEARED IN 6 CYCLES RECLOSING ATTEMPT FROM 91H IN 10 SEC
FILE: a116F-I6014_91H_3ph_recl-2013WP-NS-import-200.out
CHNL# 119: [VARS IR141-DIGBY]
CHNL# 118: [VARS IR137-STATIA]
CHNL# 117: [VARS IR114-GLENDHU]
CHNL# 116: [VARS IR84-DALHOUSIE]
CHNL# 115: [VARS IR82_NUTTBY]
CHNL# 114: [VARS IR45_AMHERST]
TIME (SECONDS)
TUE, JAN 27 2009 15:55
NS WIND MV

2013 WINTER PEAK STORA 167, NS LOAD 2371
NS-NB=-200; NB-NE=300; CBX=543; ONI=773 ONS=863
3 PHASE FAULT ON L6014 AT TUFT'S COVE PRIMARY PROTECTION FA
CLEARED IN 6 CYCLES RECLOSING ATTEMPT FROM 91H IN 10 SEC
FILE: a116F-I6014_91H_3ph_recl-2013WP-NS-import-200.out
CHNL# 79: [POWER IR141-DIGBY]
CHNL# 78: [POWER IR137-STATIA]
CHNL# 77: [POWER IR114-GLENDHU]
CHNL# 76: [POWER IR84-DALHOUSIE]
CHNL# 75: [POWER IR82_NUTTBY]
CHNL# 74: [POWER IR45_AMHERST]
TIME (SECONDS)
TUE, JAN 27 2009 15:55
NS WIND MW

2013 WINTER PEAK STORA 167, NS LOAD 2371
NS-NB=-200; NB-NE=300; CBX=543; ONI=773 ONS=863
3 PHASE FAULT ON L6014 AT TUFT'S COVE PRIMARY PROTECTION FA
CLEARED IN 6 CYCLES RECLOSING ATTEMPT FROM 91H IN 10 SEC
FILE: a116F-I6014_91H_3ph_recl-2013WP-NS-import-200.out
CHNL# 133: [VOLT199125 [ONSLOW 345.00]]
CHNL# 132: [VOLT199120 [HOPEWELL 345.00]]
CHNL# 131: [VOLT199045 [WOODBINE345.00]]
CHNL# 130: [VOLT190320 [SALBRY 345.00]]
CHNL# 128: [VOLT190004 [KESWICK 345.00]]
CHNL# 127: [VOLT 70002 [ORRINGTN345.00]]
TIME (SECONDS)
TUE, JAN 27 2009 15:55
"345KV VOLTAGE"

2013 WINTER PEAK STORA 167, NS LOAD 2371
NS-NB=-200; NB-NE=300; CBX=543; ONI=773 ONS=863
3 PHASE FAULT ON L6014 AT TUFT'S COVE PRIMARY PROTECTION FA
CLEARED IN 6 CYCLES RECLOSING ATTEMPT FROM 91H IN 10 SEC
FILE: a116F-I6014_91H_3ph_recl-2013WP-NS-import-200.out
CHNL# 125: 60*(1+[FREQ199125 [ONSLOW 345.00]])
CHNL# 124: 60*(1+[FREQ199120 [HOPEWELL 345.00]])
CHNL# 123: 60*(1+[FREQ199045 [WOODBINE345.00]])
CHNL# 122: 60*(1+[FREQ190320 [SALBRY 345.00]])
CHNL# 121: 60*(1+[FREQ190197 [C.COVE 345.00]])
CHNL# 120: 60*(1+[FREQ 70002 [ORRINGTN345.00]])
TIME (SECONDS)
TUE, JAN 27 2009 15:55
FREQUENCY HZ

2013 WINTER PEAK STORA 167, NS LOAD 2371
NS-NB=-200; NB-NE=300; CBX=543; ONI=773 ONS=863
3 PHASE FAULT ON L6014 AT TUFT'S COVE PRIMARY PROTECTION FA
CLEARED IN 6 CYCLES RECLOSING ATTEMPT FROM 91H IN 10 SEC
FILE: a116F-l6014_91H_3ph_recl-2013WP-NS-import-200.out
CHNL# 146: [VOLT199280 [TUSKET A138.00]]
CHNL# 145: [VOLT199193 [HWAS 138.00]]
CHNL# 144: [VOLT199165 [TUFTCOVE138.00]]
CHNL# 143: [VOLT199138 [SPRNGHILL138.00]]
CHNL# 142: [VOLT199090 [SON-TREN138.00]]
CHNL# 141: [VOLT199051 [HASTINGS138.00]]
TIME (SECONDS)
TUE, JAN 27 2009 15:55
138KV BUS VOLTS

2013 WINTER PEAK STORA 167, NS LOAD 2371
NS-NB=-200; NB-NE=300; CBX=543; ONI=773 ONS=863
3 PHASE FAULT ON L6014 AT TUFT'S COVE PRIMARY PROTECTION FA
CLEARED IN 6 CYCLES RECLOSING ATTEMPT FROM 91H IN 10 SEC
FILE: a116F-l6014_91H_3ph_recl-2013WP-NS-import-200.out
CHNL# 140: [VOLT199240 [BWATER A230.00]]
CHNL# 139: [VOLT199200 [BRUSHY 230.00]]
CHNL# 138: [VOLT199130 [ONSLOW 230.00]]
CHNL# 137: [VOLT199050 [HASTINGS230.00]]
CHNL# 136: [VOLT199044 [PT.ACONI230.00]]
CHNL# 135: [VOLT199000 [LINGAN 230.00]]
TIME (SECONDS)
TUE, JAN 27 2009 15:55
230KV BUS VOLTS

2013 WINTER PEAK STORA 167, NS LOAD 2371
NS-NB=-200; NB-NE=300; CBX=543; ONI=773 ONS=863
3 PHASE FAULT ON L6014 AT TUFT'S COVE PRIMARY PROTECTION FA
CLEARED IN 6 CYCLES RECLOSING ATTEMPT FROM 91H IN 10 SEC
FILE: a116F-l6014_91H_3ph_recl-2013WP-NS-import-200.out
CHNL# 217: [L6533MW]
CHNL# 215: [L6503MW]
CHNL# 197: [L8003MW]
CHNL# 195: [L8004MW]
CHNL# 193: [L8001MW]
CHNL# 221: [L3001MW]
TIME (SECONDS)
TUE, JAN 27 2009 15:55
LINE FLOW MW

2013 WINTER PEAK STORA 167, NS LOAD 2371
NS-NB=-200; NB-NE=300; CBX=543; ONI=773 ONS=863
3 PHASE FAULT ON L6014 AT TUFT'S COVE PRIMARY PROTECTION FA
CLEARED IN 6 CYCLES RECLOSING ATTEMPT FROM 91H IN 10 SEC
FILE: a116F-l6014_91H_3ph_recl-2013WP-NS-import-200.out
CHNL# 154: [IR141-DIGBYH69.0 VOLTS]
CHNL# 153: [IR137-STATIG25.0 VOLTS]
CHNL# 152: [IR114-GLENDH138.0 VOLTS]
CHNL# 151: [IR84-DALHOHV230.0 VOLTS]
CHNL# 150: [IR82 NUTBHV69.0 VOLTS]
CHNL# 149: [IR45 AMHERTP138.0 VOLTS]
TIME (SECONDS)
TUE, JAN 27 2009 15:55
WIND BUS VOLTS

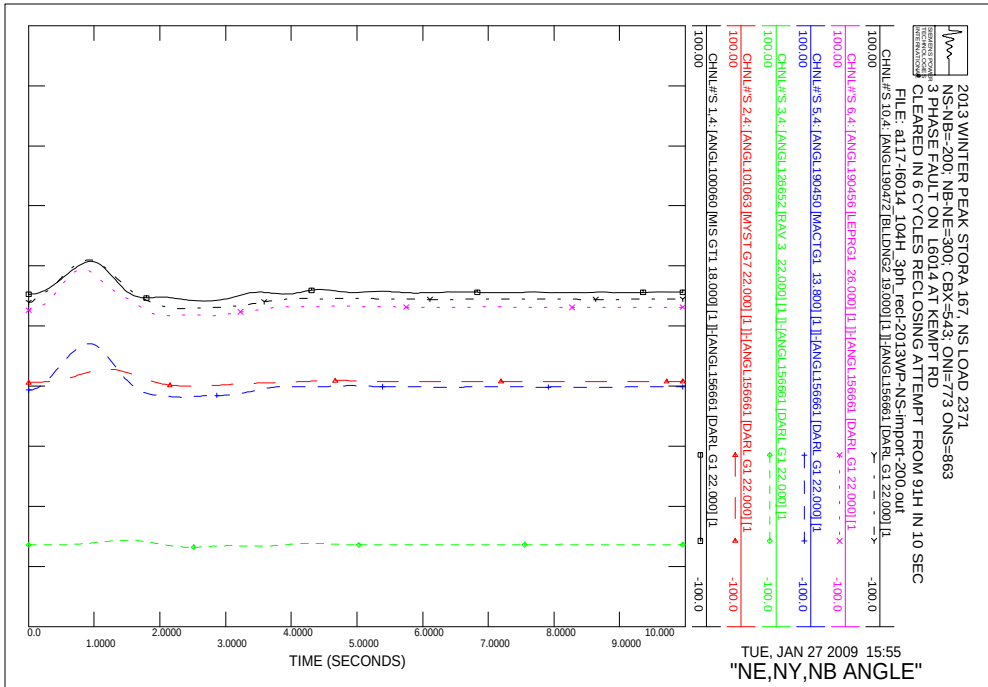
2013 WINTER PEAK STORA 167, NS LOAD 2371
NS-NB=-200; NB-NE=300; CBX=543; ONI=773 ONS=863
3 PHASE FAULT ON L6014 AT KEMPT RD
CLEARED IN 6 CYCLES RECLOSING ATTEMPT FROM 91H IN 10 SEC
FILE: a117-l6014_104H_3ph_recl-2013WP-NS-import-200.out
CHNL#S 10,4: [ANGL190472 [BLLDNG2 19.000] [1]]-[ANGL156661 [DARL G1 22.000] [1
CHNL#S 6,4: [ANGL190456 [LEPRG1 26.000] [1]]-[ANGL156661 [DARL G1 22.000] [1
CHNL#S 5,4: [ANGL190450 [MACTG1 13.800] [1]]-[ANGL156661 [DARL G1 22.000] [1
CHNL#S 3,4: [ANGL126652 [RAV 3 22.000] [1]]-[ANGL156661 [DARL G1 22.000] [1
CHNL#S 2,4: [ANGL101063 [MYST G7 22.000] [1]]-[ANGL156661 [DARL G1 22.000] [1
CHNL#S 1,4: [ANGL100060 [MIS GT1 18.000] [1]]-[ANGL156661 [DARL G1 22.000] [1
TIME (SECONDS)
TUE, JAN 27 2009 15:55
"NE,NY,NB ANGLE"

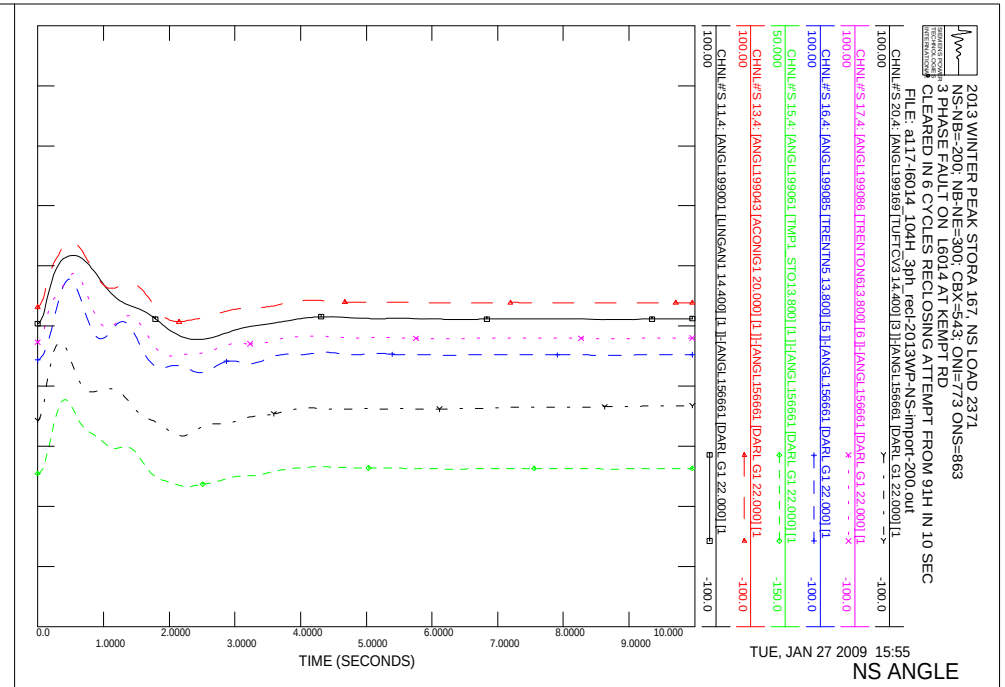
2013 WINTER PEAK STORA 167, NS LOAD 2371
NS-NB=-200; NB-NE=300; CBX=543; ONI=773 ONS=863
3 PHASE FAULT ON L6014 AT KEMPT RD
CLEARED IN 6 CYCLES RECLOSING ATTEMPT FROM 91H IN 10 SEC
FILE: a117-l6014_104H_3ph_recl-2013WP-NS-import-200.out
CHNL#S 20,4: [ANGL199169 [TUFTCV3 14.400] [3]]-[ANGL156661 [DARL G1 22.000] [1
CHNL#S 17,4: [ANGL199086 [TRENTON613.800] [6]]-[ANGL156661 [DARL G1 22.000] [1
CHNL#S 16,4: [ANGL199085 [TRENTN5 13.800] [5]]-[ANGL156661 [DARL G1 22.000] [1
CHNL#S 15,4: [ANGL199061 [TMP1 STO13.800] [1]]-[ANGL156661 [DARL G1 22.000] [1
CHNL#S 13,4: [ANGL199043 [ACONIG1 20.000] [1]]-[ANGL156661 [DARL G1 22.000] [1
CHNL#S 11,4: [ANGL199001 [LINGAN1 14.400] [1]]-[ANGL156661 [DARL G1 22.000] [1
TIME (SECONDS)
TUE, JAN 27 2009 15:55
NS ANGLE

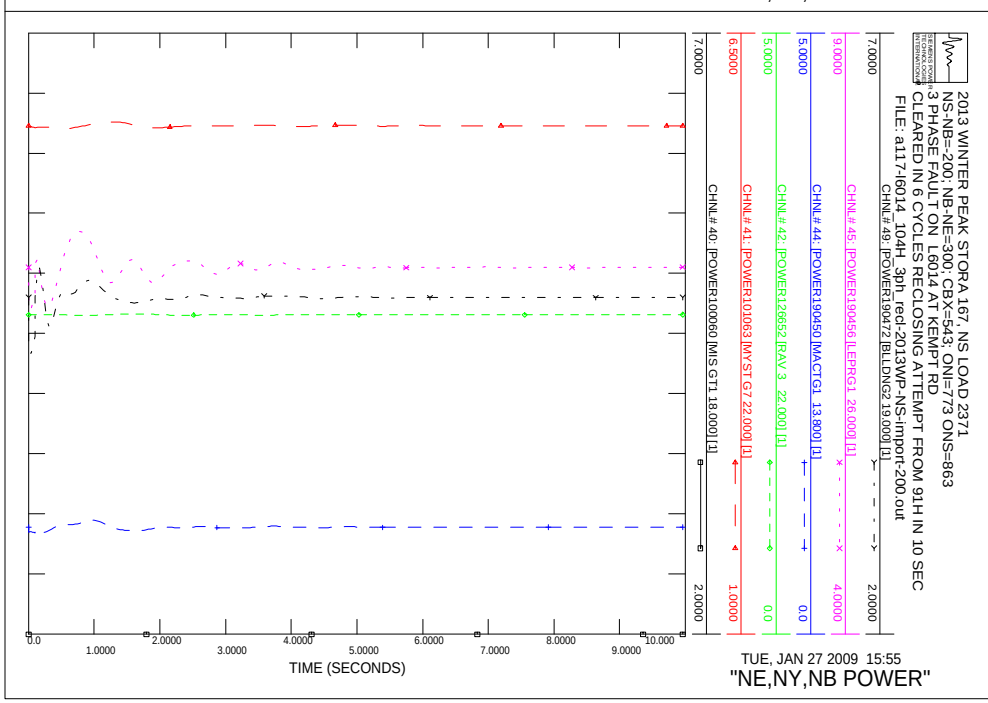
2013 WINTER PEAK STORA 167, NS LOAD 2371
NS-NB=-200; NB-NE=300; CBX=543; ONI=773 ONS=863
3 PHASE FAULT ON L6014 AT KEMPT RD
CLEARED IN 6 CYCLES RECLOSING ATTEMPT FROM 91H IN 10 SEC
FILE: a117-l6014_104H_3ph_recl-2013WP-NS-import-200.out
CHNL# 49: [POWER190472 [BLLDNG2 19.000] [1]
CHNL# 45: [POWER190456 [LEPRG1 26.000] [1]
CHNL# 44: [POWER190450 [MACTG1 13.800] [1]
CHNL# 42: [POWER126652 [RAV 3 22.000] [1]
CHNL# 41: [POWER101063 [MYST G7 22.000] [1]
CHNL# 40: [POWER100060 [MIS GT1 18.000] [1]
TIME (SECONDS)
TUE, JAN 27 2009 15:55
"NE,NY,NB POWER"

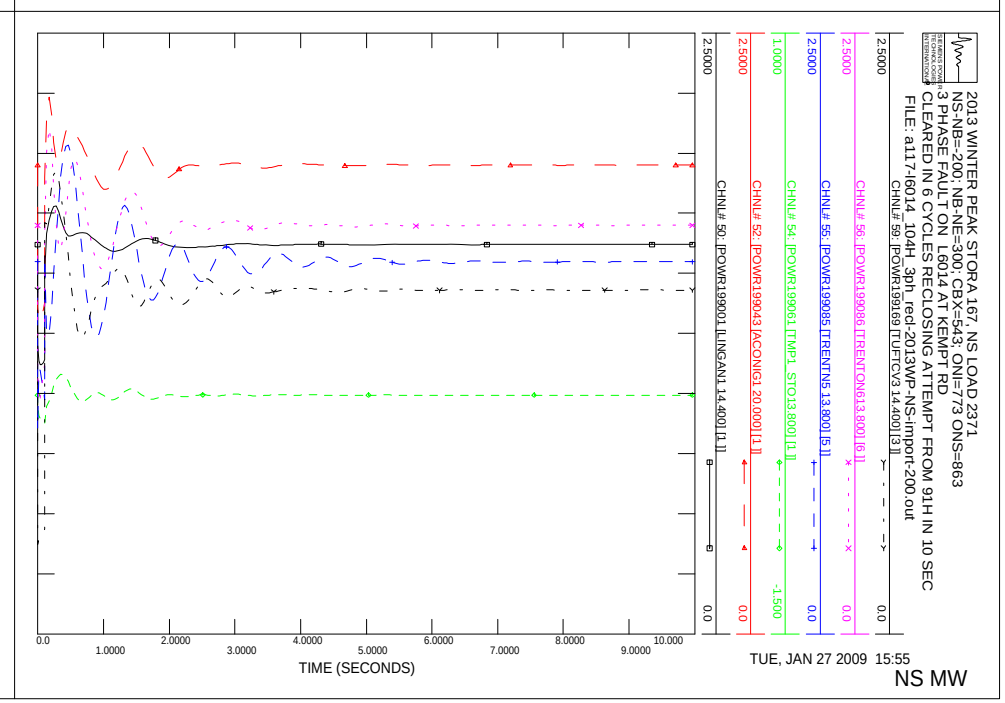
2013 WINTER PEAK STORA 167, NS LOAD 2371
NS-NB=-200; NB-NE=300; CBX=543; ONI=773 ONS=863
3 PHASE FAULT ON L6014 AT KEMPT RD
CLEARED IN 6 CYCLES RECLOSING ATTEMPT FROM 91H IN 10 SEC
FILE: a117-l6014_104H_3ph_recl-2013WP-NS-import-200.out
CHNL# 59: [POWR199169 [TUFTCV3 14.400] [3]]
CHNL# 56: [POWR199086 [TRENTON613.800] [6]]
CHNL# 55: [POWR199085 [TRENTN5 13.800] [5]]
CHNL# 54: [POWR199061 [TMP1 STO13.800] [1]]
CHNL# 52: [POWR199043 [ACONIG1 20.000] [1]]
CHNL# 50: [POWR199001 [LINGAN1 14.400] [1]]
TIME (SECONDS)
TUE, JAN 27 2009 15:55
NS MW

2013 WINTER PEAK STORA 167, NS LOAD 2371
NS-NB=-200; NB-NE=300; CBX=543; ONI=773 ONS=863
3 PHASE FAULT ON L6014 AT KEMPT RD
CLEARED IN 6 CYCLES RECLOSING ATTEMPT FROM 91H IN 10 SEC
FILE: a117-l6014_104H_3ph_recl-2013WP-NS-import-200.out
CHNL# 119: [VARS IR141-DIGBY]
CHNL# 118: [VARS IR137-STATIA]
CHNL# 117: [VARS IR114-GLENDHU]
CHNL# 116: [VARS IR84-DALHOUSIE]
CHNL# 115: [VARS IR82_NUTTBY]
CHNL# 114: [VARS IR45_AMHERST]
TIME (SECONDS)
TUE, JAN 27 2009 15:55
NS WIND MV

2013 WINTER PEAK STORA 167, NS LOAD 2371
NS-NB=-200; NB-NE=300; CBX=543; ONI=773 ONS=863
3 PHASE FAULT ON L6014 AT KEMPT RD
CLEARED IN 6 CYCLES RECLOSING ATTEMPT FROM 91H IN 10 SEC
FILE: a117-l6014_104H_3ph_recl-2013WP-NS-import-200.out
CHNL# 79: [POWER IR141-DIGBY]
CHNL# 78: [POWER IR137-STATIA]
CHNL# 77: [POWER IR114-GLENDHU]
CHNL# 76: [POWER IR84-DALHOUSIE]
CHNL# 75: [POWER IR82_NUTTBY]
CHNL# 74: [POWER IR45_AMHERST]
TIME (SECONDS)
TUE, JAN 27 2009 15:55
NS WIND MW

2013 WINTER PEAK STORA 167, NS LOAD 2371
NS-NB=-200; NB-NE=300; CBX=543; ONI=773 ONS=863
3 PHASE FAULT ON L6014 AT KEMPT RD
CLEARED IN 6 CYCLES RECLOSING ATTEMPT FROM 91H IN 10 SEC
FILE: a117-l6014_104H_3ph_recl-2013WP-NS-import-200.out
CHNL# 133: [VOLT199125 [ONSLOW 345.00]]
CHNL# 132: [VOLT199120 [HOPEWELL 345.00]]
CHNL# 131: [VOLT199045 [WOODBINE345.00]]
CHNL# 130: [VOLT190320 [SALBRY 345.00]]
CHNL# 128: [VOLT190004 [KESWICK 345.00]]
CHNL# 127: [VOLT 70002 [ORRINGTN345.00]]
TIME (SECONDS)
TUE, JAN 27 2009 15:55
"345KV VOLTAGE"

2013 WINTER PEAK STORA 167, NS LOAD 2371
NS-NB=-200; NB-NE=300; CBX=543; ONI=773 ONS=863
3 PHASE FAULT ON L6014 AT KEMPT RD
CLEARED IN 6 CYCLES RECLOSING ATTEMPT FROM 91H IN 10 SEC
FILE: a117-l6014_104H_3ph_recl-2013WP-NS-import-200.out
CHNL# 125: 60*(1+[FREQ199125 [ONSLOW 345.00]])
CHNL# 124: 60*(1+[FREQ199120 [HOPEWELL 345.00]])
CHNL# 123: 60*(1+[FREQ199045 [WOODBINE345.00]])
CHNL# 122: 60*(1+[FREQ190320 [SALBRY 345.00]])
CHNL# 121: 60*(1+[FREQ190197 [C.COVE 345.00]])
CHNL# 120: 60*(1+[FREQ 70002 [ORRINGTN345.00]])
TIME (SECONDS)
TUE, JAN 27 2009 15:55
FREQUENCY HZ

2013 WINTER PEAK STORA 167, NS LOAD 2371
NS-NB=-200; NB-NE=300; CBX=543; ONI=773 ONS=863
3 PHASE FAULT ON L6014 AT KEMPT RD
CLEARED IN 6 CYCLES RECLOSING ATTEMPT FROM 91H IN 10 SEC
FILE: a117-l6014_104H_3ph_recl-2013WP-NS-import-200.out
CHNL# 146: [VOLT199280 [TUSKET A138.00]]
CHNL# 145: [VOLT199193 [HHWAS 138.00]]
CHNL# 144: [VOLT199165 [TUFTCOVE138.00]]
CHNL# 143: [VOLT199138 [SPRNGHILL138.00]]
CHNL# 142: [VOLT199090 [SON-TREN138.00]]
CHNL# 141: [VOLT199051 [HASTINGS138.00]]
1.2000
0.70000
0.0
1.0000
2.0000
3.0000
4.0000
5.0000
6.0000
7.0000
8.0000
9.0000
10.000
TIME (SECONDS)
TUE, JAN 27 2009 15:55
138KV BUS VOLTS

2013 WINTER PEAK STORA 167, NS LOAD 2371
NS-NB=-200; NB-NE=300; CBX=543; ONI=773 ONS=863
3 PHASE FAULT ON L6014 AT KEMPT RD
CLEARED IN 6 CYCLES RECLOSING ATTEMPT FROM 91H IN 10 SEC
FILE: a117-l6014_104H_3ph_recl-2013WP-NS-import-200.out
CHNL# 140: [VOLT199240 [BWATER A230.00]]
CHNL# 139: [VOLT199200 [BRUSHY 230.00]]
CHNL# 138: [VOLT199130 [ONSLOW 230.00]]
CHNL# 137: [VOLT199050 [HASTINGS230.00]]
CHNL# 136: [VOLT199044 [PT.ACONI230.00]]
CHNL# 135: [VOLT199000 [LINGAN 230.00]]
1.2000
0.70000
0.0
1.0000
2.0000
3.0000
4.0000
5.0000
6.0000
7.0000
8.0000
9.0000
10.000
TIME (SECONDS)
TUE, JAN 27 2009 15:55
230KV BUS VOLTS

2013 WINTER PEAK STORA 167, NS LOAD 2371
NS-NB=-200; NB-NE=300; CBX=543; ONI=773 ONS=863
3 PHASE FAULT ON L6014 AT KEMPT RD
CLEARED IN 6 CYCLES RECLOSING ATTEMPT FROM 91H IN 10 SEC
FILE: a117-l6014_104H_3ph_recl-2013WP-NS-import-200.out
CHNL# 217: [L6533MW]
CHNL# 215: [L6503MW]
CHNL# 197: [L8003MW]
CHNL# 195: [L8004MW]
CHNL# 193: [L8001MW]
CHNL# 221: [L3001MW]
250.00
-250.0
500.00
0.0
1000.0
-1000.
0.0
1.0000
2.0000
3.0000
4.0000
5.0000
6.0000
7.0000
8.0000
9.0000
10.000
TIME (SECONDS)
TUE, JAN 27 2009 15:55
LINE FLOW MW

2013 WINTER PEAK STORA 167, NS LOAD 2371
NS-NB=-200; NB-NE=300; CBX=543; ONI=773 ONS=863
3 PHASE FAULT ON L6014 AT KEMPT RD
CLEARED IN 6 CYCLES RECLOSING ATTEMPT FROM 91H IN 10 SEC
FILE: a117-l6014_104H_3ph_recl-2013WP-NS-import-200.out
CHNL# 154: [IR141-DIGBYH69.0 VOLTS]
CHNL# 153: [IR137-STATIG25.0 VOLTS]
CHNL# 152: [IR114-GLENDH138.0 VOLTS]
CHNL# 151: [IR84-DALHOHV230.0 VOLTS]
CHNL# 150: [IR82_NUTBHV69.0 VOLTS]
CHNL# 149: [IR45_AMHERTP138.0 VOLTS]
1.2000
0.70000
0.0
1.0000
2.0000
3.0000
4.0000
5.0000
6.0000
7.0000
8.0000
9.0000
10.000
TIME (SECONDS)
TUE, JAN 27 2009 15:55
WIND BUS VOLTS

2013 WINTER PEAK STORA 167, NS LOAD 2371
NS-NB=-200; NB-NE=300; CBX=543; ONI=773 ONS=863
3 PHASE FAULT ON L6014 AT KEMPT RD PRIMARY FAILED
CLEARED IN 6 CYCLES RECLOSING ATTEMPT FROM 91H IN 10 SEC
FILE: a117F-l6014_104H_3ph_rec1-2013WP-NS-import-200.out
TIME (SECONDS)
TUE, JAN 27 2009 15:55
NS ANGLE

2013 WINTER PEAK STORA 167, NS LOAD 2371
NS-NB=-200; NB-NE=300; CBX=543; ONI=773 ONS=863
3 PHASE FAULT ON L6014 AT KEMPT RD PRIMARY FAILED
CLEARED IN 6 CYCLES RECLOSING ATTEMPT FROM 91H IN 10 SEC
FILE: a117F-l6014_104H_3ph_rec1-2013WP-NS-import-200.out
TIME (SECONDS)
TUE, JAN 27 2009 15:55
"NE,NY,NB ANGLE"

2013 WINTER PEAK STORA 167, NS LOAD 2371
NS-NB=-200; NB-NE=300; CBX=543; ONI=773 ONS=863
3 PHASE FAULT ON L6014 AT KEMPT RD PRIMARY FAILED
CLEARED IN 6 CYCLES RECLOSING ATTEMPT FROM 91H IN 10 SEC
FILE: a117F-l6014_104H_3ph_rec1-2013WP-NS-import-200.out
TIME (SECONDS)
TUE, JAN 27 2009 15:55
NS MW

2013 WINTER PEAK STORA 167, NS LOAD 2371
NS-NB=-200; NB-NE=300; CBX=543; ONI=773 ONS=863
3 PHASE FAULT ON L6014 AT KEMPT RD PRIMARY FAILED
CLEARED IN 6 CYCLES RECLOSING ATTEMPT FROM 91H IN 10 SEC
FILE: a117F-l6014_104H_3ph_rec1-2013WP-NS-import-200.out
TIME (SECONDS)
TUE, JAN 27 2009 15:55
"NE,NY,NB POWER"

2013 WINTER PEAK STORA 167, NS LOAD 2371
NS-NB=-200; NB-NE=300; CBX=543; ONI=773 ONS=863
3 PHASE FAULT ON L6014 AT KEMPT RD PRIMARY FAILED
CLEARED IN 6 CYCLES RECLOSING ATTEMPT FROM 91H IN 10 SEC
FILE: a117F-l6014_104H_3ph_rect-2013WP-NS-import-200.out
CHNL# 119: [VARS IR141-DIGBY]
CHNL# 118: [VARS IR137-STATIA]
CHNL# 117: [VARS IR114-GLENDHU]
CHNL# 116: [VARS IR84-DALHOUSIE]
CHNL# 115: [VARS IR82_NUTTBY]
CHNL# 114: [VARS IR45_AMHERST]
TIME (SECONDS)
TUE, JAN 27 2009 15:55
NS WIND MV

2013 WINTER PEAK STORA 167, NS LOAD 2371
NS-NB=-200; NB-NE=300; CBX=543; ONI=773 ONS=863
3 PHASE FAULT ON L6014 AT KEMPT RD PRIMARY FAILED
CLEARED IN 6 CYCLES RECLOSING ATTEMPT FROM 91H IN 10 SEC
FILE: a117F-l6014_104H_3ph_rect-2013WP-NS-import-200.out
CHNL# 79: [POWER IR141-DIGBY]
CHNL# 78: [POWER IR137-STATIA]
CHNL# 77: [POWER IR114-GLENDHU]
CHNL# 76: [POWER IR84-DALHOUSIE]
CHNL# 75: [POWER IR82_NUTTBY]
CHNL# 74: [POWER IR45_AMHERST]
TIME (SECONDS)
TUE, JAN 27 2009 15:55
NS WIND MW

2013 WINTER PEAK STORA 167, NS LOAD 2371
NS-NB=-200; NB-NE=300; CBX=543; ONI=773 ONS=863
3 PHASE FAULT ON L6014 AT KEMPT RD PRIMARY FAILED
CLEARED IN 6 CYCLES RECLOSING ATTEMPT FROM 91H IN 10 SEC
FILE: a117F-l6014_104H_3ph_rect-2013WP-NS-import-200.out
CHNL# 133: [VOLT199125 IONSLOW 345.00]
CHNL# 132: [VOLT199120 [HOPEWELL 345.00]
CHNL# 131: [VOLT199045 [WOODBINE345.00]]
CHNL# 130: [VOLT190320 [SALBRY 345.00]]
CHNL# 128: [VOLT190004 [KESWICK 345.00]]
CHNL# 127: [VOLT 70002 [ORRINGTN345.00]]
TIME (SECONDS)
TUE, JAN 27 2009 15:55
"345KV VOLTAGE"

2013 WINTER PEAK STORA 167, NS LOAD 2371
NS-NB=-200; NB-NE=300; CBX=543; ONI=773 ONS=863
3 PHASE FAULT ON L6014 AT KEMPT RD PRIMARY FAILED
CLEARED IN 6 CYCLES RECLOSING ATTEMPT FROM 91H IN 10 SEC
FILE: a117F-l6014_104H_3ph_rect-2013WP-NS-import-200.out
CHNL# 125: 60*(1+[FREQ199125 [ONSLOW 345.00]])
CHNL# 124: 60*(1+[FREQ199120 [HOPEWELL 345.00]])
CHNL# 123: 60*(1+[FREQ199045 [WOODBINE345.00]])
CHNL# 122: 60*(1+[FREQ190320 [SALBRY 345.00]])
CHNL# 121: 60*(1+[FREQ190197 [C.COVE 345.00]])
CHNL# 120: 60*(1+[FREQ 70002 [ORRINGTN345.00]])
TIME (SECONDS)
TUE, JAN 27 2009 15:55
FREQUENCY HZ

2013 WINTER PEAK STORA 167, NS LOAD 2371
NS-NB=-200; NB-NE=300; CBX=543; ONI=773 ONS=863
3 PHASE FAULT ON L6014 AT KEMPT RD PRIMARY FAILED
CLEARED IN 6 CYCLES RECLOSING ATTEMPT FROM 91H IN 10 SEC
FILE: a117F-l6014_104H_3ph_recl-2013WP-NS-import-200.out
CHNL# 146: [VOLT199280 [TUSKET A138.00]]
CHNL# 145: [VOLT199193 [HWAS 138.00]]
CHNL# 144: [VOLT199165 [TUFTCOVE138.00]]
CHNL# 143: [VOLT199138 [SPRNGHILL138.00]]
CHNL# 142: [VOLT199090 [50N-TREN138.00]]
CHNL# 141: [VOLT199051 [HASTINGS138.00]]
TIME (SECONDS)
TUE, JAN 27 2009 15:55
138KV BUS VOLTS

2013 WINTER PEAK STORA 167, NS LOAD 2371
NS-NB=-200; NB-NE=300; CBX=543; ONI=773 ONS=863
3 PHASE FAULT ON L6014 AT KEMPT RD PRIMARY FAILED
CLEARED IN 6 CYCLES RECLOSING ATTEMPT FROM 91H IN 10 SEC
FILE: a117F-l6014_104H_3ph_recl-2013WP-NS-import-200.out
CHNL# 140: [VOLT199240 [BWATER A230.00]]
CHNL# 139: [VOLT199200 [BRUSHY 230.00]]
CHNL# 138: [VOLT199130 [ONSLOW 230.00]]
CHNL# 137: [VOLT199050 [HASTINGS230.00]]
CHNL# 136: [VOLT199044 [PT.ACONI230.00]]
CHNL# 135: [VOLT199000 [LINGAN 230.00]]
TIME (SECONDS)
TUE, JAN 27 2009 15:55
230KV BUS VOLTS

2013 WINTER PEAK STORA 167, NS LOAD 2371
NS-NB=-200; NB-NE=300; CBX=543; ONI=773 ONS=863
3 PHASE FAULT ON L6014 AT KEMPT RD PRIMARY FAILED
CLEARED IN 6 CYCLES RECLOSING ATTEMPT FROM 91H IN 10 SEC
FILE: a117F-l6014_104H_3ph_recl-2013WP-NS-import-200.out
CHNL# 217: [L6533MW]
CHNL# 215: [L6503MW]
CHNL# 197: [L8003MW]
CHNL# 195: [L8004MW]
CHNL# 193: [L8001MW]
CHNL# 221: [L3001MW]
TIME (SECONDS)
TUE, JAN 27 2009 15:55
LINE FLOW MW

2013 WINTER PEAK STORA 167, NS LOAD 2371
NS-NB=-200; NB-NE=300; CBX=543; ONI=773 ONS=863
3 PHASE FAULT ON L6014 AT KEMPT RD PRIMARY FAILED
CLEARED IN 6 CYCLES RECLOSING ATTEMPT FROM 91H IN 10 SEC
FILE: a117F-l6014_104H_3ph_recl-2013WP-NS-import-200.out
CHNL# 154: [IR141-DIGBYH69.0 VOLTS]
CHNL# 153: [IR137-STATIG25.0 VOLTS]
CHNL# 152: [IR114-GLENDH138.0 VOLTS]
CHNL# 151: [IR84-DALHOHV230.0 VOLTS]
CHNL# 150: [IR82_NUTBHV69.0 VOLTS]
CHNL# 149: [IR45_AMHERTP138.0 VOLTS]
TIME (SECONDS)
TUE, JAN 27 2009 15:55
WIND BUS VOLTS

2013 WINTER PEAK STORA 167, NS LOAD 2371
NS-NB=-200; NB-NE=300; CBX=543; ONI=773 ONS=863
3 PHASE FAULT ON L6014 AT KEMPT RD PRIMARY FAILED
TUFTS COVE UNITS TRIP
FILE: a117.1F-I6014_104H_3ph_recl-2013WP-NS-import-200.out
CHNL#S 20.4: [ANGL199169 [TUFTCV3 14.400] [3]] [ANGL156661 [DARL G1 22.000] [1]
CHNL#S 17.4: [ANGL199086 [TRENTON613.800] [6]] [ANGL156661 [DARL G1 22.000] [1]
CHNL#S 16.4: [ANGL199085 [TRENTN5 13.800] [5]] [ANGL156661 [DARL G1 22.000] [1]
CHNL#S 15.4: [ANGL199061 [TMP1 STO13.800] [1]] [ANGL156661 [DARL G1 22.000] [1]
CHNL#S 13.4: [ANGL199043 [ACONIG1 20.000] [1]] [ANGL156661 [DARL G1 22.000] [1]
CHNL#S 11.4: [ANGL199001 [LINGAN1 14.400] [1]] [ANGL156661 [DARL G1 22.000] [1]
TUE, JAN 27 2009 15:55
TIME (SECONDS)
NS ANGLE

2013 WINTER PEAK STORA 167, NS LOAD 2371
NS-NB=-200; NB-NE=300; CBX=543; ONI=773 ONS=863
3 PHASE FAULT ON L6014 AT KEMPT RD PRIMARY FAILED
TUFTS COVE UNITS TRIP
FILE: a117.1F-I6014_104H_3ph_recl-2013WP-NS-import-200.out
CHNL#S 10.4: [ANGL190472 [BLLDNG2 19.000] [1]] [ANGL156661 [DARL G1 22.000] [1]
CHNL#S 6.4: [ANGL190456 [LEPRG1 26.000] [1]] [ANGL156661 [DARL G1 22.000] [1]
CHNL#S 5.4: [ANGL190450 [MACTG1 13.800] [1]] [ANGL156661 [DARL G1 22.000] [1]
CHNL#S 3.4: [ANGL126652 [RAV 3 22.000] [1]] [ANGL156661 [DARL G1 22.000] [1]
CHNL#S 2.4: [ANGL101063 [MYST G7 22.000] [1]] [ANGL156661 [DARL G1 22.000] [1]
CHNL#S 1.4: [ANGL100060 [MIS GT1 18.000] [1]] [ANGL156661 [DARL G1 22.000] [1]
TUE, JAN 27 2009 15:55
TIME (SECONDS)
"NE,NY,NB ANGLE"

2013 WINTER PEAK STORA 167, NS LOAD 2371
NS-NB=-200; NB-NE=300; CBX=543; ONI=773 ONS=863
3 PHASE FAULT ON L6014 AT KEMPT RD PRIMARY FAILED
TUFTS COVE UNITS TRIP
FILE: a117.1F-I6014_104H_3ph_recl-2013WP-NS-import-200.out
CHNL# 59: [POWER199169 [TUFTCV3 14.400] [3]]
CHNL# 56: [POWER199086 [TRENTON613.800] [6]]
CHNL# 55: [POWER199085 [TRENTN5 13.800] [5]]
CHNL# 54: [POWER199061 [TMP1 STO13.800] [1]]
CHNL# 52: [POWER199043 [ACONIG1 20.000] [1]]
CHNL# 50: [POWER199001 [LINGAN1 14.400] [1]]
TUE, JAN 27 2009 15:55
TIME (SECONDS)
NS MW

2013 WINTER PEAK STORA 167, NS LOAD 2371
NS-NB=-200; NB-NE=300; CBX=543; ONI=773 ONS=863
3 PHASE FAULT ON L6014 AT KEMPT RD PRIMARY FAILED
TUFTS COVE UNITS TRIP
FILE: a117.1F-I6014_104H_3ph_recl-2013WP-NS-import-200.out
CHNL# 49: [POWER190472 [BLLDNG2 19.000] [1]]
CHNL# 45: [POWER190456 [LEPRG1 26.000] [1]]
CHNL# 44: [POWER190450 [MACTG1 13.800] [1]]
CHNL# 42: [POWER126652 [RAV 3 22.000] [1]]
CHNL# 41: [POWER101063 [MYST G7 22.000] [1]]
CHNL# 40: [POWER100060 [MIS GT1 18.000] [1]]
TUE, JAN 27 2009 15:55
TIME (SECONDS)
"NE,NY,NB POWER"

2013 WINTER PEAK STORA 167, NS LOAD 2371
NS-NB=-200; NB-NE=300; CBX=543; ONI=773 ONS=863
3 PHASE FAULT ON L6014 AT KEMPT RD PRIMARY FAILED
TUFTS COVE UNITS TRIP
FILE: a117.1F-I6014_104H_3ph_recl-2013WP-NS-import-200.out
CHNL# 119: [VARS IR141-DIGBY]
CHNL# 118: [VARS IR137-STATIA]
CHNL# 117: [VARS IR114-GLENDHU]
CHNL# 116: [VARS IR84-DALHOUSIE]
CHNL# 115: [VARS IR82_NUTTBY]
CHNL# 114: [VARS IR45_AMHERST]
TIME (SECONDS)
TUE, JAN 27 2009 15:55
NS WIND MV

2013 WINTER PEAK STORA 167, NS LOAD 2371
NS-NB=-200; NB-NE=300; CBX=543; ONI=773 ONS=863
3 PHASE FAULT ON L6014 AT KEMPT RD PRIMARY FAILED
TUFTS COVE UNITS TRIP
FILE: a117.1F-I6014_104H_3ph_recl-2013WP-NS-import-200.out
CHNL# 79: [POWER IR141-DIGBY]
CHNL# 78: [POWER IR137-STATIA]
CHNL# 77: [POWER IR114-GLENDHU]
CHNL# 76: [POWER IR84-DALHOUSIE]
CHNL# 75: [POWER IR82_NUTTBY]
CHNL# 74: [POWER IR45_AMHERST]
TIME (SECONDS)
TUE, JAN 27 2009 15:55
NS WIND MW

2013 WINTER PEAK STORA 167, NS LOAD 2371
NS-NB=-200; NB-NE=300; CBX=543; ONI=773 ONS=863
3 PHASE FAULT ON L6014 AT KEMPT RD PRIMARY FAILED
TUFTS COVE UNITS TRIP
FILE: a117.1F-I6014_104H_3ph_recl-2013WP-NS-import-200.out
CHNL# 133: [VOLT199125 IONSLOW 345.00]
CHNL# 132: [VOLT199120 IHOPEWELL345.00]
CHNL# 131: [VOLT199045 IWOODBINE345.00]
CHNL# 130: [VOLT190320 ISALBRY 345.00]
CHNL# 128: [VOLT190004 IKESWICK 345.00]
CHNL# 127: [VOLT 70002 IORRINGTN345.00]
TIME (SECONDS)
TUE, JAN 27 2009 15:55
"345KV VOLTAGE"

2013 WINTER PEAK STORA 167, NS LOAD 2371
NS-NB=-200; NB-NE=300; CBX=543; ONI=773 ONS=863
3 PHASE FAULT ON L6014 AT KEMPT RD PRIMARY FAILED
TUFTS COVE UNITS TRIP
FILE: a117.1F-I6014_104H_3ph_recl-2013WP-NS-import-200.out
CHNL# 125: 60*(1+[FREQ199125 IONSLOW 345.00])
CHNL# 124: 60*(1+[FREQ199120 IHOPEWELL345.00])
CHNL# 123: 60*(1+[FREQ199045 IWOODBINE345.00])
CHNL# 122: 60*(1+[FREQ190320 ISALBRY 345.00])
CHNL# 121: 60*(1+[FREQ190197 IC.COVE 345.00])
CHNL# 120: 60*(1+[FREQ 70002 IORRINGTN345.00])
TIME (SECONDS)
TUE, JAN 27 2009 15:55
FREQUENCY HZ

2013 WINTER PEAK STORA 167, NS LOAD 2371
NS-NB=-200; NB-NE=300; CBX=543; ONI=773 ONS=863
3 PHASE FAULT ON L6014 AT KEMPT RD PRIMARY FAILED
TUFTS COVE UNITS TRIP
FILE: a117.1F-l6014_104H_3ph_recl-2013WP-NS-import-200.out
CHNL# 146: [VOLT199280 [TUSKET A138.00]]
CHNL# 145: [VOLT199193 [HWAS 138.00]]
CHNL# 144: [VOLT199165 [TUFT COVE138.00]]
CHNL# 143: [VOLT199138 [SPRNGHILL138.00]]
CHNL# 142: [VOLT199090 [50N-TREN138.00]]
CHNL# 141: [VOLT199051 [HASTINGS138.00]]
TIME (SECONDS)
TUE, JAN 27 2009 15:55
138KV BUS VOLTS

2013 WINTER PEAK STORA 167, NS LOAD 2371
NS-NB=-200; NB-NE=300; CBX=543; ONI=773 ONS=863
3 PHASE FAULT ON L6014 AT KEMPT RD PRIMARY FAILED
TUFTS COVE UNITS TRIP
FILE: a117.1F-l6014_104H_3ph_recl-2013WP-NS-import-200.out
CHNL# 140: [VOLT199240 [BWATER A230.00]]
CHNL# 139: [VOLT199200 [BRUSHY 230.00]]
CHNL# 138: [VOLT199130 [ONSLOW 230.00]]
CHNL# 137: [VOLT199050 [HASTINGS230.00]]
CHNL# 136: [VOLT199044 [PT.ACONI230.00]]
CHNL# 135: [VOLT199000 [LINGAN 230.00]]
TIME (SECONDS)
TUE, JAN 27 2009 15:55
230KV BUS VOLTS

2013 WINTER PEAK STORA 167, NS LOAD 2371
NS-NB=-200; NB-NE=300; CBX=543; ONI=773 ONS=863
3 PHASE FAULT ON L6014 AT KEMPT RD PRIMARY FAILED
TUFTS COVE UNITS TRIP
FILE: a117.1F-l6014_104H_3ph_recl-2013WP-NS-import-200.out
CHNL# 217: [L6533MW]
CHNL# 215: [L6503MW]
CHNL# 197: [L8003MW]
CHNL# 195: [L8004MW]
CHNL# 193: [L8001MW]
CHNL# 221: [L3001MW]
TIME (SECONDS)
TUE, JAN 27 2009 15:55
LINE FLOW MW

2013 WINTER PEAK STORA 167, NS LOAD 2371
NS-NB=-200; NB-NE=300; CBX=543; ONI=773 ONS=863
3 PHASE FAULT ON L6014 AT KEMPT RD PRIMARY FAILED
TUFTS COVE UNITS TRIP
FILE: a117.1F-l6014_104H_3ph_recl-2013WP-NS-import-200.out
CHNL# 154: [IR141-DIGBYH69.0 VOLTS]
CHNL# 153: [IR137-STATIG25.0 VOLTS]
CHNL# 152: [IR114-GLENDH138.0 VOLTS]
CHNL# 151: [IR84-DALHOHV230.0 VOLTS]
CHNL# 150: [IR82 NUTBHV69.0 VOLTS]
CHNL# 149: [IR45 AMHERTP138.0 VOLTS]
TIME (SECONDS)
TUE, JAN 27 2009 15:55
WIND BUS VOLTS

2013 WINTER PEAK STORA 167, NS LOAD 2371
NS-NB=-200; NB-NE=300; CBX=543; ONI=773 ONS=863
3 PHASE FAULT ON L6035 AT WATER ST
CLEARED IN 6 CYCLES
FILE: a118-l6035_1H_3ph_nrecl-2013WP-NS-import-200.out
CHNL# 20: [ANGL199169 [TUFTCV3 14.400] [3]] [ANGL156661 [DARL G1 22.000] [1
CHNL# 17: [ANGL199086 [TRENTON613.800] [6]] [ANGL156661 [DARL G1 22.000] [1
CHNL# 16: [ANGL199085 [TRENTN5 13.800] [5]] [ANGL156661 [DARL G1 22.000] [1
CHNL# 15: [ANGL199061 [TMP1 STO13.800] [1]] [ANGL156661 [DARL G1 22.000] [1
CHNL# 13: [ANGL199043 [ACONIG1 20.000] [1]] [ANGL156661 [DARL G1 22.000] [1
CHNL# 11: [ANGL199001 [LINGAN1 14.400] [1]] [ANGL156661 [DARL G1 22.000] [1
TIME (SECONDS)
TUE, JAN 27 2009 15:55
NS ANGLE

2013 WINTER PEAK STORA 167, NS LOAD 2371
NS-NB=-200; NB-NE=300; CBX=543; ONI=773 ONS=863
3 PHASE FAULT ON L6035 AT WATER ST
CLEARED IN 6 CYCLES
FILE: a118-l6035_1H_3ph_nrecl-2013WP-NS-import-200.out
CHNL# 10: [ANGL190472 [BLLDNG2 19.000] [1]] [ANGL156661 [DARL G1 22.000] [1
CHNL# 6: [ANGL190456 [LEPRG1 26.000] [1]] [ANGL156661 [DARL G1 22.000] [1
CHNL# 5: [ANGL190450 [MACTG1 13.800] [1]] [ANGL156661 [DARL G1 22.000] [1
CHNL# 3: [ANGL126652 [RAV 3 22.000] [1]] [ANGL156661 [DARL G1 22.000] [1
CHNL# 2: [ANGL101063 [MYST G7 22.000] [1]] [ANGL156661 [DARL G1 22.000] [1
CHNL# 1: [ANGL100060 [MIS GT1 18.000] [1]] [ANGL156661 [DARL G1 22.000] [1
TIME (SECONDS)
TUE, JAN 27 2009 15:55
"NE,NY,NB ANGLE"

2013 WINTER PEAK STORA 167, NS LOAD 2371
NS-NB=-200; NB-NE=300; CBX=543; ONI=773 ONS=863
3 PHASE FAULT ON L6035 AT WATER ST
CLEARED IN 6 CYCLES
FILE: a118-l6035_1H_3ph_nrecl-2013WP-NS-import-200.out
CHNL# 59: [POWER199169 [TUFTCV3 14.400] [3]]
CHNL# 56: [POWER199086 [TRENTON613.800] [6]]
CHNL# 55: [POWER199085 [TRENTN5 13.800] [5]]
CHNL# 54: [POWER199061 [TMP1 STO13.800] [1]]
CHNL# 52: [POWER199043 [ACONIG1 20.000] [1]]
CHNL# 50: [POWER199001 [LINGAN1 14.400] [1]]
TIME (SECONDS)
TUE, JAN 27 2009 15:55
NS MW

2013 WINTER PEAK STORA 167, NS LOAD 2371
NS-NB=-200; NB-NE=300; CBX=543; ONI=773 ONS=863
3 PHASE FAULT ON L6035 AT WATER ST
CLEARED IN 6 CYCLES
FILE: a118-l6035_1H_3ph_nrecl-2013WP-NS-import-200.out
CHNL# 49: [POWER190472 [BLLDNG2 19.000] [1]]
CHNL# 45: [POWER190456 [LEPRG1 26.000] [1]]
CHNL# 44: [POWER190450 [MACTG1 13.800] [1]]
CHNL# 42: [POWER126652 [RAV 3 22.000] [1]]
CHNL# 41: [POWER101063 [MYST G7 22.000] [1]]
CHNL# 40: [POWER100060 [MIS GT1 18.000] [1]]
TIME (SECONDS)
TUE, JAN 27 2009 15:55
"NE,NY,NB POWER"

2013 WINTER PEAK STORA 167, NS LOAD 2371
NS-NB=-200; NB-NE=300; CBX=543; ONI=773 ONS=863
3 PHASE FAULT ON L6035 AT WATER ST
CLEARED IN 6 CYCLES
FILE: a118-l6035_1H_3ph_nrecl-2013WP-NS-import-200.out
CHNL# 119: [VARS IR141-DIGBY]
CHNL# 118: [VARS IR137-STATIA]
CHNL# 117: [VARS IR114-GLENDHU]
CHNL# 116: [VARS IR84-DALHOUSIE]
CHNL# 115: [VARS IR82_NUTTBY]
CHNL# 114: [VARS IR45_AMHERST]
TIME (SECONDS)
TUE, JAN 27 2009 15:55
NS WIND MV

2013 WINTER PEAK STORA 167, NS LOAD 2371
NS-NB=-200; NB-NE=300; CBX=543; ONI=773 ONS=863
3 PHASE FAULT ON L6035 AT WATER ST
CLEARED IN 6 CYCLES
FILE: a118-l6035_1H_3ph_nrecl-2013WP-NS-import-200.out
CHNL# 79: [POWER IR141-DIGBY]
CHNL# 78: [POWER IR137-STATIA]
CHNL# 77: [POWER IR114-GLENDHU]
CHNL# 76: [POWER IR84-DALHOUSIE]
CHNL# 75: [POWER IR82_NUTTBY]
CHNL# 74: [POWER IR45_AMHERST]
TIME (SECONDS)
TUE, JAN 27 2009 15:55
NS WIND MW

2013 WINTER PEAK STORA 167, NS LOAD 2371
NS-NB=-200; NB-NE=300; CBX=543; ONI=773 ONS=863
3 PHASE FAULT ON L6035 AT WATER ST
CLEARED IN 6 CYCLES
FILE: a118-l6035_1H_3ph_nrecl-2013WP-NS-import-200.out
CHNL# 133: [VOLT199125 [ONSLOW 345.00]]
CHNL# 132: [VOLT199120 [HOPEWELL 345.00]]
CHNL# 131: [VOLT199045 [WOODBINE345.00]]
CHNL# 130: [VOLT190320 [SALBRY 345.00]]
CHNL# 128: [VOLT190004 [KESWICK 345.00]]
CHNL# 127: [VOLT 70002 [ORRINGTN345.00]]
TIME (SECONDS)
TUE, JAN 27 2009 15:55
"345KV VOLTAGE"

2013 WINTER PEAK STORA 167, NS LOAD 2371
NS-NB=-200; NB-NE=300; CBX=543; ONI=773 ONS=863
3 PHASE FAULT ON L6035 AT WATER ST
CLEARED IN 6 CYCLES
FILE: a118-l6035_1H_3ph_nrecl-2013WP-NS-import-200.out
CHNL# 125: 60*(1+[FREQ199125 [ONSLOW 345.00]])
CHNL# 124: 60*(1+[FREQ199120 [HOPEWELL 345.00]])
CHNL# 123: 60*(1+[FREQ199045 [WOODBINE345.00]])
CHNL# 122: 60*(1+[FREQ190320 [SALBRY 345.00]])
CHNL# 121: 60*(1+[FREQ190197 [C.COVE 345.00]])
CHNL# 120: 60*(1+[FREQ 70002 [ORRINGTN345.00]])
TIME (SECONDS)
TUE, JAN 27 2009 15:55
FREQUENCY HZ

2013 WINTER PEAK STORA 167, NS LOAD 2371
NS-NB=-200; NB-NE=300; CBX=543; ONI=773 ONS=863
3 PHASE FAULT ON L6035 AT WATER ST
CLEARED IN 6 CYCLES
FILE: a118-l6035_1H_3ph_nrecl-2013WP-NS-import-200.out
CHNL# 146: [VOLT199280 [TUSKET A138.00]]
CHNL# 145: [VOLT199193 [HWAS 138.00]]
CHNL# 144: [VOLT199165 [TUFTCOVE138.00]]
CHNL# 143: [VOLT199135 [SPRNGHILL138.00]]
CHNL# 142: [VOLT199090 [SON-TREN138.00]]
CHNL# 141: [VOLT199051 [HASTINGS138.00]]
1.2000
0.70000
0.0
1.0000
2.0000
3.0000
4.0000
5.0000
6.0000
7.0000
8.0000
9.0000
10.000
TIME (SECONDS)
TUE, JAN 27 2009 15:55
138KV BUS VOLTS

2013 WINTER PEAK STORA 167, NS LOAD 2371
NS-NB=-200; NB-NE=300; CBX=543; ONI=773 ONS=863
3 PHASE FAULT ON L6035 AT WATER ST
CLEARED IN 6 CYCLES
FILE: a118-l6035_1H_3ph_nrecl-2013WP-NS-import-200.out
CHNL# 140: [VOLT199240 [BWATER A230.00]]
CHNL# 139: [VOLT199200 [BRUSHY 230.00]]
CHNL# 138: [VOLT199130 [ONSLOW 230.00]]
CHNL# 137: [VOLT199050 [HASTINGS230.00]]
CHNL# 136: [VOLT199044 [PT.ACONI230.00]]
CHNL# 135: [VOLT199000 [LINGAN 230.00]]
1.2000
0.70000
0.0
1.0000
2.0000
3.0000
4.0000
5.0000
6.0000
7.0000
8.0000
9.0000
10.000
TIME (SECONDS)
TUE, JAN 27 2009 15:55
230KV BUS VOLTS

2013 WINTER PEAK STORA 167, NS LOAD 2371
NS-NB=-200; NB-NE=300; CBX=543; ONI=773 ONS=863
3 PHASE FAULT ON L6035 AT WATER ST
CLEARED IN 6 CYCLES
FILE: a118-l6035_1H_3ph_nrecl-2013WP-NS-import-200.out
CHNL# 217: [L6513NMW]
CHNL# 215: [L6503MW1]
CHNL# 197: [L8003MW1]
CHNL# 195: [L8004MW1]
CHNL# 193: [L8001MW1]
CHNL# 221: [L3001MW1]
250.00
-250.0
500.00
0.0
1000.0
-1000.
0.0
1.0000
2.0000
3.0000
4.0000
5.0000
6.0000
7.0000
8.0000
9.0000
10.000
TIME (SECONDS)
TUE, JAN 27 2009 15:55
LINE FLOW MW

2013 WINTER PEAK STORA 167, NS LOAD 2371
NS-NB=-200; NB-NE=300; CBX=543; ONI=773 ONS=863
3 PHASE FAULT ON L6035 AT WATER ST
CLEARED IN 6 CYCLES
FILE: a118-l6035_1H_3ph_nrecl-2013WP-NS-import-200.out
CHNL# 154: [IR141-DIGBYH69.0 VOLTS]
CHNL# 153: [IR137-STATIG25.0 VOLTS]
CHNL# 152: [IR114-GLENDH138.0 VOLTS]
CHNL# 151: [IR84-DALHOHV230.0 VOLTS]
CHNL# 150: [IR82_NUTBHV69.0 VOLTS]
CHNL# 149: [IR45_AMHERTP138.0 VOLTS]
1.2000
0.70000
0.0
1.0000
2.0000
3.0000
4.0000
5.0000
6.0000
7.0000
8.0000
9.0000
10.000
TIME (SECONDS)
TUE, JAN 27 2009 15:55
WIND BUS VOLTS

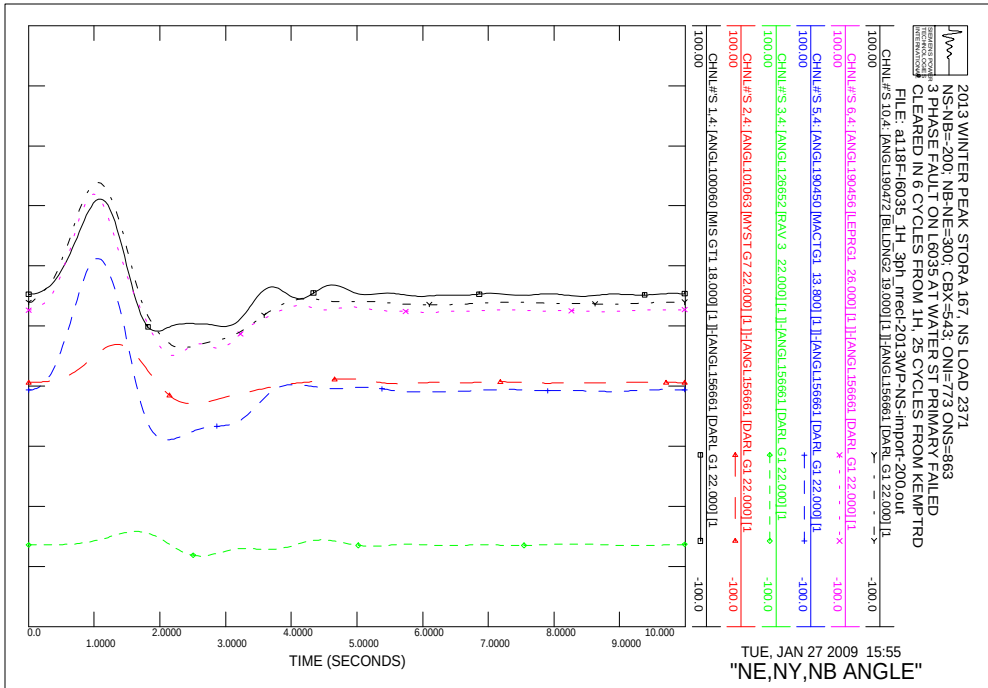
2013 WINTER PEAK STORA 167, NS LOAD 2371
NS-NB=-200; NB-NE=300; CBX=543; ONI=773 ONS=863
3 PHASE FAULT ON L6035 AT WATER ST PRIMARY FAILED
CLEARED IN 6 CYCLES FROM 1H, 25 CYCLES FROM KEMPTRD
FILE: a118F-l6035_1H_3ph_nrecl-2013WP-NS-import-200.out
CHNL#'S 10,4: [ANGL190472 [BLLDNG2 19.000] [1]]-[ANGL156661 [DARL G1 22.000] [1
CHNL#'S 6,4: [ANGL190456 [LEPRG1 26.000] [1]]-[ANGL156661 [DARL G1 22.000] [1
CHNL#'S 5,4: [ANGL190450 [MACTG1 13.800] [1]]-[ANGL156661 [DARL G1 22.000] [1
CHNL#'S 3,4: [ANGL126652 [RAV 3 22.000] [1]]-[ANGL156661 [DARL G1 22.000] [1
CHNL#'S 2,4: [ANGL101063 [MYST G7 22.000] [1]]-[ANGL156661 [DARL G1 22.000] [1
CHNL#'S 1,4: [ANGL100060 [MIS GT1 18.000] [1]]-[ANGL156661 [DARL G1 22.000] [1
100.00
-100.0
TIME (SECONDS)
TUE, JAN 27 2009 15:55
"NE,NY,NB ANGLE"

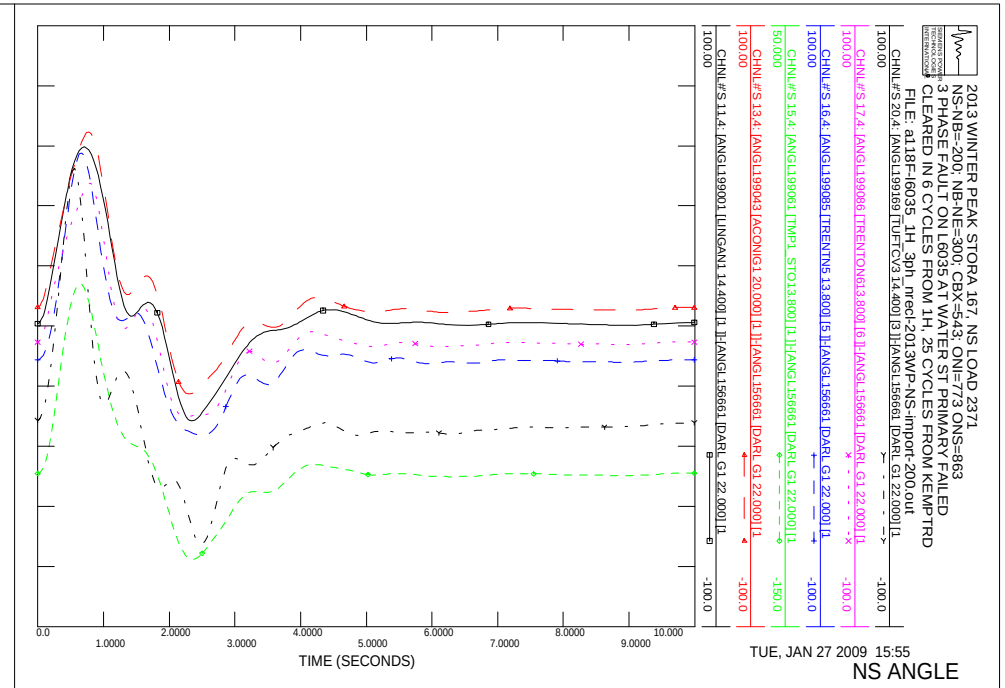
2013 WINTER PEAK STORA 167, NS LOAD 2371
NS-NB=-200; NB-NE=300; CBX=543; ONI=773 ONS=863
3 PHASE FAULT ON L6035 AT WATER ST PRIMARY FAILED
CLEARED IN 6 CYCLES FROM 1H, 25 CYCLES FROM KEMPTRD
FILE: a118F-l6035_1H_3ph_nrecl-2013WP-NS-import-200.out
CHNL#'S 20,4: [ANGL199169 [TUFTCV3 14.400] [3]]-[ANGL156661 [DARL G1 22.000] [1
CHNL#'S 17,4: [ANGL199086 [TRENTON613.800] [6]]-[ANGL156661 [DARL G1 22.000] [1
CHNL#'S 16,4: [ANGL199085 [TRENTN5 13.800] [5]]-[ANGL156661 [DARL G1 22.000] [1
CHNL#'S 15,4: [ANGL199061 [TMP1 STO13.800] [1]]-[ANGL156661 [DARL G1 22.000] [1
CHNL#'S 13,4: [ANGL199043 [ACONIG1 20.000] [1]]-[ANGL156661 [DARL G1 22.000] [1
CHNL#'S 11,4: [ANGL199001 [LINGAN1 14.400] [1]]-[ANGL156661 [DARL G1 22.000] [1
100.00
-100.0
TIME (SECONDS)
TUE, JAN 27 2009 15:55
NS ANGLE

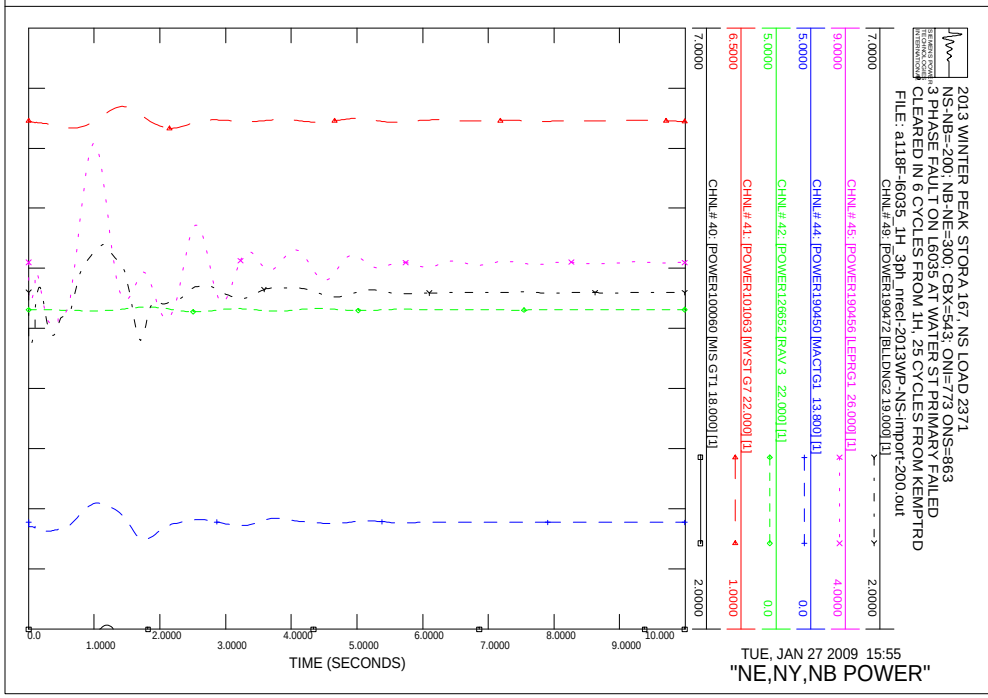
2013 WINTER PEAK STORA 167, NS LOAD 2371
NS-NB=-200; NB-NE=300; CBX=543; ONI=773 ONS=863
3 PHASE FAULT ON L6035 AT WATER ST PRIMARY FAILED
CLEARED IN 6 CYCLES FROM 1H, 25 CYCLES FROM KEMPTRD
FILE: a118F-l6035_1H_3ph_nrecl-2013WP-NS-import-200.out
CHNL# 49: [POWER190472 [BLLDNG2 19.000] [1]
CHNL# 45: [POWER190456 [LEPRG1 26.000] [1]
CHNL# 44: [POWER190450 [MACTG1 13.800] [1]
CHNL# 42: [POWER126652 [RAV 3 22.000] [1]
CHNL# 41: [POWER101063 [MYST G7 22.000] [1]
CHNL# 40: [POWER100060 [MIS GT1 18.000] [1]
7.0000
2.0000
TIME (SECONDS)
TUE, JAN 27 2009 15:55
"NE,NY,NB POWER"

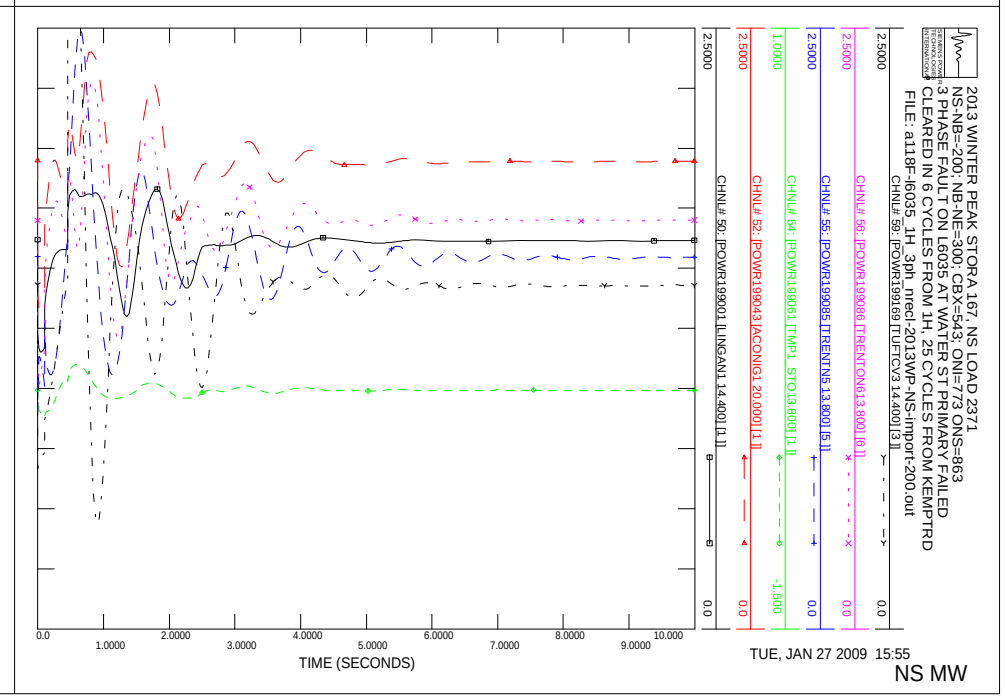
2013 WINTER PEAK STORA 167, NS LOAD 2371
NS-NB=-200; NB-NE=300; CBX=543; ONI=773 ONS=863
3 PHASE FAULT ON L6035 AT WATER ST PRIMARY FAILED
CLEARED IN 6 CYCLES FROM 1H, 25 CYCLES FROM KEMPTRD
FILE: a118F-l6035_1H_3ph_nrecl-2013WP-NS-import-200.out
CHNL# 59: [POWR199169 [TUFTCV3 14.400] [3]]
CHNL# 56: [POWR199086 [TRENTON613.800] [6]]
CHNL# 55: [POWR199085 [TRENTN5 13.800] [5]]
CHNL# 54: [POWR199061 [TMP1 STO13.800] [1]]
CHNL# 52: [POWR199043 [ACONIG1 20.000] [1]]
CHNL# 50: [POWR199001 [LINGAN1 14.400] [1]]
2.5000
0.0
TIME (SECONDS)
TUE, JAN 27 2009 15:55
NS MW

2013 WINTER PEAK STORA 167, NS LOAD 2371
NS-NB=-200; NB-NE=300; CBX=543; ONI=773 ONS=863
3 PHASE FAULT ON L6035 AT WATER ST PRIMARY FAILED
CLEARED IN 6 CYCLES FROM 1H, 25 CYCLES FROM KEMPTRD
FILE: a118F-l6035_1H_3ph_mrecl-2013WP-NS-import-200.out
CHNL# 119: [VARS IR141-DIGBY]
CHNL# 118: [VARS IR137-STATIA]
CHNL# 117: [VARS IR114-GLENDHU]
CHNL# 116: [VARS IR84-DALHOUSIE]
CHNL# 115: [VARS IR82_NUTTBY]
CHNL# 114: [VARS IR45_AMHERST]
TIME (SECONDS)
TUE, JAN 27 2009 15:55
NS WIND MV

2013 WINTER PEAK STORA 167, NS LOAD 2371
NS-NB=-200; NB-NE=300; CBX=543; ONI=773 ONS=863
3 PHASE FAULT ON L6035 AT WATER ST PRIMARY FAILED
CLEARED IN 6 CYCLES FROM 1H, 25 CYCLES FROM KEMPTRD
FILE: a118F-l6035_1H_3ph_mrecl-2013WP-NS-import-200.out
CHNL# 79: [POWER IR141-DIGBY]
CHNL# 78: [POWER IR137-STATIA]
CHNL# 77: [POWER IR114-GLENDHU]
CHNL# 76: [POWER IR84-DALHOUSIE]
CHNL# 75: [POWER IR82_NUTTBY]
CHNL# 74: [POWER IR45_AMHERST]
TIME (SECONDS)
TUE, JAN 27 2009 15:55
NS WIND MW

2013 WINTER PEAK STORA 167, NS LOAD 2371
NS-NB=-200; NB-NE=300; CBX=543; ONI=773 ONS=863
3 PHASE FAULT ON L6035 AT WATER ST PRIMARY FAILED
CLEARED IN 6 CYCLES FROM 1H, 25 CYCLES FROM KEMPTRD
FILE: a118F-l6035_1H_3ph_mrecl-2013WP-NS-import-200.out
CHNL# 133: [VOLT199125 [ONSLOW 345.00]]
CHNL# 132: [VOLT199120 [HOPEWELL 345.00]]
CHNL# 131: [VOLT199045 [WOODBINE345.00]]
CHNL# 130: [VOLT190320 [SALBRY 345.00]]
CHNL# 128: [VOLT190004 [KESWICK 345.00]]
CHNL# 127: [VOLT 70002 [ORRINGTN345.00]]
TIME (SECONDS)
TUE, JAN 27 2009 15:55
"345KV VOLTAGE"

2013 WINTER PEAK STORA 167, NS LOAD 2371
NS-NB=-200; NB-NE=300; CBX=543; ONI=773 ONS=863
3 PHASE FAULT ON L6035 AT WATER ST PRIMARY FAILED
CLEARED IN 6 CYCLES FROM 1H, 25 CYCLES FROM KEMPTRD
FILE: a118F-l6035_1H_3ph_mrecl-2013WP-NS-import-200.out
CHNL# 125: 60*(1+[FREQ199125 [ONSLOW 345.00]])
CHNL# 124: 60*(1+[FREQ199120 [HOPEWELL 345.00]])
CHNL# 123: 60*(1+[FREQ199045 [WOODBINE345.00]])
CHNL# 122: 60*(1+[FREQ190320 [SALBRY 345.00]])
CHNL# 121: 60*(1+[FREQ190197 [C.COVE 345.00]])
CHNL# 120: 60*(1+[FREQ 70002 [ORRINGTN345.00]])
TIME (SECONDS)
TUE, JAN 27 2009 15:55
FREQUENCY HZ

2013 WINTER PEAK STORA 167, NS LOAD 2371
NS-NB=-200; NB-NE=300; CBX=543; ONI=773 ONS=863
3 PHASE FAULT ON L6035 AT WATER ST PRIMARY FAILED
CLEARED IN 6 CYCLES FROM 1H, 25 CYCLES FROM KEMPTRD
FILE: a118F-l6035_1H_3ph_mrecl-2013WP-NS-import-200.out
CHNL# 146: [VOLT199280 [TUSKET A138.00]]
CHNL# 145: [VOLT199193 [1H-WAS 138.00]]
CHNL# 144: [VOLT199165 [TUFTCOVE138.00]]
CHNL# 143: [VOLT199138 [SPRNGHIL138.00]]
CHNL# 142: [VOLT199090 [50N-TREN138.00]]
CHNL# 141: [VOLT199051 [HASTINGS138.00]]
TIME (SECONDS)
TUE, JAN 27 2009 15:55
138KV BUS VOLTS

2013 WINTER PEAK STORA 167, NS LOAD 2371
NS-NB=-200; NB-NE=300; CBX=543; ONI=773 ONS=863
3 PHASE FAULT ON L6035 AT WATER ST PRIMARY FAILED
CLEARED IN 6 CYCLES FROM 1H, 25 CYCLES FROM KEMPTRD
FILE: a118F-l6035_1H_3ph_mrecl-2013WP-NS-import-200.out
CHNL# 140: [VOLT199240 [BWATER A230.00]]
CHNL# 139: [VOLT199200 [BRUSHY 230.00]]
CHNL# 138: [VOLT199130 [ONSLOW 230.00]]
CHNL# 137: [VOLT199050 [HASTINGS230.00]]
CHNL# 136: [VOLT199044 [PT.ACONI230.00]]
CHNL# 135: [VOLT199000 [LINGAN 230.00]]
TIME (SECONDS)
TUE, JAN 27 2009 15:55
230KV BUS VOLTS

2013 WINTER PEAK STORA 167, NS LOAD 2371
NS-NB=-200; NB-NE=300; CBX=543; ONI=773 ONS=863
3 PHASE FAULT ON L6035 AT WATER ST PRIMARY FAILED
CLEARED IN 6 CYCLES FROM 1H, 25 CYCLES FROM KEMPTRD
FILE: a118F-l6035_1H_3ph_mrecl-2013WP-NS-import-200.out
CHNL# 217: [L6533NMW]
CHNL# 215: [L6503MW]
CHNL# 197: [L8003MW]
CHNL# 195: [L8004MW]
CHNL# 193: [L8001MW]
CHNL# 221: [L3001MW]
TIME (SECONDS)
TUE, JAN 27 2009 15:55
LINE FLOW MW

2013 WINTER PEAK STORA 167, NS LOAD 2371
NS-NB=-200; NB-NE=300; CBX=543; ONI=773 ONS=863
3 PHASE FAULT ON L6035 AT WATER ST PRIMARY FAILED
CLEARED IN 6 CYCLES FROM 1H, 25 CYCLES FROM KEMPTRD
FILE: a118F-l6035_1H_3ph_mrecl-2013WP-NS-import-200.out
CHNL# 154: [IR141-DIGBYH69.0 VOLTS]
CHNL# 153: [IR137-STATIG25.0 VOLTS]
CHNL# 152: [IR114-GLENDH138.0 VOLTS]
CHNL# 151: [IR84-DALHOHV230.0 VOLTS]
CHNL# 150: [IR82_NUTBHV69.0 VOLTS]
CHNL# 149: [IR45_AMHERTP138.0 VOLTS]
TIME (SECONDS)
TUE, JAN 27 2009 15:55
WIND BUS VOLTS

2013 WINTER PEAK STORA 167, NS LOAD 2371
NS-NB=-200; NB-NE=300; CBX=543; ONI=773 ONS=863
3 PHASE FAULT ON L6007 AT BURNSIDE
CLEARED IN 6 CYCLES FROM BURNSIDE
FILE: a119-l6007_108H_3ph_recl-2013WP-NS-import-200.out
CHNL# 20: [ANGL199169 [TUFTCV3 14.400] [3]] [ANGL156661 [DARL G1 22.000] [1]
CHNL# 17: [ANGL199086 [TRENTON613.800] [6]] [ANGL156661 [DARL G1 22.000] [1]
CHNL# 16: [ANGL199085 [TRENTN5 13.800] [5]] [ANGL156661 [DARL G1 22.000] [1]
CHNL# 15: [ANGL199061 [TMP1 STO13.800] [1]] [ANGL156661 [DARL G1 22.000] [1]
CHNL# 13: [ANGL199043 [ACONIG1 20.000] [1]] [ANGL156661 [DARL G1 22.000] [1]
CHNL# 11: [ANGL199001 [LINGAN1 14.400] [1]] [ANGL156661 [DARL G1 22.000] [1]
TIME (SECONDS)
TUE, JAN 27 2009 15:55
NS ANGLE

2013 WINTER PEAK STORA 167, NS LOAD 2371
NS-NB=-200; NB-NE=300; CBX=543; ONI=773 ONS=863
3 PHASE FAULT ON L6007 AT BURNSIDE
CLEARED IN 6 CYCLES FROM BURNSIDE
FILE: a119-l6007_108H_3ph_recl-2013WP-NS-import-200.out
CHNL# 10: [ANGL190472 [BLLDNG2 19.000] [1]] [ANGL156661 [DARL G1 22.000] [1]
CHNL# 6: [ANGL190456 [LEPRG1 26.000] [1]] [ANGL156661 [DARL G1 22.000] [1]
CHNL# 5: [ANGL190450 [MACTG1 13.800] [1]] [ANGL156661 [DARL G1 22.000] [1]
CHNL# 3: [ANGL126652 [RAV 3 22.000] [1]] [ANGL156661 [DARL G1 22.000] [1]
CHNL# 2: [ANGL101063 [MYST G7 22.000] [1]] [ANGL156661 [DARL G1 22.000] [1]
CHNL# 1: [ANGL100060 [MIS GT1 18.000] [1]] [ANGL156661 [DARL G1 22.000] [1]
TIME (SECONDS)
TUE, JAN 27 2009 15:55
"NE,NY,NB ANGLE"

2013 WINTER PEAK STORA 167, NS LOAD 2371
NS-NB=-200; NB-NE=300; CBX=543; ONI=773 ONS=863
3 PHASE FAULT ON L6007 AT BURNSIDE
CLEARED IN 6 CYCLES FROM BURNSIDE
FILE: a119-l6007_108H_3ph_recl-2013WP-NS-import-200.out
CHNL# 59: [POWER199169 [TUFTCV3 14.400] [3]]
CHNL# 56: [POWER199086 [TRENTON613.800] [6]]
CHNL# 55: [POWER199085 [TRENTN5 13.800] [5]]
CHNL# 54: [POWER199061 [TMP1 STO13.800] [1]]
CHNL# 52: [POWER199043 [ACONIG1 20.000] [1]]
CHNL# 50: [POWER199001 [LINGAN1 14.400] [1]]
TIME (SECONDS)
TUE, JAN 27 2009 15:55
NS MW

2013 WINTER PEAK STORA 167, NS LOAD 2371
NS-NB=-200; NB-NE=300; CBX=543; ONI=773 ONS=863
3 PHASE FAULT ON L6007 AT BURNSIDE
CLEARED IN 6 CYCLES FROM BURNSIDE
FILE: a119-l6007_108H_3ph_recl-2013WP-NS-import-200.out
CHNL# 49: [POWER190472 [BLLDNG2 19.000] [1]]
CHNL# 45: [POWER190456 [LEPRG1 26.000] [1]]
CHNL# 44: [POWER190450 [MACTG1 13.800] [1]]
CHNL# 42: [POWER126652 [RAV 3 22.000] [1]]
CHNL# 41: [POWER101063 [MYST G7 22.000] [1]]
CHNL# 40: [POWER100060 [MIS GT1 18.000] [1]]
TIME (SECONDS)
TUE, JAN 27 2009 15:55
"NE,NY,NB POWER"

2013 WINTER PEAK STORA 167, NS LOAD 2371
NS-NB=-200; NB-NE=300; CBX=543; ONI=773 ONS=863
3 PHASE FAULT ON L6007 AT BURNSIDE
CLEARED IN 6 CYCLES FROM BURNSIDE
FILE: a119-l6007_108H_3ph_recl-2013WP-NS-import-200.out
CHNL# 119: [VARS IR141-DIGBY]
CHNL# 118: [VARS IR137-STATIA]
CHNL# 117: [VARS IR114-GLENDHU]
CHNL# 116: [VARS IR84-DALHOUSIE]
CHNL# 115: [VARS IR82_NUTTBY]
CHNL# 114: [VARS IR45_AMHERST]
TIME (SECONDS)
TUE, JAN 27 2009 15:55
NS WIND MV

2013 WINTER PEAK STORA 167, NS LOAD 2371
NS-NB=-200; NB-NE=300; CBX=543; ONI=773 ONS=863
3 PHASE FAULT ON L6007 AT BURNSIDE
CLEARED IN 6 CYCLES FROM BURNSIDE
FILE: a119-l6007_108H_3ph_recl-2013WP-NS-import-200.out
CHNL# 79: [POWER IR141-DIGBY]
CHNL# 78: [POWER IR137-STATIA]
CHNL# 77: [POWER IR114-GLENDHU]
CHNL# 76: [POWER IR84-DALHOUSIE]
CHNL# 75: [POWER IR82_NUTTBY]
CHNL# 74: [POWER IR45_AMHERST]
TIME (SECONDS)
TUE, JAN 27 2009 15:55
NS WIND MW

2013 WINTER PEAK STORA 167, NS LOAD 2371
NS-NB=-200; NB-NE=300; CBX=543; ONI=773 ONS=863
3 PHASE FAULT ON L6007 AT BURNSIDE
CLEARED IN 6 CYCLES FROM BURNSIDE
FILE: a119-l6007_108H_3ph_recl-2013WP-NS-import-200.out
CHNL# 133: [VOLT199125 [ONSLOW 345.00]]
CHNL# 132: [VOLT199120 [HOPEWELL 345.00]]
CHNL# 131: [VOLT199045 [WOODBINE345.00]]
CHNL# 130: [VOLT190320 [SALBRY 345.00]]
CHNL# 128: [VOLT190004 [KESWICK 345.00]]
CHNL# 127: [VOLT 70002 [ORRINGTN345.00]]
TIME (SECONDS)
TUE, JAN 27 2009 15:55
"345KV VOLTAGE"

2013 WINTER PEAK STORA 167, NS LOAD 2371
NS-NB=-200; NB-NE=300; CBX=543; ONI=773 ONS=863
3 PHASE FAULT ON L6007 AT BURNSIDE
CLEARED IN 6 CYCLES FROM BURNSIDE
FILE: a119-l6007_108H_3ph_recl-2013WP-NS-import-200.out
CHNL# 125: 60*(1+[FREQ199125 [ONSLOW 345.00]])
CHNL# 124: 60*(1+[FREQ199120 [HOPEWELL 345.00]])
CHNL# 123: 60*(1+[FREQ199045 [WOODBINE345.00]])
CHNL# 122: 60*(1+[FREQ190320 [SALBRY 345.00]])
CHNL# 121: 60*(1+[FREQ190197 [C.COVE 345.00]])
CHNL# 120: 60*(1+[FREQ 70002 [ORRINGTN345.00]])
TIME (SECONDS)
TUE, JAN 27 2009 15:55
FREQUENCY HZ

2013 WINTER PEAK STORA 167, NS LOAD 2371
NS-NB=-200; NB-NE=300; CBX=543; ONI=773 ONS=863
3 PHASE FAULT ON L6007 AT BURNSIDE
CLEARED IN 6 CYCLES FROM BURNSIDE
FILE: a119-l6007_108H_3ph_recl-2013WP-NS-import-200.out
CHNL# 146: [VOLT199280 [TUSKET A138.00]]
CHNL# 145: [VOLT199193 [HWAS 138.00]]
CHNL# 144: [VOLT199165 [TUFTCOVE138.00]]
CHNL# 143: [VOLT199135 [SPRNGHILL138.00]]
CHNL# 142: [VOLT199090 [SON-TREN138.00]]
CHNL# 141: [VOLT199051 [HASTINGS138.00]]
TIME (SECONDS)
TUE, JAN 27 2009 15:55
138KV BUS VOLTS

2013 WINTER PEAK STORA 167, NS LOAD 2371
NS-NB=-200; NB-NE=300; CBX=543; ONI=773 ONS=863
3 PHASE FAULT ON L6007 AT BURNSIDE
CLEARED IN 6 CYCLES FROM BURNSIDE
FILE: a119-l6007_108H_3ph_recl-2013WP-NS-import-200.out
CHNL# 140: [VOLT199240 [BWATER A230.00]]
CHNL# 139: [VOLT199200 [BRUSHY 230.00]]
CHNL# 138: [VOLT199130 [ONSLOW 230.00]]
CHNL# 137: [VOLT199050 [HASTINGS230.00]]
CHNL# 136: [VOLT199044 [PT.ACONI230.00]]
CHNL# 135: [VOLT199000 [LINGAN 230.00]]
TIME (SECONDS)
TUE, JAN 27 2009 15:55
230KV BUS VOLTS

2013 WINTER PEAK STORA 167, NS LOAD 2371
NS-NB=-200; NB-NE=300; CBX=543; ONI=773 ONS=863
3 PHASE FAULT ON L6007 AT BURNSIDE
CLEARED IN 6 CYCLES FROM BURNSIDE
FILE: a119-l6007_108H_3ph_recl-2013WP-NS-import-200.out
CHNL# 217: [L6533MW]
CHNL# 215: [L6503MW]
CHNL# 197: [L8003MW]
CHNL# 195: [L8004MW]
CHNL# 193: [L8001MW]
CHNL# 221: [L3001MW]
TIME (SECONDS)
TUE, JAN 27 2009 15:55
LINE FLOW MW

2013 WINTER PEAK STORA 167, NS LOAD 2371
NS-NB=-200; NB-NE=300; CBX=543; ONI=773 ONS=863
3 PHASE FAULT ON L6007 AT BURNSIDE
CLEARED IN 6 CYCLES FROM BURNSIDE
FILE: a119-l6007_108H_3ph_recl-2013WP-NS-import-200.out
CHNL# 154: [IR141-DIGBYH69.0 VOLTS]
CHNL# 153: [IR137-STATIG25.0 VOLTS]
CHNL# 152: [IR114-GLENDH138.0 VOLTS]
CHNL# 151: [IR84-DALHOHV230.0 VOLTS]
CHNL# 150: [IR82 NUTBHV69.0 VOLTS]
CHNL# 149: [IR45 AMHERTP138.0 VOLTS]
TIME (SECONDS)
TUE, JAN 27 2009 15:55
WIND BUS VOLTS

2013 WINTER PEAK STORA 167, NS LOAD 2371
NS-NB=-200; NB-NE=300; CBX=543; ONI=773 ONS=863
3 PHASE FAULT ON L6007 AT BURNSIDE PRIMARY PROTECTION FAILS
CLEARED IN 6 CYCLES FROM BURNSIDE
FILE: a119F-l6007_108H_3ph_rect-2013WP-NS-import-200.out
CHNL#S 20.4: [ANGL199169] [TUFTCV3 14.400] [3] [ANGL156661] [DARL G1 22.000] [1]
CHNL#S 17.4: [ANGL199086] [TRENTON613.800] [6] [ANGL156661] [DARL G1 22.000] [1]
CHNL#S 16.4: [ANGL199085] [TRENTN5 13.800] [5] [ANGL156661] [DARL G1 22.000] [1]
CHNL#S 15.4: [ANGL199061] [TMP1 STO13.800] [1] [ANGL156661] [DARL G1 22.000] [1]
CHNL#S 13.4: [ANGL199043] [ACONIG1 20.000] [1] [ANGL156661] [DARL G1 22.000] [1]
CHNL#S 11.4: [ANGL199001] [LINGAN1 14.400] [1] [ANGL156661] [DARL G1 22.000] [1]
TIME (SECONDS)
TUE, JAN 27 2009 15:55
NS ANGLE

2013 WINTER PEAK STORA 167, NS LOAD 2371
NS-NB=-200; NB-NE=300; CBX=543; ONI=773 ONS=863
3 PHASE FAULT ON L6007 AT BURNSIDE PRIMARY PROTECTION FAILS
CLEARED IN 6 CYCLES FROM BURNSIDE
FILE: a119F-l6007_108H_3ph_rect-2013WP-NS-import-200.out
CHNL#S 10.4: [ANGL190472] [BLLDNG2 19.000] [1] [ANGL156661] [DARL G1 22.000] [1]
CHNL#S 6.4: [ANGL190456] [LEPRG1 26.000] [1] [ANGL156661] [DARL G1 22.000] [1]
CHNL#S 5.4: [ANGL190450] [MACTG1 13.800] [1] [ANGL156661] [DARL G1 22.000] [1]
CHNL#S 3.4: [ANGL126652] [RAV 3 22.000] [1] [ANGL156661] [DARL G1 22.000] [1]
CHNL#S 2.4: [ANGL101063] [MYST G7 22.000] [1] [ANGL156661] [DARL G1 22.000] [1]
CHNL#S 1.4: [ANGL100060] [MIS GT1 18.000] [1] [ANGL156661] [DARL G1 22.000] [1]
TIME (SECONDS)
TUE, JAN 27 2009 15:55
"NE,NY,NB ANGLE"

2013 WINTER PEAK STORA 167, NS LOAD 2371
NS-NB=-200; NB-NE=300; CBX=543; ONI=773 ONS=863
3 PHASE FAULT ON L6007 AT BURNSIDE PRIMARY PROTECTION FAILS
CLEARED IN 6 CYCLES FROM BURNSIDE
FILE: a119F-l6007_108H_3ph_rect-2013WP-NS-import-200.out
CHNL# 59: [POWER199169] [TUFTCV3 14.400] [3] [1]
CHNL# 56: [POWER199086] [TRENTON613.800] [6] [1]
CHNL# 55: [POWER199085] [TRENTN5 13.800] [5] [1]
CHNL# 54: [POWER199061] [TMP1 STO13.800] [1] [1]
CHNL# 52: [POWER199043] [ACONIG1 20.000] [1] [1]
CHNL# 50: [POWER199001] [LINGAN1 14.400] [1] [1]
TIME (SECONDS)
TUE, JAN 27 2009 15:55
NS MW

2013 WINTER PEAK STORA 167, NS LOAD 2371
NS-NB=-200; NB-NE=300; CBX=543; ONI=773 ONS=863
3 PHASE FAULT ON L6007 AT BURNSIDE PRIMARY PROTECTION FAILS
CLEARED IN 6 CYCLES FROM BURNSIDE
FILE: a119F-l6007_108H_3ph_rect-2013WP-NS-import-200.out
CHNL# 49: [POWER190472] [BLLDNG2 19.000] [1]
CHNL# 45: [POWER190456] [LEPRG1 26.000] [1]
CHNL# 44: [POWER190450] [MACTG1 13.800] [1]
CHNL# 42: [POWER126652] [RAV 3 22.000] [1]
CHNL# 41: [POWER101063] [MYST G7 22.000] [1]
CHNL# 40: [POWER100060] [MIS GT1 18.000] [1]
TIME (SECONDS)
TUE, JAN 27 2009 15:55
"NE,NY,NB POWER"

2013 WINTER PEAK STORA 167, NS LOAD 2371
NS-NB=-200; NB-NE=300; CBX=543; ONI=773 ONS=863
3 PHASE FAULT ON L6007 AT BURNSIDE PRIMARY PROTECTION FAILS
CLEARED IN 6 CYCLES FROM BURNSIDE
FILE: a119F-l6007_108H_3ph_rect-2013WP-NS-import-200.out
CHNL# 114: [VARS IR45_AMHERST]
CHNL# 115: [VARS IR82_NUTTBY]
CHNL# 116: [VARS IR84-DALHOUSIE]
CHNL# 117: [VARS IR114-GLENDHU]
CHNL# 118: [VARS IR137-STATIA]
CHNL# 119: [VARS IR141-DIGBY]
TIME (SECONDS)
TUE, JAN 27 2009 15:55
NS WIND MV

2013 WINTER PEAK STORA 167, NS LOAD 2371
NS-NB=-200; NB-NE=300; CBX=543; ONI=773 ONS=863
3 PHASE FAULT ON L6007 AT BURNSIDE PRIMARY PROTECTION FAILS
CLEARED IN 6 CYCLES FROM BURNSIDE
FILE: a119F-l6007_108H_3ph_rect-2013WP-NS-import-200.out
CHNL# 74: [POWER IR45_AMHERST]
CHNL# 75: [POWER IR82_NUTTBY]
CHNL# 76: [POWER IR84-DALHOUSIE]
CHNL# 77: [POWER IR114-GLENDHU]
CHNL# 78: [POWER IR137-STATIA]
CHNL# 79: [POWER IR141-DIGBY]
TIME (SECONDS)
TUE, JAN 27 2009 15:55
NS WIND MW

2013 WINTER PEAK STORA 167, NS LOAD 2371
NS-NB=-200; NB-NE=300; CBX=543; ONI=773 ONS=863
3 PHASE FAULT ON L6007 AT BURNSIDE PRIMARY PROTECTION FAILS
CLEARED IN 6 CYCLES FROM BURNSIDE
FILE: a119F-l6007_108H_3ph_rect-2013WP-NS-import-200.out
CHNL# 127: [VOLT 70002 [ORRINGTN345.00]]
CHNL# 128: [VOLT190004 [KESWICK 345.00]]
CHNL# 130: [VOLT190320 [SALBRY 345.00]]
CHNL# 131: [VOLT199045 [WOODBINE345.00]]
CHNL# 132: [VOLT199120 [HOPEWELL345.00]]
CHNL# 133: [VOLT199125 [ONSLOW 345.00]]
TIME (SECONDS)
TUE, JAN 27 2009 15:55
"345KV VOLTAGE"

2013 WINTER PEAK STORA 167, NS LOAD 2371
NS-NB=-200; NB-NE=300; CBX=543; ONI=773 ONS=863
3 PHASE FAULT ON L6007 AT BURNSIDE PRIMARY PROTECTION FAILS
CLEARED IN 6 CYCLES FROM BURNSIDE
FILE: a119F-l6007_108H_3ph_rect-2013WP-NS-import-200.out
CHNL# 120: 60*(1+[FREQ 70002 [ORRINGTN345.00]])
CHNL# 121: 60*(1+[FREQ190197 [C.COVE 345.00]])
CHNL# 122: 60*(1+[FREQ190320 [SALBRY 345.00]])
CHNL# 123: 60*(1+[FREQ199045 [WOODBINE345.00]])
CHNL# 124: 60*(1+[FREQ199120 [HOPEWELL345.00]])
CHNL# 125: 60*(1+[FREQ199125 [ONSLOW 345.00]])
TIME (SECONDS)
TUE, JAN 27 2009 15:55
FREQUENCY HZ

2013 WINTER PEAK STORA 167, NS LOAD 2371
NS-NB=-200; NB-NE=300; CBX=543; ONI=773 ONS=863
3 PHASE FAULT ON L6007 AT BURNSIDE PRIMARY PROTECTION FAILS
CLEARED IN 6 CYCLES FROM BURNSIDE
FILE: a119F-l6007_108H_3ph_rect-2013WP-NS-import-200.out
CHNL# 146: [VOLT199280 [TUSKET A138.00]]
CHNL# 145: [VOLT199193 [HHWAS 138.00]]
CHNL# 144: [VOLT199165 [TUFTCOVE138.00]]
CHNL# 143: [VOLT199138: [SPRNGHILL138.00]]
CHNL# 142: [VOLT199090 [SON-TREN138.00]]
CHNL# 141: [VOLT199051 [HASTINGS138.00]]
TIME (SECONDS)
TUE, JAN 27 2009 15:55
138KV BUS VOLTS

2013 WINTER PEAK STORA 167, NS LOAD 2371
NS-NB=-200; NB-NE=300; CBX=543; ONI=773 ONS=863
3 PHASE FAULT ON L6007 AT BURNSIDE PRIMARY PROTECTION FAILS
CLEARED IN 6 CYCLES FROM BURNSIDE
FILE: a119F-l6007_108H_3ph_rect-2013WP-NS-import-200.out
CHNL# 140: [VOLT199240 [BWATER A230.00]]
CHNL# 139: [VOLT199200 [BRUSHY 230.00]]
CHNL# 138: [VOLT199130 [ONSLOW 230.00]]
CHNL# 137: [VOLT199050 [HASTINGS230.00]]
CHNL# 136: [VOLT199044 [PT.ACONI230.00]]
CHNL# 135: [VOLT199000 [LINGAN 230.00]]
TIME (SECONDS)
TUE, JAN 27 2009 15:55
230KV BUS VOLTS

2013 WINTER PEAK STORA 167, NS LOAD 2371
NS-NB=-200; NB-NE=300; CBX=543; ONI=773 ONS=863
3 PHASE FAULT ON L6007 AT BURNSIDE PRIMARY PROTECTION FAILS
CLEARED IN 6 CYCLES FROM BURNSIDE
FILE: a119F-l6007_108H_3ph_rect-2013WP-NS-import-200.out
CHNL# 217: [L6513MW]
CHNL# 215: [L6503MW]
CHNL# 197: [L8003MW]
CHNL# 195: [L8004MW]
CHNL# 193: [L8001MW]
CHNL# 221: [L3001MW]
TIME (SECONDS)
TUE, JAN 27 2009 15:55
LINE FLOW MW

2013 WINTER PEAK STORA 167, NS LOAD 2371
NS-NB=-200; NB-NE=300; CBX=543; ONI=773 ONS=863
3 PHASE FAULT ON L6007 AT BURNSIDE PRIMARY PROTECTION FAILS
CLEARED IN 6 CYCLES FROM BURNSIDE
FILE: a119F-l6007_108H_3ph_rect-2013WP-NS-import-200.out
CHNL# 154: [IR141-DIGBYH69.0 VOLTS]
CHNL# 153: [IR137-STATIG25.0 VOLTS]
CHNL# 152: [IR114-GLENDH138.0 VOLTS]
CHNL# 151: [IR84-DALHOHV230.0 VOLTS]
CHNL# 150: [IR82_NUTBHV69.0 VOLTS]
CHNL# 149: [IR45_ANHERTP138.0 VOLTS]
TIME (SECONDS)
TUE, JAN 27 2009 15:55
WIND BUS VOLTS

2013 WINTER PEAK STORA 167, NS LOAD 2371
NS-NB=-200; NB-NE=300; CBX=543; ONI=773 ONS=863
3 PHASE FAULT ON L6008 AT 108H-LAK
CLEARED IN 6 CYCLES - RECLOSE ATTEMPT IN 5 SEC FROM 91H
FILE: a120-l6008_103H_3ph_recl-2013WP-NS-import-200.out
CHNL# 20: [ANGL199169 [TUFTCV3 14.400] [3]] [ANGL156661 [DARL G1 22.000] [1]
CHNL# 17: [ANGL199086 [TRENTON613.800] [6]] [ANGL156661 [DARL G1 22.000] [1]
CHNL# 16: [ANGL199085 [TRENTN5 13.800] [5]] [ANGL156661 [DARL G1 22.000] [1]
CHNL# 15: [ANGL199061 [TMP1 STO13.800] [1]] [ANGL156661 [DARL G1 22.000] [1]
CHNL# 13: [ANGL199043 [ACONIG1 20.000] [1]] [ANGL156661 [DARL G1 22.000] [1]
CHNL# 11: [ANGAN1 14.400] [1]] [ANGL156661 [DARL G1 22.000] [1]
TIME (SECONDS)
TUE, JAN 27 2009 15:55
NS ANGLE

2013 WINTER PEAK STORA 167, NS LOAD 2371
NS-NB=-200; NB-NE=300; CBX=543; ONI=773 ONS=863
3 PHASE FAULT ON L6008 AT 108H-LAK
CLEARED IN 6 CYCLES - RECLOSE ATTEMPT IN 5 SEC FROM 91H
FILE: a120-l6008_103H_3ph_recl-2013WP-NS-import-200.out
CHNL# 10: [ANGL190472 [BLLDNG2 19.000] [1]] [ANGL156661 [DARL G1 22.000] [1]
CHNL# 6: [ANGL190456 [LEPRG1 26.000] [1]] [ANGL156661 [DARL G1 22.000] [1]
CHNL# 5: [ANGL190450 [MACTG1 13.800] [1]] [ANGL156661 [DARL G1 22.000] [1]
CHNL# 3: [ANGL126652 [RAV 3 22.000] [1]] [ANGL156661 [DARL G1 22.000] [1]
CHNL# 2: [ANGL101063 [MYST G7 22.000] [1]] [ANGL156661 [DARL G1 22.000] [1]
CHNL# 1: [ANGL100060 [MIS GT1 18.000] [1]] [ANGL156661 [DARL G1 22.000] [1]
TIME (SECONDS)
TUE, JAN 27 2009 15:55
"NE,NY,NB ANGLE"

2013 WINTER PEAK STORA 167, NS LOAD 2371
NS-NB=-200; NB-NE=300; CBX=543; ONI=773 ONS=863
3 PHASE FAULT ON L6008 AT 108H-LAK
CLEARED IN 6 CYCLES - RECLOSE ATTEMPT IN 5 SEC FROM 91H
FILE: a120-l6008_103H_3ph_recl-2013WP-NS-import-200.out
CHNL# 59: [POWER199169 [TUFTCV3 14.400] [3]]
CHNL# 56: [POWER199086 [TRENTON613.800] [6]]
CHNL# 55: [POWER199085 [TRENTN5 13.800] [5]]
CHNL# 54: [POWER199061 [TMP1 STO13.800] [1]]
CHNL# 52: [POWER199043 [ACONIG1 20.000] [1]]
CHNL# 50: [POWER199001 [LINGAN1 14.400] [1]]
TIME (SECONDS)
TUE, JAN 27 2009 15:55
NS MW

2013 WINTER PEAK STORA 167, NS LOAD 2371
NS-NB=-200; NB-NE=300; CBX=543; ONI=773 ONS=863
3 PHASE FAULT ON L6008 AT 108H-LAK
CLEARED IN 6 CYCLES - RECLOSE ATTEMPT IN 5 SEC FROM 91H
FILE: a120-l6008_103H_3ph_recl-2013WP-NS-import-200.out
CHNL# 49: [POWER190472 [BLLDNG2 19.000] [1]]
CHNL# 45: [POWER190456 [LEPRG1 26.000] [1]]
CHNL# 44: [POWER190450 [MACTG1 13.800] [1]]
CHNL# 42: [POWER126652 [RAV 3 22.000] [1]]
CHNL# 41: [POWER101063 [MYST G7 22.000] [1]]
CHNL# 40: [POWER100060 [MIS GT1 18.000] [1]]
TIME (SECONDS)
TUE, JAN 27 2009 15:55
"NE,NY,NB POWER"

2013 WINTER PEAK STORA 167, NS LOAD 2371
NS-NB=-200; NB-NE=300; CBX=543; ONI=773 ONS=863
3 PHASE FAULT ON L6008 AT 108H-LAK
CLEARED IN 6 CYCLES - RECLOSE ATTEMPT IN 5 SEC FROM 91H
FILE: a120-l6008_103H_3ph_recl-2013WP-NS-import-200.out
CHNL# 119: [VARS IR141-DIGBY]
CHNL# 118: [VARS IR137-STATIA]
CHNL# 117: [VARS IR114-GLENDHU]
CHNL# 116: [VARS IR84-DALHOUSIE]
CHNL# 115: [VARS IR82_NUTTBY]
CHNL# 114: [VARS IR45_AMHERST]
TIME (SECONDS)
TUE, JAN 27 2009 15:55
NS WIND MV

2013 WINTER PEAK STORA 167, NS LOAD 2371
NS-NB=-200; NB-NE=300; CBX=543; ONI=773 ONS=863
3 PHASE FAULT ON L6008 AT 108H-LAK
CLEARED IN 6 CYCLES - RECLOSE ATTEMPT IN 5 SEC FROM 91H
FILE: a120-l6008_103H_3ph_recl-2013WP-NS-import-200.out
CHNL# 79: [POWER IR141-DIGBY]
CHNL# 78: [POWER IR137-STATIA]
CHNL# 77: [POWER IR114-GLENDHU]
CHNL# 76: [POWER IR84-DALHOUSIE]
CHNL# 75: [POWER IR82_NUTTBY]
CHNL# 74: [POWER IR45_AMHERST]
TIME (SECONDS)
TUE, JAN 27 2009 15:55
NS WIND MW

2013 WINTER PEAK STORA 167, NS LOAD 2371
NS-NB=-200; NB-NE=300; CBX=543; ONI=773 ONS=863
3 PHASE FAULT ON L6008 AT 108H-LAK
CLEARED IN 6 CYCLES - RECLOSE ATTEMPT IN 5 SEC FROM 91H
FILE: a120-l6008_103H_3ph_recl-2013WP-NS-import-200.out
CHNL# 133: [VOLT199125 [ONSLOW 345.00]]
CHNL# 132: [VOLT199120 [HOPEWELL345.00]]
CHNL# 131: [VOLT199045 [WOODBINE345.00]]
CHNL# 130: [VOLT190320 [SALBRY 345.00]]
CHNL# 128: [VOLT190004 [KESWICK 345.00]]
CHNL# 127: [VOLT 70002 [ORRINGTN345.00]]
TIME (SECONDS)
TUE, JAN 27 2009 15:55
"345KV VOLTAGE"

2013 WINTER PEAK STORA 167, NS LOAD 2371
NS-NB=-200; NB-NE=300; CBX=543; ONI=773 ONS=863
3 PHASE FAULT ON L6008 AT 108H-LAK
CLEARED IN 6 CYCLES - RECLOSE ATTEMPT IN 5 SEC FROM 91H
FILE: a120-l6008_103H_3ph_recl-2013WP-NS-import-200.out
CHNL# 125: 60*(1+[FREQ199125 [ONSLOW 345.00]])
CHNL# 124: 60*(1+[FREQ199120 [HOPEWELL345.00]])
CHNL# 123: 60*(1+[FREQ199045 [WOODBINE345.00]])
CHNL# 122: 60*(1+[FREQ190320 [SALBRY 345.00]])
CHNL# 121: 60*(1+[FREQ190197 [C.COVE 345.00]])
CHNL# 120: 60*(1+[FREQ 70002 [ORRINGTN345.00]])
TIME (SECONDS)
TUE, JAN 27 2009 15:55
FREQUENCY HZ

2013 WINTER PEAK STORA 167, NS LOAD 2371
NS-NB=-200; NB-NE=300; CBX=543; ONI=773 ONS=863
3 PHASE FAULT ON L6008 AT 108H-LAK
CLEARED IN 6 CYCLES - RECLOSE ATTEMPT IN 5 SEC FROM 91H
FILE: a120-l6008_103H_3ph_recl-2013WP-NS-import-200.out
CHNL# 141: [VOLT199051 [HASTINGS138.00]]
CHNL# 142: [VOLT199090 [SON-TREN138.00]]
CHNL# 143: [VOLT199135 [SPRNGHL138.00]]
CHNL# 144: [VOLT199165 [TUFTCOVE138.00]]
CHNL# 145: [VOLT199193 [HWAS 138.00]]
CHNL# 146: [VOLT199280 [TUSKET A138.00]]
TIME (SECONDS)
TUE, JAN 27 2009 15:55
138KV BUS VOLTS

2013 WINTER PEAK STORA 167, NS LOAD 2371
NS-NB=-200; NB-NE=300; CBX=543; ONI=773 ONS=863
3 PHASE FAULT ON L6008 AT 108H-LAK
CLEARED IN 6 CYCLES - RECLOSE ATTEMPT IN 5 SEC FROM 91H
FILE: a120-l6008_103H_3ph_recl-2013WP-NS-import-200.out
CHNL# 135: [VOLT199000 [LINGAN 230.00]]
CHNL# 136: [VOLT199044 [PT.ACONI230.00]]
CHNL# 137: [VOLT199050 [HASTINGS230.00]]
CHNL# 138: [VOLT199130 [ONSLOW 230.00]]
CHNL# 139: [VOLT199200 [BRUSHY 230.00]]
CHNL# 140: [VOLT199240 [BWATER A230.00]]
TIME (SECONDS)
TUE, JAN 27 2009 15:55
230KV BUS VOLTS

2013 WINTER PEAK STORA 167, NS LOAD 2371
NS-NB=-200; NB-NE=300; CBX=543; ONI=773 ONS=863
3 PHASE FAULT ON L6008 AT 108H-LAK
CLEARED IN 6 CYCLES - RECLOSE ATTEMPT IN 5 SEC FROM 91H
FILE: a120-l6008_103H_3ph_recl-2013WP-NS-import-200.out
CHNL# 193: [L8001MW]
CHNL# 195: [L8004MW]
CHNL# 197: [L8003MW]
CHNL# 215: [L6503MW]
CHNL# 217: [L6533MW]
CHNL# 221: [L3001MW]
TIME (SECONDS)
TUE, JAN 27 2009 15:55
LINE FLOW MW

2013 WINTER PEAK STORA 167, NS LOAD 2371
NS-NB=-200; NB-NE=300; CBX=543; ONI=773 ONS=863
3 PHASE FAULT ON L6008 AT 108H-LAK
CLEARED IN 6 CYCLES - RECLOSE ATTEMPT IN 5 SEC FROM 91H
FILE: a120-l6008_103H_3ph_recl-2013WP-NS-import-200.out
CHNL# 149: [R45_AMHERTP138.0 VOLTS]
CHNL# 150: [R82_NUTBHV69.0 VOLTS]
CHNL# 151: [R84-DALHOHV230.0 VOLTS]
CHNL# 152: [R114-GLENDH138.0 VOLTS]
CHNL# 153: [R137-STATIG25.0 VOLTS]
CHNL# 154: [R141-DIGBYH69.0 VOLTS]
TIME (SECONDS)
TUE, JAN 27 2009 15:55
WIND BUS VOLTS

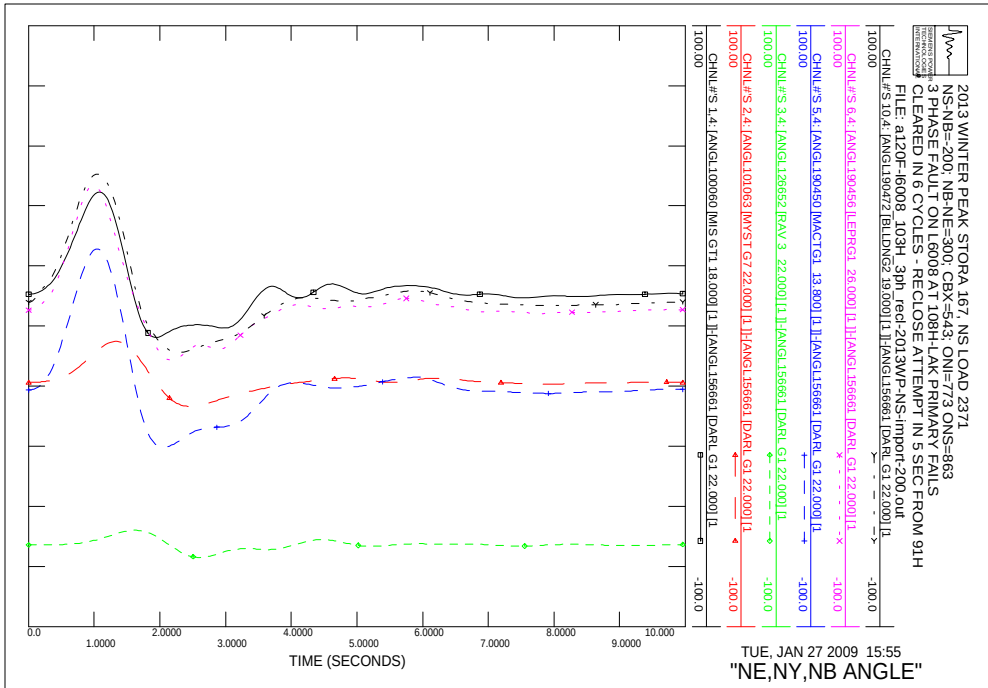
2013 WINTER PEAK STORA 167, NS LOAD 2371
NS-NB=-200; NB-NE=300; CBX=543; ONI=773 ONS=863
3 PHASE FAULT ON L6008 AT 108H-LAK PRIMARY FAILS
CLEARED IN 6 CYCLES - RECLOSE ATTEMPT IN 5 SEC FROM 91H
FILE: a120F-l6008_103H_3ph_recl-2013WP-NS-import-200.out
CHNL#S 10,4: [ANGL190472 [BLLDNG2 19.000] [1]]-[ANGL156661 [DARL G1 22.000] [1
CHNL#S 6,4: [ANGL190456 [LEPRG1 26.000] [1]]-[ANGL156661 [DARL G1 22.000] [1
CHNL#S 5,4: [ANGL190450 [MACTG1 13.800] [1]]-[ANGL156661 [DARL G1 22.000] [1
CHNL#S 3,4: [ANGL126652 [RAV 3 22.000] [1]]-[ANGL156661 [DARL G1 22.000] [1
CHNL#S 2,4: [ANGL101063 [MYST G7 22.000] [1]]-[ANGL156661 [DARL G1 22.000] [1
CHNL#S 1,4: [ANGL100060 [MIS GT1 18.000] [1]]-[ANGL156661 [DARL G1 22.000] [1
100.00
-100.0
TIME (SECONDS)
TUE, JAN 27 2009 15:55
"NE,NY,NB ANGLE"

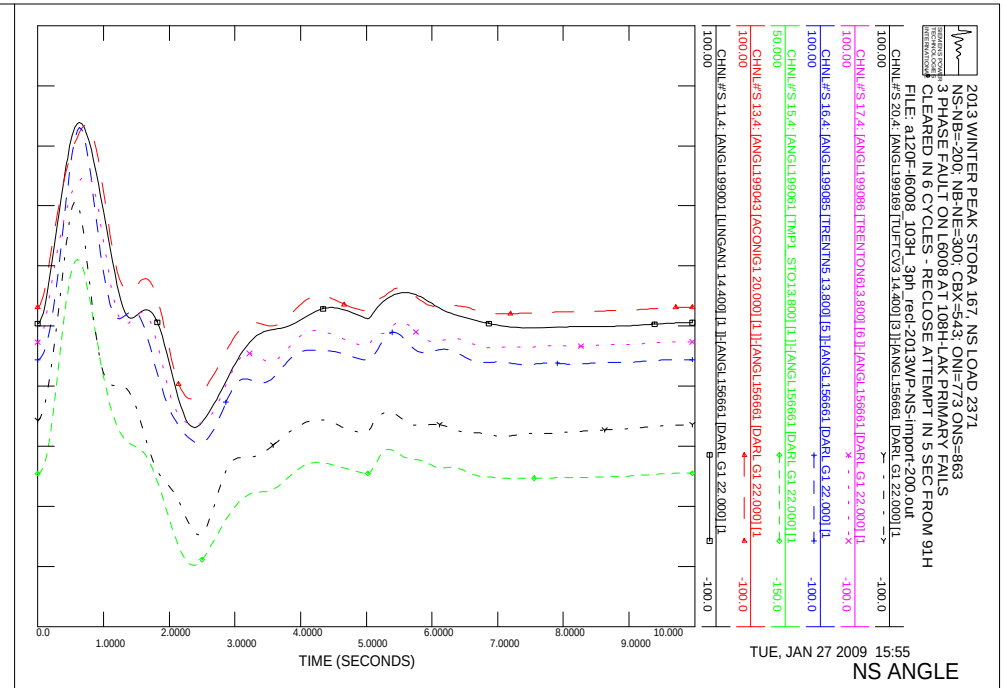
2013 WINTER PEAK STORA 167, NS LOAD 2371
NS-NB=-200; NB-NE=300; CBX=543; ONI=773 ONS=863
3 PHASE FAULT ON L6008 AT 108H-LAK PRIMARY FAILS
CLEARED IN 6 CYCLES - RECLOSE ATTEMPT IN 5 SEC FROM 91H
FILE: a120F-l6008_103H_3ph_recl-2013WP-NS-import-200.out
CHNL#S 20,4: [ANGL199169 [TUFTCV3 14.400] [3]]-[ANGL156661 [DARL G1 22.000] [1
CHNL#S 17,4: [ANGL199086 [TRENTON613.800] [6]]-[ANGL156661 [DARL G1 22.000] [1
CHNL#S 16,4: [ANGL199085 [TRENTN5 13.800] [5]]-[ANGL156661 [DARL G1 22.000] [1
CHNL#S 15,4: [ANGL199061 [TMP1 STO13.800] [1]]-[ANGL156661 [DARL G1 22.000] [1
CHNL#S 13,4: [ANGL199043 [ACONIG1 20.000] [1]]-[ANGL156661 [DARL G1 22.000] [1
CHNL#S 11,4: [ANGL199001 [LINGAN1 14.400] [1]]-[ANGL156661 [DARL G1 22.000] [1
100.00
-100.0
TIME (SECONDS)
TUE, JAN 27 2009 15:55
NS ANGLE

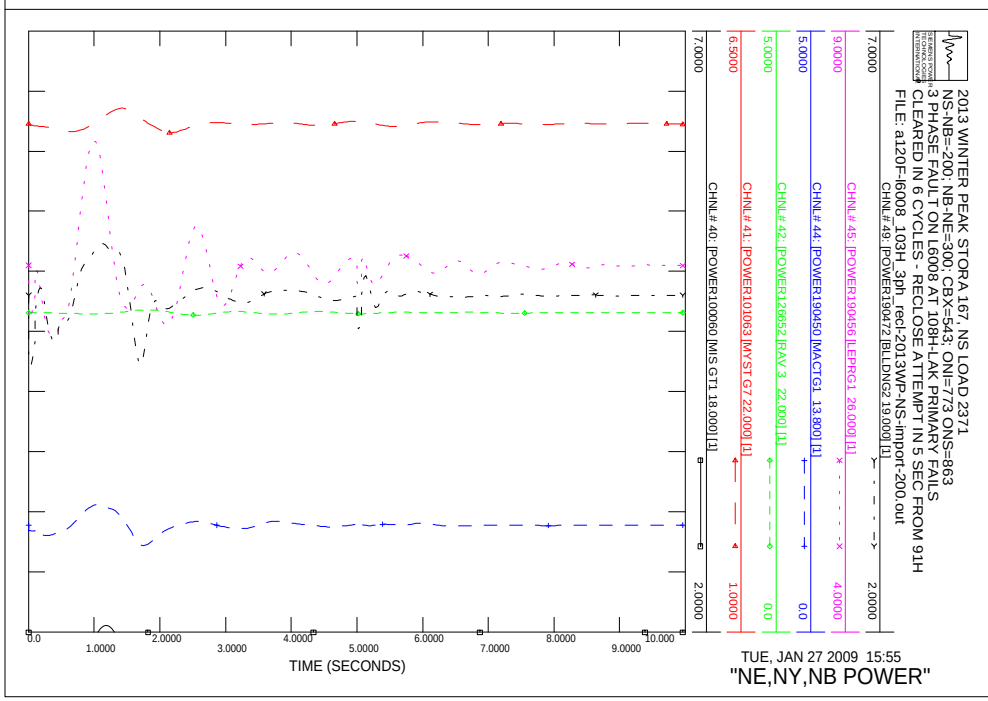
2013 WINTER PEAK STORA 167, NS LOAD 2371
NS-NB=-200; NB-NE=300; CBX=543; ONI=773 ONS=863
3 PHASE FAULT ON L6008 AT 108H-LAK PRIMARY FAILS
CLEARED IN 6 CYCLES - RECLOSE ATTEMPT IN 5 SEC FROM 91H
FILE: a120F-l6008_103H_3ph_recl-2013WP-NS-import-200.out
CHNL# 49: [POWER190472 [BLLDNG2 19.000] [1]]
CHNL# 45: [POWER190456 [LEPRG1 26.000] [1]]
CHNL# 44: [POWER190450 [MACTG1 13.800] [1]]
CHNL# 42: [POWER126652 [RAV 3 22.000] [1]]
CHNL# 41: [POWER101063 [MYST G7 22.000] [1]]
CHNL# 40: [POWER100060 [MIS GT1 18.000] [1]]
7.0000
2.0000
TIME (SECONDS)
TUE, JAN 27 2009 15:55
"NE,NY,NB POWER"

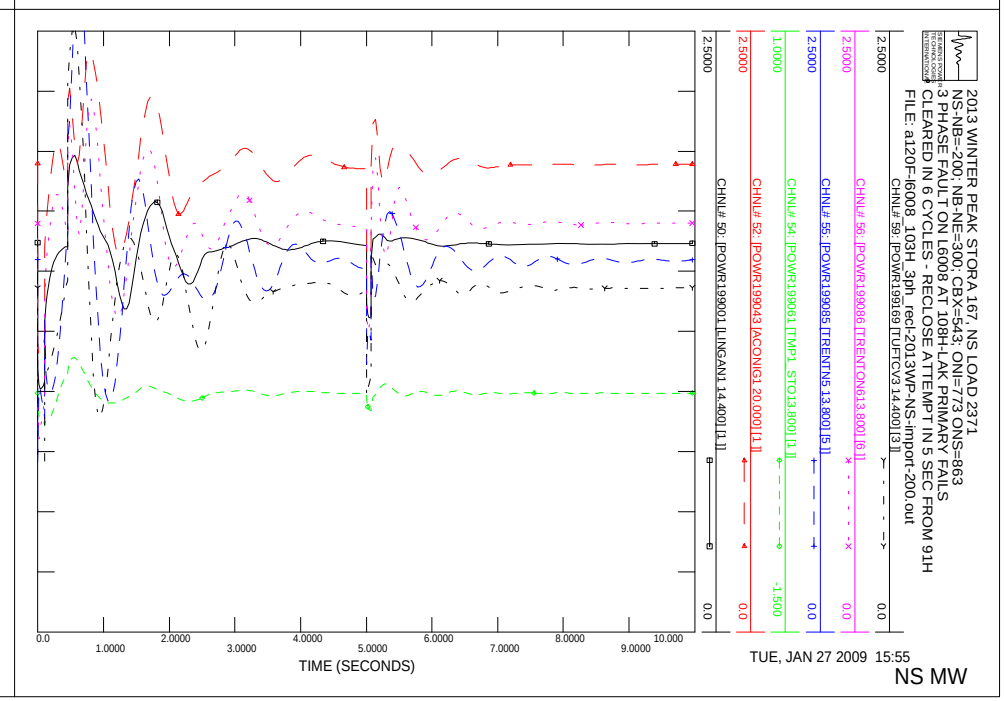
2013 WINTER PEAK STORA 167, NS LOAD 2371
NS-NB=-200; NB-NE=300; CBX=543; ONI=773 ONS=863
3 PHASE FAULT ON L6008 AT 108H-LAK PRIMARY FAILS
CLEARED IN 6 CYCLES - RECLOSE ATTEMPT IN 5 SEC FROM 91H
FILE: a120F-l6008_103H_3ph_recl-2013WP-NS-import-200.out
CHNL# 59: [POWR199169 [TUFTCV3 14.400] [3]]
CHNL# 56: [POWR199086 [TRENTON613.800] [6]]
CHNL# 55: [POWR199085 [TRENTN5 13.800] [5]]
CHNL# 54: [POWR199061 [TMP1 STO13.800] [1]]
CHNL# 52: [POWR199043 [ACONIG1 20.000] [1]]
CHNL# 50: [POWR199001 [LINGAN1 14.400] [1]]
2.5000
0.0
TIME (SECONDS)
TUE, JAN 27 2009 15:55
NS MW

2013 WINTER PEAK STORA 167, NS LOAD 2371
NS-NB=-200; NB-NE=300; CBX=543; ONI=773 ONS=863
3 PHASE FAULT ON L6008 AT 108H-LAK PRIMARY FAILS
CLEARED IN 6 CYCLES - RECLOSE ATTEMPT IN 5 SEC FROM 91H
FILE: a120F-l6008_103H_3ph_rect-2013WP-NS-import-200.out
CHNL# 119: [VARS IR141-DIGBY]
CHNL# 118: [VARS IR137-STATIA]
CHNL# 117: [VARS IR114-GLENDHU]
CHNL# 116: [VARS IR84-DALHOUSIE]
CHNL# 115: [VARS IR82_NUTTBY]
CHNL# 114: [VARS IR45_AMHERST]
TIME (SECONDS)
TUE, JAN 27 2009 15:55
NS WIND MV

2013 WINTER PEAK STORA 167, NS LOAD 2371
NS-NB=-200; NB-NE=300; CBX=543; ONI=773 ONS=863
3 PHASE FAULT ON L6008 AT 108H-LAK PRIMARY FAILS
CLEARED IN 6 CYCLES - RECLOSE ATTEMPT IN 5 SEC FROM 91H
FILE: a120F-l6008_103H_3ph_rect-2013WP-NS-import-200.out
CHNL# 79: [POWER IR141-DIGBY]
CHNL# 78: [POWER IR137-STATIA]
CHNL# 77: [POWER IR114-GLENDHU]
CHNL# 76: [POWER IR84-DALHOUSIE]
CHNL# 75: [POWER IR82_NUTTBY]
CHNL# 74: [POWER IR45_AMHERST]
TIME (SECONDS)
TUE, JAN 27 2009 15:55
NS WIND MW

2013 WINTER PEAK STORA 167, NS LOAD 2371
NS-NB=-200; NB-NE=300; CBX=543; ONI=773 ONS=863
3 PHASE FAULT ON L6008 AT 108H-LAK PRIMARY FAILS
CLEARED IN 6 CYCLES - RECLOSE ATTEMPT IN 5 SEC FROM 91H
FILE: a120F-l6008_103H_3ph_rect-2013WP-NS-import-200.out
CHNL# 133: [VOLT199125 [ONSLOW 345.00]]
CHNL# 132: [VOLT199120 [HOPEWELL345.00]]
CHNL# 131: [VOLT199045 [WOODBINE345.00]]
CHNL# 130: [VOLT190320 [SALBRY 345.00]]
CHNL# 128: [VOLT190004 [KESWICK 345.00]]
CHNL# 127: [VOLT 70002 [ORRINGTN345.00]]
TIME (SECONDS)
TUE, JAN 27 2009 15:55
"345KV VOLTAGE"

2013 WINTER PEAK STORA 167, NS LOAD 2371
NS-NB=-200; NB-NE=300; CBX=543; ONI=773 ONS=863
3 PHASE FAULT ON L6008 AT 108H-LAK PRIMARY FAILS
CLEARED IN 6 CYCLES - RECLOSE ATTEMPT IN 5 SEC FROM 91H
FILE: a120F-l6008_103H_3ph_rect-2013WP-NS-import-200.out
CHNL# 125: 60*(1+[FREQ199125 [ONSLOW 345.00]])
CHNL# 124: 60*(1+[FREQ199120 [HOPEWELL345.00]])
CHNL# 123: 60*(1+[FREQ199045 [WOODBINE345.00]])
CHNL# 122: 60*(1+[FREQ190320 [SALBRY 345.00]])
CHNL# 121: 60*(1+[FREQ190197 [C.COVE 345.00]])
CHNL# 120: 60*(1+[FREQ 70002 [ORRINGTN345.00]])
TIME (SECONDS)
TUE, JAN 27 2009 15:55
FREQUENCY HZ

2013 WINTER PEAK STORA 167, NS LOAD 2371
NS-NB=-200; NB-NE=300; CBX=543; ONI=773 ONS=863
3 PHASE FAULT ON L6008 AT 108H-LAK PRIMARY FAILS
CLEARED IN 6 CYCLES - RECLOSE ATTEMPT IN 5 SEC FROM 91H
FILE: a120F-l6008_103H_3ph_rect-2013WP-NS-import-200.out
CHNL# 145: [VOLT199193 [HWAS_138.00]]
CHNL# 144: [VOLT199165 [TUFTCOVE138.00]]
CHNL# 143: [VOLT199138 [SPRNGHILL138.00]]
CHNL# 142: [VOLT199090 [SON-TREN138.00]]
CHNL# 141: [VOLT199051 [HASTINGS138.00]]
TIME (SECONDS)
TUE, JAN 27 2009 15:55
138KV BUS VOLTS

2013 WINTER PEAK STORA 167, NS LOAD 2371
NS-NB=-200; NB-NE=300; CBX=543; ONI=773 ONS=863
3 PHASE FAULT ON L6008 AT 108H-LAK PRIMARY FAILS
CLEARED IN 6 CYCLES - RECLOSE ATTEMPT IN 5 SEC FROM 91H
FILE: a120F-l6008_103H_3ph_rect-2013WP-NS-import-200.out
CHNL# 139: [VOLT199200 [BRUSHY_230.00]]
CHNL# 138: [VOLT199130 [ONSLOW_230.00]]
CHNL# 137: [VOLT199050 [HASTINGS230.00]]
CHNL# 136: [VOLT199044 [PT.ACONI230.00]]
CHNL# 135: [VOLT199000 [LINGAN_230.00]]
TIME (SECONDS)
TUE, JAN 27 2009 15:55
230KV BUS VOLTS

2013 WINTER PEAK STORA 167, NS LOAD 2371
NS-NB=-200; NB-NE=300; CBX=543; ONI=773 ONS=863
3 PHASE FAULT ON L6008 AT 108H-LAK PRIMARY FAILS
CLEARED IN 6 CYCLES - RECLOSE ATTEMPT IN 5 SEC FROM 91H
FILE: a120F-l6008_103H_3ph_rect-2013WP-NS-import-200.out
CHNL# 217: [L6533MW]
CHNL# 215: [L6503MW]
CHNL# 197: [L8003MW]
CHNL# 195: [L8004MW]
CHNL# 193: [L8001MW]
CHNL# 221: [L3001MW]
TIME (SECONDS)
TUE, JAN 27 2009 15:55
LINE FLOW MW

2013 WINTER PEAK STORA 167, NS LOAD 2371
NS-NB=-200; NB-NE=300; CBX=543; ONI=773 ONS=863
3 PHASE FAULT ON L6008 AT 108H-LAK PRIMARY FAILS
CLEARED IN 6 CYCLES - RECLOSE ATTEMPT IN 5 SEC FROM 91H
FILE: a120F-l6008_103H_3ph_rect-2013WP-NS-import-200.out
CHNL# 153: [IR137-STATIG25.0 VOLTS]
CHNL# 152: [IR114-GLENDH138.0 VOLTS]
CHNL# 151: [IR84-DALHOHV230.0 VOLTS]
CHNL# 150: [IR82_NUTBHV69.0 VOLTS]
CHNL# 149: [IR45_AMHERTP138.0 VOLTS]
TIME (SECONDS)
TUE, JAN 27 2009 15:55
WIND BUS VOLTS

2013 WINTER PEAK STORA 167, NS LOAD 2371
NS-NB=-200; NB-NE=300; CBX=543; ONI=773 ONS=863
3 PHASE FAULT ON L6010 AT 120H-BRUSHYHILL
CLEARED IN 6 CYCLES - RECLOSE ATTEMPT IN 3 SEC FROM 120H
FILE: a121-l6010_120H_3ph_recl-2013WP-NS-import-200.out
CHNL# 20: [ANGL199169 [TUFTCV3 14.400] [3]] [ANGL156661 [DARL G1 22.000] [1]
CHNL# 17: [ANGL199086 [TRENTON613.800] [6]] [ANGL156661 [DARL G1 22.000] [1]
CHNL# 16: [ANGL199085 [TRENTN5 13.800] [5]] [ANGL156661 [DARL G1 22.000] [1]
CHNL# 15: [ANGL199061 [TMP1 STO13.800] [1]] [ANGL156661 [DARL G1 22.000] [1]
CHNL# 13: [ANGL199043 [ACONIG1 20.000] [1]] [ANGL156661 [DARL G1 22.000] [1]
CHNL# 11: [ANGL199001 [LINGAN1 14.400] [1]] [ANGL156661 [DARL G1 22.000] [1]
TIME (SECONDS)
TUE, JAN 27 2009 15:55
NS ANGLE

2013 WINTER PEAK STORA 167, NS LOAD 2371
NS-NB=-200; NB-NE=300; CBX=543; ONI=773 ONS=863
3 PHASE FAULT ON L6010 AT 120H-BRUSHYHILL
CLEARED IN 6 CYCLES - RECLOSE ATTEMPT IN 3 SEC FROM 120H
FILE: a121-l6010_120H_3ph_recl-2013WP-NS-import-200.out
CHNL# 10: [ANGL190472 [BLLDNG2 19.000] [1]] [ANGL156661 [DARL G1 22.000] [1]
CHNL# 6: [ANGL190456 [LEPRG1 26.000] [1]] [ANGL156661 [DARL G1 22.000] [1]
CHNL# 5: [ANGL190450 [MACTG1 13.800] [1]] [ANGL156661 [DARL G1 22.000] [1]
CHNL# 3: [ANGL126652 [RAV 3 22.000] [1]] [ANGL156661 [DARL G1 22.000] [1]
CHNL# 2: [ANGL101063 [MYST G7 22.000] [1]] [ANGL156661 [DARL G1 22.000] [1]
CHNL# 1: [ANGL100060 [MIS GT1 18.000] [1]] [ANGL156661 [DARL G1 22.000] [1]
TIME (SECONDS)
TUE, JAN 27 2009 15:55
"NE,NY,NB ANGLE"

2013 WINTER PEAK STORA 167, NS LOAD 2371
NS-NB=-200; NB-NE=300; CBX=543; ONI=773 ONS=863
3 PHASE FAULT ON L6010 AT 120H-BRUSHYHILL
CLEARED IN 6 CYCLES - RECLOSE ATTEMPT IN 3 SEC FROM 120H
FILE: a121-l6010_120H_3ph_recl-2013WP-NS-import-200.out
CHNL# 59: [POWER199169 [TUFTCV3 14.400] [3]]
CHNL# 56: [POWER199086 [TRENTON613.800] [6]]
CHNL# 55: [POWER199085 [TRENTN5 13.800] [5]]
CHNL# 54: [POWER199061 [TMP1 STO13.800] [1]]
CHNL# 52: [POWER199043 [ACONIG1 20.000] [1]]
CHNL# 50: [POWER199001 [LINGAN1 14.400] [1]]
TIME (SECONDS)
TUE, JAN 27 2009 15:55
NS MW

2013 WINTER PEAK STORA 167, NS LOAD 2371
NS-NB=-200; NB-NE=300; CBX=543; ONI=773 ONS=863
3 PHASE FAULT ON L6010 AT 120H-BRUSHYHILL
CLEARED IN 6 CYCLES - RECLOSE ATTEMPT IN 3 SEC FROM 120H
FILE: a121-l6010_120H_3ph_recl-2013WP-NS-import-200.out
CHNL# 49: [POWER190472 [BLLDNG2 19.000] [1]]
CHNL# 45: [POWER190456 [LEPRG1 26.000] [1]]
CHNL# 44: [POWER190450 [MACTG1 13.800] [1]]
CHNL# 42: [POWER126652 [RAV 3 22.000] [1]]
CHNL# 41: [POWER101063 [MYST G7 22.000] [1]]
CHNL# 40: [POWER100060 [MIS GT1 18.000] [1]]
TIME (SECONDS)
TUE, JAN 27 2009 15:55
"NE,NY,NB POWER"

2013 WINTER PEAK STORA 167, NS LOAD 2371
NS-NB=-200; NB-NE=300; CBX=543; ONI=773 ONS=863
3 PHASE FAULT ON L6010 AT 120H-BRUSHYHILL
CLEARED IN 6 CYCLES - RECLOSE ATTEMPT IN 3 SEC FROM 120H
FILE: a121-l6010_120H_3ph_recl-2013WP-NS-import-200.out
CHNL# 119: [VARS IR141-DIGBY]
CHNL# 118: [VARS IR137-STATIA]
CHNL# 117: [VARS IR114-GLENDHU]
CHNL# 116: [VARS IR84-DALHOUSIE]
CHNL# 115: [VARS IR82_NUTTBY]
CHNL# 114: [VARS IR45_AMHERST]
TIME (SECONDS)
TUE, JAN 27 2009 15:55
NS WIND MV

2013 WINTER PEAK STORA 167, NS LOAD 2371
NS-NB=-200; NB-NE=300; CBX=543; ONI=773 ONS=863
3 PHASE FAULT ON L6010 AT 120H-BRUSHYHILL
CLEARED IN 6 CYCLES - RECLOSE ATTEMPT IN 3 SEC FROM 120H
FILE: a121-l6010_120H_3ph_recl-2013WP-NS-import-200.out
CHNL# 79: [POWER IR141-DIGBY]
CHNL# 78: [POWER IR137-STATIA]
CHNL# 77: [POWER IR114-GLENDHU]
CHNL# 76: [POWER IR84-DALHOUSIE]
CHNL# 75: [POWER IR82_NUTTBY]
CHNL# 74: [POWER IR45_AMHERST]
TIME (SECONDS)
TUE, JAN 27 2009 15:55
NS WIND MW

2013 WINTER PEAK STORA 167, NS LOAD 2371
NS-NB=-200; NB-NE=300; CBX=543; ONI=773 ONS=863
3 PHASE FAULT ON L6010 AT 120H-BRUSHYHILL
CLEARED IN 6 CYCLES - RECLOSE ATTEMPT IN 3 SEC FROM 120H
FILE: a121-l6010_120H_3ph_recl-2013WP-NS-import-200.out
CHNL# 133: [VOLT199125 [ONSLOW 345.00]]
CHNL# 132: [VOLT199120 [HOPEWELL 345.00]]
CHNL# 131: [VOLT199045 [WOODBINE345.00]]
CHNL# 130: [VOLT190320 [SALBRY 345.00]]
CHNL# 128: [VOLT190004 [KESWICK 345.00]]
CHNL# 127: [VOLT 70002 [ORRINGTN345.00]]
TIME (SECONDS)
TUE, JAN 27 2009 15:55
"345KV VOLTAGE"

2013 WINTER PEAK STORA 167, NS LOAD 2371
NS-NB=-200; NB-NE=300; CBX=543; ONI=773 ONS=863
3 PHASE FAULT ON L6010 AT 120H-BRUSHYHILL
CLEARED IN 6 CYCLES - RECLOSE ATTEMPT IN 3 SEC FROM 120H
FILE: a121-l6010_120H_3ph_recl-2013WP-NS-import-200.out
CHNL# 125: 60*(1+[FREQ199125 [ONSLOW 345.00]])
CHNL# 124: 60*(1+[FREQ199120 [HOPEWELL 345.00]])
CHNL# 123: 60*(1+[FREQ199045 [WOODBINE345.00]])
CHNL# 122: 60*(1+[FREQ190320 [SALBRY 345.00]])
CHNL# 121: 60*(1+[FREQ190197 [C.COVE 345.00]])
CHNL# 120: 60*(1+[FREQ 70002 [ORRINGTN345.00]])
TIME (SECONDS)
TUE, JAN 27 2009 15:55
FREQUENCY HZ

2013 WINTER PEAK STORA 167, NS LOAD 2371
NS-NB=-200; NB-NE=300; CBX=543; ONI=773 ONS=863
3 PHASE FAULT ON L6010 AT 120H-BRUSHYHILL
CLEARED IN 6 CYCLES - RECLOSE ATTEMPT IN 3 SEC FROM 120H
FILE: a121-l6010_120H_3ph_recl-2013WP-NS-import-200.out
CHNL# 146: [VOLT199280 [TUSKET A138.00]]
CHNL# 145: [VOLT199193 [HHWAS 138.00]]
CHNL# 144: [VOLT199165 [TUFTCOVE138.00]]
CHNL# 143: [VOLT199138 [SPRNGHILL138.00]]
CHNL# 142: [VOLT199090 [50N-TREN138.00]]
CHNL# 141: [VOLT199051 [HASTINGS138.00]]
TIME (SECONDS)
TUE, JAN 27 2009 15:55
138KV BUS VOLTS

2013 WINTER PEAK STORA 167, NS LOAD 2371
NS-NB=-200; NB-NE=300; CBX=543; ONI=773 ONS=863
3 PHASE FAULT ON L6010 AT 120H-BRUSHYHILL
CLEARED IN 6 CYCLES - RECLOSE ATTEMPT IN 3 SEC FROM 120H
FILE: a121-l6010_120H_3ph_recl-2013WP-NS-import-200.out
CHNL# 140: [VOLT199240 [BWATER A230.00]]
CHNL# 139: [VOLT199200 [BRUSHY 230.00]]
CHNL# 138: [VOLT199130 [ONSLOW 230.00]]
CHNL# 137: [VOLT199050 [HASTINGS230.00]]
CHNL# 136: [VOLT199044 [PT.ACONI230.00]]
CHNL# 135: [VOLT199000 [LINGAN 230.00]]
TIME (SECONDS)
TUE, JAN 27 2009 15:55
230KV BUS VOLTS

2013 WINTER PEAK STORA 167, NS LOAD 2371
NS-NB=-200; NB-NE=300; CBX=543; ONI=773 ONS=863
3 PHASE FAULT ON L6010 AT 120H-BRUSHYHILL
CLEARED IN 6 CYCLES - RECLOSE ATTEMPT IN 3 SEC FROM 120H
FILE: a121-l6010_120H_3ph_recl-2013WP-NS-import-200.out
CHNL# 217: [L6513MW]
CHNL# 215: [L6503MW]
CHNL# 197: [L8003MW]
CHNL# 195: [L8004MW]
CHNL# 193: [L8001MW]
CHNL# 221: [L3001MW]
TIME (SECONDS)
TUE, JAN 27 2009 15:55
LINE FLOW MW

2013 WINTER PEAK STORA 167, NS LOAD 2371
NS-NB=-200; NB-NE=300; CBX=543; ONI=773 ONS=863
3 PHASE FAULT ON L6010 AT 120H-BRUSHYHILL
CLEARED IN 6 CYCLES - RECLOSE ATTEMPT IN 3 SEC FROM 120H
FILE: a121-l6010_120H_3ph_recl-2013WP-NS-import-200.out
CHNL# 154: [IR141-DIGBYH69.0 VOLTS]
CHNL# 153: [IR137-STATIG25.0 VOLTS]
CHNL# 152: [IR114-GLENDH138.0 VOLTS]
CHNL# 151: [IR84-DALHOHV230.0 VOLTS]
CHNL# 150: [IR82 NUTBHV69.0 VOLTS]
CHNL# 149: [IR45 AMHERTP138.0 VOLTS]
TIME (SECONDS)
TUE, JAN 27 2009 15:55
WIND BUS VOLTS

2013 WINTER PEAK STORA 167, NS LOAD 2371
NS-NB=-200; NB-NE=300; CBX=543; ONI=773 ONS=863
3 PHASE FAULT ON L6010 AT 120H-BRUSHYHILL PRIMARY FAILS
CLEARED IN 6 CYCLES - RECLOSE ATTEMPT IN 3 SEC FROM 120H
FILE: a121F-l6010_120H_3ph_rect-2013WP-NS-import-200.out
CHNL#S 20.4: [ANGL199169] [TUFTCV3 14.400] [3] [ANGL156661] [DARL G1 22.000] [1]
CHNL#S 17.4: [ANGL199086] [TRENTON613.800] [6] [ANGL156661] [DARL G1 22.000] [1]
CHNL#S 16.4: [ANGL199085] [TRENTN5 13.800] [5] [ANGL156661] [DARL G1 22.000] [1]
CHNL#S 15.4: [ANGL199061] [TMP1 STO13.800] [1] [ANGL156661] [DARL G1 22.000] [1]
CHNL#S 13.4: [ANGL199043] [ACONIG1 20.000] [1 1] [ANGL156661] [DARL G1 22.000] [1]
CHNL#S 11.4: [ANGL199001] [LINGAN1 14.400] [1 1] [ANGL156661] [DARL G1 22.000] [1]
TIME (SECONDS)
TUE, JAN 27 2009 15:55
NS ANGLE

2013 WINTER PEAK STORA 167, NS LOAD 2371
NS-NB=-200; NB-NE=300; CBX=543; ONI=773 ONS=863
3 PHASE FAULT ON L6010 AT 120H-BRUSHYHILL PRIMARY FAILS
CLEARED IN 6 CYCLES - RECLOSE ATTEMPT IN 3 SEC FROM 120H
FILE: a121F-l6010_120H_3ph_rect-2013WP-NS-import-200.out
CHNL#S 10.4: [ANGL190472] [BLLDNG2 19.000] [1] [ANGL156661] [DARL G1 22.000] [1]
CHNL#S 6.4: [ANGL190456] [LEPRG1 26.000] [1] [ANGL156661] [DARL G1 22.000] [1]
CHNL#S 5.4: [ANGL190450] [MACTG1 13.800] [1] [ANGL156661] [DARL G1 22.000] [1]
CHNL#S 3.4: [ANGL126652] [RAV 3 22.000] [1] [ANGL156661] [DARL G1 22.000] [1]
CHNL#S 2.4: [ANGL101063] [MYST G7 22.000] [1] [ANGL156661] [DARL G1 22.000] [1]
CHNL#S 1.4: [ANGL100060] [MIS GT1 18.000] [1] [ANGL156661] [DARL G1 22.000] [1]
TIME (SECONDS)
TUE, JAN 27 2009 15:55
"NE,NY,NB ANGLE"

2013 WINTER PEAK STORA 167, NS LOAD 2371
NS-NB=-200; NB-NE=300; CBX=543; ONI=773 ONS=863
3 PHASE FAULT ON L6010 AT 120H-BRUSHYHILL PRIMARY FAILS
CLEARED IN 6 CYCLES - RECLOSE ATTEMPT IN 3 SEC FROM 120H
FILE: a121F-l6010_120H_3ph_rect-2013WP-NS-import-200.out
CHNL# 59: [POWER199169] [TUFTCV3 14.400] [3 1]
CHNL# 56: [POWER199086] [TRENTON613.800] [6 1]
CHNL# 55: [POWER199085] [TRENTN5 13.800] [5 1]
CHNL# 54: [POWER199061] [TMP1 STO13.800] [1 1]
CHNL# 52: [POWER199043] [ACONIG1 20.000] [1 1]
CHNL# 50: [POWER199001] [LINGAN1 14.400] [1 1]
TIME (SECONDS)
TUE, JAN 27 2009 15:55
NS MW

2013 WINTER PEAK STORA 167, NS LOAD 2371
NS-NB=-200; NB-NE=300; CBX=543; ONI=773 ONS=863
3 PHASE FAULT ON L6010 AT 120H-BRUSHYHILL PRIMARY FAILS
CLEARED IN 6 CYCLES - RECLOSE ATTEMPT IN 3 SEC FROM 120H
FILE: a121F-l6010_120H_3ph_rect-2013WP-NS-import-200.out
CHNL# 49: [POWER190472] [BLLDNG2 19.000] [1]
CHNL# 45: [POWER190456] [LEPRG1 26.000] [1]
CHNL# 44: [POWER190450] [MACTG1 13.800] [1]
CHNL# 42: [POWER126652] [RAV 3 22.000] [1]
CHNL# 41: [POWER101063] [MYST G7 22.000] [1]
CHNL# 40: [POWER100060] [MIS GT1 18.000] [1]
TIME (SECONDS)
TUE, JAN 27 2009 15:55
"NE,NY,NB POWER"

2013 WINTER PEAK STORA 167, NS LOAD 2371
NS-NB=-200; NB-NE=300; CBX=543; ONI=773 ONS=863
3 PHASE FAULT ON L6010 AT 120H-BRUSHYHILL PRIMARY FAILS
CLEARED IN 6 CYCLES - RECLOSE ATTEMPT IN 3 SEC FROM 120H
FILE: a121F-l6010_120H_3ph_rect-2013WP-NS-import-200.out
CHNL# 114: [VARS IR45_AMHERST]
CHNL# 115: [VARS IR82_NUTTBY]
CHNL# 116: [VARS IR84-DALHOUSIE]
CHNL# 117: [VARS IR114-GLENDHU]
CHNL# 118: [VARS IR137-STATIA]
CHNL# 119: [VARS IR141-DIGBY]
TIME (SECONDS)
TUE, JAN 27 2009 15:55
NS WIND MV

2013 WINTER PEAK STORA 167, NS LOAD 2371
NS-NB=-200; NB-NE=300; CBX=543; ONI=773 ONS=863
3 PHASE FAULT ON L6010 AT 120H-BRUSHYHILL PRIMARY FAILS
CLEARED IN 6 CYCLES - RECLOSE ATTEMPT IN 3 SEC FROM 120H
FILE: a121F-l6010_120H_3ph_rect-2013WP-NS-import-200.out
CHNL# 74: [POWER IR45_AMHERST]
CHNL# 75: [POWER IR82_NUTTBY]
CHNL# 76: [POWER IR84-DALHOUSIE]
CHNL# 77: [POWER IR114-GLENDHU]
CHNL# 78: [POWER IR137-STATIA]
CHNL# 79: [POWER IR141-DIGBY]
TIME (SECONDS)
TUE, JAN 27 2009 15:55
NS WIND MW

2013 WINTER PEAK STORA 167, NS LOAD 2371
NS-NB=-200; NB-NE=300; CBX=543; ONI=773 ONS=863
3 PHASE FAULT ON L6010 AT 120H-BRUSHYHILL PRIMARY FAILS
CLEARED IN 6 CYCLES - RECLOSE ATTEMPT IN 3 SEC FROM 120H
FILE: a121F-l6010_120H_3ph_rect-2013WP-NS-import-200.out
CHNL# 127: [VOLT 70002 [ORRINGTN345.00]]
CHNL# 128: [VOLT190004 [KESWICK 345.00]]
CHNL# 130: [VOLT190320 [SALBRY 345.00]]
CHNL# 131: [VOLT199045 [WOODBINE345.00]]
CHNL# 132: [VOLT199120 [HOPEWELL345.00]]
CHNL# 133: [VOLT199125 [ONSLOW 345.00]]
TIME (SECONDS)
TUE, JAN 27 2009 15:55
"345KV VOLTAGE"

2013 WINTER PEAK STORA 167, NS LOAD 2371
NS-NB=-200; NB-NE=300; CBX=543; ONI=773 ONS=863
3 PHASE FAULT ON L6010 AT 120H-BRUSHYHILL PRIMARY FAILS
CLEARED IN 6 CYCLES - RECLOSE ATTEMPT IN 3 SEC FROM 120H
FILE: a121F-l6010_120H_3ph_rect-2013WP-NS-import-200.out
CHNL# 120: 60*(1+[FREQ 70002 [ORRINGTN345.00]])
CHNL# 121: 60*(1+[FREQ190197 [C.COVE 345.00]])
CHNL# 122: 60*(1+[FREQ190320 [SALBRY 345.00]])
CHNL# 123: 60*(1+[FREQ199045 [WOODBINE345.00]])
CHNL# 124: 60*(1+[FREQ199120 [HOPEWELL345.00]])
CHNL# 125: 60*(1+[FREQ199125 [ONSLOW 345.00]])
TIME (SECONDS)
TUE, JAN 27 2009 15:55
FREQUENCY HZ

2013 WINTER PEAK STORA 167, NS LOAD 2371
NS-NB=-200; NB-NE=300; CBX=543; ONI=773 ONS=863
3 PHASE FAULT ON L6010 AT 120H-BRUSHYHILL PRIMARY FAILS
CLEARED IN 6 CYCLES - RECLOSE ATTEMPT IN 3 SEC FROM 120H
FILE: a121F-l6010_120H_3ph_rect-2013WP-NS-import-200.out
CHNL# 146: [VOLT199280 [TUSKET A138.00]]
CHNL# 145: [VOLT199193 [HHWAS 138.00]]
CHNL# 144: [VOLT199165 [TUFTCOVE138.00]]
CHNL# 143: [VOLT199138: [SPRNGHILL138.00]]
CHNL# 142: [VOLT199090 [50N-TREN138.00]]
CHNL# 141: [VOLT199051 [HASTINGS138.00]]
TIME (SECONDS)
TUE, JAN 27 2009 15:55
138KV BUS VOLTS

2013 WINTER PEAK STORA 167, NS LOAD 2371
NS-NB=-200; NB-NE=300; CBX=543; ONI=773 ONS=863
3 PHASE FAULT ON L6010 AT 120H-BRUSHYHILL PRIMARY FAILS
CLEARED IN 6 CYCLES - RECLOSE ATTEMPT IN 3 SEC FROM 120H
FILE: a121F-l6010_120H_3ph_rect-2013WP-NS-import-200.out
CHNL# 140: [VOLT199240 [BWATER A230.00]]
CHNL# 139: [VOLT199200 [BRUSHY 230.00]]
CHNL# 138: [VOLT199130 [ONSLOW 230.00]]
CHNL# 137: [VOLT199050 [HASTINGS230.00]]
CHNL# 136: [VOLT199044 [PT.ACONI230.00]]
CHNL# 135: [VOLT199000 [LINGAN 230.00]]
TIME (SECONDS)
TUE, JAN 27 2009 15:55
230KV BUS VOLTS

2013 WINTER PEAK STORA 167, NS LOAD 2371
NS-NB=-200; NB-NE=300; CBX=543; ONI=773 ONS=863
3 PHASE FAULT ON L6010 AT 120H-BRUSHYHILL PRIMARY FAILS
CLEARED IN 6 CYCLES - RECLOSE ATTEMPT IN 3 SEC FROM 120H
FILE: a121F-l6010_120H_3ph_rect-2013WP-NS-import-200.out
CHNL# 217: [L6533MW]
CHNL# 215: [L6503MW]
CHNL# 197: [L8003MW]
CHNL# 195: [L8004MW]
CHNL# 193: [L8001MW]
CHNL# 221: [L3001MW]
TIME (SECONDS)
TUE, JAN 27 2009 15:55
LINE FLOW MW

2013 WINTER PEAK STORA 167, NS LOAD 2371
NS-NB=-200; NB-NE=300; CBX=543; ONI=773 ONS=863
3 PHASE FAULT ON L6010 AT 120H-BRUSHYHILL PRIMARY FAILS
CLEARED IN 6 CYCLES - RECLOSE ATTEMPT IN 3 SEC FROM 120H
FILE: a121F-l6010_120H_3ph_rect-2013WP-NS-import-200.out
CHNL# 154: [IR141-DIGBYH69.0 VOLTS]
CHNL# 153: [IR137-STATIG25.0 VOLTS]
CHNL# 152: [IR114-GLENDH138.0 VOLTS]
CHNL# 151: [IR84-DALHOHV230.0 VOLTS]
CHNL# 150: [IR82 NUTBHV69.0 VOLTS]
CHNL# 149: [IR45 AMHERTP138.0 VOLTS]
TIME (SECONDS)
TUE, JAN 27 2009 15:55
WIND BUS VOLTS

2013 WINTER PEAK STORA 167, NS LOAD 2371
NS-NB=-200; NB-NE=300; CBX=543; ONI=773 ONS=863
3 PHASE FAULT ON L6042 AT 113H-DARTEAST
CLEARED IN 6 CYCLES - RECLOSE ATTEMPT IN 5 SEC FROM 91H
FILE: a122-l6042_113H_3ph_recl-2013WP-NS-import-200.out
CHNL# 20: [ANGL199169 [TUFTCV3 14.400] [3]] [ANGL156661 [DARL G1 22.000] [1]
CHNL# 17: [ANGL199086 [TRENTON613.800] [6]] [ANGL156661 [DARL G1 22.000] [1]
CHNL# 16: [ANGL199085 [TRENTN5 13.800] [5]] [ANGL156661 [DARL G1 22.000] [1]
CHNL# 15: [ANGL199061 [TMP1 STO13.800] [1]] [ANGL156661 [DARL G1 22.000] [1]
CHNL# 13: [ANGL199043 [ACONIG1 20.000] [1]] [ANGL156661 [DARL G1 22.000] [1]
CHNL# 11: [ANGAN1 14.400] [1]] [ANGL156661 [DARL G1 22.000] [1]
TUE, JAN 27 2009 15:55
NS ANGLE
TIME (SECONDS)

2013 WINTER PEAK STORA 167, NS LOAD 2371
NS-NB=-200; NB-NE=300; CBX=543; ONI=773 ONS=863
3 PHASE FAULT ON L6042 AT 113H-DARTEAST
CLEARED IN 6 CYCLES - RECLOSE ATTEMPT IN 5 SEC FROM 91H
FILE: a122-l6042_113H_3ph_recl-2013WP-NS-import-200.out
CHNL# 10: [ANGL190472 [BLLDNG2 19.000] [1]] [ANGL156661 [DARL G1 22.000] [1]
CHNL# 6: [ANGL190456 [LEPRG1 26.000] [1]] [ANGL156661 [DARL G1 22.000] [1]
CHNL# 5: [ANGL190450 [MACTG1 13.800] [1]] [ANGL156661 [DARL G1 22.000] [1]
CHNL# 3: [ANGL126652 [RAV 3 22.000] [1]] [ANGL156661 [DARL G1 22.000] [1]
CHNL# 2: [ANGL101063 [MYST G7 22.000] [1]] [ANGL156661 [DARL G1 22.000] [1]
CHNL# 1: [ANGL100060 [MIS GT1 18.000] [1]] [ANGL156661 [DARL G1 22.000] [1]
TUE, JAN 27 2009 15:55
"NE,NY,NB ANGLE"
TIME (SECONDS)

2013 WINTER PEAK STORA 167, NS LOAD 2371
NS-NB=-200; NB-NE=300; CBX=543; ONI=773 ONS=863
3 PHASE FAULT ON L6042 AT 113H-DARTEAST
CLEARED IN 6 CYCLES - RECLOSE ATTEMPT IN 5 SEC FROM 91H
FILE: a122-l6042_113H_3ph_recl-2013WP-NS-import-200.out
CHNL# 59: [POWER199169 [TUFTCV3 14.400] [3]]
CHNL# 56: [POWER199086 [TRENTON613.800] [6]]
CHNL# 55: [POWER199085 [TRENTN5 13.800] [5]]
CHNL# 54: [POWER199061 [TMP1 STO13.800] [1]]
CHNL# 52: [POWER199043 [ACONIG1 20.000] [1]]
CHNL# 50: [POWER199001 [LINGAN1 14.400] [1]]
TUE, JAN 27 2009 15:55
NS MW
TIME (SECONDS)

2013 WINTER PEAK STORA 167, NS LOAD 2371
NS-NB=-200; NB-NE=300; CBX=543; ONI=773 ONS=863
3 PHASE FAULT ON L6042 AT 113H-DARTEAST
CLEARED IN 6 CYCLES - RECLOSE ATTEMPT IN 5 SEC FROM 91H
FILE: a122-l6042_113H_3ph_recl-2013WP-NS-import-200.out
CHNL# 49: [POWER190472 [BLLDNG2 19.000] [1]]
CHNL# 45: [POWER190456 [LEPRG1 26.000] [1]]
CHNL# 44: [POWER190450 [MACTG1 13.800] [1]]
CHNL# 42: [POWER126652 [RAV 3 22.000] [1]]
CHNL# 41: [POWER101063 [MYST G7 22.000] [1]]
CHNL# 40: [POWER100060 [MIS GT1 18.000] [1]]
TUE, JAN 27 2009 15:55
"NE,NY,NB POWER"
TIME (SECONDS)

NS WIND MV

NS WIND MW

"345KV VOLTAGE"

FREQUENCY HZ

2013 WINTER PEAK STORA 167, NS LOAD 2371
NS-NB=-200; NB-NE=300; CBX=543; ONI=773 ONS=863
3 PHASE FAULT ON L6042 AT 113H-DARTEAST
CLEARED IN 6 CYCLES - RECLOSE ATTEMPT IN 5 SEC FROM 91H
FILE: a122-l6042_113H_3ph_recl-2013WP-NS-import-200.out
CHNL# 146: [VOLT199280 [TUSKET A138.00]]
CHNL# 145: [VOLT199193 [HHWAS 138.00]]
CHNL# 144: [VOLT199165 [TUFTCOVE138.00]]
CHNL# 143: [VOLT199135 [SPRNGHILL138.00]]
CHNL# 142: [VOLT199090 [50N-TREN138.00]]
CHNL# 141: [VOLT199051 [HASTINGS138.00]]
TIME (SECONDS)
TUE, JAN 27 2009 15:55
138KV BUS VOLTS

2013 WINTER PEAK STORA 167, NS LOAD 2371
NS-NB=-200; NB-NE=300; CBX=543; ONI=773 ONS=863
3 PHASE FAULT ON L6042 AT 113H-DARTEAST
CLEARED IN 6 CYCLES - RECLOSE ATTEMPT IN 5 SEC FROM 91H
FILE: a122-l6042_113H_3ph_recl-2013WP-NS-import-200.out
CHNL# 140: [VOLT199240 [BWATER A230.00]]
CHNL# 139: [VOLT199200 [BRUSHY 230.00]]
CHNL# 138: [VOLT199130 [ONSLOW 230.00]]
CHNL# 137: [VOLT199050 [HASTINGS230.00]]
CHNL# 136: [VOLT199044 [PT.ACONI230.00]]
CHNL# 135: [VOLT199000 [LINGAN 230.00]]
TIME (SECONDS)
TUE, JAN 27 2009 15:55
230KV BUS VOLTS

2013 WINTER PEAK STORA 167, NS LOAD 2371
NS-NB=-200; NB-NE=300; CBX=543; ONI=773 ONS=863
3 PHASE FAULT ON L6042 AT 113H-DARTEAST
CLEARED IN 6 CYCLES - RECLOSE ATTEMPT IN 5 SEC FROM 91H
FILE: a122-l6042_113H_3ph_recl-2013WP-NS-import-200.out
CHNL# 217: [L6533MW]
CHNL# 215: [L6503MW]
CHNL# 197: [L8003MW]
CHNL# 195: [L8004MW]
CHNL# 193: [L8001MW]
CHNL# 221: [L3001MW]
TIME (SECONDS)
TUE, JAN 27 2009 15:55
LINE FLOW MW

2013 WINTER PEAK STORA 167, NS LOAD 2371
NS-NB=-200; NB-NE=300; CBX=543; ONI=773 ONS=863
3 PHASE FAULT ON L6042 AT 113H-DARTEAST
CLEARED IN 6 CYCLES - RECLOSE ATTEMPT IN 5 SEC FROM 91H
FILE: a122-l6042_113H_3ph_recl-2013WP-NS-import-200.out
CHNL# 154: [IR141-DIGBYH69.0 VOLTS]
CHNL# 153: [IR137-STATIG25.0 VOLTS]
CHNL# 152: [IR114-GLENDH138.0 VOLTS]
CHNL# 151: [IR84-DALHOHV230.0 VOLTS]
CHNL# 150: [IR82_NUTBHV69.0 VOLTS]
CHNL# 149: [IR45_AMHERTP138.0 VOLTS]
TIME (SECONDS)
TUE, JAN 27 2009 15:55
WIND BUS VOLTS

2013 WINTER PEAK STORA 167, NS LOAD 2371
NS-NB=-200; NB-NE=300; CBX=543; ONI=773 ONS=863
3 PHASE FAULT ON L6042 AT 113H-DARTEAST PRIMARY FAILS
CLEARED IN 6 CYCLES - RECLOSE ATTEMPT IN 5 SEC FROM 91H
FILE: a122F-l6042_113H_3ph_rect-2013WP-NS-import-200.out
TIME (SECONDS)
TUE, JAN 27 2009 15:55
NS ANGLE

2013 WINTER PEAK STORA 167, NS LOAD 2371
NS-NB=-200; NB-NE=300; CBX=543; ONI=773 ONS=863
3 PHASE FAULT ON L6042 AT 113H-DARTEAST PRIMARY FAILS
CLEARED IN 6 CYCLES - RECLOSE ATTEMPT IN 5 SEC FROM 91H
FILE: a122F-l6042_113H_3ph_rect-2013WP-NS-import-200.out
TIME (SECONDS)
TUE, JAN 27 2009 15:55
"NE,NY,NB ANGLE"

2013 WINTER PEAK STORA 167, NS LOAD 2371
NS-NB=-200; NB-NE=300; CBX=543; ONI=773 ONS=863
3 PHASE FAULT ON L6042 AT 113H-DARTEAST PRIMARY FAILS
CLEARED IN 6 CYCLES - RECLOSE ATTEMPT IN 5 SEC FROM 91H
FILE: a122F-l6042_113H_3ph_rect-2013WP-NS-import-200.out
TIME (SECONDS)
TUE, JAN 27 2009 15:55
NS MW

2013 WINTER PEAK STORA 167, NS LOAD 2371
NS-NB=-200; NB-NE=300; CBX=543; ONI=773 ONS=863
3 PHASE FAULT ON L6042 AT 113H-DARTEAST PRIMARY FAILS
CLEARED IN 6 CYCLES - RECLOSE ATTEMPT IN 5 SEC FROM 91H
FILE: a122F-l6042_113H_3ph_rect-2013WP-NS-import-200.out
TIME (SECONDS)
TUE, JAN 27 2009 15:55
"NE,NY,NB POWER"

2013 WINTER PEAK STORA 167, NS LOAD 2371
NS-NB=-200; NB-NE=300; CBX=543; ONI=773 ONS=863
3 PHASE FAULT ON L6042 AT 113H-DARTEAST PRIMARY FAILS
CLEARED IN 6 CYCLES - RECLOSE ATTEMPT IN 5 SEC FROM 91H
FILE: a122F-l6042_113H_3ph_rect-2013WP-NS-import-200.out
CHNL# 119: [VARS IR141-DIGBY]
CHNL# 118: [VARS IR137-STATIA]
CHNL# 117: [VARS IR114-GLENDHU]
CHNL# 116: [VARS IR84-DALHOUSIE]
CHNL# 115: [VARS IR82_NUTTBY]
CHNL# 114: [VARS IR45_AMHERST]
TIME (SECONDS)
TUE, JAN 27 2009 15:55
NS WIND MV

2013 WINTER PEAK STORA 167, NS LOAD 2371
NS-NB=-200; NB-NE=300; CBX=543; ONI=773 ONS=863
3 PHASE FAULT ON L6042 AT 113H-DARTEAST PRIMARY FAILS
CLEARED IN 6 CYCLES - RECLOSE ATTEMPT IN 5 SEC FROM 91H
FILE: a122F-l6042_113H_3ph_rect-2013WP-NS-import-200.out
CHNL# 79: [POWER IR141-DIGBY]
CHNL# 78: [POWER IR137-STATIA]
CHNL# 77: [POWER IR114-GLENDHU]
CHNL# 76: [POWER IR84-DALHOUSIE]
CHNL# 75: [POWER IR82_NUTTBY]
CHNL# 74: [POWER IR45_AMHERST]
TIME (SECONDS)
TUE, JAN 27 2009 15:55
NS WIND MW

2013 WINTER PEAK STORA 167, NS LOAD 2371
NS-NB=-200; NB-NE=300; CBX=543; ONI=773 ONS=863
3 PHASE FAULT ON L6042 AT 113H-DARTEAST PRIMARY FAILS
CLEARED IN 6 CYCLES - RECLOSE ATTEMPT IN 5 SEC FROM 91H
FILE: a122F-l6042_113H_3ph_rect-2013WP-NS-import-200.out
CHNL# 133: [VOLT199125 [ONSLOW 345.00]]
CHNL# 132: [VOLT199120 [HOPEWELL345.00]]
CHNL# 131: [VOLT199045 [WOODBINE345.00]]
CHNL# 130: [VOLT190320 [SALBRY 345.00]]
CHNL# 128: [VOLT190004 [KESWICK 345.00]]
CHNL# 127: [VOLT 70002 [ORRINGTN345.00]]
TIME (SECONDS)
TUE, JAN 27 2009 15:55
"345KV VOLTAGE"

2013 WINTER PEAK STORA 167, NS LOAD 2371
NS-NB=-200; NB-NE=300; CBX=543; ONI=773 ONS=863
3 PHASE FAULT ON L6042 AT 113H-DARTEAST PRIMARY FAILS
CLEARED IN 6 CYCLES - RECLOSE ATTEMPT IN 5 SEC FROM 91H
FILE: a122F-l6042_113H_3ph_rect-2013WP-NS-import-200.out
CHNL# 125: 60*(1+[FREQ199125 [ONSLOW 345.00]])
CHNL# 124: 60*(1+[FREQ199120 [HOPEWELL345.00]])
CHNL# 123: 60*(1+[FREQ199045 [WOODBINE345.00]])
CHNL# 122: 60*(1+[FREQ190320 [SALBRY 345.00]])
CHNL# 121: 60*(1+[FREQ190197 [C.COVE 345.00]])
CHNL# 120: 60*(1+[FREQ 70002 [ORRINGTN345.00]])
TIME (SECONDS)
TUE, JAN 27 2009 15:55
FREQUENCY HZ

2013 WINTER PEAK STORA 167, NS LOAD 2371
NS-NB=-200; NB-NE=300; CBX=543; ONI=773 ONS=863
3 PHASE FAULT ON L6042 AT 113H-DARTEAST PRIMARY FAILS
CLEARED IN 6 CYCLES - RECLOSE ATTEMPT IN 5 SEC FROM 91H
FILE: a122F-l6042_113H_3ph_rect-2013WP-NS-import-200.out
CHNL# 146: [VOLT199280 [TUSKET A138.00]]
CHNL# 145: [VOLT199193 [HHWAS 138.00]]
CHNL# 144: [VOLT199165 [TUFTCOVE138.00]]
CHNL# 143: [VOLT199138: [SPRNGHILL138.00]]
CHNL# 142: [VOLT199090 [SON-TREN138.00]]
CHNL# 141: [VOLT199051 [HASTINGS138.00]]
TIME (SECONDS)
TUE, JAN 27 2009 15:55
138KV BUS VOLTS

2013 WINTER PEAK STORA 167, NS LOAD 2371
NS-NB=-200; NB-NE=300; CBX=543; ONI=773 ONS=863
3 PHASE FAULT ON L6042 AT 113H-DARTEAST PRIMARY FAILS
CLEARED IN 6 CYCLES - RECLOSE ATTEMPT IN 5 SEC FROM 91H
FILE: a122F-l6042_113H_3ph_rect-2013WP-NS-import-200.out
CHNL# 140: [VOLT199240 [BWATER A230.00]]
CHNL# 139: [VOLT199200 [BRUSHY 230.00]]
CHNL# 138: [VOLT199130 [ONSLOW 230.00]]
CHNL# 137: [VOLT199050 [HASTINGS230.00]]
CHNL# 136: [VOLT199044 [PT.ACONI230.00]]
CHNL# 135: [VOLT199000 [LINGAN 230.00]]
TIME (SECONDS)
TUE, JAN 27 2009 15:55
230KV BUS VOLTS

2013 WINTER PEAK STORA 167, NS LOAD 2371
NS-NB=-200; NB-NE=300; CBX=543; ONI=773 ONS=863
3 PHASE FAULT ON L6042 AT 113H-DARTEAST PRIMARY FAILS
CLEARED IN 6 CYCLES - RECLOSE ATTEMPT IN 5 SEC FROM 91H
FILE: a122F-l6042_113H_3ph_rect-2013WP-NS-import-200.out
CHNL# 217: [L6533MW]
CHNL# 215: [L6503MW]
CHNL# 197: [L8003MW]
CHNL# 195: [L8004MW]
CHNL# 193: [L8001MW]
CHNL# 221: [L3001MW]
TIME (SECONDS)
TUE, JAN 27 2009 15:55
LINE FLOW MW

2013 WINTER PEAK STORA 167, NS LOAD 2371
NS-NB=-200; NB-NE=300; CBX=543; ONI=773 ONS=863
3 PHASE FAULT ON L6042 AT 113H-DARTEAST PRIMARY FAILS
CLEARED IN 6 CYCLES - RECLOSE ATTEMPT IN 5 SEC FROM 91H
FILE: a122F-l6042_113H_3ph_rect-2013WP-NS-import-200.out
CHNL# 154: [IR141-DIGBYH69.0 VOLTS]
CHNL# 153: [IR137-STATIG25.0 VOLTS]
CHNL# 152: [IR114-GLENDH138.0 VOLTS]
CHNL# 151: [IR84-DALHOHV230.0 VOLTS]
CHNL# 150: [IR82_NUTBHV69.0 VOLTS]
CHNL# 149: [IR45_AMHERTP138.0 VOLTS]
TIME (SECONDS)
TUE, JAN 27 2009 15:55
WIND BUS VOLTS

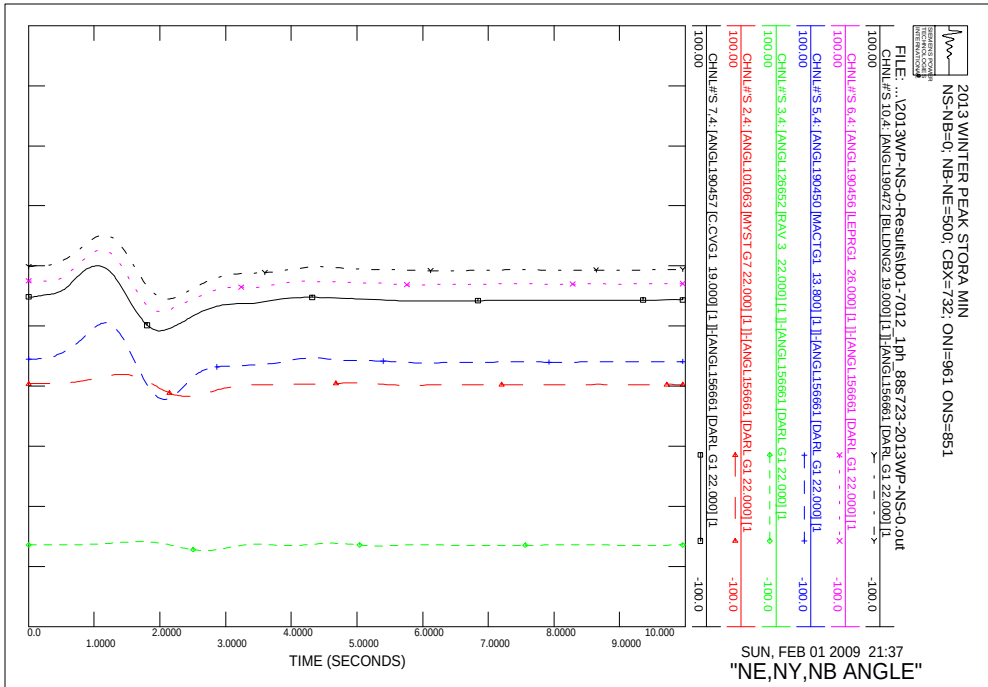
2013 WINTER PEAK STORA MIN
NS-NB=0; NB-NE=500; CBX=732; ONI=961 ONS=851
FILE: ...\2013WP-NS-0-Results\b01-7012_1ph_88s723-2013WP-NS-0.out
CHNL#S 10,4: [ANGL190472 [BLLDNG2 19.000] [1]]-[ANGL156661 [DARL G1 22.000] [1]
CHNL#S 6,4: [ANGL190456 [LEPRG1 26.000] [1]]-[ANGL156661 [DARL G1 22.000] [1]
CHNL#S 5,4: [ANGL190450 [MACTG1 13.800] [1]]-[ANGL156661 [DARL G1 22.000] [1]
CHNL#S 3,4: [ANGL126652 [RAV 3 22.000] [1]]-[ANGL156661 [DARL G1 22.000] [1]
CHNL#S 2,4: [ANGL101063 [MYST G7 22.000] [1]]-[ANGL156661 [DARL G1 22.000] [1]
CHNL#S 7,4: [ANGL190457 [C.CVG1 19.000] [1]]-[ANGL156661 [DARL G1 22.000] [1]
TIME (SECONDS)
SUN, FEB 01 2009 21:37
"NE,NY,NB ANGLE"

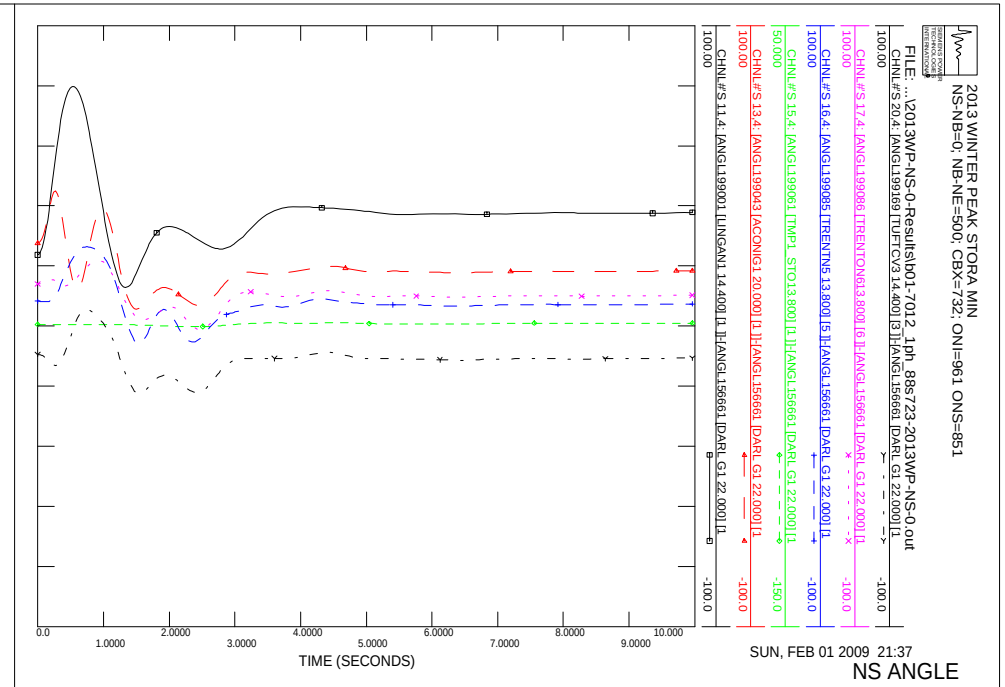
2013 WINTER PEAK STORA MIN
NS-NB=0; NB-NE=500; CBX=732; ONI=961 ONS=851
FILE: ...\2013WP-NS-0-Results\b01-7012_1ph_88s723-2013WP-NS-0.out
CHNL#S 20,4: [ANGL199169 [TUFTCV3 14.400] [3]]-[ANGL156661 [DARL G1 22.000] [1]
CHNL#S 17,4: [ANGL199086 [TRENTON613.800] [6]]-[ANGL156661 [DARL G1 22.000] [1]
CHNL#S 16,4: [ANGL199085 [TRENTN5 13.800] [5]]-[ANGL156661 [DARL G1 22.000] [1]
CHNL#S 15,4: [ANGL199061 [TMP1 STO13.800] [1]]-[ANGL156661 [DARL G1 22.000] [1]
CHNL#S 13,4: [ANGL199043 [ACONIG1 20.000] [1]]-[ANGL156661 [DARL G1 22.000] [1]
CHNL#S 11,4: [ANGL199001 [LINGAN1 14.400] [1]]-[ANGL156661 [DARL G1 22.000] [1]
TIME (SECONDS)
SUN, FEB 01 2009 21:37
NS ANGLE

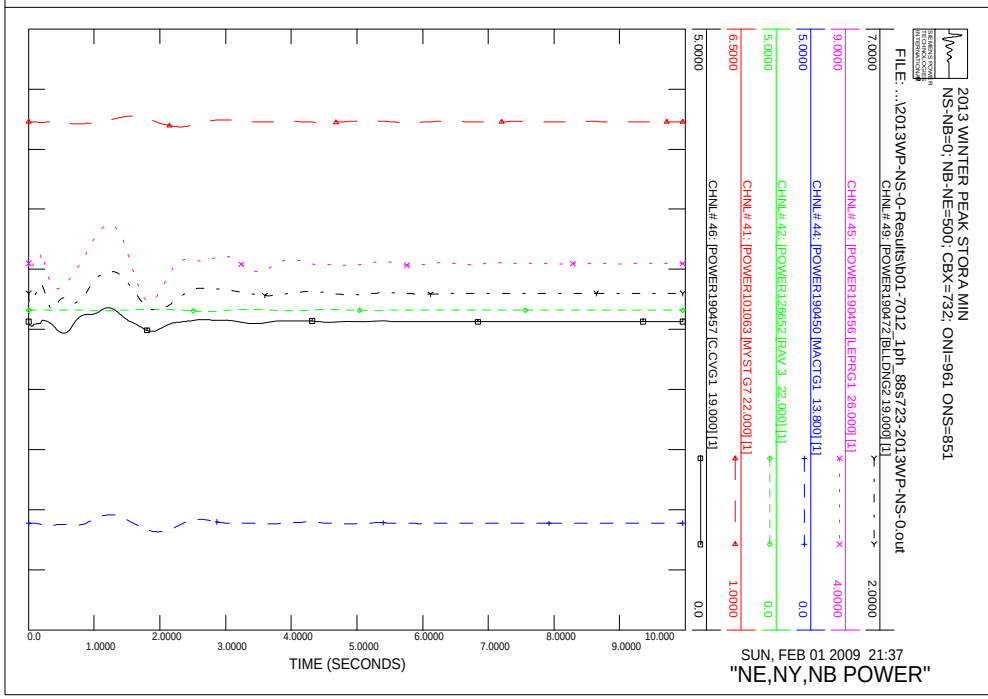
2013 WINTER PEAK STORA MIN
NS-NB=0; NB-NE=500; CBX=732; ONI=961 ONS=851
FILE: ...\2013WP-NS-0-Results\b01-7012_1ph_88s723-2013WP-NS-0.out
CHNL# 49: [POWER190472 [BLLDNG2 19.000] [1]]
CHNL# 45: [POWER190456 [LEPRG1 26.000] [1]]
CHNL# 44: [POWER190450 [MACTG1 13.800] [1]]
CHNL# 42: [POWER126652 [RAV 3 22.000] [1]]
CHNL# 41: [POWER101063 [MYST G7 22.000] [1]]
CHNL# 46: [POWER190457 [C.CVG1 19.000] [1]]
TIME (SECONDS)
SUN, FEB 01 2009 21:37
"NE,NY,NB POWER"

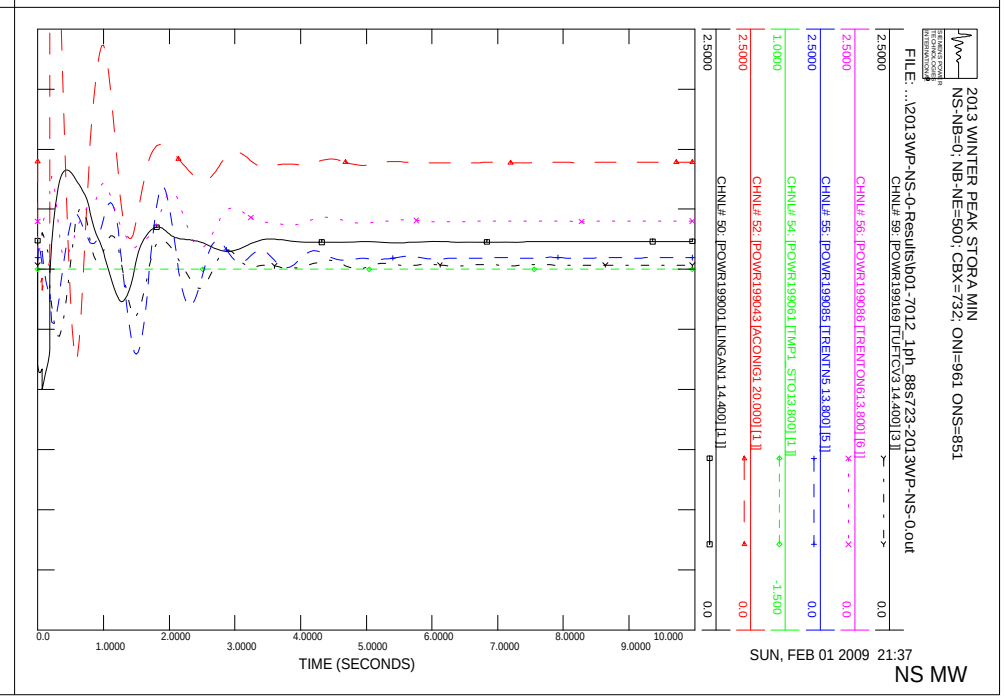
2013 WINTER PEAK STORA MIN
NS-NB=0; NB-NE=500; CBX=732; ONI=961 ONS=851
FILE: ...\2013WP-NS-0-Results\b01-7012_1ph_88s723-2013WP-NS-0.out
CHNL# 59: [POWER199169 [TUFTCV3 14.400] [3]]
CHNL# 56: [POWER199086 [TRENTON613.800] [6]]
CHNL# 55: [POWER199085 [TRENTN5 13.800] [5]]
CHNL# 54: [POWER199061 [TMP1 STO13.800] [1]]
CHNL# 52: [POWER199043 [ACONIG1 20.000] [1]]
CHNL# 50: [POWER199001 [LINGAN1 14.400] [1]]
TIME (SECONDS)
SUN, FEB 01 2009 21:37
NS MW

2013 WINTER PEAK STORA MIN
NS-NB=0; NB-NE=500; CBX=732; ONI=961 ONS=851
FILE: ...\2013WP-NS-0-Results\b01-7012_1ph_88s723-2013WP-NS-0.out
CHNL# 119: [VARS IR141-DIGBY]
CHNL# 118: [VARS IR137-STATIA]
CHNL# 117: [VARS IR114-GLENDHU]
CHNL# 116: [VARS IR84-DALHOUSIE]
CHNL# 115: [VARS IR82_NUTTBY]
CHNL# 114: [VARS IR45_AMHERST]
0.50000
-0.5000
0.0
1.0000
2.0000
3.0000
4.0000
5.0000
6.0000
7.0000
8.0000
9.0000
10.000
TIME (SECONDS)
SUN, FEB 01 2009 21:37
NS WIND MV

2013 WINTER PEAK STORA MIN
NS-NB=0; NB-NE=500; CBX=732; ONI=961 ONS=851
FILE: ...\2013WP-NS-0-Results\b01-7012_1ph_88s723-2013WP-NS-0.out
CHNL# 79: [POWER IR141-DIGBY]
CHNL# 78: [POWER IR137-STATIA]
CHNL# 77: [POWER IR114-GLENDHU]
CHNL# 76: [POWER IR84-DALHOUSIE]
CHNL# 75: [POWER IR82_NUTTBY]
CHNL# 74: [POWER IR45_AMHERST]
1.0000
0.0
1.0000
2.0000
3.0000
4.0000
5.0000
6.0000
7.0000
8.0000
9.0000
10.000
TIME (SECONDS)
SUN, FEB 01 2009 21:37
NS WIND MW

2013 WINTER PEAK STORA MIN
NS-NB=0; NB-NE=500; CBX=732; ONI=961 ONS=851
FILE: ...\2013WP-NS-0-Results\b01-7012_1ph_88s723-2013WP-NS-0.out
CHNL# 133: [VOLT199125 [ONSLOW 345.00]]
CHNL# 132: [VOLT199120 [HOPEWELL345.00]]
CHNL# 131: [VOLT199045 [WOODBINE345.00]]
CHNL# 130: [VOLT190320 [SALBRY 345.00]]
CHNL# 128: [VOLT190004 [KESWICK 345.00]]
CHNL# 127: [VOLT 70002 [ORRINGTN345.00]]
1.1000
0.90000
0.0
1.0000
2.0000
3.0000
4.0000
5.0000
6.0000
7.0000
8.0000
9.0000
10.000
TIME (SECONDS)
SUN, FEB 01 2009 21:37
"345KV VOLTAGE"

2013 WINTER PEAK STORA MIN
NS-NB=0; NB-NE=500; CBX=732; ONI=961 ONS=851
FILE: ...\2013WP-NS-0-Results\b01-7012_1ph_88s723-2013WP-NS-0.out
CHNL# 125: [60*(1+[FREQ199125 [ONSLOW 345.00]])]
CHNL# 124: [60*(1+[FREQ199120 [HOPEWELL345.00]])]
CHNL# 123: [60*(1+[FREQ199045 [WOODBINE345.00]])]
CHNL# 122: [60*(1+[FREQ190320 [SALBRY 345.00]])]
CHNL# 121: [60*(1+[FREQ190197 [C.COVE 345.00]])]
CHNL# 120: [60*(1+[FREQ 70002 [ORRINGTN345.00]])]
60.500
59.500
0.0
1.0000
2.0000
3.0000
4.0000
5.0000
6.0000
7.0000
8.0000
9.0000
10.000
TIME (SECONDS)
SUN, FEB 01 2009 21:37
FREQUENCY HZ

2013 WINTER PEAK STORA MIN
NS-NB=0; NB-NE=500; CBX=732; ONI=961 ONS=851
FILE: ...\2013WP-NS-0-Results\b01-7012_1ph_88s723-2013WP-NS-0.out
CHNL# 146: [VOLT199280 [TUSKET A138.00]] 0.70000
CHNL# 145: [VOLT199193 [HHWAS 138.00]] 0.70000
CHNL# 144: [VOLT199165 [TUFTCOVE138.00]] 0.70000
CHNL# 143: [VOLT199135 [SPRNGHILL138.00]] 0.70000
CHNL# 142: [VOLT199090 [SON-TREN138.00]] 0.70000
CHNL# 141: [VOLT199051 [HASTINGS138.00]] 0.70000
TIME (SECONDS)
SUN, FEB 01 2009 21:37
138KV BUS VOLTS

2013 WINTER PEAK STORA MIN
NS-NB=0; NB-NE=500; CBX=732; ONI=961 ONS=851
FILE: ...\2013WP-NS-0-Results\b01-7012_1ph_88s723-2013WP-NS-0.out
CHNL# 140: [VOLT199240 [BWATER A230.00]] 0.70000
CHNL# 139: [VOLT199200 [BRUSHY 230.00]] 0.70000
CHNL# 138: [VOLT199130 [ONSLOW 230.00]] 0.70000
CHNL# 137: [VOLT199050 [HASTINGS230.00]] 0.70000
CHNL# 136: [VOLT199044 [PT.ACONI230.00]] 0.70000
CHNL# 135: [VOLT199000 [LINGAN 230.00]] 0.70000
TIME (SECONDS)
SUN, FEB 01 2009 21:37
230KV BUS VOLTS

2013 WINTER PEAK STORA MIN
NS-NB=0; NB-NE=500; CBX=732; ONI=961 ONS=851
FILE: ...\2013WP-NS-0-Results\b01-7012_1ph_88s723-2013WP-NS-0.out
CHNL# 217: [L6513NWV] -250.0
CHNL# 215: [L6503MVI] 0.0
CHNL# 197: [L8003MVI] 0.0
CHNL# 195: [L8004MVI] 0.0
CHNL# 193: [L8001MVI] -1000.
CHNL# 221: [L3001MVI] -1000.
TIME (SECONDS)
SUN, FEB 01 2009 21:37
LINE FLOW MW

2013 WINTER PEAK STORA MIN
NS-NB=0; NB-NE=500; CBX=732; ONI=961 ONS=851
FILE: ...\2013WP-NS-0-Results\b01-7012_1ph_88s723-2013WP-NS-0.out
CHNL# 154: [IR141-DIGBYH69.0 VOLTS] 0.70000
CHNL# 153: [IR137-STATIG25.0 VOLTS] 0.70000
CHNL# 152: [IR114-GLENDH138.0 VOLTS] 0.70000
CHNL# 151: [IR84-DALHOHV230.0 VOLTS] 0.70000
CHNL# 150: [IR82_NUTBHV69.0 VOLTS] 0.70000
CHNL# 149: [IR45_AMHERTP138.0 VOLTS] 0.70000
TIME (SECONDS)
SUN, FEB 01 2009 21:37
WIND BUS VOLTS

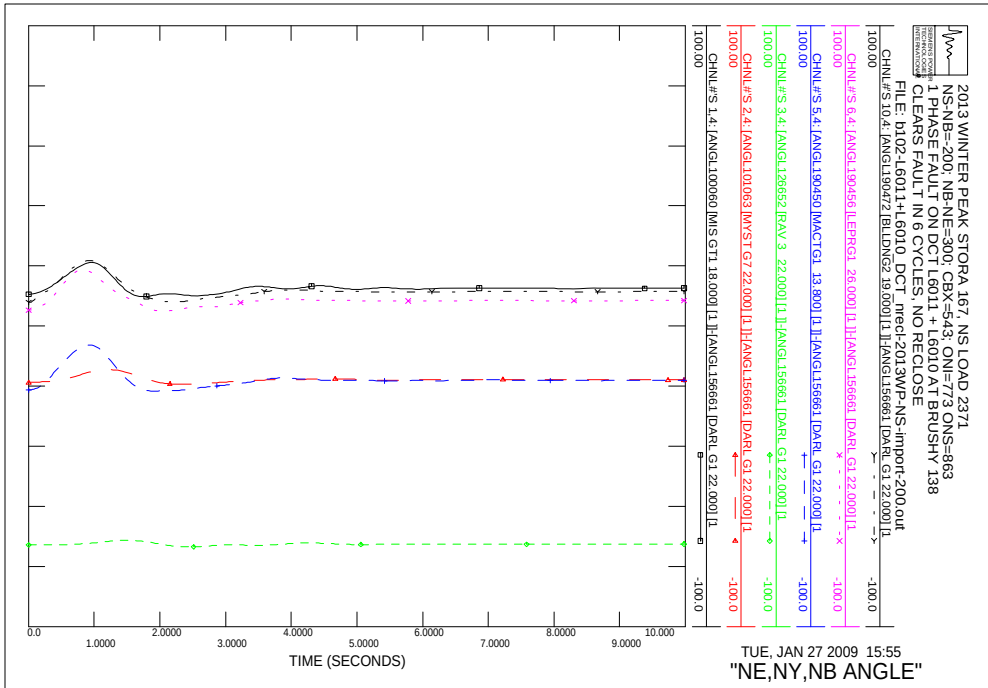
2013 WINTER PEAK STORA 167, NS LOAD 2371
NS-NB=-200; NB-NE=300; CBX=543; ONI=773 ONS=863
1 PHASE FAULT ON DCT L6011 + L6010 AT BRUSHY 138
CLEARS FAULT IN 6 CYCLES, NO RECLOSE
FILE: b102-L6011+L6010_DCT_nrecl-2013WP-NS-import-200.out
CHNL#S 10,4: [ANGL190472 [BLLDNG2 19.000] [1]]-[ANGL156661 [DARL G1 22.000] [1
CHNL#S 6,4: [ANGL190456 [LEPRG1 26.000] [1]]-[ANGL156661 [DARL G1 22.000] [1
CHNL#S 5,4: [ANGL190450 [MACTG1 13.800] [1]]-[ANGL156661 [DARL G1 22.000] [1
CHNL#S 3,4: [ANGL126652 [RAV 3 22.000] [1]]-[ANGL156661 [DARL G1 22.000] [1
CHNL#S 2,4: [ANGL101063 [MYST G7 22.000] [1]]-[ANGL156661 [DARL G1 22.000] [1
CHNL#S 1,4: [ANGL100060 [MIS GT1 18.000] [1]]-[ANGL156661 [DARL G1 22.000] [1
TIME (SECONDS)
TUE, JAN 27 2009 15:55
"NE,NY,NB ANGLE"

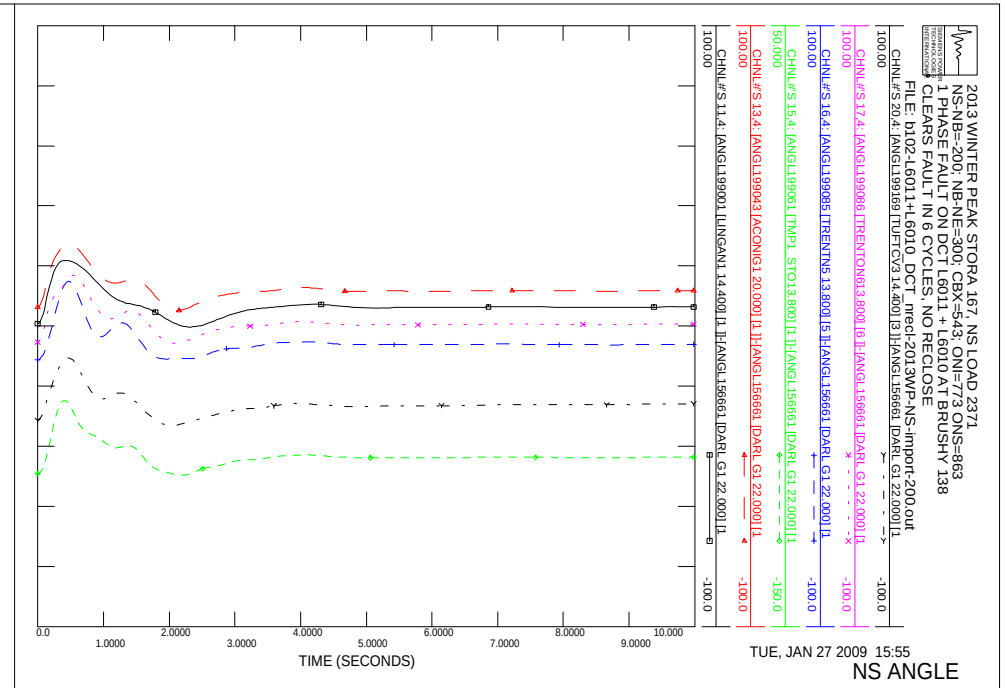
2013 WINTER PEAK STORA 167, NS LOAD 2371
NS-NB=-200; NB-NE=300; CBX=543; ONI=773 ONS=863
1 PHASE FAULT ON DCT L6011 + L6010 AT BRUSHY 138
CLEARS FAULT IN 6 CYCLES, NO RECLOSE
FILE: b102-L6011+L6010_DCT_nrecl-2013WP-NS-import-200.out
CHNL#S 20,4: [ANGL199169 [TUFTCV3 14.400] [3]]-[ANGL156661 [DARL G1 22.000] [1
CHNL#S 17,4: [ANGL199086 [TRENTON613.800] [6]]-[ANGL156661 [DARL G1 22.000] [1
CHNL#S 16,4: [ANGL199085 [TRENTN5 13.800] [5]]-[ANGL156661 [DARL G1 22.000] [1
CHNL#S 15,4: [ANGL199061 [TMP1 STO13.800] [1]]-[ANGL156661 [DARL G1 22.000] [1
CHNL#S 13,4: [ANGL199043 [ACONIG1 20.000] [1]]-[ANGL156661 [DARL G1 22.000] [1
CHNL#S 11,4: [ANGL199001 [LINGAN1 14.400] [1]]-[ANGL156661 [DARL G1 22.000] [1
TIME (SECONDS)
TUE, JAN 27 2009 15:55
NS ANGLE

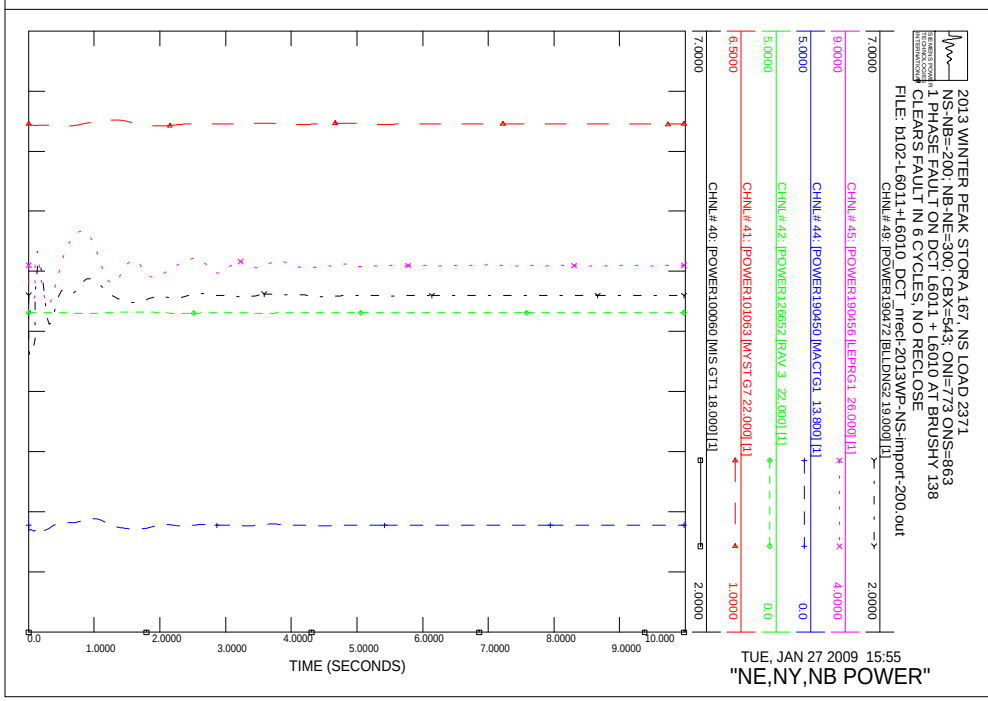
2013 WINTER PEAK STORA 167, NS LOAD 2371
NS-NB=-200; NB-NE=300; CBX=543; ONI=773 ONS=863
1 PHASE FAULT ON DCT L6011 + L6010 AT BRUSHY 138
CLEARS FAULT IN 6 CYCLES, NO RECLOSE
FILE: b102-L6011+L6010_DCT_nrecl-2013WP-NS-import-200.out
CHNL# 49: [POWER190472 [BLLDNG2 19.000] [1]
CHNL# 45: [POWER190456 [LEPRG1 26.000] [1]
CHNL# 44: [POWER190450 [MACTG1 13.800] [1]
CHNL# 42: [POWER126652 [RAV 3 22.000] [1]
CHNL# 41: [POWER101063 [MYST G7 22.000] [1]
CHNL# 40: [POWER100060 [MIS GT1 18.000] [1]
TIME (SECONDS)
TUE, JAN 27 2009 15:55
"NE,NY,NB POWER"

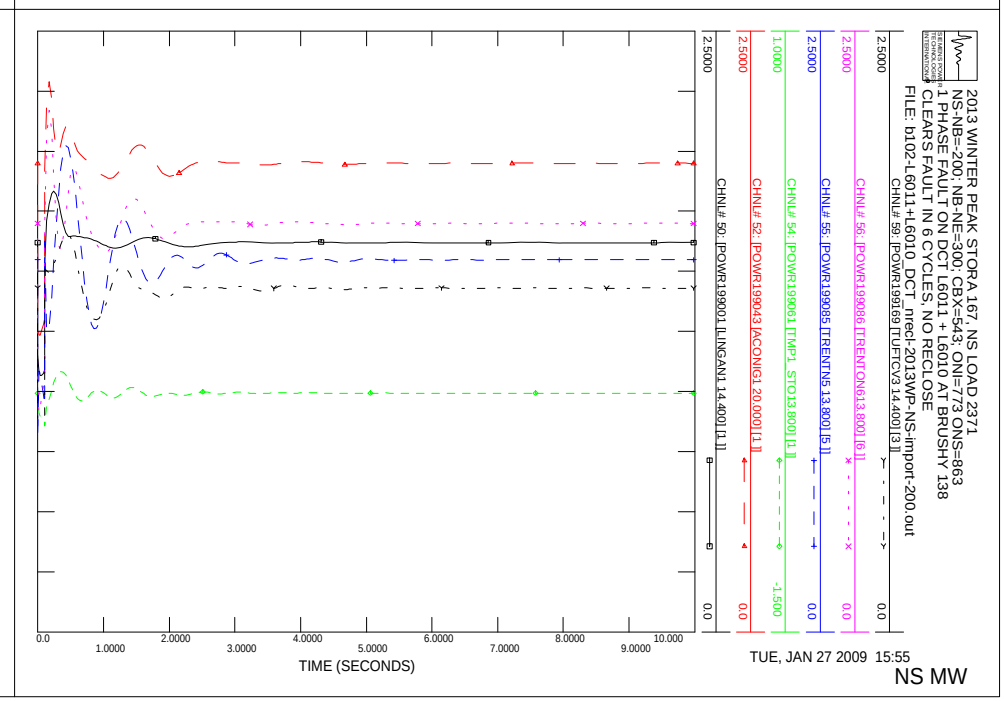
2013 WINTER PEAK STORA 167, NS LOAD 2371
NS-NB=-200; NB-NE=300; CBX=543; ONI=773 ONS=863
1 PHASE FAULT ON DCT L6011 + L6010 AT BRUSHY 138
CLEARS FAULT IN 6 CYCLES, NO RECLOSE
FILE: b102-L6011+L6010_DCT_nrecl-2013WP-NS-import-200.out
CHNL# 59: [POWR199169 [TUFTCV3 14.400] [3]]
CHNL# 56: [POWR199086 [TRENTON613.800] [6]]
CHNL# 55: [POWR199085 [TRENTN5 13.800] [5]]
CHNL# 54: [POWR199061 [TMP1 STO13.800] [1]]
CHNL# 52: [POWR199043 [ACONIG1 20.000] [1]]
CHNL# 50: [POWR199001 [LINGAN1 14.400] [1]]
TIME (SECONDS)
TUE, JAN 27 2009 15:55
NS MW

2013 WINTER PEAK STORA 167, NS LOAD 2371
NS-NB=-200; NB-NE=300; CBX=543; ONI=773 ONS=863
1 PHASE FAULT ON DCT L6011 + L6010 AT BRUSHY 138
CLEARS FAULT IN 6 CYCLES, NO RECLOSE
FILE: b102-L6011+L6010_DCT_nrect-2013WP-NS-import-200.out
CHNL# 119: [VARS IR141-DIGBY]
CHNL# 118: [VARS IR137-STATIA]
CHNL# 117: [VARS IR114-GLENDHU]
CHNL# 116: [VARS IR84-DALHOUSIE]
CHNL# 115: [VARS IR82_NUTTBY]
CHNL# 114: [VARS IR45_AMHERST]
TIME (SECONDS)
TUE, JAN 27 2009 15:55
NS WIND MV

2013 WINTER PEAK STORA 167, NS LOAD 2371
NS-NB=-200; NB-NE=300; CBX=543; ONI=773 ONS=863
1 PHASE FAULT ON DCT L6011 + L6010 AT BRUSHY 138
CLEARS FAULT IN 6 CYCLES, NO RECLOSE
FILE: b102-L6011+L6010_DCT_nrect-2013WP-NS-import-200.out
CHNL# 79: [POWER IR141-DIGBY]
CHNL# 78: [POWER IR137-STATIA]
CHNL# 77: [POWER IR114-GLENDHU]
CHNL# 76: [POWER IR84-DALHOUSIE]
CHNL# 75: [POWER IR82_NUTTBY]
CHNL# 74: [POWER IR45_AMHERST]
TIME (SECONDS)
TUE, JAN 27 2009 15:55
NS WIND MW

2013 WINTER PEAK STORA 167, NS LOAD 2371
NS-NB=-200; NB-NE=300; CBX=543; ONI=773 ONS=863
1 PHASE FAULT ON DCT L6011 + L6010 AT BRUSHY 138
CLEARS FAULT IN 6 CYCLES, NO RECLOSE
FILE: b102-L6011+L6010_DCT_nrect-2013WP-NS-import-200.out
CHNL# 133: [VOLT199125 [ONSLOW 345.00]]
CHNL# 132: [VOLT199120 [HOPEWELL 345.00]]
CHNL# 131: [VOLT199045 [WOODBINE345.00]]
CHNL# 130: [VOLT190320 [SALBRY 345.00]]
CHNL# 128: [VOLT190004 [KESWICK 345.00]]
CHNL# 127: [VOLT 70002 [ORRINGTN345.00]]
TIME (SECONDS)
TUE, JAN 27 2009 15:55
"345KV VOLTAGE"

2013 WINTER PEAK STORA 167, NS LOAD 2371
NS-NB=-200; NB-NE=300; CBX=543; ONI=773 ONS=863
1 PHASE FAULT ON DCT L6011 + L6010 AT BRUSHY 138
CLEARS FAULT IN 6 CYCLES, NO RECLOSE
FILE: b102-L6011+L6010_DCT_nrect-2013WP-NS-import-200.out
CHNL# 125: 60*(1+[FREQ199125 [ONSLOW 345.00]])
CHNL# 124: 60*(1+[FREQ199120 [HOPEWELL 345.00]])
CHNL# 123: 60*(1+[FREQ199045 [WOODBINE345.00]])
CHNL# 122: 60*(1+[FREQ190320 [SALBRY 345.00]])
CHNL# 121: 60*(1+[FREQ190197 [C.COVE 345.00]])
CHNL# 120: 60*(1+[FREQ 70002 [ORRINGTN345.00]])
TIME (SECONDS)
TUE, JAN 27 2009 15:55
FREQUENCY HZ

2013 WINTER PEAK STORA 167, NS LOAD 2371
NS-NB=-200; NB-NE=300; CBX=543; ONI=773 ONS=863
1 PHASE FAULT ON DCT L6011 + L6010 AT BRUSHY 138
CLEARS FAULT IN 6 CYCLES, NO RECLOSE
FILE: b102-L6011+L6010_DCT_mrect-2013WP-NS-import-200.out
CHNL# 146: [VOLT199280 [TUSKET A138.00]]
CHNL# 145: [VOLT199193 [HHWAS 138.00]]
CHNL# 144: [VOLT199165 [TUFTCOVE138.00]]
CHNL# 143: [VOLT199138: [SPRNGHILL138.00]]
CHNL# 142: [VOLT199090 [SON-TREN138.00]]
CHNL# 141: [VOLT199051 [HASTINGS138.00]]
1.2000
0.70000
0.0
1.0000
2.0000
3.0000
4.0000
5.0000
6.0000
7.0000
8.0000
9.0000
10.000
TIME (SECONDS)
TUE, JAN 27 2009 15:55
138KV BUS VOLTS

2013 WINTER PEAK STORA 167, NS LOAD 2371
NS-NB=-200; NB-NE=300; CBX=543; ONI=773 ONS=863
1 PHASE FAULT ON DCT L6011 + L6010 AT BRUSHY 138
CLEARS FAULT IN 6 CYCLES, NO RECLOSE
FILE: b102-L6011+L6010_DCT_mrect-2013WP-NS-import-200.out
CHNL# 140: [VOLT199240 [BWATER A230.00]]
CHNL# 139: [VOLT199200 [BRUSHY 230.00]]
CHNL# 138: [VOLT199130 [ONSLOW 230.00]]
CHNL# 137: [VOLT199050 [HASTINGS230.00]]
CHNL# 136: [VOLT199044 [PT.ACONI230.00]]
CHNL# 135: [VOLT199000 [LINGAN 230.00]]
1.2000
0.70000
0.0
1.0000
2.0000
3.0000
4.0000
5.0000
6.0000
7.0000
8.0000
9.0000
10.000
TIME (SECONDS)
TUE, JAN 27 2009 15:55
230KV BUS VOLTS

2013 WINTER PEAK STORA 167, NS LOAD 2371
NS-NB=-200; NB-NE=300; CBX=543; ONI=773 ONS=863
1 PHASE FAULT ON DCT L6011 + L6010 AT BRUSHY 138
CLEARS FAULT IN 6 CYCLES, NO RECLOSE
FILE: b102-L6011+L6010_DCT_mrect-2013WP-NS-import-200.out
CHNL# 217: [L6513MW]
CHNL# 215: [L6503MW]
CHNL# 197: [L8003MW]
CHNL# 195: [L8004MW]
CHNL# 193: [L8001MW]
CHNL# 221: [L3001MW]
250.00
500.00
1000.0
500.00
1000.0
-250.0
0.0
-1000.
0.0
1.0000
2.0000
3.0000
4.0000
5.0000
6.0000
7.0000
8.0000
9.0000
10.000
TIME (SECONDS)
TUE, JAN 27 2009 15:55
LINE FLOW MW

2013 WINTER PEAK STORA 167, NS LOAD 2371
NS-NB=-200; NB-NE=300; CBX=543; ONI=773 ONS=863
1 PHASE FAULT ON DCT L6011 + L6010 AT BRUSHY 138
CLEARS FAULT IN 6 CYCLES, NO RECLOSE
FILE: b102-L6011+L6010_DCT_mrect-2013WP-NS-import-200.out
CHNL# 154: [IR141-DIGBYH69.0 VOLTS]
CHNL# 153: [IR137-STATIG25.0 VOLTS]
CHNL# 152: [IR114-GLENDH138.0 VOLTS]
CHNL# 151: [IR84-DALHOHV230.0 VOLTS]
CHNL# 150: [IR82_NUTBHV69.0 VOLTS]
CHNL# 149: [IR45_AMHERTP138.0 VOLTS]
1.2000
0.70000
0.0
1.0000
2.0000
3.0000
4.0000
5.0000
6.0000
7.0000
8.0000
9.0000
10.000
TIME (SECONDS)
TUE, JAN 27 2009 15:55
WIND BUS VOLTS

2013 WINTER PEAK STORA 167, NS LOAD 2371
NS-NB=-200; NB-NE=300; CBX=543; ONI=773 ONS=863
1 PHASE FAULT L6005/L6016 AT 120H, CLEARED IN
6 CYCLES, NO RECLOSING
FILE: b103-L6005+L6016_DCT_nrecl-2013WP-NS-import-200.out
CHNL# 20: [ANGL199169 [TUFTCV3 14.400] [3]] [ANGL156661 [DARL G1 22.000] [1]
CHNL# 17: [ANGL199086 [TRENTON613.800] [6]] [ANGL156661 [DARL G1 22.000] [1]
CHNL# 16: [ANGL199085 [TRENTN5 13.800] [5]] [ANGL156661 [DARL G1 22.000] [1]
CHNL# 15: [ANGL199061 [TMP1 STO13.800] [1]] [ANGL156661 [DARL G1 22.000] [1]
CHNL# 13: [ANGL199043 [ACONIG1 20.000] [1]] [ANGL156661 [DARL G1 22.000] [1]
CHNL# 11: [ANGL199001 [LINGAN1 14.400] [1]] [ANGL156661 [DARL G1 22.000] [1]
100.00
-100.0
50.000
-150.0
0.0
1.0000
2.0000
3.0000
4.0000
5.0000
6.0000
7.0000
8.0000
9.0000
10.000
TIME (SECONDS)
TUE, JAN 27 2009 15:55
NS ANGLE

2013 WINTER PEAK STORA 167, NS LOAD 2371
NS-NB=-200; NB-NE=300; CBX=543; ONI=773 ONS=863
1 PHASE FAULT L6005/L6016 AT 120H, CLEARED IN
6 CYCLES, NO RECLOSING
FILE: b103-L6005+L6016_DCT_nrecl-2013WP-NS-import-200.out
CHNL# 10: [ANGL190472 [BLLDNG2 19.000] [1]] [ANGL156661 [DARL G1 22.000] [1]
CHNL# 6: [ANGL190456 [LEPRG1 26.000] [1]] [ANGL156661 [DARL G1 22.000] [1]
CHNL# 5: [ANGL190450 [MACTG1 13.800] [1]] [ANGL156661 [DARL G1 22.000] [1]
CHNL# 3: [ANGL126652 [RAV 3 22.000] [1]] [ANGL156661 [DARL G1 22.000] [1]
CHNL# 2: [ANGL101063 [MYST G7 22.000] [1]] [ANGL156661 [DARL G1 22.000] [1]
CHNL# 1: [ANGL100060 [MIS GT1 18.000] [1]] [ANGL156661 [DARL G1 22.000] [1]
100.00
-100.0
0.0
1.0000
2.0000
3.0000
4.0000
5.0000
6.0000
7.0000
8.0000
9.0000
10.000
TIME (SECONDS)
TUE, JAN 27 2009 15:55
"NE,NY,NB ANGLE"

2013 WINTER PEAK STORA 167, NS LOAD 2371
NS-NB=-200; NB-NE=300; CBX=543; ONI=773 ONS=863
1 PHASE FAULT L6005/L6016 AT 120H, CLEARED IN
6 CYCLES, NO RECLOSING
FILE: b103-L6005+L6016_DCT_nrecl-2013WP-NS-import-200.out
CHNL# 59: [POWR199169 [TUFTCV3 14.400] [3]]
CHNL# 56: [POWR199086 [TRENTON613.800] [6]]
CHNL# 55: [POWR199085 [TRENTN5 13.800] [5]]
CHNL# 54: [POWR199061 [TMP1 STO13.800] [1]]
CHNL# 52: [POWR199043 [ACONIG1 20.000] [1]]
CHNL# 50: [POWR199001 [LINGAN1 14.400] [1]]
2.5000
0.0
1.0000
-1.500
0.0
1.0000
2.0000
3.0000
4.0000
5.0000
6.0000
7.0000
8.0000
9.0000
10.000
TIME (SECONDS)
TUE, JAN 27 2009 15:55
NS MW

2013 WINTER PEAK STORA 167, NS LOAD 2371
NS-NB=-200; NB-NE=300; CBX=543; ONI=773 ONS=863
1 PHASE FAULT L6005/L6016 AT 120H, CLEARED IN
6 CYCLES, NO RECLOSING
FILE: b103-L6005+L6016_DCT_nrecl-2013WP-NS-import-200.out
CHNL# 49: [POWER190472 [BLLDNG2 19.000] [1]]
CHNL# 45: [POWER190456 [LEPRG1 26.000] [1]]
CHNL# 44: [POWER190450 [MACTG1 13.800] [1]]
CHNL# 42: [POWER126652 [RAV 3 22.000] [1]]
CHNL# 41: [POWER101063 [MYST G7 22.000] [1]]
CHNL# 40: [POWER100060 [MIS GT1 18.000] [1]]
7.0000
2.0000
9.0000
4.0000
5.0000
0.0
5.0000
0.0
6.5000
1.0000
0.0
1.0000
2.0000
3.0000
4.0000
5.0000
6.0000
7.0000
8.0000
9.0000
10.000
TIME (SECONDS)
TUE, JAN 27 2009 15:55
"NE,NY,NB POWER"

2013 WINTER PEAK STORA 167, NS LOAD 2371
NS-NB=-200; NB-NE=300; CBX=543; ONI=773 ONS=863
1 PHASE FAULT L6005/L6016 AT 120H, CLEARED IN
6 CYCLES, NO RECLOSING
FILE: b103-L6005+L6016_DCT_nrecl-2013WP-NS-import-200.out
CHNL# 119: [VARS IR141-DIGBY]
CHNL# 118: [VARS IR137-STATIA]
CHNL# 117: [VARS IR114-GLENDHU]
CHNL# 116: [VARS IR84-DALHOUSIE]
CHNL# 115: [VARS IR82_NUTTBY]
CHNL# 114: [VARS IR45_AMHERST]
TIME (SECONDS)
TUE, JAN 27 2009 15:55
NS WIND MV

2013 WINTER PEAK STORA 167, NS LOAD 2371
NS-NB=-200; NB-NE=300; CBX=543; ONI=773 ONS=863
1 PHASE FAULT L6005/L6016 AT 120H, CLEARED IN
6 CYCLES, NO RECLOSING
FILE: b103-L6005+L6016_DCT_nrecl-2013WP-NS-import-200.out
CHNL# 79: [POWER IR141-DIGBY]
CHNL# 78: [POWER IR137-STATIA]
CHNL# 77: [POWER IR114-GLENDHU]
CHNL# 76: [POWER IR84-DALHOUSIE]
CHNL# 75: [POWER IR82_NUTTBY]
CHNL# 74: [POWER IR45_AMHERST]
TIME (SECONDS)
TUE, JAN 27 2009 15:55
NS WIND MW

2013 WINTER PEAK STORA 167, NS LOAD 2371
NS-NB=-200; NB-NE=300; CBX=543; ONI=773 ONS=863
1 PHASE FAULT L6005/L6016 AT 120H, CLEARED IN
6 CYCLES, NO RECLOSING
FILE: b103-L6005+L6016_DCT_nrecl-2013WP-NS-import-200.out
CHNL# 133: [VOLT199125 IONSLOW 345.00]
CHNL# 132: [VOLT199120 [HOPEWELL 345.00]
CHNL# 131: [VOLT199045 [WOODBINE345.00]
CHNL# 130: [VOLT190320 [SALBRY 345.00]
CHNL# 128: [VOLT190004 [KESWICK 345.00]
CHNL# 127: [VOLT 70002 [ORRINGTN345.00]
TIME (SECONDS)
TUE, JAN 27 2009 15:55
"345KV VOLTAGE"

2013 WINTER PEAK STORA 167, NS LOAD 2371
NS-NB=-200; NB-NE=300; CBX=543; ONI=773 ONS=863
1 PHASE FAULT L6005/L6016 AT 120H, CLEARED IN
6 CYCLES, NO RECLOSING
FILE: b103-L6005+L6016_DCT_nrecl-2013WP-NS-import-200.out
CHNL# 125: 60*(1+[FREQ199125 [ONSLOW 345.00])
CHNL# 124: 60*(1+[FREQ199120 [HOPEWELL 345.00])
CHNL# 123: 60*(1+[FREQ199045 [WOODBINE345.00])
CHNL# 122: 60*(1+[FREQ190320 [SALBRY 345.00])
CHNL# 121: 60*(1+[FREQ190197 [C.COVE 345.00])
CHNL# 120: 60*(1+[FREQ 70002 [ORRINGTN345.00])
TIME (SECONDS)
TUE, JAN 27 2009 15:55
FREQUENCY HZ

2013 WINTER PEAK STORA 167, NS LOAD 2371
NS-NB=-200; NB-NE=300; CBX=543; ONI=773 ONS=863
1 PHASE FAULT L6005/L6016 AT 120H, CLEARED IN
6 CYCLES, NO RECLOSING
FILE: b103-L6005+L6016_DCT_nrect-2013WP-NS-import-200.out
CHNL# 146: [VOLT199280 [TUSKET A138.00]]
CHNL# 145: [VOLT199193 [HHWAS 138.00]]
CHNL# 144: [VOLT199165 [TUFTCOVE138.00]]
CHNL# 143: [VOLT199138 [SPRNGHILL138.00]]
CHNL# 142: [VOLT199090 [SON-TREN138.00]]
CHNL# 141: [VOLT199051 [HASTINGS138.00]]
TIME (SECONDS)
TUE, JAN 27 2009 15:55
138KV BUS VOLTS

2013 WINTER PEAK STORA 167, NS LOAD 2371
NS-NB=-200; NB-NE=300; CBX=543; ONI=773 ONS=863
1 PHASE FAULT L6005/L6016 AT 120H, CLEARED IN
6 CYCLES, NO RECLOSING
FILE: b103-L6005+L6016_DCT_nrect-2013WP-NS-import-200.out
CHNL# 140: [VOLT199240 [BWATER A230.00]]
CHNL# 139: [VOLT199200 [BRUSHY 230.00]]
CHNL# 138: [VOLT199130 [ONSLOW 230.00]]
CHNL# 137: [VOLT199050 [HASTINGS230.00]]
CHNL# 136: [VOLT199044 [PT.ACONI230.00]]
CHNL# 135: [VOLT199000 [LINGAN 230.00]]
TIME (SECONDS)
TUE, JAN 27 2009 15:55
230KV BUS VOLTS

2013 WINTER PEAK STORA 167, NS LOAD 2371
NS-NB=-200; NB-NE=300; CBX=543; ONI=773 ONS=863
1 PHASE FAULT L6005/L6016 AT 120H, CLEARED IN
6 CYCLES, NO RECLOSING
FILE: b103-L6005+L6016_DCT_nrect-2013WP-NS-import-200.out
CHNL# 217: [L6533MW]
CHNL# 215: [L6503MW]
CHNL# 197: [L8003MW]
CHNL# 195: [L8004MW]
CHNL# 193: [L8001MW]
CHNL# 221: [L3001MW]
TIME (SECONDS)
TUE, JAN 27 2009 15:55
LINE FLOW MW

2013 WINTER PEAK STORA 167, NS LOAD 2371
NS-NB=-200; NB-NE=300; CBX=543; ONI=773 ONS=863
1 PHASE FAULT L6005/L6016 AT 120H, CLEARED IN
6 CYCLES, NO RECLOSING
FILE: b103-L6005+L6016_DCT_nrect-2013WP-NS-import-200.out
CHNL# 154: [IR141-DIGBYH69.0 VOLTS]
CHNL# 153: [IR137-STATIG25.0 VOLTS]
CHNL# 152: [IR114-GLENDH138.0 VOLTS]
CHNL# 151: [IR84-DALHOHV230.0 VOLTS]
CHNL# 150: [IR82_NUTBHV69.0 VOLTS]
CHNL# 149: [IR45_AMHERTP138.0 VOLTS]
TIME (SECONDS)
TUE, JAN 27 2009 15:55
WIND BUS VOLTS

2013 WINTER PEAK STORA 167, NS LOAD 2371
NS-NB=-200; NB-NE=300; CBX=543; ONI=773 ONS=863
1 PHASE FAULT L6003/L6009 AT 90H, CLEARED IN
6 CYCLES, NO RECLOSING
FILE: b104-L6003+L6009_DCT_nrecl-2013WP-NS-import-200.out
CHNL# 20: [ANGL199169 [TUFTCV3 14.400] [3]] [ANGL156661 [DARL G1 22.000] [1]
CHNL# 17: [ANGL199086 [TRENTON613.800] [6]] [ANGL156661 [DARL G1 22.000] [1]
CHNL# 16: [ANGL199085 [TRENTN5 13.800] [5]] [ANGL156661 [DARL G1 22.000] [1]
CHNL# 15: [ANGL199061 [TMP1 STO13.800] [1]] [ANGL156661 [DARL G1 22.000] [1]
CHNL# 13: [ANGL199043 [ACONIG1 20.000] [1]] [ANGL156661 [DARL G1 22.000] [1]
CHNL# 11: [ANGL199001 [LINGAN1 14.400] [1]] [ANGL156661 [DARL G1 22.000] [1]
TIME (SECONDS)
TUE, JAN 27 2009 15:55
NS ANGLE

2013 WINTER PEAK STORA 167, NS LOAD 2371
NS-NB=-200; NB-NE=300; CBX=543; ONI=773 ONS=863
1 PHASE FAULT L6003/L6009 AT 90H, CLEARED IN
6 CYCLES, NO RECLOSING
FILE: b104-L6003+L6009_DCT_nrecl-2013WP-NS-import-200.out
CHNL# 10: [ANGL190472 [BLLDNG2 19.000] [1]] [ANGL156661 [DARL G1 22.000] [1]
CHNL# 6: [ANGL190456 [LEPRG1 26.000] [1]] [ANGL156661 [DARL G1 22.000] [1]
CHNL# 5: [ANGL190450 [MACTG1 13.800] [1]] [ANGL156661 [DARL G1 22.000] [1]
CHNL# 3: [ANGL126652 [RAV 3 22.000] [1]] [ANGL156661 [DARL G1 22.000] [1]
CHNL# 2: [ANGL101063 [MYST G7 22.000] [1]] [ANGL156661 [DARL G1 22.000] [1]
CHNL# 1: [ANGL100060 [MIS GT1 18.000] [1]] [ANGL156661 [DARL G1 22.000] [1]
TIME (SECONDS)
TUE, JAN 27 2009 15:55
"NE,NY,NB ANGLE"

2013 WINTER PEAK STORA 167, NS LOAD 2371
NS-NB=-200; NB-NE=300; CBX=543; ONI=773 ONS=863
1 PHASE FAULT L6003/L6009 AT 90H, CLEARED IN
6 CYCLES, NO RECLOSING
FILE: b104-L6003+L6009_DCT_nrecl-2013WP-NS-import-200.out
CHNL# 59: [POWR199169 [TUFTCV3 14.400] [3]]
CHNL# 56: [POWR199086 [TRENTON613.800] [6]]
CHNL# 55: [POWR199085 [TRENTN5 13.800] [5]]
CHNL# 54: [POWR199061 [TMP1 STO13.800] [1]]
CHNL# 52: [POWR199043 [ACONIG1 20.000] [1]]
CHNL# 50: [POWR199001 [LINGAN1 14.400] [1]]
TIME (SECONDS)
TUE, JAN 27 2009 15:55
NS MW

2013 WINTER PEAK STORA 167, NS LOAD 2371
NS-NB=-200; NB-NE=300; CBX=543; ONI=773 ONS=863
1 PHASE FAULT L6003/L6009 AT 90H, CLEARED IN
6 CYCLES, NO RECLOSING
FILE: b104-L6003+L6009_DCT_nrecl-2013WP-NS-import-200.out
CHNL# 49: [POWER190472 [BLLDNG2 19.000] [1]]
CHNL# 45: [POWER190456 [LEPRG1 26.000] [1]]
CHNL# 44: [POWER190450 [MACTG1 13.800] [1]]
CHNL# 42: [POWER126652 [RAV 3 22.000] [1]]
CHNL# 41: [POWER101063 [MYST G7 22.000] [1]]
CHNL# 40: [POWER100060 [MIS GT1 18.000] [1]]
TIME (SECONDS)
TUE, JAN 27 2009 15:55
"NE,NY,NB POWER"

2013 WINTER PEAK STORA 167, NS LOAD 2371
NS-NB=-200; NB-NE=300; CBX=543; ONI=773 ONS=863
1 PHASE FAULT L6003/L6009 AT 90H, CLEARED IN
6 CYCLES, NO RECLOSING
FILE: b104-L6003+L6009_DCT_nrecl-2013WP-NS-import-200.out
CHNL# 119: [VARS IR141-DIGBY]
CHNL# 118: [VARS IR137-STATIA]
CHNL# 117: [VARS IR114-GLENDHU]
CHNL# 116: [VARS IR84-DALHOUSIE]
CHNL# 115: [VARS IR82_NUTTBY]
CHNL# 114: [VARS IR45_AMHERST]
TIME (SECONDS)
TUE, JAN 27 2009 15:55
NS WIND MV

2013 WINTER PEAK STORA 167, NS LOAD 2371
NS-NB=-200; NB-NE=300; CBX=543; ONI=773 ONS=863
1 PHASE FAULT L6003/L6009 AT 90H, CLEARED IN
6 CYCLES, NO RECLOSING
FILE: b104-L6003+L6009_DCT_nrecl-2013WP-NS-import-200.out
CHNL# 79: [POWER IR141-DIGBY]
CHNL# 78: [POWER IR137-STATIA]
CHNL# 77: [POWER IR114-GLENDHU]
CHNL# 76: [POWER IR84-DALHOUSIE]
CHNL# 75: [POWER IR82_NUTTBY]
CHNL# 74: [POWER IR45_AMHERST]
TIME (SECONDS)
TUE, JAN 27 2009 15:55
NS WIND MW

2013 WINTER PEAK STORA 167, NS LOAD 2371
NS-NB=-200; NB-NE=300; CBX=543; ONI=773 ONS=863
1 PHASE FAULT L6003/L6009 AT 90H, CLEARED IN
6 CYCLES, NO RECLOSING
FILE: b104-L6003+L6009_DCT_nrecl-2013WP-NS-import-200.out
CHNL# 133: [VOLT199125 [ONSLOW 345.00]]
CHNL# 132: [VOLT199120 [HOPEWELL 345.00]]
CHNL# 131: [VOLT199045 [WOODBINE345.00]]
CHNL# 130: [VOLT190320 [SALBRY 345.00]]
CHNL# 128: [VOLT190004 [KESWICK 345.00]]
CHNL# 127: [VOLT 70002 [ORRINGTN345.00]]
TIME (SECONDS)
TUE, JAN 27 2009 15:55
"345KV VOLTAGE"

2013 WINTER PEAK STORA 167, NS LOAD 2371
NS-NB=-200; NB-NE=300; CBX=543; ONI=773 ONS=863
1 PHASE FAULT L6003/L6009 AT 90H, CLEARED IN
6 CYCLES, NO RECLOSING
FILE: b104-L6003+L6009_DCT_nrecl-2013WP-NS-import-200.out
CHNL# 125: 60*(1+[FREQ199125 [ONSLOW 345.00]])
CHNL# 124: 60*(1+[FREQ199120 [HOPEWELL 345.00]])
CHNL# 123: 60*(1+[FREQ199045 [WOODBINE345.00]])
CHNL# 122: 60*(1+[FREQ190320 [SALBRY 345.00]])
CHNL# 121: 60*(1+[FREQ190197 [C.COVE 345.00]])
CHNL# 120: 60*(1+[FREQ 70002 [ORRINGTN345.00]])
TIME (SECONDS)
TUE, JAN 27 2009 15:55
FREQUENCY HZ

2013 WINTER PEAK STORA 167, NS LOAD 2371
NS-NB=-200; NB-NE=300; CBX=543; ONI=773 ONS=863
1 PHASE FAULT L6003/L6009 AT 90H, CLEARED IN
6 CYCLES, NO RECLOSING
FILE: b104-L6003+L6009_DCT_nrect-2013WP-NS-import-200.out
CHNL# 146: [VOLT199280 [TUSKET A138.00]]
CHNL# 145: [VOLT199193 [HHWAS 138.00]]
CHNL# 144: [VOLT199165 [TUFTCOVE138.00]]
CHNL# 143: [VOLT199138: [SPRNGHILL138.00]]
CHNL# 142: [VOLT199090 [SON-TREN138.00]]
CHNL# 141: [VOLT199051 [HASTINGS138.00]]
1.2000
0.70000
0.0
1.0000
2.0000
3.0000
4.0000
5.0000
6.0000
7.0000
8.0000
9.0000
10.000
TIME (SECONDS)
TUE, JAN 27 2009 15:55
138KV BUS VOLTS

2013 WINTER PEAK STORA 167, NS LOAD 2371
NS-NB=-200; NB-NE=300; CBX=543; ONI=773 ONS=863
1 PHASE FAULT L6003/L6009 AT 90H, CLEARED IN
6 CYCLES, NO RECLOSING
FILE: b104-L6003+L6009_DCT_nrect-2013WP-NS-import-200.out
CHNL# 140: [VOLT199240 [BWATER A230.00]]
CHNL# 139: [VOLT199200 [BRUSHY 230.00]]
CHNL# 138: [VOLT199130 [ONSLOW 230.00]]
CHNL# 137: [VOLT199050 [HASTINGS230.00]]
CHNL# 136: [VOLT199044 [PT.ACONI230.00]]
CHNL# 135: [VOLT199000 [LINGAN 230.00]]
1.2000
0.70000
0.0
1.0000
2.0000
3.0000
4.0000
5.0000
6.0000
7.0000
8.0000
9.0000
10.000
TIME (SECONDS)
TUE, JAN 27 2009 15:55
230KV BUS VOLTS

2013 WINTER PEAK STORA 167, NS LOAD 2371
NS-NB=-200; NB-NE=300; CBX=543; ONI=773 ONS=863
1 PHASE FAULT L6003/L6009 AT 90H, CLEARED IN
6 CYCLES, NO RECLOSING
FILE: b104-L6003+L6009_DCT_nrect-2013WP-NS-import-200.out
CHNL# 217: [L6533MW]
CHNL# 215: [L6503MW]
CHNL# 197: [L8003MW]
CHNL# 195: [L8004MW]
CHNL# 193: [L8001MW]
CHNL# 221: [L3001MW]
250.00
500.00
1000.0
0.0
-250.0
-1000.
0.0
1.0000
2.0000
3.0000
4.0000
5.0000
6.0000
7.0000
8.0000
9.0000
10.000
TIME (SECONDS)
TUE, JAN 27 2009 15:55
LINE FLOW MW

2013 WINTER PEAK STORA 167, NS LOAD 2371
NS-NB=-200; NB-NE=300; CBX=543; ONI=773 ONS=863
1 PHASE FAULT L6003/L6009 AT 90H, CLEARED IN
6 CYCLES, NO RECLOSING
FILE: b104-L6003+L6009_DCT_nrect-2013WP-NS-import-200.out
CHNL# 154: [IR141-DIGBYH69.0 VOLTS]
CHNL# 153: [IR137-STATIG25.0 VOLTS]
CHNL# 152: [IR114-GLENDH138.0 VOLTS]
CHNL# 151: [IR84-DALHOHV230.0 VOLTS]
CHNL# 150: [IR82 NUTBHV69.0 VOLTS]
CHNL# 149: [IR45 AMHERTP138.0 VOLTS]
1.2000
0.70000
0.0
1.0000
2.0000
3.0000
4.0000
5.0000
6.0000
7.0000
8.0000
9.0000
10.000
TIME (SECONDS)
TUE, JAN 27 2009 15:55
WIND BUS VOLTS

2013 WINTER PEAK STORA 167, NS LOAD 2371
NS-NB=-200; NB-NE=300; CBX=543; ONI=773 ONS=863
1 PHASE FAULT L6003/L6007 AT 91H, CLEARED IN 6 CY
FAULT IMPEDANCE WITH ALL GENERATION ON
FILE: b105a-L6003+L6007_DCT_nrecl-2013WP-NS-import-200.out
CHNL#S 20:4 [ANGL199169 [TUFTCV3 14.400] [3]] [ANGL156661 [DARL G1 22.000] [1]
CHNL#S 17:4 [ANGL199086 [TRENTON613.800] [6]] [ANGL156661 [DARL G1 22.000] [1]
CHNL#S 16:4 [ANGL199085 [TRENTN5 13.800] [5]] [ANGL156661 [DARL G1 22.000] [1]
CHNL#S 15:4 [ANGL199061 [TMP1 STO13.800] [1]] [ANGL156661 [DARL G1 22.000] [1]
CHNL#S 13:4 [ANGL199043 [ACONIG1 20.000] [1]] [ANGL156661 [DARL G1 22.000] [1]
CHNL#S 11:4 [ANGL199001 [LINGAN1 14.400] [1]] [ANGL156661 [DARL G1 22.000] [1]
100.00
-100.0
0.0
1.0000
2.0000
3.0000
4.0000
5.0000
6.0000
7.0000
8.0000
9.0000
10.000
TIME (SECONDS)
TUE, JAN 27 2009 15:55
NS ANGLE

2013 WINTER PEAK STORA 167, NS LOAD 2371
NS-NB=-200; NB-NE=300; CBX=543; ONI=773 ONS=863
1 PHASE FAULT L6003/L6007 AT 91H, CLEARED IN 6 CY
FAULT IMPEDANCE WITH ALL GENERATION ON
FILE: b105a-L6003+L6007_DCT_nrecl-2013WP-NS-import-200.out
CHNL#S 10:4 [ANGL190472 [BLLDNG2 19.000] [1]] [ANGL156661 [DARL G1 22.000] [1]
CHNL#S 6:4 [ANGL190456 [LEPRG1 26.000] [1]] [ANGL156661 [DARL G1 22.000] [1]
CHNL#S 5:4 [ANGL190450 [MACTG1 13.800] [1]] [ANGL156661 [DARL G1 22.000] [1]
CHNL#S 3:4 [ANGL126652 [RAV 3 22.000] [1]] [ANGL156661 [DARL G1 22.000] [1]
CHNL#S 2:4 [ANGL101063 [MYST G7 22.000] [1]] [ANGL156661 [DARL G1 22.000] [1]
CHNL#S 1:4 [ANGL100060 [MIS GT1 18.000] [1]] [ANGL156661 [DARL G1 22.000] [1]
100.00
-100.0
0.0
1.0000
2.0000
3.0000
4.0000
5.0000
6.0000
7.0000
8.0000
9.0000
10.000
TIME (SECONDS)
TUE, JAN 27 2009 15:55
"NE,NY,NB ANGLE"

2013 WINTER PEAK STORA 167, NS LOAD 2371
NS-NB=-200; NB-NE=300; CBX=543; ONI=773 ONS=863
1 PHASE FAULT L6003/L6007 AT 91H, CLEARED IN 6 CY
FAULT IMPEDANCE WITH ALL GENERATION ON
FILE: b105a-L6003+L6007_DCT_nrecl-2013WP-NS-import-200.out
CHNL# 59: [POWR199169 [TUFTCV3 14.400] [3]]
CHNL# 56: [POWR199086 [TRENTON613.800] [6]]
CHNL# 55: [POWR199085 [TRENTN5 13.800] [5]]
CHNL# 54: [POWR199061 [TMP1 STO13.800] [1]]
CHNL# 52: [POWR199043 [ACONIG1 20.000] [1]]
CHNL# 50: [POWR199001 [LINGAN1 14.400] [1]]
2.5000
0.0
-1.500
1.0000
0.0
TIME (SECONDS)
TUE, JAN 27 2009 15:55
NS MW

2013 WINTER PEAK STORA 167, NS LOAD 2371
NS-NB=-200; NB-NE=300; CBX=543; ONI=773 ONS=863
1 PHASE FAULT L6003/L6007 AT 91H, CLEARED IN 6 CY
FAULT IMPEDANCE WITH ALL GENERATION ON
FILE: b105a-L6003+L6007_DCT_nrecl-2013WP-NS-import-200.out
CHNL# 49: [POWER190472 [BLLDNG2 19.000] [1]]
CHNL# 45: [POWER190456 [LEPRG1 26.000] [1]]
CHNL# 44: [POWER190450 [MACTG1 13.800] [1]]
CHNL# 42: [POWER126652 [RAV 3 22.000] [1]]
CHNL# 41: [POWER101063 [MYST G7 22.000] [1]]
CHNL# 40: [POWER100060 [MIS GT1 18.000] [1]]
7.0000
2.0000
4.0000
0.0
1.0000
6.5000
TIME (SECONDS)
TUE, JAN 27 2009 15:55
"NE,NY,NB POWER"

2013 WINTER PEAK STORA 167, NS LOAD 2371
NS-NB=-200; NB-NE=300; CBX=543; ONI=773 ONS=863
1 PHASE FAULT L6003/L6007 AT 91H, CLEARED IN 6 CY
FAULT IMPEDANCE WITH ALL GENERATION ON
FILE: b105a-L6003+L6007_DCT_nrecl-2013WP-NS-import-200.out
CHNL# 119: [VARS IR141-DIGBY]
CHNL# 118: [VARS IR137-STATIA]
CHNL# 117: [VARS IR114-GLENDHU]
CHNL# 116: [VARS IR84-DALHOUSIE]
CHNL# 115: [VARS IR82_NUTTBY]
CHNL# 114: [VARS IR45_AMHERST]
TIME (SECONDS)
TUE, JAN 27 2009 15:55
NS WIND MV

2013 WINTER PEAK STORA 167, NS LOAD 2371
NS-NB=-200; NB-NE=300; CBX=543; ONI=773 ONS=863
1 PHASE FAULT L6003/L6007 AT 91H, CLEARED IN 6 CY
FAULT IMPEDANCE WITH ALL GENERATION ON
FILE: b105a-L6003+L6007_DCT_nrecl-2013WP-NS-import-200.out
CHNL# 79: [POWER IR141-DIGBY]
CHNL# 78: [POWER IR137-STATIA]
CHNL# 77: [POWER IR114-GLENDHU]
CHNL# 76: [POWER IR84-DALHOUSIE]
CHNL# 75: [POWER IR82_NUTTBY]
CHNL# 74: [POWER IR45_AMHERST]
TIME (SECONDS)
TUE, JAN 27 2009 15:55
NS WIND MW

2013 WINTER PEAK STORA 167, NS LOAD 2371
NS-NB=-200; NB-NE=300; CBX=543; ONI=773 ONS=863
1 PHASE FAULT L6003/L6007 AT 91H, CLEARED IN 6 CY
FAULT IMPEDANCE WITH ALL GENERATION ON
FILE: b105a-L6003+L6007_DCT_nrecl-2013WP-NS-import-200.out
CHNL# 133: [VOLT199125 [ONSLOW 345.00]]
CHNL# 132: [VOLT199120 [HOPEWELL 345.00]]
CHNL# 131: [VOLT199045 [WOODBINE345.00]]
CHNL# 130: [VOLT190320 [SALBRY 345.00]]
CHNL# 128: [VOLT190004 [KESWICK 345.00]]
CHNL# 127: [VOLT 70002 [ORRINGTN345.00]]
TIME (SECONDS)
TUE, JAN 27 2009 15:55
"345KV VOLTAGE"

2013 WINTER PEAK STORA 167, NS LOAD 2371
NS-NB=-200; NB-NE=300; CBX=543; ONI=773 ONS=863
1 PHASE FAULT L6003/L6007 AT 91H, CLEARED IN 6 CY
FAULT IMPEDANCE WITH ALL GENERATION ON
FILE: b105a-L6003+L6007_DCT_nrecl-2013WP-NS-import-200.out
CHNL# 125: 60*(1+[FREQ199125 [ONSLOW 345.00]])
CHNL# 124: 60*(1+[FREQ199120 [HOPEWELL 345.00]])
CHNL# 123: 60*(1+[FREQ199045 [WOODBINE345.00]])
CHNL# 122: 60*(1+[FREQ190320 [SALBRY 345.00]])
CHNL# 121: 60*(1+[FREQ190197 [C.COVE 345.00]])
CHNL# 120: 60*(1+[FREQ 70002 [ORRINGTN345.00]])
TIME (SECONDS)
TUE, JAN 27 2009 15:55
FREQUENCY HZ

2013 WINTER PEAK STORA 167, NS LOAD 2371
NS-NB=-200; NB-NE=300; CBX=543; ONI=773 ONS=863
1 PHASE FAULT L6003/L6007 AT 91H, CLEARED IN 6 CY
FAULT IMPEDANCE WITH ALL GENERATION ON
FILE: b105a-L6003+L6007_DCT_nrecl-2013WP-NS-import-200.out
CHNL# 146: [VOLT199280 [TUSKET A138.00]]
CHNL# 145: [VOLT199193 [HWAS 138.00]]
CHNL# 144: [VOLT199165 [TUFTCOVE138.00]]
CHNL# 143: [VOLT199138 [SPRNGHLL138.00]]
CHNL# 142: [VOLT199090 [SON-TREN138.00]]
CHNL# 141: [VOLT199051 [HASTINGS138.00]]
TIME (SECONDS)
TUE, JAN 27 2009 15:55
138KV BUS VOLTS

2013 WINTER PEAK STORA 167, NS LOAD 2371
NS-NB=-200; NB-NE=300; CBX=543; ONI=773 ONS=863
1 PHASE FAULT L6003/L6007 AT 91H, CLEARED IN 6 CY
FAULT IMPEDANCE WITH ALL GENERATION ON
FILE: b105a-L6003+L6007_DCT_nrecl-2013WP-NS-import-200.out
CHNL# 140: [VOLT199240 [BWATER A230.00]]
CHNL# 139: [VOLT199200 [BRUSHY 230.00]]
CHNL# 138: [VOLT199130 [ONSLOW 230.00]]
CHNL# 137: [VOLT199050 [HASTINGS230.00]]
CHNL# 136: [VOLT199044 [PT.ACONI230.00]]
CHNL# 135: [VOLT199000 [LINGAN 230.00]]
TIME (SECONDS)
TUE, JAN 27 2009 15:55
230KV BUS VOLTS

2013 WINTER PEAK STORA 167, NS LOAD 2371
NS-NB=-200; NB-NE=300; CBX=543; ONI=773 ONS=863
1 PHASE FAULT L6003/L6007 AT 91H, CLEARED IN 6 CY
FAULT IMPEDANCE WITH ALL GENERATION ON
FILE: b105a-L6003+L6007_DCT_nrecl-2013WP-NS-import-200.out
CHNL# 217: [L6533MW]
CHNL# 215: [L6503MVI]
CHNL# 197: [L8003MVI]
CHNL# 195: [L8004MVI]
CHNL# 193: [L8001MVI]
CHNL# 221: [L3001MVI]
TIME (SECONDS)
TUE, JAN 27 2009 15:55
LINE FLOW MW

2013 WINTER PEAK STORA 167, NS LOAD 2371
NS-NB=-200; NB-NE=300; CBX=543; ONI=773 ONS=863
1 PHASE FAULT L6003/L6007 AT 91H, CLEARED IN 6 CY
FAULT IMPEDANCE WITH ALL GENERATION ON
FILE: b105a-L6003+L6007_DCT_nrecl-2013WP-NS-import-200.out
CHNL# 154: [IR141-DIGBYH69.0 VOLTS]
CHNL# 153: [IR137-STATIG25.0 VOLTS]
CHNL# 152: [IR114-GLENDH138.0 VOLTS]
CHNL# 151: [IR84-DALHOHV230.0 VOLTS]
CHNL# 150: [IR82 NUTBHV69.0 VOLTS]
CHNL# 149: [IR45 AMHERTP138.0 VOLTS]
TIME (SECONDS)
TUE, JAN 27 2009 15:55
WIND BUS VOLTS

2013 WINTER PEAK STORA 167, NS LOAD 2371
NS-NB=-200; NB-NE=300; CBX=543; ONI=773 ONS=863
1 PHASE FAULT L6003/L6007 AT 91H, CLEARED IN 6 CY
FAULT IMPEDANCE WITH BURNSIDE GENERATION OFF
FILE: b105b-L6003+L6007_DCT_nrecl-2013WP-NS-import-200.out
CHNL#S 20:4 [ANGL199169 [TUFTCV3 14.400] [3]] [ANGL156661 [DARL G1 22.000] [1]
CHNL#S 17:4 [ANGL199086 [TRENTON613.800] [6]] [ANGL156661 [DARL G1 22.000] [1]
CHNL#S 16:4 [ANGL199085 [TRENTN5 13.800] [5]] [ANGL156661 [DARL G1 22.000] [1]
CHNL#S 15:4 [ANGL199061 [TMP1 STO13.800] [1]] [ANGL156661 [DARL G1 22.000] [1]
CHNL#S 13:4 [ANGL199043 [ACONIG1 20.000] [1]] [ANGL156661 [DARL G1 22.000] [1]
CHNL#S 11:4 [ANGL199001 [LINGAN1 14.400] [1]] [ANGL156661 [DARL G1 22.000] [1]
TUE, JAN 27 2009 15:55
NS ANGLE

2013 WINTER PEAK STORA 167, NS LOAD 2371
NS-NB=-200; NB-NE=300; CBX=543; ONI=773 ONS=863
1 PHASE FAULT L6003/L6007 AT 91H, CLEARED IN 6 CY
FAULT IMPEDANCE WITH BURNSIDE GENERATION OFF
FILE: b105b-L6003+L6007_DCT_nrecl-2013WP-NS-import-200.out
CHNL#S 10:4 [ANGL190472 [BLLDNG2 19.000] [1]] [ANGL156661 [DARL G1 22.000] [1]
CHNL#S 6:4 [ANGL190456 [LEPRG1 26.000] [1]] [ANGL156661 [DARL G1 22.000] [1]
CHNL#S 5:4 [ANGL190450 [MACTG1 13.800] [1]] [ANGL156661 [DARL G1 22.000] [1]
CHNL#S 3:4 [ANGL126652 [RAV 3 22.000] [1]] [ANGL156661 [DARL G1 22.000] [1]
CHNL#S 2:4 [ANGL101063 [MYST G7 22.000] [1]] [ANGL156661 [DARL G1 22.000] [1]
CHNL#S 1:4 [ANGL100060 [MIS GT1 18.000] [1]] [ANGL156661 [DARL G1 22.000] [1]
TUE, JAN 27 2009 15:55
"NE,NY,NB ANGLE"

2013 WINTER PEAK STORA 167, NS LOAD 2371
NS-NB=-200; NB-NE=300; CBX=543; ONI=773 ONS=863
1 PHASE FAULT L6003/L6007 AT 91H, CLEARED IN 6 CY
FAULT IMPEDANCE WITH BURNSIDE GENERATION OFF
FILE: b105b-L6003+L6007_DCT_nrecl-2013WP-NS-import-200.out
CHNL# 59: [POWER199169 [TUFTCV3 14.400] [3]]
CHNL# 56: [POWER199086 [TRENTON613.800] [6]]
CHNL# 55: [POWER199085 [TRENTN5 13.800] [5]]
CHNL# 54: [POWER199061 [TMP1 STO13.800] [1]]
CHNL# 52: [POWER199043 [ACONIG1 20.000] [1]]
CHNL# 50: [POWER199001 [LINGAN1 14.400] [1]]
TUE, JAN 27 2009 15:55
NS MW

2013 WINTER PEAK STORA 167, NS LOAD 2371
NS-NB=-200; NB-NE=300; CBX=543; ONI=773 ONS=863
1 PHASE FAULT L6003/L6007 AT 91H, CLEARED IN 6 CY
FAULT IMPEDANCE WITH BURNSIDE GENERATION OFF
FILE: b105b-L6003+L6007_DCT_nrecl-2013WP-NS-import-200.out
CHNL# 49: [POWER190472 [BLLDNG2 19.000] [1]]
CHNL# 45: [POWER190456 [LEPRG1 26.000] [1]]
CHNL# 44: [POWER190450 [MACTG1 13.800] [1]]
CHNL# 42: [POWER126652 [RAV 3 22.000] [1]]
CHNL# 41: [POWER101063 [MYST G7 22.000] [1]]
CHNL# 40: [POWER100060 [MIS GT1 18.000] [1]]
TUE, JAN 27 2009 15:55
"NE,NY,NB POWER"

2013 WINTER PEAK STORA 167, NS LOAD 2371
NS-NB=-200; NB-NE=300; CBX=543; ONI=773 ONS=863
1 PHASE FAULT L6003/L6007 AT 91H, CLEARED IN 6 CY
FAULT IMPEDANCE WITH BURNSIDE GENERATION OFF
FILE: b105b-L6003+L6007_DCT_nrecl-2013WP-NS-import-200.out
CHNL# 119: [VARS IR141-DIGBY]
CHNL# 118: [VARS IR137-STATIA]
CHNL# 117: [VARS IR114-GLENDHU]
CHNL# 116: [VARS IR84-DALHOUSIE]
CHNL# 115: [VARS IR82_NUTTBY]
CHNL# 114: [VARS IR45_AMHERST]
TIME (SECONDS)
TUE, JAN 27 2009 15:55
NS WIND MV

2013 WINTER PEAK STORA 167, NS LOAD 2371
NS-NB=-200; NB-NE=300; CBX=543; ONI=773 ONS=863
1 PHASE FAULT L6003/L6007 AT 91H, CLEARED IN 6 CY
FAULT IMPEDANCE WITH BURNSIDE GENERATION OFF
FILE: b105b-L6003+L6007_DCT_nrecl-2013WP-NS-import-200.out
CHNL# 79: [POWER IR141-DIGBY]
CHNL# 78: [POWER IR137-STATIA]
CHNL# 77: [POWER IR114-GLENDHU]
CHNL# 76: [POWER IR84-DALHOUSIE]
CHNL# 75: [POWER IR82_NUTTBY]
CHNL# 74: [POWER IR45_AMHERST]
TIME (SECONDS)
TUE, JAN 27 2009 15:55
NS WIND MW

2013 WINTER PEAK STORA 167, NS LOAD 2371
NS-NB=-200; NB-NE=300; CBX=543; ONI=773 ONS=863
1 PHASE FAULT L6003/L6007 AT 91H, CLEARED IN 6 CY
FAULT IMPEDANCE WITH BURNSIDE GENERATION OFF
FILE: b105b-L6003+L6007_DCT_nrecl-2013WP-NS-import-200.out
CHNL# 133: [VOLT199125 [ONSLOW 345.00]]
CHNL# 132: [VOLT199120 [HOPEWELL345.00]]
CHNL# 131: [VOLT199045 [WOODBINE345.00]]
CHNL# 130: [VOLT190320 [SALBRY 345.00]]
CHNL# 128: [VOLT190004 [KESWICK 345.00]]
CHNL# 127: [VOLT 70002 [ORRINGTN345.00]]
TIME (SECONDS)
TUE, JAN 27 2009 15:55
"345KV VOLTAGE"

2013 WINTER PEAK STORA 167, NS LOAD 2371
NS-NB=-200; NB-NE=300; CBX=543; ONI=773 ONS=863
1 PHASE FAULT L6003/L6007 AT 91H, CLEARED IN 6 CY
FAULT IMPEDANCE WITH BURNSIDE GENERATION OFF
FILE: b105b-L6003+L6007_DCT_nrecl-2013WP-NS-import-200.out
CHNL# 125: 60*(1+[FREQ199125 [ONSLOW 345.00]])
CHNL# 124: 60*(1+[FREQ199120 [HOPEWELL345.00]])
CHNL# 123: 60*(1+[FREQ199045 [WOODBINE345.00]])
CHNL# 122: 60*(1+[FREQ190320 [SALBRY 345.00]])
CHNL# 121: 60*(1+[FREQ190197 [C.COVE 345.00]])
CHNL# 120: 60*(1+[FREQ 70002 [ORRINGTN345.00]])
TIME (SECONDS)
TUE, JAN 27 2009 15:55
FREQUENCY HZ

2013 WINTER PEAK STORA 167, NS LOAD 2371
NS-NB=-200; NB-NE=300; CBX=543; ONI=773 ONS=863
1 PHASE FAULT L6003/L6007 AT 91H, CLEARED IN 6 CY
FAULT IMPEDANCE WITH BURNSIDE GENERATION OFF
FILE: b105b-L6003+L6007_DCT_nrecl-2013WP-NS-import-200.out
CHNL# 146: [VOLT199280 [TUSKET A138.00]]
CHNL# 145: [VOLT199193 [HWAS 138.00]]
CHNL# 144: [VOLT199165 [TUFTCOVE138.00]]
CHNL# 143: [VOLT199135 [SPRNGHLL138.00]]
CHNL# 142: [VOLT199090 [SON-TREN138.00]]
CHNL# 141: [VOLT199051 [HASTINGS138.00]]
TIME (SECONDS)
TUE, JAN 27 2009 15:55
138KV BUS VOLTS

2013 WINTER PEAK STORA 167, NS LOAD 2371
NS-NB=-200; NB-NE=300; CBX=543; ONI=773 ONS=863
1 PHASE FAULT L6003/L6007 AT 91H, CLEARED IN 6 CY
FAULT IMPEDANCE WITH BURNSIDE GENERATION OFF
FILE: b105b-L6003+L6007_DCT_nrecl-2013WP-NS-import-200.out
CHNL# 140: [VOLT199240 [BWATER A230.00]]
CHNL# 139: [VOLT199200 [BRUSHY 230.00]]
CHNL# 138: [VOLT199130 [ONSLOW 230.00]]
CHNL# 137: [VOLT199050 [HASTINGS230.00]]
CHNL# 136: [VOLT199044 [PT.ACONI230.00]]
CHNL# 135: [VOLT199000 [LINGAN 230.00]]
TIME (SECONDS)
TUE, JAN 27 2009 15:55
230KV BUS VOLTS

2013 WINTER PEAK STORA 167, NS LOAD 2371
NS-NB=-200; NB-NE=300; CBX=543; ONI=773 ONS=863
1 PHASE FAULT L6003/L6007 AT 91H, CLEARED IN 6 CY
FAULT IMPEDANCE WITH BURNSIDE GENERATION OFF
FILE: b105b-L6003+L6007_DCT_nrecl-2013WP-NS-import-200.out
CHNL# 217: [L6533MW]
CHNL# 215: [L6503MW]
CHNL# 197: [L8003MW]
CHNL# 195: [L8004MW]
CHNL# 193: [L8001MW]
CHNL# 221: [L3001MW]
TIME (SECONDS)
TUE, JAN 27 2009 15:55
LINE FLOW MW

2013 WINTER PEAK STORA 167, NS LOAD 2371
NS-NB=-200; NB-NE=300; CBX=543; ONI=773 ONS=863
1 PHASE FAULT L6003/L6007 AT 91H, CLEARED IN 6 CY
FAULT IMPEDANCE WITH BURNSIDE GENERATION OFF
FILE: b105b-L6003+L6007_DCT_nrecl-2013WP-NS-import-200.out
CHNL# 154: [IR141-DIGBYH69.0 VOLTS]
CHNL# 153: [IR137-STATIG25.0 VOLTS]
CHNL# 152: [IR114-GLENDH138.0 VOLTS]
CHNL# 151: [IR84-DALHOHV230.0 VOLTS]
CHNL# 150: [IR82_NUTBHV69.0 VOLTS]
CHNL# 149: [IR45_AMHERTP138.0 VOLTS]
TIME (SECONDS)
TUE, JAN 27 2009 15:55
WIND BUS VOLTS

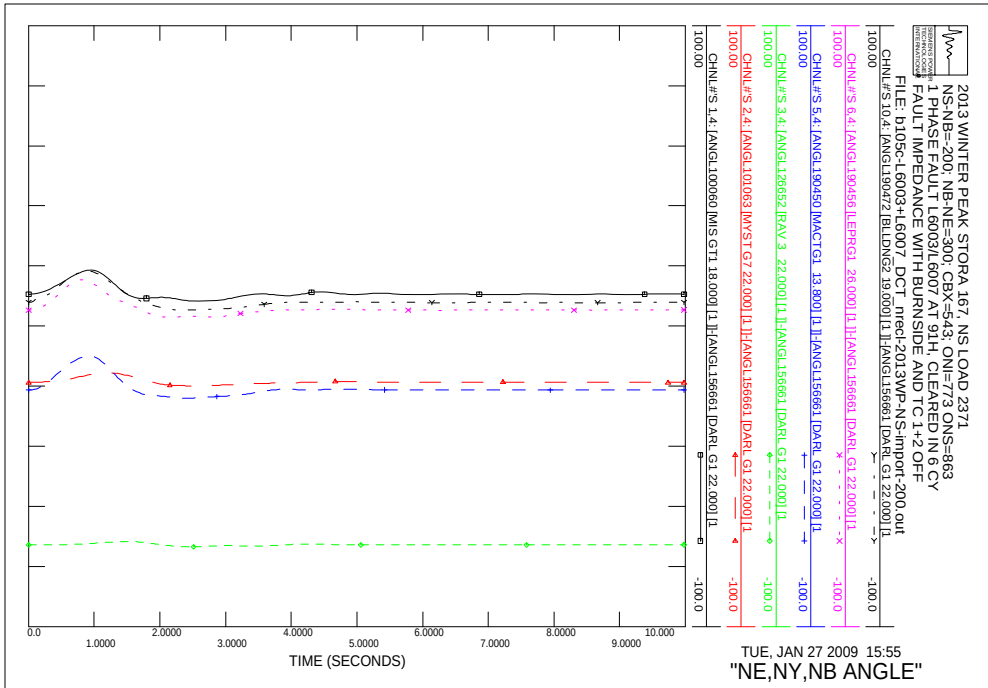
2013 WINTER PEAK STORA 167, NS LOAD 2371
NS-NB=-200; NB-NE=300; CBX=543; ONI=773 ONS=863
1 PHASE FAULT L6003/L6007 AT 91H, CLEARED IN 6 CY
FAULT IMPEDANCE WITH BURNSIDE AND TC 1+2 OFF
FILE: b105c-L6003+L6007_DCT_nrecl-2013WP-NS-import-200.out
CHNL#S 10,4: [ANGL190472 [BLLDNG2 19.000] [1]]-[ANGL156661 [DARL G1 22.000] [1
CHNL#S 6,4: [ANGL190456 [LEPRG1 26.000] [1]]-[ANGL156661 [DARL G1 22.000] [1
CHNL#S 5,4: [ANGL190450 [MACTG1 13.800] [1]]-[ANGL156661 [DARL G1 22.000] [1
CHNL#S 3,4: [ANGL126652 [RAV 3 22.000] [1]]-[ANGL156661 [DARL G1 22.000] [1
CHNL#S 2,4: [ANGL101063 [MYST G7 22.000] [1]]-[ANGL156661 [DARL G1 22.000] [1
CHNL#S 1,4: [ANGL100060 [MIS GT1 18.000] [1]]-[ANGL156661 [DARL G1 22.000] [1
100.00
-100.0
TIME (SECONDS)
TUE, JAN 27 2009 15:55
"NE,NY,NB ANGLE"

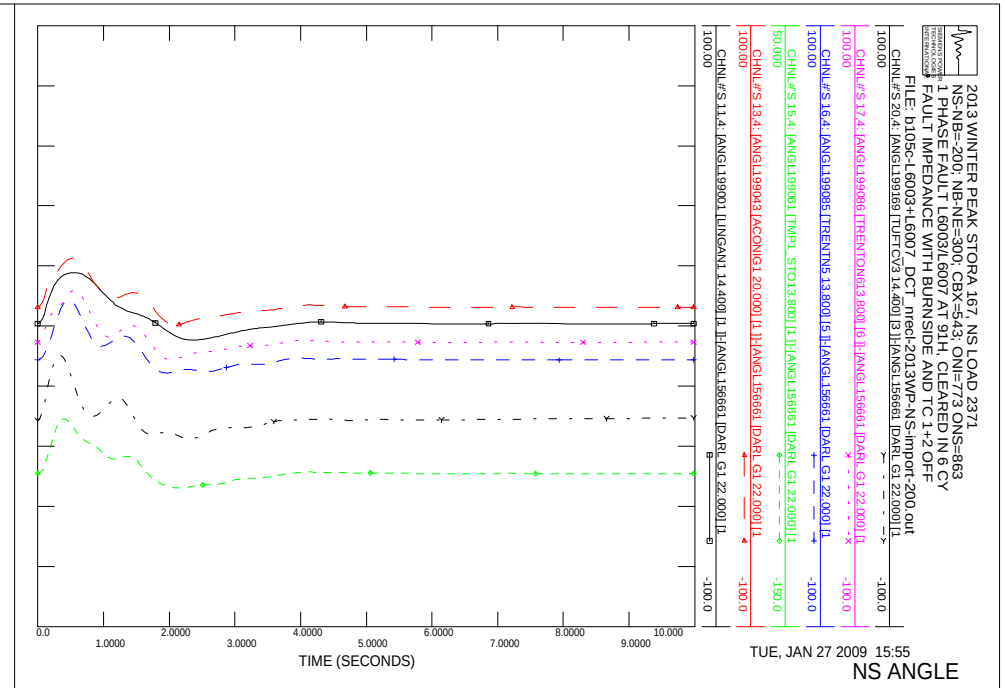
2013 WINTER PEAK STORA 167, NS LOAD 2371
NS-NB=-200; NB-NE=300; CBX=543; ONI=773 ONS=863
1 PHASE FAULT L6003/L6007 AT 91H, CLEARED IN 6 CY
FAULT IMPEDANCE WITH BURNSIDE AND TC 1+2 OFF
FILE: b105c-L6003+L6007_DCT_nrecl-2013WP-NS-import-200.out
CHNL#S 20,4: [ANGL199169 [TUFTCV3 14.400] [3]]-[ANGL156661 [DARL G1 22.000] [1
CHNL#S 17,4: [ANGL199086 [TRENTON613.800] [6]]-[ANGL156661 [DARL G1 22.000] [1
CHNL#S 16,4: [ANGL199085 [TRENTN5 13.800] [5]]-[ANGL156661 [DARL G1 22.000] [1
CHNL#S 15,4: [ANGL199061 [TMP1 STO13.800] [1]]-[ANGL156661 [DARL G1 22.000] [1
CHNL#S 13,4: [ANGL199043 [ACONIG1 20.000] [1]]-[ANGL156661 [DARL G1 22.000] [1
CHNL#S 11,4: [ANGL199001 [LINGAN1 14.400] [1]]-[ANGL156661 [DARL G1 22.000] [1
100.00
-100.0
TIME (SECONDS)
TUE, JAN 27 2009 15:55
NS ANGLE

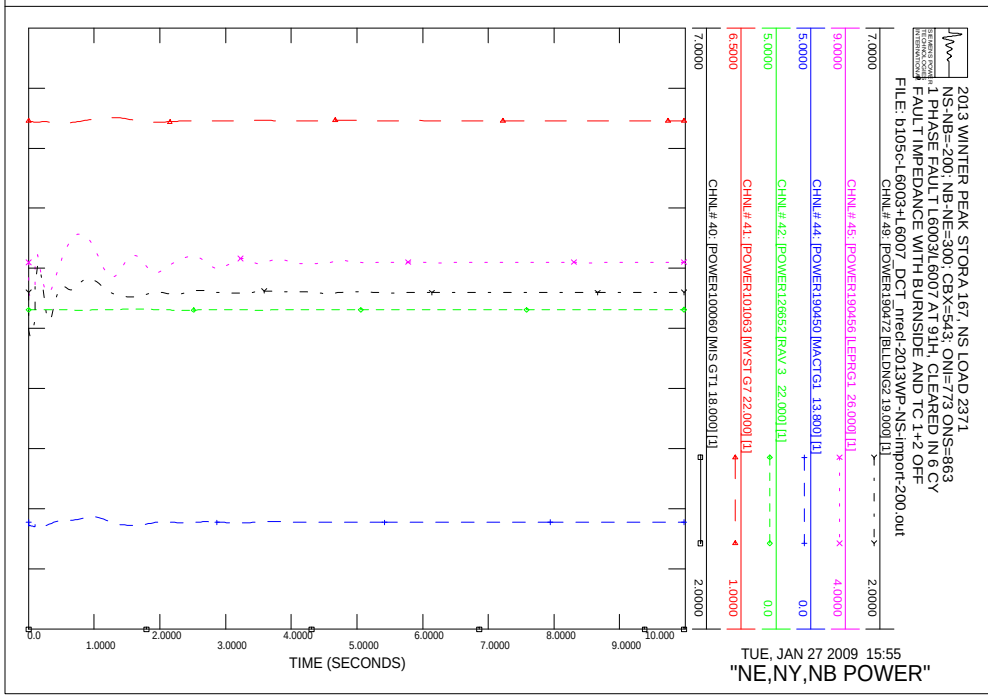
2013 WINTER PEAK STORA 167, NS LOAD 2371
NS-NB=-200; NB-NE=300; CBX=543; ONI=773 ONS=863
1 PHASE FAULT L6003/L6007 AT 91H, CLEARED IN 6 CY
FAULT IMPEDANCE WITH BURNSIDE AND TC 1+2 OFF
FILE: b105c-L6003+L6007_DCT_nrecl-2013WP-NS-import-200.out
CHNL# 49: [POWER190472 [BLLDNG2 19.000] [1]]
CHNL# 45: [POWER190456 [LEPRG1 26.000] [1]]
CHNL# 44: [POWER190450 [MACTG1 13.800] [1]]
CHNL# 42: [POWER126652 [RAV 3 22.000] [1]]
CHNL# 41: [POWER101063 [MYST G7 22.000] [1]]
CHNL# 40: [POWER100060 [MIS GT1 18.000] [1]]
7.0000
2.0000
TIME (SECONDS)
TUE, JAN 27 2009 15:55
"NE,NY,NB POWER"

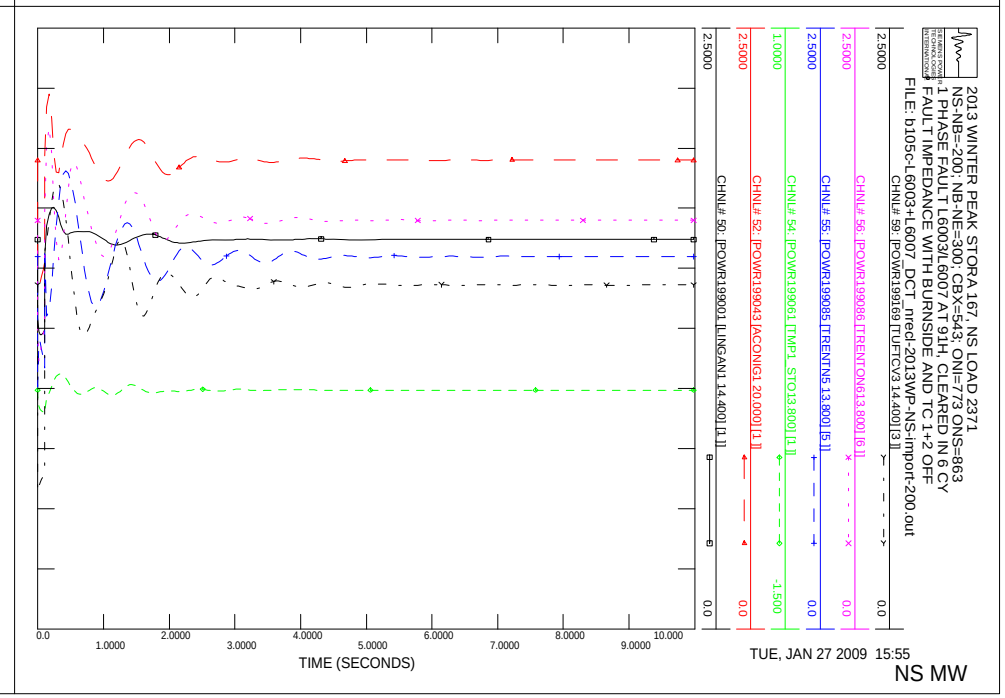
2013 WINTER PEAK STORA 167, NS LOAD 2371
NS-NB=-200; NB-NE=300; CBX=543; ONI=773 ONS=863
1 PHASE FAULT L6003/L6007 AT 91H, CLEARED IN 6 CY
FAULT IMPEDANCE WITH BURNSIDE AND TC 1+2 OFF
FILE: b105c-L6003+L6007_DCT_nrecl-2013WP-NS-import-200.out
CHNL# 59: [POWR199169 [TUFTCV3 14.400] [3]]
CHNL# 56: [POWR199086 [TRENTON613.800] [6]]
CHNL# 55: [POWR199085 [TRENTN5 13.800] [5]]
CHNL# 54: [POWR199061 [TMP1 STO13.800] [1]]
CHNL# 52: [POWR199043 [ACONIG1 20.000] [1]]
CHNL# 50: [POWR199001 [LINGAN1 14.400] [1]]
2.5000
0.0
TIME (SECONDS)
TUE, JAN 27 2009 15:55
NS MW

NS WIND MV

NS WIND MW

"345KV VOLTAGE"

FREQUENCY HZ

2013 WINTER PEAK STORA 167, NS LOAD 2371
NS-NB=-200; NB-NE=300; CBX=543; ONI=773 ONS=863
1 PHASE FAULT L6003/L6007 AT 91H, CLEARED IN 6 CY
FAULT IMPEDANCE WITH BURNSIDE AND TC 1+2 OFF
FILE: b105c-L6003+L6007_DCT_nrec1-2013WP-NS-import-200.out
CHNL# 146: [VOLT199280 [TUSKET A138.00]]
CHNL# 145: [VOLT199193 [HHWAS 138.00]]
CHNL# 144: [VOLT199165 [TUFTCOVE138.00]]
CHNL# 143: [VOLT199138 [SPRNGHIL138.00]]
CHNL# 142: [VOLT199090 [SON-TREN138.00]]
CHNL# 141: [VOLT199051 [HASTINGS138.00]]
TIME (SECONDS)
TUE, JAN 27 2009 15:55
138KV BUS VOLTS

2013 WINTER PEAK STORA 167, NS LOAD 2371
NS-NB=-200; NB-NE=300; CBX=543; ONI=773 ONS=863
1 PHASE FAULT L6003/L6007 AT 91H, CLEARED IN 6 CY
FAULT IMPEDANCE WITH BURNSIDE AND TC 1+2 OFF
FILE: b105c-L6003+L6007_DCT_nrec1-2013WP-NS-import-200.out
CHNL# 140: [VOLT199240 [BWATER A230.00]]
CHNL# 139: [VOLT199200 [BRUSHY 230.00]]
CHNL# 138: [VOLT199130 [ONSLOW 230.00]]
CHNL# 137: [VOLT199050 [HASTINGS230.00]]
CHNL# 136: [VOLT199044 [PT.ACONI230.00]]
CHNL# 135: [VOLT199000 [LINGAN 230.00]]
TIME (SECONDS)
TUE, JAN 27 2009 15:55
230KV BUS VOLTS

2013 WINTER PEAK STORA 167, NS LOAD 2371
NS-NB=-200; NB-NE=300; CBX=543; ONI=773 ONS=863
1 PHASE FAULT L6003/L6007 AT 91H, CLEARED IN 6 CY
FAULT IMPEDANCE WITH BURNSIDE AND TC 1+2 OFF
FILE: b105c-L6003+L6007_DCT_nrec1-2013WP-NS-import-200.out
CHNL# 217: [L6533MW]
CHNL# 215: [L6503MW]
CHNL# 197: [L8003MW]
CHNL# 195: [L8004MW]
CHNL# 193: [L8001MW]
CHNL# 221: [L3001MW]
TIME (SECONDS)
TUE, JAN 27 2009 15:55
LINE FLOW MW

2013 WINTER PEAK STORA 167, NS LOAD 2371
NS-NB=-200; NB-NE=300; CBX=543; ONI=773 ONS=863
1 PHASE FAULT L6003/L6007 AT 91H, CLEARED IN 6 CY
FAULT IMPEDANCE WITH BURNSIDE AND TC 1+2 OFF
FILE: b105c-L6003+L6007_DCT_nrec1-2013WP-NS-import-200.out
CHNL# 154: [IR141-DIGBYH69.0 VOLTS]
CHNL# 153: [IR137-STATIG25.0 VOLTS]
CHNL# 152: [IR114-GLENDH138.0 VOLTS]
CHNL# 151: [IR84-DALHOHV230.0 VOLTS]
CHNL# 150: [IR82_NUTBHV69.0 VOLTS]
CHNL# 149: [IR45_AMHERTP138.0 VOLTS]
TIME (SECONDS)
TUE, JAN 27 2009 15:55
WIND BUS VOLTS

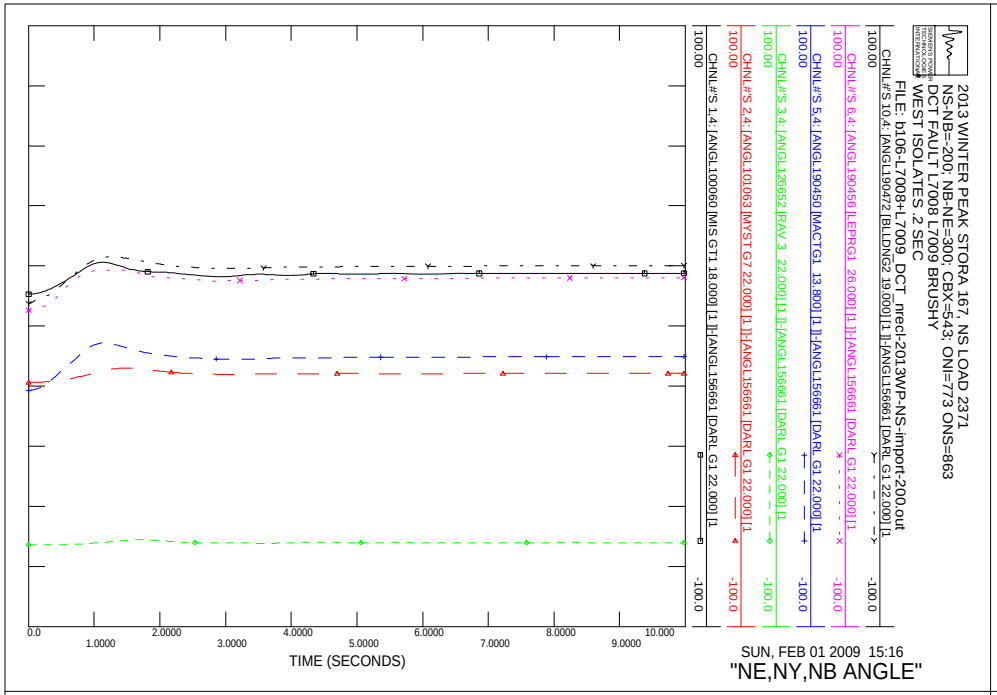
2013 WINTER PEAK STORA 167, NS LOAD 2371
NS-NB=-200; NB-NE=300; CBX=543; ONI=773 ONS=863
DCT FAULT L7008 L7009 BRUSHY
WEST ISOLATES .2 SEC
FILE: b106-L7008+L7009_DCT_nrecl-2013WP-NS-import-200.out
CHNL#S 10,4: [ANGL190472 [BLLDNG2 19.000] [1]]-[ANGL156661 [DARL G1 22.000] [1
CHNL#S 6,4: [ANGL190456 [LEPRG1 26.000] [1]]-[ANGL156661 [DARL G1 22.000] [1
CHNL#S 5,4: [ANGL190450 [MACTG1 13.800] [1]]-[ANGL156661 [DARL G1 22.000] [1
CHNL#S 3,4: [ANGL126652 [RAV 3 22.000] [1]]-[ANGL156661 [DARL G1 22.000] [1
CHNL#S 2,4: [ANGL101063 [MYST G7 22.000] [1]]-[ANGL156661 [DARL G1 22.000] [1
CHNL#S 1,4: [ANGL100060 [MIS GT1 18.000] [1]]-[ANGL156661 [DARL G1 22.000] [1
TIME (SECONDS)
SUN, FEB 01 2009 15:16
"NE,NY,NB ANGLE"

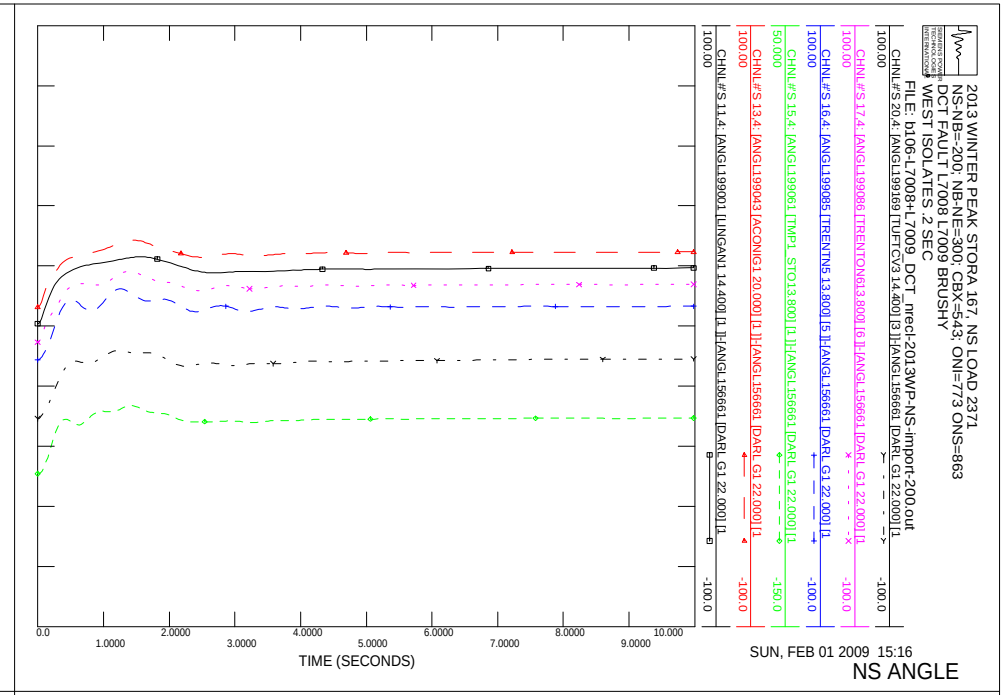
2013 WINTER PEAK STORA 167, NS LOAD 2371
NS-NB=-200; NB-NE=300; CBX=543; ONI=773 ONS=863
DCT FAULT L7008 L7009 BRUSHY
WEST ISOLATES .2 SEC
FILE: b106-L7008+L7009_DCT_nrecl-2013WP-NS-import-200.out
CHNL#S 20,4: [ANGL199169 [TUFTCV3 14.400] [3]]-[ANGL156661 [DARL G1 22.000] [1
CHNL#S 17,4: [ANGL199086 [TRENTON613.800] [6]]-[ANGL156661 [DARL G1 22.000] [1
CHNL#S 16,4: [ANGL199085 [TRENTN5 13.800] [5]]-[ANGL156661 [DARL G1 22.000] [1
CHNL#S 15,4: [ANGL199061 [TMP1 STO13.800] [1]]-[ANGL156661 [DARL G1 22.000] [1
CHNL#S 13,4: [ANGL199043 [ACONIG1 20.000] [1]]-[ANGL156661 [DARL G1 22.000] [1
CHNL#S 11,4: [ANGL199001 [LINGAN1 14.400] [1]]-[ANGL156661 [DARL G1 22.000] [1
TIME (SECONDS)
SUN, FEB 01 2009 15:16
NS ANGLE

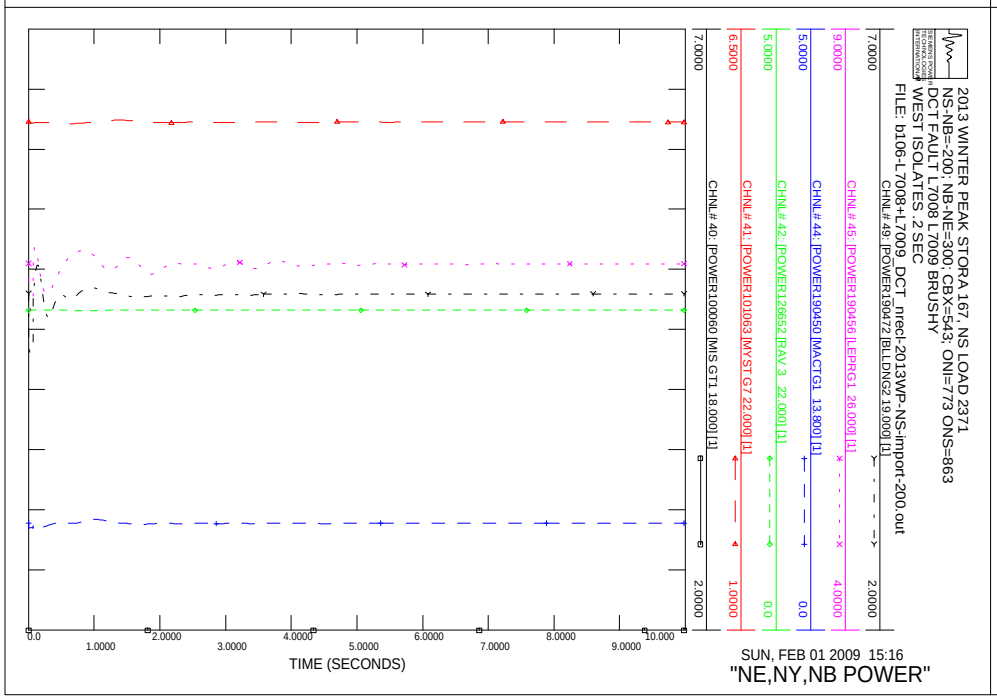
2013 WINTER PEAK STORA 167, NS LOAD 2371
NS-NB=-200; NB-NE=300; CBX=543; ONI=773 ONS=863
DCT FAULT L7008 L7009 BRUSHY
WEST ISOLATES .2 SEC
FILE: b106-L7008+L7009_DCT_nrecl-2013WP-NS-import-200.out
CHNL# 49: [POWER190472 [BLLDNG2 19.000] [1]]
CHNL# 45: [POWER190456 [LEPRG1 26.000] [1]]
CHNL# 44: [POWER190450 [MACTG1 13.800] [1]]
CHNL# 42: [POWER126652 [RAV 3 22.000] [1]]
CHNL# 41: [POWER101063 [MYST G7 22.000] [1]]
CHNL# 40: [POWER100060 [MIS GT1 18.000] [1]]
TIME (SECONDS)
SUN, FEB 01 2009 15:16
"NE,NY,NB POWER"

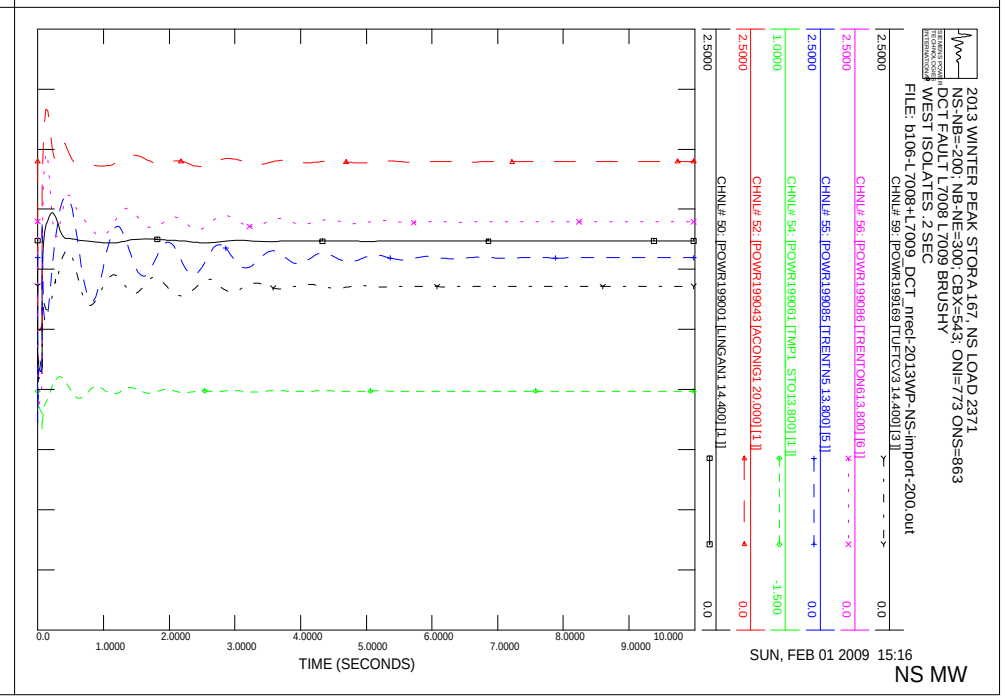
2013 WINTER PEAK STORA 167, NS LOAD 2371
NS-NB=-200; NB-NE=300; CBX=543; ONI=773 ONS=863
DCT FAULT L7008 L7009 BRUSHY
WEST ISOLATES .2 SEC
FILE: b106-L7008+L7009_DCT_nrecl-2013WP-NS-import-200.out
CHNL# 59: [POWR199169 [TUFTCV3 14.400] [3]]
CHNL# 56: [POWR199086 [TRENTON613.800] [6]]
CHNL# 55: [POWR199085 [TRENTN5 13.800] [5]]
CHNL# 54: [POWR199061 [TMP1 STO13.800] [1]]
CHNL# 52: [POWR199043 [ACONIG1 20.000] [1]]
CHNL# 50: [POWR199001 [LINGAN1 14.400] [1]]
TIME (SECONDS)
SUN, FEB 01 2009 15:16
NS MW

2013 WINTER PEAK STORA 167, NS LOAD 2371
NS-NB=-200; NB-NE=300; CBX=543; ONI=773 ONS=863
DCT FAULT L7008 L7009 BRUSHY
WEST ISOLATES .2 SEC
FILE: b106-L7008+L7009_DCT_nrecl-2013WP-NS-import-200.out
CHNL# 119: [VARS IR141-DIGBY]
CHNL# 118: [VARS IR137-STATIA]
CHNL# 117: [VARS IR114-GLENDHU]
CHNL# 116: [VARS IR84-DALHOUSIE]
CHNL# 115: [VARS IR82_NUTTBY]
CHNL# 114: [VARS IR45_AMHERST]
TIME (SECONDS)
SUN, FEB 01 2009 15:16
NS WIND MV

2013 WINTER PEAK STORA 167, NS LOAD 2371
NS-NB=-200; NB-NE=300; CBX=543; ONI=773 ONS=863
DCT FAULT L7008 L7009 BRUSHY
WEST ISOLATES .2 SEC
FILE: b106-L7008+L7009_DCT_nrecl-2013WP-NS-import-200.out
CHNL# 79: [POWER IR141-DIGBY]
CHNL# 78: [POWER IR137-STATIA]
CHNL# 77: [POWER IR114-GLENDHU]
CHNL# 76: [POWER IR84-DALHOUSIE]
CHNL# 75: [POWER IR82_NUTTBY]
CHNL# 74: [POWER IR45_AMHERST]
TIME (SECONDS)
SUN, FEB 01 2009 15:16
NS WIND MW

2013 WINTER PEAK STORA 167, NS LOAD 2371
NS-NB=-200; NB-NE=300; CBX=543; ONI=773 ONS=863
DCT FAULT L7008 L7009 BRUSHY
WEST ISOLATES .2 SEC
FILE: b106-L7008+L7009_DCT_nrecl-2013WP-NS-import-200.out
CHNL# 133: [VOLT199125 [ONSLOW 345.00]]
CHNL# 132: [VOLT199120 [HOPEWELL 345.00]]
CHNL# 131: [VOLT199045 [WOODBINE345.00]]
CHNL# 130: [VOLT190320 [SALBRY 345.00]]
CHNL# 128: [VOLT190004 [KESWICK 345.00]]
CHNL# 127: [VOLT 70002 [ORRINGTN345.00]]
TIME (SECONDS)
SUN, FEB 01 2009 15:16
"345KV VOLTAGE"

2013 WINTER PEAK STORA 167, NS LOAD 2371
NS-NB=-200; NB-NE=300; CBX=543; ONI=773 ONS=863
DCT FAULT L7008 L7009 BRUSHY
WEST ISOLATES .2 SEC
FILE: b106-L7008+L7009_DCT_nrecl-2013WP-NS-import-200.out
CHNL# 125: 60*(1+[FREQ199125 [ONSLOW 345.00]])
CHNL# 124: 60*(1+[FREQ199120 [HOPEWELL 345.00]])
CHNL# 123: 60*(1+[FREQ199045 [WOODBINE345.00]])
CHNL# 122: 60*(1+[FREQ190320 [SALBRY 345.00]])
CHNL# 121: 60*(1+[FREQ190197 [C.COVE 345.00]])
CHNL# 120: 60*(1+[FREQ 70002 [ORRINGTN345.00]])
TIME (SECONDS)
SUN, FEB 01 2009 15:16
FREQUENCY HZ

2013 WINTER PEAK STORA 167, NS LOAD 2371
NS-NB=-200; NB-NE=300; CBX=543; ONI=773 ONS=863
DCT FAULT L7008 L7009 BRUSHY
WEST ISOLATES .2 SEC
FILE: b106-L7008+L7009_DCT_nrect-2013WP-NS-import-200.out
CHNL# 146: [VOLT199280 [TUSKET A138.00]]
CHNL# 145: [VOLT199193 [HHWAS 138.00]]
CHNL# 144: [VOLT199165 [TUFTCOVE138.00]]
CHNL# 143: [VOLT199135 [SPRNGHILL138.00]]
CHNL# 142: [VOLT199090 [SON-TREN138.00]]
CHNL# 141: [VOLT199051 [HASTINGS138.00]]
1.2000
0.70000
0.0
1.0000
2.0000
3.0000
4.0000
5.0000
6.0000
7.0000
8.0000
9.0000
10.000
TIME (SECONDS)
SUN, FEB 01 2009 15:16
138KV BUS VOLTS

2013 WINTER PEAK STORA 167, NS LOAD 2371
NS-NB=-200; NB-NE=300; CBX=543; ONI=773 ONS=863
DCT FAULT L7008 L7009 BRUSHY
WEST ISOLATES .2 SEC
FILE: b106-L7008+L7009_DCT_nrect-2013WP-NS-import-200.out
CHNL# 140: [VOLT199240 [BWATER A230.00]]
CHNL# 139: [VOLT199200 [BRUSHY 230.00]]
CHNL# 138: [VOLT199130 [ONSLOW 230.00]]
CHNL# 137: [VOLT199050 [HASTINGS230.00]]
CHNL# 136: [VOLT199044 [PT.ACONI230.00]]
CHNL# 135: [VOLT199000 [LINGAN 230.00]]
1.2000
0.70000
0.0
1.0000
2.0000
3.0000
4.0000
5.0000
6.0000
7.0000
8.0000
9.0000
10.000
TIME (SECONDS)
SUN, FEB 01 2009 15:16
230KV BUS VOLTS

2013 WINTER PEAK STORA 167, NS LOAD 2371
NS-NB=-200; NB-NE=300; CBX=543; ONI=773 ONS=863
DCT FAULT L7008 L7009 BRUSHY
WEST ISOLATES .2 SEC
FILE: b106-L7008+L7009_DCT_nrect-2013WP-NS-import-200.out
CHNL# 217: [L6533MW]
CHNL# 215: [L6503MW]
CHNL# 197: [L8003MW]
CHNL# 195: [L8004MW]
CHNL# 193: [L8001MW]
CHNL# 221: [L3001MW]
250.00
500.00
1000.0
0.0
-250.0
-1000.
0.70000
0.0
1.0000
2.0000
3.0000
4.0000
5.0000
6.0000
7.0000
8.0000
9.0000
10.000
TIME (SECONDS)
SUN, FEB 01 2009 15:16
LINE FLOW MW

2013 WINTER PEAK STORA 167, NS LOAD 2371
NS-NB=-200; NB-NE=300; CBX=543; ONI=773 ONS=863
DCT FAULT L7008 L7009 BRUSHY
WEST ISOLATES .2 SEC
FILE: b106-L7008+L7009_DCT_nrect-2013WP-NS-import-200.out
CHNL# 154: [IR141-DIGBYH69.0 VOLTS]
CHNL# 153: [IR137-STATIG25.0 VOLTS]
CHNL# 152: [IR114-GLENDH138.0 VOLTS]
CHNL# 151: [IR84-DALHOHV230.0 VOLTS]
CHNL# 150: [IR82_NUTBHV69.0 VOLTS]
CHNL# 149: [IR45_AMHERTP138.0 VOLTS]
1.2000
0.70000
0.0
1.0000
2.0000
3.0000
4.0000
5.0000
6.0000
7.0000
8.0000
9.0000
10.000
TIME (SECONDS)
SUN, FEB 01 2009 15:16
WIND BUS VOLTS

2013 WINTER PEAK STORA 167, NS LOAD 2371
NS-NB=-200; NB-NE=300; CBX=543; ONI=773 ONS=863
1 PHASE FAULT HOPEWELL L6507, CLEARED IN 6 CY
BBU ON BREAKER 600 CLEARS THE STATION - NO SPS
FILE: c101-79N-606_BBU_mecl-2013WP-NS-import-200.out
CHNL# 20: [ANGL199169 [TUFTCV3 14.400] [3]] [ANGL156661 [DARL G1 22.000] [1]
CHNL# 17: [ANGL199086 [TRENTON6613.800] [6]] [ANGL156661 [DARL G1 22.000] [1]
CHNL# 16: [ANGL199085 [TRENTN5 13.800] [5]] [ANGL156661 [DARL G1 22.000] [1]
CHNL# 15: [ANGL199061 [TMP1 STO13.800] [1]] [ANGL156661 [DARL G1 22.000] [1]
CHNL# 13: [ANGL199043 [ACONIG1 20.000] [1]] [ANGL156661 [DARL G1 22.000] [1]
CHNL# 11: [ANGL199001 [LINGAN1 14.400] [1]] [ANGL156661 [DARL G1 22.000] [1]
TIME (SECONDS)
TUE, JAN 27 2009 15:55
NS ANGLE

2013 WINTER PEAK STORA 167, NS LOAD 2371
NS-NB=-200; NB-NE=300; CBX=543; ONI=773 ONS=863
1 PHASE FAULT HOPEWELL L6507, CLEARED IN 6 CY
BBU ON BREAKER 600 CLEARS THE STATION - NO SPS
FILE: c101-79N-606_BBU_mecl-2013WP-NS-import-200.out
CHNL# 10: [ANGL190472 [BLLDNG2 19.000] [1]] [ANGL156661 [DARL G1 22.000] [1]
CHNL# 6: [ANGL190456 [LEPRG1 26.000] [1]] [ANGL156661 [DARL G1 22.000] [1]
CHNL# 5: [ANGL190450 [MACTG1 13.800] [1]] [ANGL156661 [DARL G1 22.000] [1]
CHNL# 3: [ANGL126652 [RAV 3 22.000] [1]] [ANGL156661 [DARL G1 22.000] [1]
CHNL# 2: [ANGL101063 [MYST G7 22.000] [1]] [ANGL156661 [DARL G1 22.000] [1]
CHNL# 1: [ANGL100060 [MIS GT1 18.000] [1]] [ANGL156661 [DARL G1 22.000] [1]
TIME (SECONDS)
TUE, JAN 27 2009 15:55
"NE,NY,NB ANGLE"

2013 WINTER PEAK STORA 167, NS LOAD 2371
NS-NB=-200; NB-NE=300; CBX=543; ONI=773 ONS=863
1 PHASE FAULT HOPEWELL L6507, CLEARED IN 6 CY
BBU ON BREAKER 600 CLEARS THE STATION - NO SPS
FILE: c101-79N-606_BBU_mecl-2013WP-NS-import-200.out
CHNL# 59: [POWR199169 [TUFTCV3 14.400] [3]]
CHNL# 56: [POWR199086 [TRENTON6613.800] [6]]
CHNL# 55: [POWR199085 [TRENTN5 13.800] [5]]
CHNL# 54: [POWR199061 [TMP1 STO13.800] [1]]
CHNL# 52: [POWR199043 [ACONIG1 20.000] [1]]
CHNL# 50: [POWR199001 [LINGAN1 14.400] [1]]
TIME (SECONDS)
TUE, JAN 27 2009 15:55
NS MW

2013 WINTER PEAK STORA 167, NS LOAD 2371
NS-NB=-200; NB-NE=300; CBX=543; ONI=773 ONS=863
1 PHASE FAULT HOPEWELL L6507, CLEARED IN 6 CY
BBU ON BREAKER 600 CLEARS THE STATION - NO SPS
FILE: c101-79N-606_BBU_mecl-2013WP-NS-import-200.out
CHNL# 49: [POWER190472 [BLLDNG2 19.000] [1]]
CHNL# 45: [POWER190456 [LEPRG1 26.000] [1]]
CHNL# 44: [POWER190450 [MACTG1 13.800] [1]]
CHNL# 42: [POWER126652 [RAV 3 22.000] [1]]
CHNL# 41: [POWER101063 [MYST G7 22.000] [1]]
CHNL# 40: [POWER100060 [MIS GT1 18.000] [1]]
TIME (SECONDS)
TUE, JAN 27 2009 15:55
"NE,NY,NB POWER"

2013 WINTER PEAK STORA 167, NS LOAD 2371
NS-NB=-200; NB-NE=300; CBX=543; ONI=773 ONS=863
1 PHASE FAULT HOPEWELL L6507, CLEARED IN 6 CY
BBU ON BREAKER 600 CLEARS THE STATION - NO SPS
FILE: c101-79N-606_BBU_mecl-2013WP-NS-import-200.out
CHNL# 119: [VARS IR141-DIGBY]
CHNL# 118: [VARS IR137-STATIA]
CHNL# 117: [VARS IR114-GLENDHU]
CHNL# 116: [VARS IR84-DALHOUSIE]
CHNL# 115: [VARS IR82_NUTTBY]
CHNL# 114: [VARS IR45_AMHERST]
TIME (SECONDS)
TUE, JAN 27 2009 15:55
NS WIND MV

2013 WINTER PEAK STORA 167, NS LOAD 2371
NS-NB=-200; NB-NE=300; CBX=543; ONI=773 ONS=863
1 PHASE FAULT HOPEWELL L6507, CLEARED IN 6 CY
BBU ON BREAKER 600 CLEARS THE STATION - NO SPS
FILE: c101-79N-606_BBU_mecl-2013WP-NS-import-200.out
CHNL# 79: [POWER IR141-DIGBY]
CHNL# 78: [POWER IR137-STATIA]
CHNL# 77: [POWER IR114-GLENDHU]
CHNL# 76: [POWER IR84-DALHOUSIE]
CHNL# 75: [POWER IR82_NUTTBY]
CHNL# 74: [POWER IR45_AMHERST]
TIME (SECONDS)
TUE, JAN 27 2009 15:55
NS WIND MW

2013 WINTER PEAK STORA 167, NS LOAD 2371
NS-NB=-200; NB-NE=300; CBX=543; ONI=773 ONS=863
1 PHASE FAULT HOPEWELL L6507, CLEARED IN 6 CY
BBU ON BREAKER 600 CLEARS THE STATION - NO SPS
FILE: c101-79N-606_BBU_mecl-2013WP-NS-import-200.out
CHNL# 133: [VOLT199125 IONSLOW 345.00]
CHNL# 132: [VOLT199120 IHOPEWELL345.00]
CHNL# 131: [VOLT199045 IWOODBINE345.00]
CHNL# 130: [VOLT190320 ISALBRY 345.00]
CHNL# 128: [VOLT190004 IKESWICK 345.00]
CHNL# 127: [VOLT 70002 IORRINGTN345.00]
TIME (SECONDS)
TUE, JAN 27 2009 15:55
"345KV VOLTAGE"

2013 WINTER PEAK STORA 167, NS LOAD 2371
NS-NB=-200; NB-NE=300; CBX=543; ONI=773 ONS=863
1 PHASE FAULT HOPEWELL L6507, CLEARED IN 6 CY
BBU ON BREAKER 600 CLEARS THE STATION - NO SPS
FILE: c101-79N-606_BBU_mecl-2013WP-NS-import-200.out
CHNL# 125: 60*(1+[FREQ199125 IONSLOW 345.00])
CHNL# 124: 60*(1+[FREQ199120 IHOPEWELL345.00])
CHNL# 123: 60*(1+[FREQ199045 IWOODBINE345.00])
CHNL# 122: 60*(1+[FREQ190320 ISALBRY 345.00])
CHNL# 121: 60*(1+[FREQ190197 IC.COVE 345.00])
CHNL# 120: 60*(1+[FREQ 70002 IORRINGTN345.00])
TIME (SECONDS)
TUE, JAN 27 2009 15:55
FREQUENCY HZ

2013 WINTER PEAK STORA 167, NS LOAD 2371
NS-NB=-200; NB-NE=300; CBX=543; ONI=773 ONS=863
1 PHASE FAULT HOPEWELL L6507, CLEARED IN 6 CY
BBU ON BREAKER 600 CLEARS THE STATION - NO SPS
FILE: c101-79N-606_BBU_nrecl-2013WP-NS-import-200.out
CHNL# 146: [VOLT199280 [TUSKET A138.00]]
CHNL# 145: [VOLT199193 [HHWAS 138.00]]
CHNL# 144: [VOLT199165 [TUFTCOVE138.00]]
CHNL# 143: [VOLT199138 [SPRNGHILL138.00]]
CHNL# 142: [VOLT199090 [SON-TREN138.00]]
CHNL# 141: [VOLT199051 [HASTINGS138.00]]
TIME (SECONDS)
TUE, JAN 27 2009 15:55
138KV BUS VOLTS

2013 WINTER PEAK STORA 167, NS LOAD 2371
NS-NB=-200; NB-NE=300; CBX=543; ONI=773 ONS=863
1 PHASE FAULT HOPEWELL L6507, CLEARED IN 6 CY
BBU ON BREAKER 600 CLEARS THE STATION - NO SPS
FILE: c101-79N-606_BBU_nrecl-2013WP-NS-import-200.out
CHNL# 140: [VOLT199240 [BWATER A230.00]]
CHNL# 139: [VOLT199200 [BRUSHY 230.00]]
CHNL# 138: [VOLT199130 [ONSLOW 230.00]]
CHNL# 137: [VOLT199050 [HASTINGS230.00]]
CHNL# 136: [VOLT199044 [PT.ACONI230.00]]
CHNL# 135: [VOLT199000 [LINGAN 230.00]]
TIME (SECONDS)
TUE, JAN 27 2009 15:55
230KV BUS VOLTS

2013 WINTER PEAK STORA 167, NS LOAD 2371
NS-NB=-200; NB-NE=300; CBX=543; ONI=773 ONS=863
1 PHASE FAULT HOPEWELL L6507, CLEARED IN 6 CY
BBU ON BREAKER 600 CLEARS THE STATION - NO SPS
FILE: c101-79N-606_BBU_nrecl-2013WP-NS-import-200.out
CHNL# 217: [L6533MW]
CHNL# 215: [L6503MW]
CHNL# 197: [L8003MW]
CHNL# 195: [L8004MW]
CHNL# 193: [L8001MW]
CHNL# 221: [L3001MW]
TIME (SECONDS)
TUE, JAN 27 2009 15:55
LINE FLOW MW

2013 WINTER PEAK STORA 167, NS LOAD 2371
NS-NB=-200; NB-NE=300; CBX=543; ONI=773 ONS=863
1 PHASE FAULT HOPEWELL L6507, CLEARED IN 6 CY
BBU ON BREAKER 600 CLEARS THE STATION - NO SPS
FILE: c101-79N-606_BBU_nrecl-2013WP-NS-import-200.out
CHNL# 154: [IR141-DIGBYH69.0 VOLTS]
CHNL# 153: [IR137-STATIG25.0 VOLTS]
CHNL# 152: [IR114-GLENDH138.0 VOLTS]
CHNL# 151: [IR84-DALHOHV230.0 VOLTS]
CHNL# 150: [IR82 NUTBHV69.0 VOLTS]
CHNL# 149: [IR45 AMHERTP138.0 VOLTS]
TIME (SECONDS)
TUE, JAN 27 2009 15:55
WIND BUS VOLTS

2013 WINTER PEAK STORA 167, NS LOAD 2371
NS-NB=-200; NB-NE=300; CBX=543; ONI=773 ONS=863
1 PHASE FAULT HOPEWELL L6507, CLEARED IN 6 CY
BBU ON BREAKER 600 CLEARS THE STATION - 1 UNIT SPS
FILE: c101s-79N-606_BBU_nrecl-2013WP-NS-import-200.out
CHNL# 20: [ANGL199169 [TUFTCV3 14.400] [3]] [ANGL156661 [DARL G1 22.000] [1
CHNL# 17: [ANGL199086 [TRENTON613.800] [6]] [ANGL156661 [DARL G1 22.000] [1
CHNL# 16: [ANGL199085 [TRENTN5 13.800] [5]] [ANGL156661 [DARL G1 22.000] [1
CHNL# 15: [ANGL199061 [TMP1 STO13.800] [1]] [ANGL156661 [DARL G1 22.000] [1
CHNL# 13: [ANGL199043 [ACONIG1 20.000] [1]] [ANGL156661 [DARL G1 22.000] [1
CHNL# 11: [ANGL199001 [LINGAN1 14.400] [1]] [ANGL156661 [DARL G1 22.000] [1
TIME (SECONDS)
TUE, JAN 27 2009 15:55
NS ANGLE

2013 WINTER PEAK STORA 167, NS LOAD 2371
NS-NB=-200; NB-NE=300; CBX=543; ONI=773 ONS=863
1 PHASE FAULT HOPEWELL L6507, CLEARED IN 6 CY
BBU ON BREAKER 600 CLEARS THE STATION - 1 UNIT SPS
FILE: c101s-79N-606_BBU_nrecl-2013WP-NS-import-200.out
CHNL# 10: [ANGL190472 [BLLDNG2 19.000] [1]] [ANGL156661 [DARL G1 22.000] [1
CHNL# 6: [ANGL190456 [LEPRG1 26.000] [1]] [ANGL156661 [DARL G1 22.000] [1
CHNL# 5: [ANGL190450 [MACTG1 13.800] [1]] [ANGL156661 [DARL G1 22.000] [1
CHNL# 3: [ANGL126652 [RAV 3 22.000] [1]] [ANGL156661 [DARL G1 22.000] [1
CHNL# 2: [ANGL101063 [MYST G7 22.000] [1]] [ANGL156661 [DARL G1 22.000] [1
CHNL# 1: [ANGL100060 [MIS GT1 18.000] [1]] [ANGL156661 [DARL G1 22.000] [1
TIME (SECONDS)
TUE, JAN 27 2009 15:55
"NE,NY,NB ANGLE"

2013 WINTER PEAK STORA 167, NS LOAD 2371
NS-NB=-200; NB-NE=300; CBX=543; ONI=773 ONS=863
1 PHASE FAULT HOPEWELL L6507, CLEARED IN 6 CY
BBU ON BREAKER 600 CLEARS THE STATION - 1 UNIT SPS
FILE: c101s-79N-606_BBU_nrecl-2013WP-NS-import-200.out
CHNL# 59: [POWR199169 [TUFTCV3 14.400] [3]]
CHNL# 56: [POWR199086 [TRENTON613.800] [6]]
CHNL# 55: [POWR199085 [TRENTN5 13.800] [5]]
CHNL# 54: [POWR199061 [TMP1 STO13.800] [1]]
CHNL# 52: [POWR199043 [ACONIG1 20.000] [1]]
CHNL# 50: [POWR199001 [LINGAN1 14.400] [1]]
TIME (SECONDS)
TUE, JAN 27 2009 15:55
NS MW

2013 WINTER PEAK STORA 167, NS LOAD 2371
NS-NB=-200; NB-NE=300; CBX=543; ONI=773 ONS=863
1 PHASE FAULT HOPEWELL L6507, CLEARED IN 6 CY
BBU ON BREAKER 600 CLEARS THE STATION - 1 UNIT SPS
FILE: c101s-79N-606_BBU_nrecl-2013WP-NS-import-200.out
CHNL# 49: [POWER190472 [BLLDNG2 19.000] [1]]
CHNL# 45: [POWER190456 [LEPRG1 26.000] [1]]
CHNL# 44: [POWER190450 [MACTG1 13.800] [1]]
CHNL# 42: [POWER126652 [RAV 3 22.000] [1]]
CHNL# 41: [POWER101063 [MYST G7 22.000] [1]]
CHNL# 40: [POWER100060 [MIS GT1 18.000] [1]]
TIME (SECONDS)
TUE, JAN 27 2009 15:55
"NE,NY,NB POWER"

2013 WINTER PEAK STORA 167, NS LOAD 2371
NS-NB=-200; NB-NE=300; CBX=543; ONI=773 ONS=863
1 PHASE FAULT HOPEWELL L6507, CLEARED IN 6 CY
BBU ON BREAKER 600 CLEARS THE STATION - 1 UNIT SPS
FILE: c101s-79N-606_BBU_mrecl-2013WP-NS-import-200.out
CHNL# 119: [VARS IR141-DIGBY]
CHNL# 118: [VARS IR137-STATIA]
CHNL# 117: [VARS IR114-GLENDHU]
CHNL# 116: [VARS IR84-DALHOUSIE]
CHNL# 115: [VARS IR82_NUTTBY]
CHNL# 114: [VARS IR45_AMHERST]
TIME (SECONDS)
TUE, JAN 27 2009 15:56
NS WIND MV

2013 WINTER PEAK STORA 167, NS LOAD 2371
NS-NB=-200; NB-NE=300; CBX=543; ONI=773 ONS=863
1 PHASE FAULT HOPEWELL L6507, CLEARED IN 6 CY
BBU ON BREAKER 600 CLEARS THE STATION - 1 UNIT SPS
FILE: c101s-79N-606_BBU_mrecl-2013WP-NS-import-200.out
CHNL# 79: [POWER IR141-DIGBY]
CHNL# 78: [POWER IR137-STATIA]
CHNL# 77: [POWER IR114-GLENDHU]
CHNL# 76: [POWER IR84-DALHOUSIE]
CHNL# 75: [POWER IR82_NUTTBY]
CHNL# 74: [POWER IR45_AMHERST]
TIME (SECONDS)
TUE, JAN 27 2009 15:56
NS WIND MW

2013 WINTER PEAK STORA 167, NS LOAD 2371
NS-NB=-200; NB-NE=300; CBX=543; ONI=773 ONS=863
1 PHASE FAULT HOPEWELL L6507, CLEARED IN 6 CY
BBU ON BREAKER 600 CLEARS THE STATION - 1 UNIT SPS
FILE: c101s-79N-606_BBU_mrecl-2013WP-NS-import-200.out
CHNL# 133: [VOLT199125 [ONSLOW 345.00]]
CHNL# 132: [VOLT199120 [HOPEWELL345.00]]
CHNL# 131: [VOLT199045 [WOODBINE345.00]]
CHNL# 130: [VOLT190320 [SALBRY 345.00]]
CHNL# 128: [VOLT190004 [KESWICK 345.00]]
CHNL# 127: [VOLT 70002 [ORRINGTN345.00]]
TIME (SECONDS)
TUE, JAN 27 2009 15:56
"345KV VOLTAGE"

2013 WINTER PEAK STORA 167, NS LOAD 2371
NS-NB=-200; NB-NE=300; CBX=543; ONI=773 ONS=863
1 PHASE FAULT HOPEWELL L6507, CLEARED IN 6 CY
BBU ON BREAKER 600 CLEARS THE STATION - 1 UNIT SPS
FILE: c101s-79N-606_BBU_mrecl-2013WP-NS-import-200.out
CHNL# 125: 60*(1+[FREQ199125 [ONSLOW 345.00]])
CHNL# 124: 60*(1+[FREQ199120 [HOPEWELL345.00]])
CHNL# 123: 60*(1+[FREQ199045 [WOODBINE345.00]])
CHNL# 122: 60*(1+[FREQ190320 [SALBRY 345.00]])
CHNL# 121: 60*(1+[FREQ190197 [C.COVE 345.00]])
CHNL# 120: 60*(1+[FREQ 70002 [ORRINGTN345.00]])
TIME (SECONDS)
TUE, JAN 27 2009 15:56
FREQUENCY HZ

138KV BUS VOLTS

230KV BUS VOLTS

LINE FLOW MW

WIND BUS VOLTS

2013 WINTER PEAK STORA 167, NS LOAD 2371
NS-NB=-200; NB-NE=300; CBX=543; ONI=773 ONS=863
1 PHASE FAULT ON ONSLOW B61
BBU ON BUS TIE REAKER
FILE: c102-1N-600_BBU_nrecl-2013WP-NS-import-200.out
CHNL# 20: [ANGL199169 [TUFTCV3 14.400] [3]] [ANGL156661 [DARL G1 22.000] [1
CHNL# 17: [ANGL199086 [TRENTON6 13.800] [6]] [ANGL156661 [DARL G1 22.000] [1
CHNL# 16: [ANGL199085 [TRENTN5 13.800] [5]] [ANGL156661 [DARL G1 22.000] [1
CHNL# 15: [ANGL199061 [TMP1 STO 13.800] [1]] [ANGL156661 [DARL G1 22.000] [1
CHNL# 13: [ANGL199043 [ACONIG1 20.000] [1]] [ANGL156661 [DARL G1 22.000] [1
CHNL# 11: [ANGL199001 [LINGAN1 14.400] [1]] [ANGL156661 [DARL G1 22.000] [1
100.00
-100.0
0.0
1.0000
2.0000
3.0000
4.0000
5.0000
6.0000
7.0000
8.0000
9.0000
10.000
TIME (SECONDS)
TUE, JAN 27 2009 15:56
NS ANGLE

2013 WINTER PEAK STORA 167, NS LOAD 2371
NS-NB=-200; NB-NE=300; CBX=543; ONI=773 ONS=863
1 PHASE FAULT ON ONSLOW B61
BBU ON BUS TIE REAKER
FILE: c102-1N-600_BBU_nrecl-2013WP-NS-import-200.out
CHNL# 10: [ANGL190472 [BLLDNG2 19.000] [1]] [ANGL156661 [DARL G1 22.000] [1
CHNL# 6: [ANGL190456 [LEPRG1 26.000] [1]] [ANGL156661 [DARL G1 22.000] [1
CHNL# 5: [ANGL190450 [MACTG1 13.800] [1]] [ANGL156661 [DARL G1 22.000] [1
CHNL# 3: [ANGL126652 [RAV 3 22.000] [1]] [ANGL156661 [DARL G1 22.000] [1
CHNL# 2: [ANGL101063 [MYST G7 22.000] [1]] [ANGL156661 [DARL G1 22.000] [1
CHNL# 1: [ANGL100060 [MIS GT1 18.000] [1]] [ANGL156661 [DARL G1 22.000] [1
100.00
-100.0
0.0
1.0000
2.0000
3.0000
4.0000
5.0000
6.0000
7.0000
8.0000
9.0000
10.000
TIME (SECONDS)
TUE, JAN 27 2009 15:56
"NE,NY,NB ANGLE"

2013 WINTER PEAK STORA 167, NS LOAD 2371
NS-NB=-200; NB-NE=300; CBX=543; ONI=773 ONS=863
1 PHASE FAULT ON ONSLOW B61
BBU ON BUS TIE REAKER
FILE: c102-1N-600_BBU_nrecl-2013WP-NS-import-200.out
CHNL# 59: [POWER199169 [TUFTCV3 14.400] [3]]
CHNL# 56: [POWER199086 [TRENTON6 13.800] [6]]
CHNL# 55: [POWER199085 [TRENTN5 13.800] [5]]
CHNL# 54: [POWER199061 [TMP1 STO 13.800] [1]]
CHNL# 52: [POWER199043 [ACONIG1 20.000] [1]]
CHNL# 50: [POWER199001 [LINGAN1 14.400] [1]]
2.5000
1.0000
-1.500
0.0
0.0
1.0000
2.0000
3.0000
4.0000
5.0000
6.0000
7.0000
8.0000
9.0000
10.000
TIME (SECONDS)
TUE, JAN 27 2009 15:56
NS MW

2013 WINTER PEAK STORA 167, NS LOAD 2371
NS-NB=-200; NB-NE=300; CBX=543; ONI=773 ONS=863
1 PHASE FAULT ON ONSLOW B61
BBU ON BUS TIE REAKER
FILE: c102-1N-600_BBU_nrecl-2013WP-NS-import-200.out
CHNL# 49: [POWER190472 [BLLDNG2 19.000] [1]]
CHNL# 45: [POWER190456 [LEPRG1 26.000] [1]]
CHNL# 44: [POWER190450 [MACTG1 13.800] [1]]
CHNL# 42: [POWER126652 [RAV 3 22.000] [1]]
CHNL# 41: [POWER101063 [MYST G7 22.000] [1]]
CHNL# 40: [POWER100060 [MIS GT1 18.000] [1]]
7.0000
9.0000
5.0000
5.0000
6.5000
7.0000
2.0000
4.0000
0.0
0.0
1.0000
0.0
1.0000
2.0000
3.0000
4.0000
5.0000
6.0000
7.0000
8.0000
9.0000
10.000
TIME (SECONDS)
TUE, JAN 27 2009 15:56
"NE,NY,NB POWER"

2013 WINTER PEAK STORA 167, NS LOAD 2371
NS-NB=-200; NB-NE=300; CBX=543; ONI=773 ONS=863
1 PHASE FAULT ON ONSLOW B61
BBU ON BUS TIE REAKER
FILE: c102-1N-600_BBU_nrecl-2013WP-NS-import-200.out
CHNL# 119: [VARS IR141-DIGBY]
CHNL# 118: [VARS IR137-STATIA]
CHNL# 117: [VARS IR114-GLENDHU]
CHNL# 116: [VARS IR84-DALHOUSIE]
CHNL# 115: [VARS IR82_NUTTBY]
CHNL# 114: [VARS IR45_AMHERST]
0.50000
-0.5000
0.0
1.0000
2.0000
3.0000
4.0000
5.0000
6.0000
7.0000
8.0000
9.0000
10.000
TIME (SECONDS)
TUE, JAN 27 2009 15:56
NS WIND MV

2013 WINTER PEAK STORA 167, NS LOAD 2371
NS-NB=-200; NB-NE=300; CBX=543; ONI=773 ONS=863
1 PHASE FAULT ON ONSLOW B61
BBU ON BUS TIE REAKER
FILE: c102-1N-600_BBU_nrecl-2013WP-NS-import-200.out
CHNL# 79: [POWER IR141-DIGBY]
CHNL# 78: [POWER IR137-STATIA]
CHNL# 77: [POWER IR114-GLENDHU]
CHNL# 76: [POWER IR84-DALHOUSIE]
CHNL# 75: [POWER IR82_NUTTBY]
CHNL# 74: [POWER IR45_AMHERST]
1.0000
0.0
1.0000
2.0000
3.0000
4.0000
5.0000
6.0000
7.0000
8.0000
9.0000
10.000
TIME (SECONDS)
TUE, JAN 27 2009 15:56
NS WIND MW

2013 WINTER PEAK STORA 167, NS LOAD 2371
NS-NB=-200; NB-NE=300; CBX=543; ONI=773 ONS=863
1 PHASE FAULT ON ONSLOW B61
BBU ON BUS TIE REAKER
FILE: c102-1N-600_BBU_nrecl-2013WP-NS-import-200.out
CHNL# 133: [VOLT199125 [ONSLOW 345.00]]
CHNL# 132: [VOLT199120 [HOPEWELL345.00]]
CHNL# 131: [VOLT199045 [WOODBINE345.00]]
CHNL# 130: [VOLT190320 [SALBRY 345.00]]
CHNL# 128: [VOLT190004 [KESWICK 345.00]]
CHNL# 127: [VOLT 70002 [ORRINGTN345.00]]
1.1000
0.90000
0.0
1.0000
2.0000
3.0000
4.0000
5.0000
6.0000
7.0000
8.0000
9.0000
10.000
TIME (SECONDS)
TUE, JAN 27 2009 15:56
"345KV VOLTAGE"

2013 WINTER PEAK STORA 167, NS LOAD 2371
NS-NB=-200; NB-NE=300; CBX=543; ONI=773 ONS=863
1 PHASE FAULT ON ONSLOW B61
BBU ON BUS TIE REAKER
FILE: c102-1N-600_BBU_nrecl-2013WP-NS-import-200.out
CHNL# 125: 60*(1+[FREQ199125 [ONSLOW 345.00]])
CHNL# 124: 60*(1+[FREQ199120 [HOPEWELL345.00]])
CHNL# 123: 60*(1+[FREQ199045 [WOODBINE345.00]])
CHNL# 122: 60*(1+[FREQ190320 [SALBRY 345.00]])
CHNL# 121: 60*(1+[FREQ190197 [C.COVE 345.00]])
CHNL# 120: 60*(1+[FREQ 70002 [ORRINGTN345.00]])
60.500
59.500
0.0
1.0000
2.0000
3.0000
4.0000
5.0000
6.0000
7.0000
8.0000
9.0000
10.000
TIME (SECONDS)
TUE, JAN 27 2009 15:56
FREQUENCY HZ

2013 WINTER PEAK STORA 167, NS LOAD 2371
NS-NB=-200; NB-NE=300; CBX=543; ONI=773 ONS=863
1 PHASE FAULT ON ONSLOW B61
BBU ON BUS TIE REAKER
FILE: c102-1N-600_BBU_nrecl-2013WP-NS-import-200.out
CHNL# 146: [VOLT199280 [TUSKET A138.00]]
CHNL# 145: [VOLT199193 [HHWAS 138.00]]
CHNL# 144: [VOLT199165 [TUFTCOVE138.00]]
CHNL# 143: [VOLT199138 [SPRNGHILL138.00]]
CHNL# 142: [VOLT199090 [50N-TREN138.00]]
CHNL# 141: [VOLT199051 [HASTINGS138.00]]
TIME (SECONDS)
TUE, JAN 27 2009 15:56
138KV BUS VOLTS

2013 WINTER PEAK STORA 167, NS LOAD 2371
NS-NB=-200; NB-NE=300; CBX=543; ONI=773 ONS=863
1 PHASE FAULT ON ONSLOW B61
BBU ON BUS TIE REAKER
FILE: c102-1N-600_BBU_nrecl-2013WP-NS-import-200.out
CHNL# 140: [VOLT199240 [BWATER A230.00]]
CHNL# 139: [VOLT199200 [BRUSHY 230.00]]
CHNL# 138: [VOLT199130 [ONSLOW 230.00]]
CHNL# 137: [VOLT199050 [HASTINGS230.00]]
CHNL# 136: [VOLT199044 [PT.ACONI230.00]]
CHNL# 135: [VOLT199000 [LINGAN 230.00]]
TIME (SECONDS)
TUE, JAN 27 2009 15:56
230KV BUS VOLTS

2013 WINTER PEAK STORA 167, NS LOAD 2371
NS-NB=-200; NB-NE=300; CBX=543; ONI=773 ONS=863
1 PHASE FAULT ON ONSLOW B61
BBU ON BUS TIE REAKER
FILE: c102-1N-600_BBU_nrecl-2013WP-NS-import-200.out
CHNL# 217: [L6513NMW]
CHNL# 215: [L6503MW]
CHNL# 197: [L8003MW]
CHNL# 195: [L8004MW]
CHNL# 193: [L8001MW]
CHNL# 221: [L3001MW]
TIME (SECONDS)
TUE, JAN 27 2009 15:56
LINE FLOW MW

2013 WINTER PEAK STORA 167, NS LOAD 2371
NS-NB=-200; NB-NE=300; CBX=543; ONI=773 ONS=863
1 PHASE FAULT ON ONSLOW B61
BBU ON BUS TIE REAKER
FILE: c102-1N-600_BBU_nrecl-2013WP-NS-import-200.out
CHNL# 154: [IR141-DIGBYH69.0 VOLTS]
CHNL# 153: [IR137-STATIG25.0 VOLTS]
CHNL# 152: [IR114-GLENDH138.0 VOLTS]
CHNL# 151: [IR84-DALHOHV230.0 VOLTS]
CHNL# 150: [IR82-NUTBHV69.0 VOLTS]
CHNL# 149: [IR45-AMHERTP138.0 VOLTS]
TIME (SECONDS)
TUE, JAN 27 2009 15:56
WIND BUS VOLTS

2013 WINTER PEAK STORA 167, NS LOAD 2371
NS-NB=-200; NB-NE=300; CBX=543; ONI=773 ONS=863
1 PHASE FAULT L6016 AT 120H, BBU ON 120H-622
TRIPS L6016 L6005 IN 14 CYCLES
FILE: c103-120H-622_BBU_nrect-2013WP-NS-import-200.out
CHNL# 20: [ANGL199169 [TUFTCV3 14.400] [3]] [ANGL156661 [DARL G1 22.000] [1
CHNL# 17: [ANGL199086 [TRENTON613.800] [6]] [ANGL156661 [DARL G1 22.000] [1
CHNL# 16: [ANGL199085 [TRENTN5 13.800] [5]] [ANGL156661 [DARL G1 22.000] [1
CHNL# 15: [ANGL199061 [TMP1 STO13.800] [1]] [ANGL156661 [DARL G1 22.000] [1
CHNL# 13: [ANGL199043 [ACONIG1 20.000] [1]] [ANGL156661 [DARL G1 22.000] [1
CHNL# 11: [ANGL199001 [LINGAN1 14.400] [1]] [ANGL156661 [DARL G1 22.000] [1
100.00
-100.0
50.000
-150.0
0.0
1.0000
2.0000
3.0000
4.0000
5.0000
6.0000
7.0000
8.0000
9.0000
10.000
TIME (SECONDS)
TUE, JAN 27 2009 15:56
NS ANGLE

2013 WINTER PEAK STORA 167, NS LOAD 2371
NS-NB=-200; NB-NE=300; CBX=543; ONI=773 ONS=863
1 PHASE FAULT L6016 AT 120H, BBU ON 120H-622
TRIPS L6016 L6005 IN 14 CYCLES
FILE: c103-120H-622_BBU_nrect-2013WP-NS-import-200.out
CHNL# 10: [ANGL190472 [BLLDNG2 19.000] [1]] [ANGL156661 [DARL G1 22.000] [1
CHNL# 6: [ANGL190456 [LEPRG1 26.000] [1]] [ANGL156661 [DARL G1 22.000] [1
CHNL# 5: [ANGL190450 [MACTG1 13.800] [1]] [ANGL156661 [DARL G1 22.000] [1
CHNL# 3: [ANGL126652 [RAV 3 22.000] [1]] [ANGL156661 [DARL G1 22.000] [1
CHNL# 2: [ANGL101063 [MYST G7 22.000] [1]] [ANGL156661 [DARL G1 22.000] [1
CHNL# 1: [ANGL100060 [MIS GT1 18.000] [1]] [ANGL156661 [DARL G1 22.000] [1
100.00
-100.0
0.0
1.0000
2.0000
3.0000
4.0000
5.0000
6.0000
7.0000
8.0000
9.0000
10.000
TIME (SECONDS)
TUE, JAN 27 2009 15:56
"NE,NY,NB ANGLE"

2013 WINTER PEAK STORA 167, NS LOAD 2371
NS-NB=-200; NB-NE=300; CBX=543; ONI=773 ONS=863
1 PHASE FAULT L6016 AT 120H, BBU ON 120H-622
TRIPS L6016 L6005 IN 14 CYCLES
FILE: c103-120H-622_BBU_nrect-2013WP-NS-import-200.out
CHNL# 59: [POWER199169 [TUFTCV3 14.400] [3]]
CHNL# 56: [POWER199086 [TRENTON613.800] [6]]
CHNL# 55: [POWER199085 [TRENTN5 13.800] [5]]
CHNL# 54: [POWER199061 [TMP1 STO13.800] [1]]
CHNL# 52: [POWER199043 [ACONIG1 20.000] [1]]
CHNL# 50: [POWER199001 [LINGAN1 14.400] [1]]
2.5000
0.0
1.0000
-1.500
0.0
1.0000
2.0000
3.0000
4.0000
5.0000
6.0000
7.0000
8.0000
9.0000
10.000
TIME (SECONDS)
TUE, JAN 27 2009 15:56
NS MW

2013 WINTER PEAK STORA 167, NS LOAD 2371
NS-NB=-200; NB-NE=300; CBX=543; ONI=773 ONS=863
1 PHASE FAULT L6016 AT 120H, BBU ON 120H-622
TRIPS L6016 L6005 IN 14 CYCLES
FILE: c103-120H-622_BBU_nrect-2013WP-NS-import-200.out
CHNL# 49: [POWER190472 [BLLDNG2 19.000] [1]]
CHNL# 45: [POWER190456 [LEPRG1 26.000] [1]]
CHNL# 44: [POWER190450 [MACTG1 13.800] [1]]
CHNL# 42: [POWER126652 [RAV 3 22.000] [1]]
CHNL# 41: [POWER101063 [MYST G7 22.000] [1]]
CHNL# 40: [POWER100060 [MIS GT1 18.000] [1]]
7.0000
2.0000
9.0000
4.0000
5.0000
0.0
6.5000
1.0000
0.0
1.0000
2.0000
3.0000
4.0000
5.0000
6.0000
7.0000
8.0000
9.0000
10.000
TIME (SECONDS)
TUE, JAN 27 2009 15:56
"NE,NY,NB POWER"

NS WIND MV

NS WIND MW

"345KV VOLTAGE"

FREQUENCY HZ

2013 WINTER PEAK STORA 167, NS LOAD 2371
NS-NB=-200; NB-NE=300; CBX=543; ONI=773 ONS=863
1 PHASE FAULT L6016 AT 120H, BBU ON 120H-622
TRIPS L6016 L6005 IN 14 CYCLES
FILE: c103-120H-622_BBU_nrect-2013WP-NS-import-200.out
CHNL# 146: [VOLT199280 [TUSKET A138.00]]
CHNL# 145: [VOLT199193 [HHWAS 138.00]]
CHNL# 144: [VOLT199165 [TUFTCOVE138.00]]
CHNL# 143: [VOLT199138 [SPRNGHILL138.00]]
CHNL# 142: [VOLT199090 [SON-TREN138.00]]
CHNL# 141: [VOLT199051 [HASTINGS138.00]]
1.2000
0.70000
0.0
1.0000
2.0000
3.0000
4.0000
5.0000
6.0000
7.0000
8.0000
9.0000
10.000
TIME (SECONDS)
TUE, JAN 27 2009 15:56
138KV BUS VOLTS

2013 WINTER PEAK STORA 167, NS LOAD 2371
NS-NB=-200; NB-NE=300; CBX=543; ONI=773 ONS=863
1 PHASE FAULT L6016 AT 120H, BBU ON 120H-622
TRIPS L6016 L6005 IN 14 CYCLES
FILE: c103-120H-622_BBU_nrect-2013WP-NS-import-200.out
CHNL# 140: [VOLT199240 [BWATER A230.00]]
CHNL# 139: [VOLT199200 [BRUSHY 230.00]]
CHNL# 138: [VOLT199130 [ONSLOW 230.00]]
CHNL# 137: [VOLT199050 [HASTINGS230.00]]
CHNL# 136: [VOLT199044 [PT.ACONI230.00]]
CHNL# 135: [VOLT199000 [LINGAN 230.00]]
1.2000
0.70000
0.0
1.0000
2.0000
3.0000
4.0000
5.0000
6.0000
7.0000
8.0000
9.0000
10.000
TIME (SECONDS)
TUE, JAN 27 2009 15:56
230KV BUS VOLTS

2013 WINTER PEAK STORA 167, NS LOAD 2371
NS-NB=-200; NB-NE=300; CBX=543; ONI=773 ONS=863
1 PHASE FAULT L6016 AT 120H, BBU ON 120H-622
TRIPS L6016 L6005 IN 14 CYCLES
FILE: c103-120H-622_BBU_nrect-2013WP-NS-import-200.out
CHNL# 217: [L6533MW]
CHNL# 215: [L6503MW]
CHNL# 197: [L8003MW]
CHNL# 195: [L8004MW]
CHNL# 193: [L8001MW]
CHNL# 221: [L3001MW]
250.00
-250.0
500.00
0.0
1000.0
-1000.
0.0
1.0000
2.0000
3.0000
4.0000
5.0000
6.0000
7.0000
8.0000
9.0000
10.000
TIME (SECONDS)
TUE, JAN 27 2009 15:56
LINE FLOW MW

2013 WINTER PEAK STORA 167, NS LOAD 2371
NS-NB=-200; NB-NE=300; CBX=543; ONI=773 ONS=863
1 PHASE FAULT L6016 AT 120H, BBU ON 120H-622
TRIPS L6016 L6005 IN 14 CYCLES
FILE: c103-120H-622_BBU_nrect-2013WP-NS-import-200.out
CHNL# 154: [IR141-DIGBYH69.0 VOLTS]
CHNL# 153: [IR137-STATIG25.0 VOLTS]
CHNL# 152: [IR114-GLENDH138.0 VOLTS]
CHNL# 151: [IR84-DALHOHV230.0 VOLTS]
CHNL# 150: [IR82_NUTBHV69.0 VOLTS]
CHNL# 149: [IR45_AMHERTP138.0 VOLTS]
1.2000
0.70000
0.0
1.0000
2.0000
3.0000
4.0000
5.0000
6.0000
7.0000
8.0000
9.0000
10.000
TIME (SECONDS)
TUE, JAN 27 2009 15:56
WIND BUS VOLTS

2013 WINTER PEAK STORA 167, NS LOAD 2371
NS-NB=-200; NB-NE=300; CBX=543; ONI=773 ONS=863
1 PHASE FAULT L6033 AT 103H, CLEARED 1H IN 6 CY
103H-632 FAILS, BUS B61 CLEARS
FILE: c104-103H-632_BBU_nrect-2013WP-NS-import-200.out
CHNL# 20: [ANGL199169 [TUFTCV3 14.400] [3]] [ANGL156661 [DARL G1 22.000] [1]
CHNL# 17: [ANGL199086 [TRENTON613.800] [6]] [ANGL156661 [DARL G1 22.000] [1]
CHNL# 16: [ANGL199085 [TRENTN5 13.800] [5]] [ANGL156661 [DARL G1 22.000] [1]
CHNL# 15: [ANGL199061 [TMP1 STO13.800] [1]] [ANGL156661 [DARL G1 22.000] [1]
CHNL# 13: [ANGL199043 [ACONIG1 20.000] [1]] [ANGL156661 [DARL G1 22.000] [1]
CHNL# 11: [ANGL199001 [LINGAN1 14.400] [1]] [ANGL156661 [DARL G1 22.000] [1]
TIME (SECONDS)
TUE, JAN 27 2009 15:56
NS ANGLE

2013 WINTER PEAK STORA 167, NS LOAD 2371
NS-NB=-200; NB-NE=300; CBX=543; ONI=773 ONS=863
1 PHASE FAULT L6033 AT 103H, CLEARED 1H IN 6 CY
103H-632 FAILS, BUS B61 CLEARS
FILE: c104-103H-632_BBU_nrect-2013WP-NS-import-200.out
CHNL# 10: [ANGL190472 [BLLDNG2 19.000] [1]] [ANGL156661 [DARL G1 22.000] [1]
CHNL# 6: [ANGL190456 [LEPRG1 26.000] [1]] [ANGL156661 [DARL G1 22.000] [1]
CHNL# 5: [ANGL190450 [MACTG1 13.800] [1]] [ANGL156661 [DARL G1 22.000] [1]
CHNL# 3: [ANGL126652 [RAV 3 22.000] [1]] [ANGL156661 [DARL G1 22.000] [1]
CHNL# 2: [ANGL101063 [MYST G7 22.000] [1]] [ANGL156661 [DARL G1 22.000] [1]
CHNL# 1: [ANGL100060 [MIS GT1 18.000] [1]] [ANGL156661 [DARL G1 22.000] [1]
TIME (SECONDS)
TUE, JAN 27 2009 15:56
"NE,NY,NB ANGLE"

2013 WINTER PEAK STORA 167, NS LOAD 2371
NS-NB=-200; NB-NE=300; CBX=543; ONI=773 ONS=863
1 PHASE FAULT L6033 AT 103H, CLEARED 1H IN 6 CY
103H-632 FAILS, BUS B61 CLEARS
FILE: c104-103H-632_BBU_nrect-2013WP-NS-import-200.out
CHNL# 59: [POWER199169 [TUFTCV3 14.400] [3]]
CHNL# 56: [POWER199086 [TRENTON613.800] [6]]
CHNL# 55: [POWER199085 [TRENTN5 13.800] [5]]
CHNL# 54: [POWER199061 [TMP1 STO13.800] [1]]
CHNL# 52: [POWER199043 [ACONIG1 20.000] [1]]
CHNL# 50: [POWER199001 [LINGAN1 14.400] [1]]
TIME (SECONDS)
TUE, JAN 27 2009 15:56
NS MW

2013 WINTER PEAK STORA 167, NS LOAD 2371
NS-NB=-200; NB-NE=300; CBX=543; ONI=773 ONS=863
1 PHASE FAULT L6033 AT 103H, CLEARED 1H IN 6 CY
103H-632 FAILS, BUS B61 CLEARS
FILE: c104-103H-632_BBU_nrect-2013WP-NS-import-200.out
CHNL# 49: [POWER190472 [BLLDNG2 19.000] [1]]
CHNL# 45: [POWER190456 [LEPRG1 26.000] [1]]
CHNL# 44: [POWER190450 [MACTG1 13.800] [1]]
CHNL# 42: [POWER126652 [RAV 3 22.000] [1]]
CHNL# 41: [POWER101063 [MYST G7 22.000] [1]]
CHNL# 40: [POWER100060 [MIS GT1 18.000] [1]]
TIME (SECONDS)
TUE, JAN 27 2009 15:56
"NE,NY,NB POWER"

2013 WINTER PEAK STORA 167, NS LOAD 2371
NS-NB=-200; NB-NE=300; CBX=543; ONI=773 ONS=863
1 PHASE FAULT L6033 AT 103H, CLEARED 1H IN 6 CY
103H-632 FAILS, BUS B61 CLEARS
FILE: c104-103H-632_BBU_nrect-2013WP-NS-import-200.out
CHNL# 119: [VARS IR141-DIGBY]
CHNL# 118: [VARS IR137-STATIA]
CHNL# 117: [VARS IR114-GLENDHU]
CHNL# 116: [VARS IR84-DALHOUSIE]
CHNL# 115: [VARS IR82_NUTTBY]
CHNL# 114: [VARS IR45_AMHERST]
TIME (SECONDS)
TUE, JAN 27 2009 15:56
NS WIND MV

2013 WINTER PEAK STORA 167, NS LOAD 2371
NS-NB=-200; NB-NE=300; CBX=543; ONI=773 ONS=863
1 PHASE FAULT L6033 AT 103H, CLEARED 1H IN 6 CY
103H-632 FAILS, BUS B61 CLEARS
FILE: c104-103H-632_BBU_nrect-2013WP-NS-import-200.out
CHNL# 79: [POWER IR141-DIGBY]
CHNL# 78: [POWER IR137-STATIA]
CHNL# 77: [POWER IR114-GLENDHU]
CHNL# 76: [POWER IR84-DALHOUSIE]
CHNL# 75: [POWER IR82_NUTTBY]
CHNL# 74: [POWER IR45_AMHERST]
TIME (SECONDS)
TUE, JAN 27 2009 15:56
NS WIND MW

2013 WINTER PEAK STORA 167, NS LOAD 2371
NS-NB=-200; NB-NE=300; CBX=543; ONI=773 ONS=863
1 PHASE FAULT L6033 AT 103H, CLEARED 1H IN 6 CY
103H-632 FAILS, BUS B61 CLEARS
FILE: c104-103H-632_BBU_nrect-2013WP-NS-import-200.out
CHNL# 133: [VOLT199125 [ONSLOW 345.00]]
CHNL# 132: [VOLT199120 [HOPEWELL 345.00]]
CHNL# 131: [VOLT199045 [WOODBINE345.00]]
CHNL# 130: [VOLT190320 [SALBRY 345.00]]
CHNL# 128: [VOLT190004 [KESWICK 345.00]]
CHNL# 127: [VOLT 70002 [ORRINGTN345.00]]
TIME (SECONDS)
TUE, JAN 27 2009 15:56
"345KV VOLTAGE"

2013 WINTER PEAK STORA 167, NS LOAD 2371
NS-NB=-200; NB-NE=300; CBX=543; ONI=773 ONS=863
1 PHASE FAULT L6033 AT 103H, CLEARED 1H IN 6 CY
103H-632 FAILS, BUS B61 CLEARS
FILE: c104-103H-632_BBU_nrect-2013WP-NS-import-200.out
CHNL# 125: 60*(1+[FREQ199125 [ONSLOW 345.00]])
CHNL# 124: 60*(1+[FREQ199120 [HOPEWELL 345.00]])
CHNL# 123: 60*(1+[FREQ199045 [WOODBINE345.00]])
CHNL# 122: 60*(1+[FREQ190320 [SALBRY 345.00]])
CHNL# 121: 60*(1+[FREQ190197 [C.COVE 345.00]])
CHNL# 120: 60*(1+[FREQ 70002 [ORRINGTN345.00]])
TIME (SECONDS)
TUE, JAN 27 2009 15:56
FREQUENCY HZ

2013 WINTER PEAK STORA 167, NS LOAD 2371
NS-NB=-200; NB-NE=300; CBX=543; ONI=773 ONS=863
1 PHASE FAULT L6033 AT 103H, CLEARED 1H IN 6 CY
103H-632 FAILS, BUS B61 CLEARS
FILE: c104-103H-632_BBU_mrect-2013WP-NS-import-200.out
CHNL# 146: [VOLT199280 [TUSKET A138.00]]
CHNL# 145: [VOLT199193 [HHWAS 138.00]]
CHNL# 144: [VOLT199165 [TUFTCOVE138.00]]
CHNL# 143: [VOLT199135 [SPRNGHILL138.00]]
CHNL# 142: [VOLT199090 [SON-TREN138.00]]
CHNL# 141: [VOLT199051 [HASTINGS138.00]]
1.2000
0.70000
0.0
1.0000
2.0000
3.0000
4.0000
5.0000
6.0000
7.0000
8.0000
9.0000
10.000
TIME (SECONDS)
TUE, JAN 27 2009 15:56
138KV BUS VOLTS

2013 WINTER PEAK STORA 167, NS LOAD 2371
NS-NB=-200; NB-NE=300; CBX=543; ONI=773 ONS=863
1 PHASE FAULT L6033 AT 103H, CLEARED 1H IN 6 CY
103H-632 FAILS, BUS B61 CLEARS
FILE: c104-103H-632_BBU_mrect-2013WP-NS-import-200.out
CHNL# 140: [VOLT199240 [BWATER A230.00]]
CHNL# 139: [VOLT199200 [BRUSHY 230.00]]
CHNL# 138: [VOLT199130 [ONSLOW 230.00]]
CHNL# 137: [VOLT199050 [HASTINGS230.00]]
CHNL# 136: [VOLT199044 [PT.ACONI230.00]]
CHNL# 135: [VOLT199000 [LINGAN 230.00]]
1.2000
0.70000
0.0
1.0000
2.0000
3.0000
4.0000
5.0000
6.0000
7.0000
8.0000
9.0000
10.000
TIME (SECONDS)
TUE, JAN 27 2009 15:56
230KV BUS VOLTS

2013 WINTER PEAK STORA 167, NS LOAD 2371
NS-NB=-200; NB-NE=300; CBX=543; ONI=773 ONS=863
1 PHASE FAULT L6033 AT 103H, CLEARED 1H IN 6 CY
103H-632 FAILS, BUS B61 CLEARS
FILE: c104-103H-632_BBU_mrect-2013WP-NS-import-200.out
CHNL# 217: [L6533MW]
CHNL# 215: [L6503MW]
CHNL# 197: [L8003MW]
CHNL# 195: [L8004MW]
CHNL# 193: [L8001MW]
CHNL# 221: [L3001MW]
250.00
500.00
1000.0
0.0
-250.0
-1000.
TIME (SECONDS)
TUE, JAN 27 2009 15:56
LINE FLOW MW

2013 WINTER PEAK STORA 167, NS LOAD 2371
NS-NB=-200; NB-NE=300; CBX=543; ONI=773 ONS=863
1 PHASE FAULT L6033 AT 103H, CLEARED 1H IN 6 CY
103H-632 FAILS, BUS B61 CLEARS
FILE: c104-103H-632_BBU_mrect-2013WP-NS-import-200.out
CHNL# 154: [IR141-DIGBYH69.0 VOLTS]
CHNL# 153: [IR137-STATIG25.0 VOLTS]
CHNL# 152: [IR114-GLENDH138.0 VOLTS]
CHNL# 151: [IR84-DALHOHV230.0 VOLTS]
CHNL# 150: [IR82_NUTBHV69.0 VOLTS]
CHNL# 149: [IR45_AMHERTP138.0 VOLTS]
1.2000
0.70000
0.0
1.0000
2.0000
3.0000
4.0000
5.0000
6.0000
7.0000
8.0000
9.0000
10.000
TIME (SECONDS)
TUE, JAN 27 2009 15:56
WIND BUS VOLTS

2013 WINTER PEAK STORA 167, NS LOAD 2371
NS-NB=-200; NB-NE=300; CBX=543; ONI=773 ONS=863
1 PHASE FAULT L6010 AT 90H, 120H END CLEARED IN 6 CY
BBU ON 90H-608 TRIPS L6005 IN 14 CYCLES
FILE: c105-90H-608_BBU_mrecl-2013WP-NS-import-200.out
CHNL# 20: [ANGL199169 [TUFTCV3 14.400] [3]] [ANGL156661 [DARL G1 22.000] [1
CHNL# 17: [ANGL199086 [TRENTON613.800] [6]] [ANGL156661 [DARL G1 22.000] [1
CHNL# 16: [ANGL199085 [TRENTN5 13.800] [5]] [ANGL156661 [DARL G1 22.000] [1
CHNL# 15: [ANGL199061 [TMP1 STO13.800] [1]] [ANGL156661 [DARL G1 22.000] [1
CHNL# 13: [ANGL199043 [ACONIG1 20.000] [1]] [ANGL156661 [DARL G1 22.000] [1
CHNL# 11: [ANGL199001 [LINGAN1 14.400] [1]] [ANGL156661 [DARL G1 22.000] [1
100.00
-100.0
0.0
1.0000
2.0000
3.0000
4.0000
5.0000
6.0000
7.0000
8.0000
9.0000
10.000
TIME (SECONDS)
TUE, JAN 27 2009 15:56
NS ANGLE

2013 WINTER PEAK STORA 167, NS LOAD 2371
NS-NB=-200; NB-NE=300; CBX=543; ONI=773 ONS=863
1 PHASE FAULT L6010 AT 90H, 120H END CLEARED IN 6 CY
BBU ON 90H-608 TRIPS L6005 IN 14 CYCLES
FILE: c105-90H-608_BBU_mrecl-2013WP-NS-import-200.out
CHNL# 10: [ANGL190472 [BLLDNG2 19.000] [1]] [ANGL156661 [DARL G1 22.000] [1
CHNL# 6: [ANGL190456 [LEPRG1 26.000] [1]] [ANGL156661 [DARL G1 22.000] [1
CHNL# 5: [ANGL190450 [MACTG1 13.800] [1]] [ANGL156661 [DARL G1 22.000] [1
CHNL# 3: [ANGL126652 [RAV 3 22.000] [1]] [ANGL156661 [DARL G1 22.000] [1
CHNL# 2: [ANGL101063 [MYST G7 22.000] [1]] [ANGL156661 [DARL G1 22.000] [1
CHNL# 1: [ANGL100060 [MIS GT1 18.000] [1]] [ANGL156661 [DARL G1 22.000] [1
100.00
-100.0
0.0
1.0000
2.0000
3.0000
4.0000
5.0000
6.0000
7.0000
8.0000
9.0000
10.000
TIME (SECONDS)
TUE, JAN 27 2009 15:56
"NE,NY,NB ANGLE"

2013 WINTER PEAK STORA 167, NS LOAD 2371
NS-NB=-200; NB-NE=300; CBX=543; ONI=773 ONS=863
1 PHASE FAULT L6010 AT 90H, 120H END CLEARED IN 6 CY
BBU ON 90H-608 TRIPS L6005 IN 14 CYCLES
FILE: c105-90H-608_BBU_mrecl-2013WP-NS-import-200.out
CHNL# 59: [POWR199169 [TUFTCV3 14.400] [3]]
CHNL# 56: [POWR199086 [TRENTON613.800] [6]]
CHNL# 55: [POWR199085 [TRENTN5 13.800] [5]]
CHNL# 54: [POWR199061 [TMP1 STO13.800] [1]]
CHNL# 52: [POWR199043 [ACONIG1 20.000] [1]]
CHNL# 50: [POWR199001 [LINGAN1 14.400] [1]]
2.5000
1.0000
-1.500
0.0
0.0
1.0000
2.0000
3.0000
4.0000
5.0000
6.0000
7.0000
8.0000
9.0000
10.000
TIME (SECONDS)
TUE, JAN 27 2009 15:56
NS MW

2013 WINTER PEAK STORA 167, NS LOAD 2371
NS-NB=-200; NB-NE=300; CBX=543; ONI=773 ONS=863
1 PHASE FAULT L6010 AT 90H, 120H END CLEARED IN 6 CY
BBU ON 90H-608 TRIPS L6005 IN 14 CYCLES
FILE: c105-90H-608_BBU_mrecl-2013WP-NS-import-200.out
CHNL# 49: [POWER190472 [BLLDNG2 19.000] [1]]
CHNL# 45: [POWER190456 [LEPRG1 26.000] [1]]
CHNL# 44: [POWER190450 [MACTG1 13.800] [1]]
CHNL# 42: [POWER126652 [RAV 3 22.000] [1]]
CHNL# 41: [POWER101063 [MYST G7 22.000] [1]]
CHNL# 40: [POWER100060 [MIS GT1 18.000] [1]]
7.0000
9.0000
5.0000
5.0000
6.5000
7.0000
4.0000
0.0
0.0
1.0000
2.0000
0.0
1.0000
2.0000
3.0000
4.0000
5.0000
6.0000
7.0000
8.0000
9.0000
10.000
TIME (SECONDS)
TUE, JAN 27 2009 15:56
"NE,NY,NB POWER"

2013 WINTER PEAK STORA 167, NS LOAD 2371
NS-NB=-200; NB-NE=300; CBX=543; ONI=773 ONS=863
1 PHASE FAULT L6010 AT 90H, 120H END CLEARED IN 6 CY
BBU ON 90H-608 TRIPS L6005 IN 14 CYCLES
FILE: c105-90H-608_BBU_mecl-2013WP-NS-import-200.out
CHNL# 119: [VARS IR141-DIGBY]
CHNL# 118: [VARS IR137-STATIA]
CHNL# 117: [VARS IR114-GLENDHU]
CHNL# 116: [VARS IR84-DALHOUSIE]
CHNL# 115: [VARS IR82_NUTTBY]
CHNL# 114: [VARS IR45_AMHERST]
TIME (SECONDS)
TUE, JAN 27 2009 15:56
NS WIND MV

2013 WINTER PEAK STORA 167, NS LOAD 2371
NS-NB=-200; NB-NE=300; CBX=543; ONI=773 ONS=863
1 PHASE FAULT L6010 AT 90H, 120H END CLEARED IN 6 CY
BBU ON 90H-608 TRIPS L6005 IN 14 CYCLES
FILE: c105-90H-608_BBU_mecl-2013WP-NS-import-200.out
CHNL# 79: [POWER IR141-DIGBY]
CHNL# 78: [POWER IR137-STATIA]
CHNL# 77: [POWER IR114-GLENDHU]
CHNL# 76: [POWER IR84-DALHOUSIE]
CHNL# 75: [POWER IR82_NUTTBY]
CHNL# 74: [POWER IR45_AMHERST]
TIME (SECONDS)
TUE, JAN 27 2009 15:56
NS WIND MW

2013 WINTER PEAK STORA 167, NS LOAD 2371
NS-NB=-200; NB-NE=300; CBX=543; ONI=773 ONS=863
1 PHASE FAULT L6010 AT 90H, 120H END CLEARED IN 6 CY
BBU ON 90H-608 TRIPS L6005 IN 14 CYCLES
FILE: c105-90H-608_BBU_mecl-2013WP-NS-import-200.out
CHNL# 133: [VOLT199125 [ONSLOW 345.00]]
CHNL# 132: [VOLT199120 [HOPEWELL 345.00]]
CHNL# 131: [VOLT199045 [WOODBINE345.00]]
CHNL# 130: [VOLT190320 [SALBRY 345.00]]
CHNL# 128: [VOLT190004 [KESWICK 345.00]]
CHNL# 127: [VOLT 70002 [ORRINGTN345.00]]
TIME (SECONDS)
TUE, JAN 27 2009 15:56
"345KV VOLTAGE"

2013 WINTER PEAK STORA 167, NS LOAD 2371
NS-NB=-200; NB-NE=300; CBX=543; ONI=773 ONS=863
1 PHASE FAULT L6010 AT 90H, 120H END CLEARED IN 6 CY
BBU ON 90H-608 TRIPS L6005 IN 14 CYCLES
FILE: c105-90H-608_BBU_mecl-2013WP-NS-import-200.out
CHNL# 125: 60*(1+[FREQ199125 [ONSLOW 345.00]])
CHNL# 124: 60*(1+[FREQ199120 [HOPEWELL 345.00]])
CHNL# 123: 60*(1+[FREQ199045 [WOODBINE345.00]])
CHNL# 122: 60*(1+[FREQ190320 [SALBRY 345.00]])
CHNL# 121: 60*(1+[FREQ190197 [C.COVE 345.00]])
CHNL# 120: 60*(1+[FREQ 70002 [ORRINGTN345.00]])
TIME (SECONDS)
TUE, JAN 27 2009 15:56
FREQUENCY HZ

2013 WINTER PEAK STORA 167, NS LOAD 2371
NS-NB=-200; NB-NE=300; CBX=543; ONI=773 ONS=863
1 PHASE FAULT L6010 AT 90H, 120H END CLEARED IN 6 CY
BBU ON 90H-608 TRIPS L6005 IN 14 CYCLES
FILE: c105-90H-608_BBU_mecl-2013WP-NS-import-200.out
CHNL# 146: [VOLT199280 [TUSKET A138.00]]
CHNL# 145: [VOLT199193 [HHWAS 138.00]]
CHNL# 144: [VOLT199165 [TUFTCOVE138.00]]
CHNL# 143: [VOLT199138 [SPRNGHIL138.00]]
CHNL# 142: [VOLT199090 [SON-TREN138.00]]
CHNL# 141: [VOLT199051 [HASTINGS138.00]]
1.2000
0.70000
0.0
1.0000
2.0000
3.0000
4.0000
5.0000
6.0000
7.0000
8.0000
9.0000
10.000
TIME (SECONDS)
TUE, JAN 27 2009 15:56
138KV BUS VOLTS

2013 WINTER PEAK STORA 167, NS LOAD 2371
NS-NB=-200; NB-NE=300; CBX=543; ONI=773 ONS=863
1 PHASE FAULT L6010 AT 90H, 120H END CLEARED IN 6 CY
BBU ON 90H-608 TRIPS L6005 IN 14 CYCLES
FILE: c105-90H-608_BBU_mecl-2013WP-NS-import-200.out
CHNL# 140: [VOLT199240 [BWATER A230.00]]
CHNL# 139: [VOLT199200 [BRUSHY 230.00]]
CHNL# 138: [VOLT199130 [ONSLOW 230.00]]
CHNL# 137: [VOLT199050 [HASTINGS230.00]]
CHNL# 136: [VOLT199044 [PT.ACONI230.00]]
CHNL# 135: [VOLT199000 [LINGAN 230.00]]
1.2000
0.70000
0.0
1.0000
2.0000
3.0000
4.0000
5.0000
6.0000
7.0000
8.0000
9.0000
10.000
TIME (SECONDS)
TUE, JAN 27 2009 15:56
230KV BUS VOLTS

2013 WINTER PEAK STORA 167, NS LOAD 2371
NS-NB=-200; NB-NE=300; CBX=543; ONI=773 ONS=863
1 PHASE FAULT L6010 AT 90H, 120H END CLEARED IN 6 CY
BBU ON 90H-608 TRIPS L6005 IN 14 CYCLES
FILE: c105-90H-608_BBU_mecl-2013WP-NS-import-200.out
CHNL# 217: [L6533MW]
CHNL# 215: [L6503MW]
CHNL# 197: [L8003MW]
CHNL# 195: [L8004MW]
CHNL# 193: [L8001MW]
CHNL# 221: [L3001MW]
250.00
500.00
1000.0
0.0
-250.0
-1000.
0.0
1.0000
2.0000
3.0000
4.0000
5.0000
6.0000
7.0000
8.0000
9.0000
10.000
TIME (SECONDS)
TUE, JAN 27 2009 15:56
LINE FLOW MW

2013 WINTER PEAK STORA 167, NS LOAD 2371
NS-NB=-200; NB-NE=300; CBX=543; ONI=773 ONS=863
1 PHASE FAULT L6010 AT 90H, 120H END CLEARED IN 6 CY
BBU ON 90H-608 TRIPS L6005 IN 14 CYCLES
FILE: c105-90H-608_BBU_mecl-2013WP-NS-import-200.out
CHNL# 154: [IR141-DIGBYH69.0 VOLTS]
CHNL# 153: [IR137-STATIG25.0 VOLTS]
CHNL# 152: [IR114-GLENDH138.0 VOLTS]
CHNL# 151: [IR84-DALHOHV230.0 VOLTS]
CHNL# 150: [IR82-NUTBHV69.0 VOLTS]
CHNL# 149: [IR45-AMHERTP138.0 VOLTS]
1.2000
0.70000
0.0
1.0000
2.0000
3.0000
4.0000
5.0000
6.0000
7.0000
8.0000
9.0000
10.000
TIME (SECONDS)
TUE, JAN 27 2009 15:56
WIND BUS VOLTS

2013 WINTER PEAK STORA 167, NS LOAD 2371
NS-NB=-200; NB-NE=300; CBX=543; ONI=773 ONS=863
1 PHASE FAULT L6008 AT 90H, 103H END CLEARED IN 6 CY
BBU ON 90H-611 TRIPS L6009 IN 14 CYCLES
FILE: c106-90H-611_BBU_mecl-2013WP-NS-import-200.out
CHNL# 20: [ANGL199169 [TUFTCV3 14.400] [3]] [ANGL156661 [DARL G1 22.000] [1
CHNL# 17: [ANGL199086 [TRENTON613.800] [6]] [ANGL156661 [DARL G1 22.000] [1
CHNL# 16: [ANGL199085 [TRENTN5 13.800] [5]] [ANGL156661 [DARL G1 22.000] [1
CHNL# 15: [ANGL199061 [TMP1 STO13.800] [1]] [ANGL156661 [DARL G1 22.000] [1
CHNL# 13: [ANGL199043 [ACONIG1 20.000] [1]] [ANGL156661 [DARL G1 22.000] [1
CHNL# 11: [ANGL199001 [LINGAN1 14.400] [1]] [ANGL156661 [DARL G1 22.000] [1
TIME (SECONDS)
TUE, JAN 27 2009 15:56
NS ANGLE

2013 WINTER PEAK STORA 167, NS LOAD 2371
NS-NB=-200; NB-NE=300; CBX=543; ONI=773 ONS=863
1 PHASE FAULT L6008 AT 90H, 103H END CLEARED IN 6 CY
BBU ON 90H-611 TRIPS L6009 IN 14 CYCLES
FILE: c106-90H-611_BBU_mecl-2013WP-NS-import-200.out
CHNL# 10: [ANGL190472 [BLLDNG2 19.000] [1]] [ANGL156661 [DARL G1 22.000] [1
CHNL# 6: [ANGL190456 [LEPRG1 26.000] [1]] [ANGL156661 [DARL G1 22.000] [1
CHNL# 5: [ANGL190450 [MACTG1 13.800] [1]] [ANGL156661 [DARL G1 22.000] [1
CHNL# 3: [ANGL126652 [RAV 3 22.000] [1]] [ANGL156661 [DARL G1 22.000] [1
CHNL# 2: [ANGL101063 [MYST G7 22.000] [1]] [ANGL156661 [DARL G1 22.000] [1
CHNL# 1: [ANGL100060 [MIS GT1 18.000] [1]] [ANGL156661 [DARL G1 22.000] [1
TIME (SECONDS)
TUE, JAN 27 2009 15:56
"NE,NY,NB ANGLE"

2013 WINTER PEAK STORA 167, NS LOAD 2371
NS-NB=-200; NB-NE=300; CBX=543; ONI=773 ONS=863
1 PHASE FAULT L6008 AT 90H, 103H END CLEARED IN 6 CY
BBU ON 90H-611 TRIPS L6009 IN 14 CYCLES
FILE: c106-90H-611_BBU_mecl-2013WP-NS-import-200.out
CHNL# 59: [POWR199169 [TUFTCV3 14.400] [3]]
CHNL# 56: [POWR199086 [TRENTON613.800] [6]]
CHNL# 55: [POWR199085 [TRENTN5 13.800] [5]]
CHNL# 54: [POWR199061 [TMP1 STO13.800] [1]]
CHNL# 52: [POWR199043 [ACONIG1 20.000] [1]]
CHNL# 50: [POWR199001 [LINGAN1 14.400] [1]]
TIME (SECONDS)
TUE, JAN 27 2009 15:56
NS MW

2013 WINTER PEAK STORA 167, NS LOAD 2371
NS-NB=-200; NB-NE=300; CBX=543; ONI=773 ONS=863
1 PHASE FAULT L6008 AT 90H, 103H END CLEARED IN 6 CY
BBU ON 90H-611 TRIPS L6009 IN 14 CYCLES
FILE: c106-90H-611_BBU_mecl-2013WP-NS-import-200.out
CHNL# 49: [POWER190472 [BLLDNG2 19.000] [1]]
CHNL# 45: [POWER190456 [LEPRG1 26.000] [1]]
CHNL# 44: [POWER190450 [MACTG1 13.800] [1]]
CHNL# 42: [POWER126652 [RAV 3 22.000] [1]]
CHNL# 41: [POWER101063 [MYST G7 22.000] [1]]
CHNL# 40: [POWER100060 [MIS GT1 18.000] [1]]
TIME (SECONDS)
TUE, JAN 27 2009 15:56
"NE,NY,NB POWER"

2013 WINTER PEAK STORA 167, NS LOAD 2371
NS-NB=-200; NB-NE=300; CBX=543; ONI=773 ONS=863
1 PHASE FAULT L6008 AT 90H, 103H END CLEARED IN 6 CY
BBU ON 90H-611 TRIPS L6009 IN 14 CYCLES
FILE: c106-90H-611_BBU_mecl-2013WP-NS-import-200.out
CHNL# 119: [VARS IR141-DIGBY]
CHNL# 118: [VARS IR137-STATIA]
CHNL# 117: [VARS IR114-GLENDHU]
CHNL# 116: [VARS IR84-DALHOUSIE]
CHNL# 115: [VARS IR82_NUTTBY]
CHNL# 114: [VARS IR45_AMHERST]
TIME (SECONDS)
TUE, JAN 27 2009 15:56
NS WIND MV

2013 WINTER PEAK STORA 167, NS LOAD 2371
NS-NB=-200; NB-NE=300; CBX=543; ONI=773 ONS=863
1 PHASE FAULT L6008 AT 90H, 103H END CLEARED IN 6 CY
BBU ON 90H-611 TRIPS L6009 IN 14 CYCLES
FILE: c106-90H-611_BBU_mecl-2013WP-NS-import-200.out
CHNL# 79: [POWER IR141-DIGBY]
CHNL# 78: [POWER IR137-STATIA]
CHNL# 77: [POWER IR114-GLENDHU]
CHNL# 76: [POWER IR84-DALHOUSIE]
CHNL# 75: [POWER IR82_NUTTBY]
CHNL# 74: [POWER IR45_AMHERST]
TIME (SECONDS)
TUE, JAN 27 2009 15:56
NS WIND MW

2013 WINTER PEAK STORA 167, NS LOAD 2371
NS-NB=-200; NB-NE=300; CBX=543; ONI=773 ONS=863
1 PHASE FAULT L6008 AT 90H, 103H END CLEARED IN 6 CY
BBU ON 90H-611 TRIPS L6009 IN 14 CYCLES
FILE: c106-90H-611_BBU_mecl-2013WP-NS-import-200.out
CHNL# 133: [VOLT199125 [ONSLOW 345.00]]
CHNL# 132: [VOLT199120 [HOPEWELL 345.00]]
CHNL# 131: [VOLT199045 [WOODBINE345.00]]
CHNL# 130: [VOLT190320 [SALBRY 345.00]]
CHNL# 128: [VOLT190004 [KESWICK 345.00]]
CHNL# 127: [VOLT 70002 [ORRINGTN345.00]]
TIME (SECONDS)
TUE, JAN 27 2009 15:56
"345KV VOLTAGE"

2013 WINTER PEAK STORA 167, NS LOAD 2371
NS-NB=-200; NB-NE=300; CBX=543; ONI=773 ONS=863
1 PHASE FAULT L6008 AT 90H, 103H END CLEARED IN 6 CY
BBU ON 90H-611 TRIPS L6009 IN 14 CYCLES
FILE: c106-90H-611_BBU_mecl-2013WP-NS-import-200.out
CHNL# 125: 60*(1+[FREQ199125 [ONSLOW 345.00]])
CHNL# 124: 60*(1+[FREQ199120 [HOPEWELL 345.00]])
CHNL# 123: 60*(1+[FREQ199045 [WOODBINE345.00]])
CHNL# 122: 60*(1+[FREQ190320 [SALBRY 345.00]])
CHNL# 121: 60*(1+[FREQ190197 [C.COVE 345.00]])
CHNL# 120: 60*(1+[FREQ 70002 [ORRINGTN345.00]])
TIME (SECONDS)
TUE, JAN 27 2009 15:56
FREQUENCY HZ

2013 WINTER PEAK STORA 167, NS LOAD 2371
NS-NB=-200; NB-NE=300; CBX=543; ONI=773 ONS=863
1 PHASE FAULT L6008 AT 90H, 103H END CLEARED IN 6 CY
BBU ON 90H-611 TRIPS L6009 IN 14 CYCLES
FILE: c106-90H-611_BBU_mecl-2013WP-NS-import-200.out
CHNL# 146: [VOLT199280 [TUSKET A138.00]]
CHNL# 145: [VOLT199193 [HHWAS 138.00]]
CHNL# 144: [VOLT199165 [TUFTCOVE138.00]]
CHNL# 143: [VOLT199135 [SPRNGHLL138.00]]
CHNL# 142: [VOLT199090 [SON-TREN138.00]]
CHNL# 141: [VOLT199051 [HASTINGS138.00]]
1.2000
0.70000
0.0
1.0000
2.0000
3.0000
4.0000
5.0000
6.0000
7.0000
8.0000
9.0000
10.000
TIME (SECONDS)
TUE, JAN 27 2009 15:56
138KV BUS VOLTS

2013 WINTER PEAK STORA 167, NS LOAD 2371
NS-NB=-200; NB-NE=300; CBX=543; ONI=773 ONS=863
1 PHASE FAULT L6008 AT 90H, 103H END CLEARED IN 6 CY
BBU ON 90H-611 TRIPS L6009 IN 14 CYCLES
FILE: c106-90H-611_BBU_mecl-2013WP-NS-import-200.out
CHNL# 140: [VOLT199240 [BWATER A230.00]]
CHNL# 139: [VOLT199200 [BRUSHY 230.00]]
CHNL# 138: [VOLT199130 [ONSLOW 230.00]]
CHNL# 137: [VOLT199050 [HASTINGS230.00]]
CHNL# 136: [VOLT199044 [PT.ACONI230.00]]
CHNL# 135: [VOLT199000 [LINGAN 230.00]]
1.2000
0.70000
0.0
1.0000
2.0000
3.0000
4.0000
5.0000
6.0000
7.0000
8.0000
9.0000
10.000
TIME (SECONDS)
TUE, JAN 27 2009 15:56
230KV BUS VOLTS

2013 WINTER PEAK STORA 167, NS LOAD 2371
NS-NB=-200; NB-NE=300; CBX=543; ONI=773 ONS=863
1 PHASE FAULT L6008 AT 90H, 103H END CLEARED IN 6 CY
BBU ON 90H-611 TRIPS L6009 IN 14 CYCLES
FILE: c106-90H-611_BBU_mecl-2013WP-NS-import-200.out
CHNL# 217: [L6533MW]
CHNL# 215: [L6503MW]
CHNL# 197: [L8003MW]
CHNL# 195: [L8004MW]
CHNL# 193: [L8001MW]
CHNL# 221: [L3001MW]
250.00
-250.0
500.00
0.0
1000.0
-1000.
0.0
1.0000
2.0000
3.0000
4.0000
5.0000
6.0000
7.0000
8.0000
9.0000
10.000
TIME (SECONDS)
TUE, JAN 27 2009 15:56
LINE FLOW MW

2013 WINTER PEAK STORA 167, NS LOAD 2371
NS-NB=-200; NB-NE=300; CBX=543; ONI=773 ONS=863
1 PHASE FAULT L6008 AT 90H, 103H END CLEARED IN 6 CY
BBU ON 90H-611 TRIPS L6009 IN 14 CYCLES
FILE: c106-90H-611_BBU_mecl-2013WP-NS-import-200.out
CHNL# 154: [IR141-DIGBYH69.0 VOLTS]
CHNL# 153: [IR137-STATIG25.0 VOLTS]
CHNL# 152: [IR114-GLENDH138.0 VOLTS]
CHNL# 151: [IR84-DALHOHV230.0 VOLTS]
CHNL# 150: [IR82-NUTBHV69.0 VOLTS]
CHNL# 149: [IR45-AMHERTP138.0 VOLTS]
1.2000
0.70000
0.0
1.0000
2.0000
3.0000
4.0000
5.0000
6.0000
7.0000
8.0000
9.0000
10.000
TIME (SECONDS)
TUE, JAN 27 2009 15:56
WIND BUS VOLTS

2013 WINTER PEAK STORA 167, NS LOAD 2371
NS-NB=-200; NB-NE=300; CBX=543; ONI=773 ONS=863
1 PHASE FAULT L6518 AT 47C, 2C END CLEARED IN 6 CY
BBU ON 47C-601 TRIPS TMP-1 IN 14 CYCLES
FILE: c107-47C-601_BBU_nrecl-2013WP-NS-import-200.out
CHNL# 20: [ANGL199169 [TUFTCV3 14.400] [3]] [ANGL156661 [DARL G1 22.000] [1
CHNL# 17: [ANGL199086 [TRENTON6613.800] [6]] [ANGL156661 [DARL G1 22.000] [1
CHNL# 16: [ANGL199085 [TRENTN5 13.800] [5]] [ANGL156661 [DARL G1 22.000] [1
CHNL# 15: [ANGL199061 [TMP1 STO13.800] [1]] [ANGL156661 [DARL G1 22.000] [1
CHNL# 13: [ANGL199043 [ACONIG1 20.000] [1]] [ANGL156661 [DARL G1 22.000] [1
CHNL# 11: [ANGAN1 14.400] [1]] [ANGL156661 [DARL G1 22.000] [1
TIME (SECONDS)
TUE, JAN 27 2009 15:56
NS ANGLE

2013 WINTER PEAK STORA 167, NS LOAD 2371
NS-NB=-200; NB-NE=300; CBX=543; ONI=773 ONS=863
1 PHASE FAULT L6518 AT 47C, 2C END CLEARED IN 6 CY
BBU ON 47C-601 TRIPS TMP-1 IN 14 CYCLES
FILE: c107-47C-601_BBU_nrecl-2013WP-NS-import-200.out
CHNL# 10: [ANGL190472 [BLLDNG2 19.000] [1]] [ANGL156661 [DARL G1 22.000] [1
CHNL# 6: [ANGL190456 [LEPRG1 26.000] [1]] [ANGL156661 [DARL G1 22.000] [1
CHNL# 5: [ANGL190450 [MACTG1 13.800] [1]] [ANGL156661 [DARL G1 22.000] [1
CHNL# 3: [ANGL126652 [RAV 3 22.000] [1]] [ANGL156661 [DARL G1 22.000] [1
CHNL# 2: [ANGL101063 [MYST G7 22.000] [1]] [ANGL156661 [DARL G1 22.000] [1
CHNL# 1: [ANGL100060 [MIS GT1 18.000] [1]] [ANGL156661 [DARL G1 22.000] [1
TIME (SECONDS)
TUE, JAN 27 2009 15:56
"NE,NY,NB ANGLE"

2013 WINTER PEAK STORA 167, NS LOAD 2371
NS-NB=-200; NB-NE=300; CBX=543; ONI=773 ONS=863
1 PHASE FAULT L6518 AT 47C, 2C END CLEARED IN 6 CY
BBU ON 47C-601 TRIPS TMP-1 IN 14 CYCLES
FILE: c107-47C-601_BBU_nrecl-2013WP-NS-import-200.out
CHNL# 59: [POWR199169 [TUFTCV3 14.400] [3]]
CHNL# 56: [POWR199086 [TRENTON6613.800] [6]]
CHNL# 55: [POWR199085 [TRENTN5 13.800] [5]]
CHNL# 54: [POWR199061 [TMP1 STO13.800] [1]]
CHNL# 52: [POWR199043 [ACONIG1 20.000] [1]]
CHNL# 50: [POWR199001 [LINGAN1 14.400] [1]]
TIME (SECONDS)
TUE, JAN 27 2009 15:56
NS MW

2013 WINTER PEAK STORA 167, NS LOAD 2371
NS-NB=-200; NB-NE=300; CBX=543; ONI=773 ONS=863
1 PHASE FAULT L6518 AT 47C, 2C END CLEARED IN 6 CY
BBU ON 47C-601 TRIPS TMP-1 IN 14 CYCLES
FILE: c107-47C-601_BBU_nrecl-2013WP-NS-import-200.out
CHNL# 49: [POWER190472 [BLLDNG2 19.000] [1]]
CHNL# 45: [POWER190456 [LEPRG1 26.000] [1]]
CHNL# 44: [POWER190450 [MACTG1 13.800] [1]]
CHNL# 42: [POWER126652 [RAV 3 22.000] [1]]
CHNL# 41: [POWER101063 [MYST G7 22.000] [1]]
CHNL# 40: [POWER100060 [MIS GT1 18.000] [1]]
TIME (SECONDS)
TUE, JAN 27 2009 15:56
"NE,NY,NB POWER"

2013 WINTER PEAK STORA 167, NS LOAD 2371
NS-NB=-200; NB-NE=300; CBX=543; ONI=773 ONS=863
1 PHASE FAULT L6518 AT 47C, 2C END CLEARED IN 6 CY
BBU ON 47C-601 TRIPS TMP-1 IN 14 CYCLES
FILE: c107-47C-601_BBU_nrecl-2013WP-NS-import-200.out
CHNL# 119: [VARS IR141-DIGBY]
CHNL# 118: [VARS IR137-STATIA]
CHNL# 117: [VARS IR114-GLENDHU]
CHNL# 116: [VARS IR84-DALHOUSIE]
CHNL# 115: [VARS IR82_NUTTBY]
CHNL# 114: [VARS IR45_AMHERST]
TIME (SECONDS)
TUE, JAN 27 2009 15:56
NS WIND MV

2013 WINTER PEAK STORA 167, NS LOAD 2371
NS-NB=-200; NB-NE=300; CBX=543; ONI=773 ONS=863
1 PHASE FAULT L6518 AT 47C, 2C END CLEARED IN 6 CY
BBU ON 47C-601 TRIPS TMP-1 IN 14 CYCLES
FILE: c107-47C-601_BBU_nrecl-2013WP-NS-import-200.out
CHNL# 79: [POWER IR141-DIGBY]
CHNL# 78: [POWER IR137-STATIA]
CHNL# 77: [POWER IR114-GLENDHU]
CHNL# 76: [POWER IR84-DALHOUSIE]
CHNL# 75: [POWER IR82_NUTTBY]
CHNL# 74: [POWER IR45_AMHERST]
TIME (SECONDS)
TUE, JAN 27 2009 15:56
NS WIND MW

2013 WINTER PEAK STORA 167, NS LOAD 2371
NS-NB=-200; NB-NE=300; CBX=543; ONI=773 ONS=863
1 PHASE FAULT L6518 AT 47C, 2C END CLEARED IN 6 CY
BBU ON 47C-601 TRIPS TMP-1 IN 14 CYCLES
FILE: c107-47C-601_BBU_nrecl-2013WP-NS-import-200.out
CHNL# 133: [VOLT199125 [ONSLOW 345.00]]
CHNL# 132: [VOLT199120 [HOPEWELL 345.00]]
CHNL# 131: [VOLT199045 [WOODBINE345.00]]
CHNL# 130: [VOLT190320 [SALBRY 345.00]]
CHNL# 128: [VOLT190004 [KESWICK 345.00]]
CHNL# 127: [VOLT 70002 [ORRINGTN345.00]]
TIME (SECONDS)
TUE, JAN 27 2009 15:56
"345KV VOLTAGE"

2013 WINTER PEAK STORA 167, NS LOAD 2371
NS-NB=-200; NB-NE=300; CBX=543; ONI=773 ONS=863
1 PHASE FAULT L6518 AT 47C, 2C END CLEARED IN 6 CY
BBU ON 47C-601 TRIPS TMP-1 IN 14 CYCLES
FILE: c107-47C-601_BBU_nrecl-2013WP-NS-import-200.out
CHNL# 125: 60*(1+[FREQ199125 [ONSLOW 345.00]])
CHNL# 124: 60*(1+[FREQ199120 [HOPEWELL 345.00]])
CHNL# 123: 60*(1+[FREQ199045 [WOODBINE345.00]])
CHNL# 122: 60*(1+[FREQ190320 [SALBRY 345.00]])
CHNL# 121: 60*(1+[FREQ190197 [C.COVE 345.00]])
CHNL# 120: 60*(1+[FREQ 70002 [ORRINGTN345.00]])
TIME (SECONDS)
TUE, JAN 27 2009 15:56
FREQUENCY HZ

2013 WINTER PEAK STORA 167, NS LOAD 2371
NS-NB=-200; NB-NE=300; CBX=543; ONI=773 ONS=863
1 PHASE FAULT L6518 AT 47C, 2C END CLEARED IN 6 CY
BBU ON 47C-601 TRIPS TMP-1 IN 14 CYCLES
FILE: c107-47C-601_BBU_nrecl-2013WP-NS-import-200.out
CHNL# 146: [VOLT199280 [TUSKET A138.00]]
CHNL# 145: [VOLT199193 [HHWAS 138.00]]
CHNL# 144: [VOLT199165 [TUFTCOVE138.00]]
CHNL# 143: [VOLT199138: [SPRNGHILL138.00]]
CHNL# 142: [VOLT199090 [SON-TREN138.00]]
CHNL# 141: [VOLT199051 [HASTINGS138.00]]
TIME (SECONDS)
TUE, JAN 27 2009 15:56
138KV BUS VOLTS

2013 WINTER PEAK STORA 167, NS LOAD 2371
NS-NB=-200; NB-NE=300; CBX=543; ONI=773 ONS=863
1 PHASE FAULT L6518 AT 47C, 2C END CLEARED IN 6 CY
BBU ON 47C-601 TRIPS TMP-1 IN 14 CYCLES
FILE: c107-47C-601_BBU_nrecl-2013WP-NS-import-200.out
CHNL# 140: [VOLT199240 [BWATER A230.00]]
CHNL# 139: [VOLT199200 [BRUSHY 230.00]]
CHNL# 138: [VOLT199130 [ONSLOW 230.00]]
CHNL# 137: [VOLT199050 [HASTINGS230.00]]
CHNL# 136: [VOLT199044 [PT.ACONI230.00]]
CHNL# 135: [VOLT199000 [LINGAN 230.00]]
TIME (SECONDS)
TUE, JAN 27 2009 15:56
230KV BUS VOLTS

2013 WINTER PEAK STORA 167, NS LOAD 2371
NS-NB=-200; NB-NE=300; CBX=543; ONI=773 ONS=863
1 PHASE FAULT L6518 AT 47C, 2C END CLEARED IN 6 CY
BBU ON 47C-601 TRIPS TMP-1 IN 14 CYCLES
FILE: c107-47C-601_BBU_nrecl-2013WP-NS-import-200.out
CHNL# 217: [L6533MW]
CHNL# 215: [L6503MW]
CHNL# 197: [L8003MW]
CHNL# 195: [L8004MW]
CHNL# 193: [L8001MW]
CHNL# 221: [L3001MW]
TIME (SECONDS)
TUE, JAN 27 2009 15:56
LINE FLOW MW

2013 WINTER PEAK STORA 167, NS LOAD 2371
NS-NB=-200; NB-NE=300; CBX=543; ONI=773 ONS=863
1 PHASE FAULT L6518 AT 47C, 2C END CLEARED IN 6 CY
BBU ON 47C-601 TRIPS TMP-1 IN 14 CYCLES
FILE: c107-47C-601_BBU_nrecl-2013WP-NS-import-200.out
CHNL# 154: [IR141-DIGBYH69.0 VOLTS]
CHNL# 153: [IR137-STATIG25.0 VOLTS]
CHNL# 152: [IR114-GLENDH138.0 VOLTS]
CHNL# 151: [IR84-DALHOHV230.0 VOLTS]
CHNL# 150: [IR82 NUTBHV69.0 VOLTS]
CHNL# 149: [IR45 AMHERTP138.0 VOLTS]
TIME (SECONDS)
TUE, JAN 27 2009 15:56
WIND BUS VOLTS

2013 WINTER PEAK STORA 167, NS LOAD 2371
NS-NB=-200; NB-NE=300; CBX=543; ONI=773 ONS=863
1 PHASE FAULT ON L5041 AT 91H OPENS FROM 99H IN 9 CYCLE
91H-523 BREAKER FAILS NO BBU INSTALLED; ALL GENS ON
FILE: c108a-91H-523_BBU_nrect-2013WP-NS-import-200.out
CHNL# 20: [ANGL199169 [TUFTCV3 14.400] [3]] [ANGL156661 [DARL G1 22.000] [1]
CHNL# 17: [ANGL199086 [TRENTON613.800] [6]] [ANGL156661 [DARL G1 22.000] [1]
CHNL# 16: [ANGL199085 [TRENTN5 13.800] [5]] [ANGL156661 [DARL G1 22.000] [1]
CHNL# 15: [ANGL199061 [TMP1 STO13.800] [1]] [ANGL156661 [DARL G1 22.000] [1]
CHNL# 13: [ANGL199043 [ACONIG1 20.000] [1]] [ANGL156661 [DARL G1 22.000] [1]
CHNL# 11: [ANGL199001 [LINGAN1 14.400] [1]] [ANGL156661 [DARL G1 22.000] [1]
100.00
-100.0
50.000
-150.0
0.0
1.0000
2.0000
3.0000
4.0000
5.0000
6.0000
7.0000
8.0000
9.0000
10.000
TIME (SECONDS)
TUE, JAN 27 2009 15:56
NS ANGLE

2013 WINTER PEAK STORA 167, NS LOAD 2371
NS-NB=-200; NB-NE=300; CBX=543; ONI=773 ONS=863
1 PHASE FAULT ON L5041 AT 91H OPENS FROM 99H IN 9 CYCLE
91H-523 BREAKER FAILS NO BBU INSTALLED; ALL GENS ON
FILE: c108a-91H-523_BBU_nrect-2013WP-NS-import-200.out
CHNL# 10: [ANGL190472 [BLLDNG2 19.000] [1]] [ANGL156661 [DARL G1 22.000] [1]
CHNL# 6: [ANGL190456 [LEPRG1 26.000] [1]] [ANGL156661 [DARL G1 22.000] [1]
CHNL# 5: [ANGL190450 [MACTG1 13.800] [1]] [ANGL156661 [DARL G1 22.000] [1]
CHNL# 3: [ANGL126652 [RAV 3 22.000] [1]] [ANGL156661 [DARL G1 22.000] [1]
CHNL# 2: [ANGL101063 [MYST G7 22.000] [1]] [ANGL156661 [DARL G1 22.000] [1]
CHNL# 1: [ANGL100060 [MIS GT1 18.000] [1]] [ANGL156661 [DARL G1 22.000] [1]
100.00
-100.0
0.0
1.0000
2.0000
3.0000
4.0000
5.0000
6.0000
7.0000
8.0000
9.0000
10.000
TIME (SECONDS)
TUE, JAN 27 2009 15:56
"NE,NY,NB ANGLE"

2013 WINTER PEAK STORA 167, NS LOAD 2371
NS-NB=-200; NB-NE=300; CBX=543; ONI=773 ONS=863
1 PHASE FAULT ON L5041 AT 91H OPENS FROM 99H IN 9 CYCLE
91H-523 BREAKER FAILS NO BBU INSTALLED; ALL GENS ON
FILE: c108a-91H-523_BBU_nrect-2013WP-NS-import-200.out
CHNL# 59: [POWR199169 [TUFTCV3 14.400] [3]]
CHNL# 56: [POWR199086 [TRENTON613.800] [6]]
CHNL# 55: [POWR199085 [TRENTN5 13.800] [5]]
CHNL# 54: [POWR199061 [TMP1 STO13.800] [1]]
CHNL# 52: [POWR199043 [ACONIG1 20.000] [1]]
CHNL# 50: [POWR199001 [LINGAN1 14.400] [1]]
2.5000
0.0
1.0000
-1.500
2.0000
3.0000
4.0000
5.0000
6.0000
7.0000
8.0000
9.0000
10.000
TIME (SECONDS)
TUE, JAN 27 2009 15:56
NS MW

2013 WINTER PEAK STORA 167, NS LOAD 2371
NS-NB=-200; NB-NE=300; CBX=543; ONI=773 ONS=863
1 PHASE FAULT ON L5041 AT 91H OPENS FROM 99H IN 9 CYCLE
91H-523 BREAKER FAILS NO BBU INSTALLED; ALL GENS ON
FILE: c108a-91H-523_BBU_nrect-2013WP-NS-import-200.out
CHNL# 49: [POWER190472 [BLLDNG2 19.000] [1]]
CHNL# 45: [POWER190456 [LEPRG1 26.000] [1]]
CHNL# 44: [POWER190450 [MACTG1 13.800] [1]]
CHNL# 42: [POWER126652 [RAV 3 22.000] [1]]
CHNL# 41: [POWER101063 [MYST G7 22.000] [1]]
CHNL# 40: [POWER100060 [MIS GT1 18.000] [1]]
7.0000
2.0000
9.0000
4.0000
5.0000
0.0
6.5000
1.0000
1.0000
2.0000
3.0000
4.0000
5.0000
6.0000
7.0000
8.0000
9.0000
10.000
TIME (SECONDS)
TUE, JAN 27 2009 15:56
"NE,NY,NB POWER"

2013 WINTER PEAK STORA 167, NS LOAD 2371
NS-NB=-200; NB-NE=300; CBX=543; ONI=773 ONS=863
1 PHASE FAULT ON L5041 AT 91H OPENS FROM 99H IN 9 CYCLE
91H-523 BREAKER FAILS NO BBU INSTALLED; ALL GENS ON
FILE: c108a-91H-523_BBU_mrect-2013WP-NS-import-200.out
CHNL# 119: [VARS IR141-DIGBY]
CHNL# 114: [VARS IR45_AMHERST]
CHNL# 115: [VARS IR82_NUTTBY]
CHNL# 116: [VARS IR84-DALHOUSIE]
CHNL# 117: [VARS IR114-GLENDHU]
CHNL# 118: [VARS IR137-STATIA]
0.50000
-0.5000
0.0
1.0000
2.0000
3.0000
4.0000
5.0000
6.0000
7.0000
8.0000
9.0000
10.000
TIME (SECONDS)
TUE, JAN 27 2009 15:56
NS WIND MV

2013 WINTER PEAK STORA 167, NS LOAD 2371
NS-NB=-200; NB-NE=300; CBX=543; ONI=773 ONS=863
1 PHASE FAULT ON L5041 AT 91H OPENS FROM 99H IN 9 CYCLE
91H-523 BREAKER FAILS NO BBU INSTALLED; ALL GENS ON
FILE: c108a-91H-523_BBU_mrect-2013WP-NS-import-200.out
CHNL# 74: [POWER IR45_AMHERST]
CHNL# 75: [POWER IR82_NUTTBY]
CHNL# 76: [POWER IR84-DALHOUSIE]
CHNL# 77: [POWER IR114-GLENDHU]
CHNL# 78: [POWER IR137-STATIA]
CHNL# 79: [POWER IR141-DIGBY]
1.0000
0.0
0.0
1.0000
2.0000
3.0000
4.0000
5.0000
6.0000
7.0000
8.0000
9.0000
10.000
TIME (SECONDS)
TUE, JAN 27 2009 15:56
NS WIND MW

2013 WINTER PEAK STORA 167, NS LOAD 2371
NS-NB=-200; NB-NE=300; CBX=543; ONI=773 ONS=863
1 PHASE FAULT ON L5041 AT 91H OPENS FROM 99H IN 9 CYCLE
91H-523 BREAKER FAILS NO BBU INSTALLED; ALL GENS ON
FILE: c108a-91H-523_BBU_mrect-2013WP-NS-import-200.out
CHNL# 127: [VOLT 70002 [ORRINGTN345.00]]
CHNL# 128: [VOLT190004 [KESWICK 345.00]]
CHNL# 130: [VOLT190320 [SALBRY 345.00]]
CHNL# 131: [VOLT199045 [WOODBINE345.00]]
CHNL# 132: [VOLT199120 [HOPEWELL345.00]]
CHNL# 133: [VOLT199125 [ONSLOW 345.00]]
1.1000
0.90000
1.0000
2.0000
3.0000
4.0000
5.0000
6.0000
7.0000
8.0000
9.0000
10.000
TIME (SECONDS)
TUE, JAN 27 2009 15:56
"345KV VOLTAGE"

2013 WINTER PEAK STORA 167, NS LOAD 2371
NS-NB=-200; NB-NE=300; CBX=543; ONI=773 ONS=863
1 PHASE FAULT ON L5041 AT 91H OPENS FROM 99H IN 9 CYCLE
91H-523 BREAKER FAILS NO BBU INSTALLED; ALL GENS ON
FILE: c108a-91H-523_BBU_mrect-2013WP-NS-import-200.out
CHNL# 120: 60*(1+[FREQ 70002 [ORRINGTN345.00]])
CHNL# 121: 60*(1+[FREQ190197 [C.COVE 345.00]])
CHNL# 122: 60*(1+[FREQ190320 [SALBRY 345.00]])
CHNL# 123: 60*(1+[FREQ199045 [WOODBINE345.00]])
CHNL# 124: 60*(1+[FREQ199120 [HOPEWELL345.00]])
CHNL# 125: 60*(1+[FREQ199125 [ONSLOW 345.00]])
60.500
59.500
1.0000
2.0000
3.0000
4.0000
5.0000
6.0000
7.0000
8.0000
9.0000
10.000
TIME (SECONDS)
TUE, JAN 27 2009 15:56
FREQUENCY HZ

2013 WINTER PEAK STORA 167, NS LOAD 2371
NS-NB=-200; NB-NE=300; CBX=543; ONI=773 ONS=863
1 PHASE FAULT ON L5041 AT 91H OPENS FROM 99H IN 9 CYCLE
91H-523 BREAKER FAILS NO BBU INSTALLED; ALL GENS ON
FILE: c108a-91H-523_BBU_mrect-2013WP-NS-import-200.out
CHNL# 146: [VOLT199280 [TUSKET A138.00]]
CHNL# 145: [VOLT199193 [HHWAS 138.00]]
CHNL# 144: [VOLT199165 [TUFTCOVE138.00]]
CHNL# 143: [VOLT199135 [SPRNGHIL138.00]]
CHNL# 142: [VOLT199090 [50N-TREN138.00]]
CHNL# 141: [VOLT199051 [HASTINGS138.00]]
1.2000
0.70000
0.0
1.0000
2.0000
3.0000
4.0000
5.0000
6.0000
7.0000
8.0000
9.0000
10.000
TIME (SECONDS)
TUE, JAN 27 2009 15:56
138KV BUS VOLTS

2013 WINTER PEAK STORA 167, NS LOAD 2371
NS-NB=-200; NB-NE=300; CBX=543; ONI=773 ONS=863
1 PHASE FAULT ON L5041 AT 91H OPENS FROM 99H IN 9 CYCLE
91H-523 BREAKER FAILS NO BBU INSTALLED; ALL GENS ON
FILE: c108a-91H-523_BBU_mrect-2013WP-NS-import-200.out
CHNL# 140: [VOLT199240 [BWATER A230.00]]
CHNL# 139: [VOLT199200 [BRUSHY 230.00]]
CHNL# 138: [VOLT199130 [ONSLOW 230.00]]
CHNL# 137: [VOLT199050 [HASTINGS230.00]]
CHNL# 136: [VOLT199044 [PT.ACONI230.00]]
CHNL# 135: [VOLT199000 [LINGAN 230.00]]
1.2000
0.70000
0.0
1.0000
2.0000
3.0000
4.0000
5.0000
6.0000
7.0000
8.0000
9.0000
10.000
TIME (SECONDS)
TUE, JAN 27 2009 15:56
230KV BUS VOLTS

2013 WINTER PEAK STORA 167, NS LOAD 2371
NS-NB=-200; NB-NE=300; CBX=543; ONI=773 ONS=863
1 PHASE FAULT ON L5041 AT 91H OPENS FROM 99H IN 9 CYCLE
91H-523 BREAKER FAILS NO BBU INSTALLED; ALL GENS ON
FILE: c108a-91H-523_BBU_mrect-2013WP-NS-import-200.out
CHNL# 217: [L6533MW]
CHNL# 215: [L6503MW]
CHNL# 197: [L8003MW]
CHNL# 195: [L8004MW]
CHNL# 193: [L8001MW]
CHNL# 221: [L3001MW]
250.00
-250.0
500.00
0.0
1000.0
-1000.
0.0
1.0000
2.0000
3.0000
4.0000
5.0000
6.0000
7.0000
8.0000
9.0000
10.000
TIME (SECONDS)
TUE, JAN 27 2009 15:56
LINE FLOW MW

2013 WINTER PEAK STORA 167, NS LOAD 2371
NS-NB=-200; NB-NE=300; CBX=543; ONI=773 ONS=863
1 PHASE FAULT ON L5041 AT 91H OPENS FROM 99H IN 9 CYCLE
91H-523 BREAKER FAILS NO BBU INSTALLED; ALL GENS ON
FILE: c108a-91H-523_BBU_mrect-2013WP-NS-import-200.out
CHNL# 154: [IR141-DIGBYH69.0 VOLTS]
CHNL# 153: [IR137-STATIG25.0 VOLTS]
CHNL# 152: [IR114-GLENDH138.0 VOLTS]
CHNL# 151: [IR84-DALHOHV230.0 VOLTS]
CHNL# 150: [IR82 NUTBHV69.0 VOLTS]
CHNL# 149: [IR45 AMHERTP138.0 VOLTS]
1.2000
0.70000
0.0
1.0000
2.0000
3.0000
4.0000
5.0000
6.0000
7.0000
8.0000
9.0000
10.000
TIME (SECONDS)
TUE, JAN 27 2009 15:56
WIND BUS VOLTS

2013 WINTER PEAK STORA 167, NS LOAD 2371
NS-NB=-200; NB-NE=300; CBX=543; ONI=773 ONS=863
1 PHASE FAULT ON L5041 AT 91H OPENS FROM 99H IN 9 CYCLE
91H-523 BREAKER FAILS NO BBU INSTALLED; TC 1 OFF
FILE: c108b-91H-523_BBU_nrect-2013WP-NS-import-200.out
CHNL# 20: [ANGL199169 [TUFTCV3 14.400] [3]] [ANGL156661 [DARL G1 22.000] [1]
CHNL# 17: [ANGL199086 [TRENTON613.800] [6]] [ANGL156661 [DARL G1 22.000] [1]
CHNL# 16: [ANGL199085 [TRENTN5 13.800] [5]] [ANGL156661 [DARL G1 22.000] [1]
CHNL# 15: [ANGL199061 [TMP1 STO13.800] [1]] [ANGL156661 [DARL G1 22.000] [1]
CHNL# 13: [ANGL199043 [ACONIG1 20.000] [1]] [ANGL156661 [DARL G1 22.000] [1]
CHNL# 11: [ANGAN1 14.400] [1]] [ANGL156661 [DARL G1 22.000] [1]
TIME (SECONDS)
TUE, JAN 27 2009 15:56
NS ANGLE

2013 WINTER PEAK STORA 167, NS LOAD 2371
NS-NB=-200; NB-NE=300; CBX=543; ONI=773 ONS=863
1 PHASE FAULT ON L5041 AT 91H OPENS FROM 99H IN 9 CYCLE
91H-523 BREAKER FAILS NO BBU INSTALLED; TC 1 OFF
FILE: c108b-91H-523_BBU_nrect-2013WP-NS-import-200.out
CHNL# 10: [ANGL190472 [BLLDNG2 19.000] [1]] [ANGL156661 [DARL G1 22.000] [1]
CHNL# 6: [ANGL190456 [LEPRG1 26.000] [1]] [ANGL156661 [DARL G1 22.000] [1]
CHNL# 5: [ANGL190450 [MACTG1 13.800] [1]] [ANGL156661 [DARL G1 22.000] [1]
CHNL# 3: [ANGL126652 [RAV 3 22.000] [1]] [ANGL156661 [DARL G1 22.000] [1]
CHNL# 2: [ANGL101063 [MYST G7 22.000] [1]] [ANGL156661 [DARL G1 22.000] [1]
CHNL# 1: [ANGL100060 [MIS GT1 18.000] [1]] [ANGL156661 [DARL G1 22.000] [1]
TIME (SECONDS)
TUE, JAN 27 2009 15:56
"NE,NY,NB ANGLE"

2013 WINTER PEAK STORA 167, NS LOAD 2371
NS-NB=-200; NB-NE=300; CBX=543; ONI=773 ONS=863
1 PHASE FAULT ON L5041 AT 91H OPENS FROM 99H IN 9 CYCLE
91H-523 BREAKER FAILS NO BBU INSTALLED; TC 1 OFF
FILE: c108b-91H-523_BBU_nrect-2013WP-NS-import-200.out
CHNL# 59: [POWR199169 [TUFTCV3 14.400] [3]]
CHNL# 56: [POWR199086 [TRENTON613.800] [6]]
CHNL# 55: [POWR199085 [TRENTN5 13.800] [5]]
CHNL# 54: [POWR199061 [TMP1 STO13.800] [1]]
CHNL# 52: [POWR199043 [ACONIG1 20.000] [1]]
CHNL# 50: [POWR199001 [LINGAN1 14.400] [1]]
TIME (SECONDS)
TUE, JAN 27 2009 15:56
NS MW

2013 WINTER PEAK STORA 167, NS LOAD 2371
NS-NB=-200; NB-NE=300; CBX=543; ONI=773 ONS=863
1 PHASE FAULT ON L5041 AT 91H OPENS FROM 99H IN 9 CYCLE
91H-523 BREAKER FAILS NO BBU INSTALLED; TC 1 OFF
FILE: c108b-91H-523_BBU_nrect-2013WP-NS-import-200.out
CHNL# 49: [POWER190472 [BLLDNG2 19.000] [1]]
CHNL# 45: [POWER190456 [LEPRG1 26.000] [1]]
CHNL# 44: [POWER190450 [MACTG1 13.800] [1]]
CHNL# 42: [POWER126652 [RAV 3 22.000] [1]]
CHNL# 41: [POWER101063 [MYST G7 22.000] [1]]
CHNL# 40: [POWER100060 [MIS GT1 18.000] [1]]
TIME (SECONDS)
TUE, JAN 27 2009 15:56
"NE,NY,NB POWER"

2013 WINTER PEAK STORA 167, NS LOAD 2371
NS-NB=-200; NB-NE=300; CBX=543; ONI=773 ONS=863
1 PHASE FAULT ON L5041 AT 91H OPENS FROM 99H IN 9 CYCLE
91H-523 BREAKER FAILS NO BBU INSTALLED; TC 1 OFF
FILE: c108b-91H-523_BBU_mrect-2013WP-NS-import-200.out
CHNL# 119: [VARS IR141-DIGBY]
CHNL# 118: [VARS IR137-STATIA]
CHNL# 117: [VARS IR114-GLENDHU]
CHNL# 116: [VARS IR84-DALHOUSIE]
CHNL# 115: [VARS IR82_NUTTBY]
CHNL# 114: [VARS IR45_AMHERST]
TIME (SECONDS)
TUE, JAN 27 2009 15:56
NS WIND MV

2013 WINTER PEAK STORA 167, NS LOAD 2371
NS-NB=-200; NB-NE=300; CBX=543; ONI=773 ONS=863
1 PHASE FAULT ON L5041 AT 91H OPENS FROM 99H IN 9 CYCLE
91H-523 BREAKER FAILS NO BBU INSTALLED; TC 1 OFF
FILE: c108b-91H-523_BBU_mrect-2013WP-NS-import-200.out
CHNL# 79: [POWER IR141-DIGBY]
CHNL# 78: [POWER IR137-STATIA]
CHNL# 77: [POWER IR114-GLENDHU]
CHNL# 76: [POWER IR84-DALHOUSIE]
CHNL# 75: [POWER IR82_NUTTBY]
CHNL# 74: [POWER IR45_AMHERST]
TIME (SECONDS)
TUE, JAN 27 2009 15:56
NS WIND MW

2013 WINTER PEAK STORA 167, NS LOAD 2371
NS-NB=-200; NB-NE=300; CBX=543; ONI=773 ONS=863
1 PHASE FAULT ON L5041 AT 91H OPENS FROM 99H IN 9 CYCLE
91H-523 BREAKER FAILS NO BBU INSTALLED; TC 1 OFF
FILE: c108b-91H-523_BBU_mrect-2013WP-NS-import-200.out
CHNL# 133: [VOLT199125 [ONSLOW 345.00]]
CHNL# 132: [VOLT199120 [HOPEWELL 345.00]]
CHNL# 131: [VOLT199045 [WOODBINE345.00]]
CHNL# 130: [VOLT190320 [SALBRY 345.00]]
CHNL# 128: [VOLT190004 [KESWICK 345.00]]
CHNL# 127: [VOLT 70002 [ORRINGTN345.00]]
TIME (SECONDS)
TUE, JAN 27 2009 15:56
"345KV VOLTAGE"

2013 WINTER PEAK STORA 167, NS LOAD 2371
NS-NB=-200; NB-NE=300; CBX=543; ONI=773 ONS=863
1 PHASE FAULT ON L5041 AT 91H OPENS FROM 99H IN 9 CYCLE
91H-523 BREAKER FAILS NO BBU INSTALLED; TC 1 OFF
FILE: c108b-91H-523_BBU_mrect-2013WP-NS-import-200.out
CHNL# 125: 60*(1+[FREQ199125 [ONSLOW 345.00]])
CHNL# 124: 60*(1+[FREQ199120 [HOPEWELL 345.00]])
CHNL# 123: 60*(1+[FREQ199045 [WOODBINE345.00]])
CHNL# 122: 60*(1+[FREQ190320 [SALBRY 345.00]])
CHNL# 121: 60*(1+[FREQ190197 [C.COVE 345.00]])
CHNL# 120: 60*(1+[FREQ 70002 [ORRINGTN345.00]])
TIME (SECONDS)
TUE, JAN 27 2009 15:56
FREQUENCY HZ

2013 WINTER PEAK STORA 167, NS LOAD 2371
NS-NB=-200; NB-NE=300; CBX=543; ONI=773 ONS=863
1 PHASE FAULT ON L5041 AT 91H OPENS FROM 99H IN 9 CYCLE
91H-523 BREAKER FAILS NO BBU INSTALLED; TC 1 OFF
FILE: c108b-91H-523_BBU_mrect-2013WP-NS-import-200.out
CHNL# 146: [VOLT199280 [TUSKET A138.00]]
CHNL# 145: [VOLT199193 [HHWAS 138.00]]
CHNL# 144: [VOLT199165 [TUFTCOVE138.00]]
CHNL# 143: [VOLT199138: [SPRNGHILL138.00]]
CHNL# 142: [VOLT199090 [50N-TREN138.00]]
CHNL# 141: [VOLT199051 [HASTINGS138.00]]
TIME (SECONDS)
TUE, JAN 27 2009 15:56
138KV BUS VOLTS

2013 WINTER PEAK STORA 167, NS LOAD 2371
NS-NB=-200; NB-NE=300; CBX=543; ONI=773 ONS=863
1 PHASE FAULT ON L5041 AT 91H OPENS FROM 99H IN 9 CYCLE
91H-523 BREAKER FAILS NO BBU INSTALLED; TC 1 OFF
FILE: c108b-91H-523_BBU_mrect-2013WP-NS-import-200.out
CHNL# 140: [VOLT199240 [BWATER A230.00]]
CHNL# 139: [VOLT199200 [BRUSHY 230.00]]
CHNL# 138: [VOLT199130 [ONSLOW 230.00]]
CHNL# 137: [VOLT199050 [HASTINGS230.00]]
CHNL# 136: [VOLT199044 [PT.ACONI230.00]]
CHNL# 135: [VOLT199000 [LINGAN 230.00]]
TIME (SECONDS)
TUE, JAN 27 2009 15:56
230KV BUS VOLTS

2013 WINTER PEAK STORA 167, NS LOAD 2371
NS-NB=-200; NB-NE=300; CBX=543; ONI=773 ONS=863
1 PHASE FAULT ON L5041 AT 91H OPENS FROM 99H IN 9 CYCLE
91H-523 BREAKER FAILS NO BBU INSTALLED; TC 1 OFF
FILE: c108b-91H-523_BBU_mrect-2013WP-NS-import-200.out
CHNL# 217: [L6513MW]
CHNL# 215: [L6503MW]
CHNL# 197: [L8003MW]
CHNL# 195: [L8004MW]
CHNL# 193: [L8001MW]
CHNL# 221: [L3001MW]
TIME (SECONDS)
TUE, JAN 27 2009 15:56
LINE FLOW MW

2013 WINTER PEAK STORA 167, NS LOAD 2371
NS-NB=-200; NB-NE=300; CBX=543; ONI=773 ONS=863
1 PHASE FAULT ON L5041 AT 91H OPENS FROM 99H IN 9 CYCLE
91H-523 BREAKER FAILS NO BBU INSTALLED; TC 1 OFF
FILE: c108b-91H-523_BBU_mrect-2013WP-NS-import-200.out
CHNL# 154: [IR141-DIGBYH69.0 VOLTS]
CHNL# 153: [IR137-STATIG25.0 VOLTS]
CHNL# 152: [IR114-GLENDH138.0 VOLTS]
CHNL# 151: [IR84-DALHOHV230.0 VOLTS]
CHNL# 150: [IR82 NUTBHV69.0 VOLTS]
CHNL# 149: [IR45 AMHERTP138.0 VOLTS]
TIME (SECONDS)
TUE, JAN 27 2009 15:56
WIND BUS VOLTS

2013 WINTER PEAK STORA 167, NS LOAD 2371
NS-NB=-200; NB-NE=300; CBX=543; ONI=773 ONS=863
1 PHASE FAULT ON L5041 AT 91H OPENS FROM 99H IN 9 CYCLE
91H-523 BREAKER FAILS NO BBU INSTALLED; TC1 AND 2 OFF
FILE: c108c-91H-523_BBU_nrecl-2013WP-NS-import-200.out
CHNL# 20: [ANGL199169 [TUFTCV3 14.400] [3]] [ANGL156661 [DARL G1 22.000] [1]
CHNL# 17: [ANGL199086 [TRENTON613.800] [6]] [ANGL156661 [DARL G1 22.000] [1]
CHNL# 16: [ANGL199085 [TRENTN5 13.800] [5]] [ANGL156661 [DARL G1 22.000] [1]
CHNL# 15: [ANGL199061 [TMP1 STO13.800] [1]] [ANGL156661 [DARL G1 22.000] [1]
CHNL# 13: [ANGL199043 [ACONIG1 20.000] [1]] [ANGL156661 [DARL G1 22.000] [1]
CHNL# 11: [ANGL199001 [LINGAN1 14.400] [1]] [ANGL156661 [DARL G1 22.000] [1]
100.00
-100.0
50.000
-150.0
0.0
1.0000
2.0000
3.0000
4.0000
5.0000
6.0000
7.0000
8.0000
9.0000
10.000
TIME (SECONDS)
TUE, JAN 27 2009 15:56
NS ANGLE

2013 WINTER PEAK STORA 167, NS LOAD 2371
NS-NB=-200; NB-NE=300; CBX=543; ONI=773 ONS=863
1 PHASE FAULT ON L5041 AT 91H OPENS FROM 99H IN 9 CYCLE
91H-523 BREAKER FAILS NO BBU INSTALLED; TC1 AND 2 OFF
FILE: c108c-91H-523_BBU_nrecl-2013WP-NS-import-200.out
CHNL# 10: [ANGL190472 [BLLDNG2 19.000] [1]] [ANGL156661 [DARL G1 22.000] [1]
CHNL# 6: [ANGL190456 [LEPRG1 26.000] [1]] [ANGL156661 [DARL G1 22.000] [1]
CHNL# 5: [ANGL190450 [MACTG1 13.800] [1]] [ANGL156661 [DARL G1 22.000] [1]
CHNL# 3: [ANGL126652 [RAV 3 22.000] [1]] [ANGL156661 [DARL G1 22.000] [1]
CHNL# 2: [ANGL101063 [MYST G7 22.000] [1]] [ANGL156661 [DARL G1 22.000] [1]
CHNL# 1: [ANGL100060 [MIS GT1 18.000] [1]] [ANGL156661 [DARL G1 22.000] [1]
100.00
-100.0
0.0
1.0000
2.0000
3.0000
4.0000
5.0000
6.0000
7.0000
8.0000
9.0000
10.000
TIME (SECONDS)
TUE, JAN 27 2009 15:56
"NE,NY,NB ANGLE"

2013 WINTER PEAK STORA 167, NS LOAD 2371
NS-NB=-200; NB-NE=300; CBX=543; ONI=773 ONS=863
1 PHASE FAULT ON L5041 AT 91H OPENS FROM 99H IN 9 CYCLE
91H-523 BREAKER FAILS NO BBU INSTALLED; TC1 AND 2 OFF
FILE: c108c-91H-523_BBU_nrecl-2013WP-NS-import-200.out
CHNL# 59: [POWER199169 [TUFTCV3 14.400] [3]]
CHNL# 56: [POWER199086 [TRENTON613.800] [6]]
CHNL# 55: [POWER199085 [TRENTN5 13.800] [5]]
CHNL# 54: [POWER199061 [TMP1 STO13.800] [1]]
CHNL# 52: [POWER199043 [ACONIG1 20.000] [1]]
CHNL# 50: [POWER199001 [LINGAN1 14.400] [1]]
2.5000
1.0000
-1.500
0.0
0.0
1.0000
2.0000
3.0000
4.0000
5.0000
6.0000
7.0000
8.0000
9.0000
10.000
TIME (SECONDS)
TUE, JAN 27 2009 15:56
NS MW

2013 WINTER PEAK STORA 167, NS LOAD 2371
NS-NB=-200; NB-NE=300; CBX=543; ONI=773 ONS=863
1 PHASE FAULT ON L5041 AT 91H OPENS FROM 99H IN 9 CYCLE
91H-523 BREAKER FAILS NO BBU INSTALLED; TC1 AND 2 OFF
FILE: c108c-91H-523_BBU_nrecl-2013WP-NS-import-200.out
CHNL# 49: [POWER190472 [BLLDNG2 19.000] [1]]
CHNL# 45: [POWER190456 [LEPRG1 26.000] [1]]
CHNL# 44: [POWER190450 [MACTG1 13.800] [1]]
CHNL# 42: [POWER126652 [RAV 3 22.000] [1]]
CHNL# 41: [POWER101063 [MYST G7 22.000] [1]]
CHNL# 40: [POWER100060 [MIS GT1 18.000] [1]]
7.0000
9.0000
5.0000
5.0000
6.5000
2.0000
4.0000
0.0
0.0
1.0000
0.0
1.0000
2.0000
3.0000
4.0000
5.0000
6.0000
7.0000
8.0000
9.0000
10.000
TIME (SECONDS)
TUE, JAN 27 2009 15:56
"NE,NY,NB POWER"

2013 WINTER PEAK STORA 167, NS LOAD 2371
NS-NB=-200; NB-NE=300; CBX=543; ONI=773 ONS=863
1 PHASE FAULT ON L5041 AT 91H OPENS FROM 99H IN 9 CYCLE
91H-523 BREAKER FAILS NO BBU INSTALLED; TC1 AND 2 OFF
FILE: c108c-91H-523_BBU_mrec-2013WP-NS-import-200.out
CHNL# 119: [VARS IR141-DIGBY]
CHNL# 118: [VARS IR137-STATIA]
CHNL# 117: [VARS IR114-GLENDHU]
CHNL# 116: [VARS IR84-DALHOUSIE]
CHNL# 115: [VARS IR82_NUTTBY]
CHNL# 114: [VARS IR45_AMHERST]
TIME (SECONDS)
TUE, JAN 27 2009 15:56
NS WIND MV

2013 WINTER PEAK STORA 167, NS LOAD 2371
NS-NB=-200; NB-NE=300; CBX=543; ONI=773 ONS=863
1 PHASE FAULT ON L5041 AT 91H OPENS FROM 99H IN 9 CYCLE
91H-523 BREAKER FAILS NO BBU INSTALLED; TC1 AND 2 OFF
FILE: c108c-91H-523_BBU_mrec-2013WP-NS-import-200.out
CHNL# 79: [POWER IR141-DIGBY]
CHNL# 78: [POWER IR137-STATIA]
CHNL# 77: [POWER IR114-GLENDHU]
CHNL# 76: [POWER IR84-DALHOUSIE]
CHNL# 75: [POWER IR82_NUTTBY]
CHNL# 74: [POWER IR45_AMHERST]
TIME (SECONDS)
TUE, JAN 27 2009 15:56
NS WIND MW

2013 WINTER PEAK STORA 167, NS LOAD 2371
NS-NB=-200; NB-NE=300; CBX=543; ONI=773 ONS=863
1 PHASE FAULT ON L5041 AT 91H OPENS FROM 99H IN 9 CYCLE
91H-523 BREAKER FAILS NO BBU INSTALLED; TC1 AND 2 OFF
FILE: c108c-91H-523_BBU_mrec-2013WP-NS-import-200.out
CHNL# 133: [VOLT199125 [ONSLOW 345.00]]
CHNL# 132: [VOLT199120 [HOPEWELL 345.00]]
CHNL# 131: [VOLT199045 [WOODBINE345.00]]
CHNL# 130: [VOLT190320 [SALBRY 345.00]]
CHNL# 128: [VOLT190004 [KESWICK 345.00]]
CHNL# 127: [VOLT 70002 [ORRINGTN345.00]]
TIME (SECONDS)
TUE, JAN 27 2009 15:56
"345KV VOLTAGE"

2013 WINTER PEAK STORA 167, NS LOAD 2371
NS-NB=-200; NB-NE=300; CBX=543; ONI=773 ONS=863
1 PHASE FAULT ON L5041 AT 91H OPENS FROM 99H IN 9 CYCLE
91H-523 BREAKER FAILS NO BBU INSTALLED; TC1 AND 2 OFF
FILE: c108c-91H-523_BBU_mrec-2013WP-NS-import-200.out
CHNL# 125: 60*(1+[FREQ199125 [ONSLOW 345.00]])
CHNL# 124: 60*(1+[FREQ199120 [HOPEWELL 345.00]])
CHNL# 123: 60*(1+[FREQ199045 [WOODBINE345.00]])
CHNL# 122: 60*(1+[FREQ190320 [SALBRY 345.00]])
CHNL# 121: 60*(1+[FREQ190197 [C.COVE 345.00]])
CHNL# 120: 60*(1+[FREQ 70002 [ORRINGTN345.00]])
TIME (SECONDS)
TUE, JAN 27 2009 15:56
FREQUENCY HZ

2013 WINTER PEAK STORA 167, NS LOAD 2371
NS-NB=-200; NB-NE=300; CBX=543; ONI=773 ONS=863
1 PHASE FAULT ON L5041 AT 91H OPENS FROM 99H IN 9 CYCLE
91H-523 BREAKER FAILS NO BBU INSTALLED; TC1 AND 2 OFF
FILE: c108c-91H-523_BBU_mrect-2013WP-NS-import-200.out
CHNL# 146: [VOLT199280 [TUSKET A138.00]]
CHNL# 145: [VOLT199193 [HHWAS 138.00]]
CHNL# 144: [VOLT199165 [TUFTCOVE138.00]]
CHNL# 143: [VOLT199138: [SPRNGHIL138.00]]
CHNL# 142: [VOLT199090 [50N-TREN138.00]]
CHNL# 141: [VOLT199051 [HASTINGS138.00]]
TIME (SECONDS)
TUE, JAN 27 2009 15:56
138KV BUS VOLTS

2013 WINTER PEAK STORA 167, NS LOAD 2371
NS-NB=-200; NB-NE=300; CBX=543; ONI=773 ONS=863
1 PHASE FAULT ON L5041 AT 91H OPENS FROM 99H IN 9 CYCLE
91H-523 BREAKER FAILS NO BBU INSTALLED; TC1 AND 2 OFF
FILE: c108c-91H-523_BBU_mrect-2013WP-NS-import-200.out
CHNL# 140: [VOLT199240 [BWATER A230.00]]
CHNL# 139: [VOLT199200 [BRUSHY 230.00]]
CHNL# 138: [VOLT199130 [ONSLOW 230.00]]
CHNL# 137: [VOLT199050 [HASTINGS230.00]]
CHNL# 136: [VOLT199044 [PT.ACONI230.00]]
CHNL# 135: [VOLT199000 [LINGAN 230.00]]
TIME (SECONDS)
TUE, JAN 27 2009 15:56
230KV BUS VOLTS

2013 WINTER PEAK STORA 167, NS LOAD 2371
NS-NB=-200; NB-NE=300; CBX=543; ONI=773 ONS=863
1 PHASE FAULT ON L5041 AT 91H OPENS FROM 99H IN 9 CYCLE
91H-523 BREAKER FAILS NO BBU INSTALLED; TC1 AND 2 OFF
FILE: c108c-91H-523_BBU_mrect-2013WP-NS-import-200.out
CHNL# 217: [L6533MW] 250.00 -250.0
CHNL# 215: [L6503MW] 500.00 0.0
CHNL# 197: [L8003MW] 1000.0 0.0
CHNL# 195: [L8004MW] 500.00 0.0
CHNL# 193: [L8001MW] 1000.0 -1000.
CHNL# 221: [L3001MW] 1000.0 -1000.
TIME (SECONDS)
TUE, JAN 27 2009 15:56
LINE FLOW MW

2013 WINTER PEAK STORA 167, NS LOAD 2371
NS-NB=-200; NB-NE=300; CBX=543; ONI=773 ONS=863
1 PHASE FAULT ON L5041 AT 91H OPENS FROM 99H IN 9 CYCLE
91H-523 BREAKER FAILS NO BBU INSTALLED; TC1 AND 2 OFF
FILE: c108c-91H-523_BBU_mrect-2013WP-NS-import-200.out
CHNL# 154: [IR141-DIGBYH69.0 VOLTS]
CHNL# 153: [IR137-STATIG25.0 VOLTS]
CHNL# 152: [IR114-GLENDH138.0 VOLTS]
CHNL# 151: [IR84-DALHOHV230.0 VOLTS]
CHNL# 150: [IR82 NUTBHV69.0 VOLTS]
CHNL# 149: [IR45 AMHERTP138.0 VOLTS]
TIME (SECONDS)
TUE, JAN 27 2009 15:56
WIND BUS VOLTS

2013 WINTER PEAK STORA 167, NS LOAD 2371
NS-NB=-200; NB-NE=300; CBX=543; ONI=773 ONS=863
1 PHASE FAULT ON L5041 AT 91H OPENS FROM 99H IN 9 CYCLE
91H-523 BREAKER FAILS NO BBU INSTALLED; ALL TC OFF
FILE: c108d-91H-523_BBU_nrect-2013WP-NS-import-200.out
CHNL# 20: [ANGL199169 [TUFTCV3 14.400] [3]] [ANGL156661 [DARL G1 22.000] [1]]
CHNL# 17: [ANGL199086 [TRENTON613.800] [6]] [ANGL156661 [DARL G1 22.000] [1]]
CHNL# 16: [ANGL199085 [TRENTN5 13.800] [5]] [ANGL156661 [DARL G1 22.000] [1]]
CHNL# 15: [ANGL199061 [TMP1 STO13.800] [1]] [ANGL156661 [DARL G1 22.000] [1]]
CHNL# 13: [ANGL199043 [ACONIG1 20.000] [1]] [ANGL156661 [DARL G1 22.000] [1]]
CHNL# 11: [ANGL199001 [LINGAN1 14.400] [1]] [ANGL156661 [DARL G1 22.000] [1]]
TIME (SECONDS)
TUE, JAN 27 2009 15:56
NS ANGLE

2013 WINTER PEAK STORA 167, NS LOAD 2371
NS-NB=-200; NB-NE=300; CBX=543; ONI=773 ONS=863
1 PHASE FAULT ON L5041 AT 91H OPENS FROM 99H IN 9 CYCLE
91H-523 BREAKER FAILS NO BBU INSTALLED; ALL TC OFF
FILE: c108d-91H-523_BBU_nrect-2013WP-NS-import-200.out
CHNL# 10: [ANGL190472 [BLLDNG2 19.000] [1]] [ANGL156661 [DARL G1 22.000] [1]]
CHNL# 6: [ANGL190456 [LEPRG1 26.000] [1]] [ANGL156661 [DARL G1 22.000] [1]]
CHNL# 5: [ANGL190450 [MACTG1 13.800] [1]] [ANGL156661 [DARL G1 22.000] [1]]
CHNL# 3: [ANGL126652 [RAV 3 22.000] [1]] [ANGL156661 [DARL G1 22.000] [1]]
CHNL# 2: [ANGL101063 [MYST G7 22.000] [1]] [ANGL156661 [DARL G1 22.000] [1]]
CHNL# 1: [ANGL100060 [MIS GT1 18.000] [1]] [ANGL156661 [DARL G1 22.000] [1]]
TIME (SECONDS)
TUE, JAN 27 2009 15:56
"NE,NY,NB ANGLE"

2013 WINTER PEAK STORA 167, NS LOAD 2371
NS-NB=-200; NB-NE=300; CBX=543; ONI=773 ONS=863
1 PHASE FAULT ON L5041 AT 91H OPENS FROM 99H IN 9 CYCLE
91H-523 BREAKER FAILS NO BBU INSTALLED; ALL TC OFF
FILE: c108d-91H-523_BBU_nrect-2013WP-NS-import-200.out
CHNL# 59: [POWR199169 [TUFTCV3 14.400] [3]]
CHNL# 56: [POWR199086 [TRENTON613.800] [6]]
CHNL# 55: [POWR199085 [TRENTN5 13.800] [5]]
CHNL# 54: [POWR199061 [TMP1 STO13.800] [1]]
CHNL# 52: [POWR199043 [ACONIG1 20.000] [1]]
CHNL# 50: [POWR199001 [LINGAN1 14.400] [1]]
TIME (SECONDS)
TUE, JAN 27 2009 15:56
NS MW

2013 WINTER PEAK STORA 167, NS LOAD 2371
NS-NB=-200; NB-NE=300; CBX=543; ONI=773 ONS=863
1 PHASE FAULT ON L5041 AT 91H OPENS FROM 99H IN 9 CYCLE
91H-523 BREAKER FAILS NO BBU INSTALLED; ALL TC OFF
FILE: c108d-91H-523_BBU_nrect-2013WP-NS-import-200.out
CHNL# 49: [POWER190472 [BLLDNG2 19.000] [1]]
CHNL# 45: [POWER190456 [LEPRG1 26.000] [1]]
CHNL# 44: [POWER190450 [MACTG1 13.800] [1]]
CHNL# 42: [POWER126652 [RAV 3 22.000] [1]]
CHNL# 41: [POWER101063 [MYST G7 22.000] [1]]
CHNL# 40: [POWER100060 [MIS GT1 18.000] [1]]
TIME (SECONDS)
TUE, JAN 27 2009 15:56
"NE,NY,NB POWER"

2013 WINTER PEAK STORA 167, NS LOAD 2371
NS-NB=-200; NB-NE=300; CBX=543; ONI=773 ONS=863
1 PHASE FAULT ON L5041 AT 91H OPENS FROM 99H IN 9 CYCLE
91H-523 BREAKER FAILS NO BBU INSTALLED; ALL TC OFF
FILE: c108d-91H-523_BBU_mrect-2013WP-NS-import-200.out
CHNL# 119: [VARS IR141-DIGBY]
CHNL# 118: [VARS IR137-STATIA]
CHNL# 117: [VARS IR114-GLENDHU]
CHNL# 116: [VARS IR84-DALHOUSIE]
CHNL# 115: [VARS IR82_NUTTBY]
CHNL# 114: [VARS IR45_AMHERST]
TIME (SECONDS)
TUE, JAN 27 2009 15:56
NS WIND MV

2013 WINTER PEAK STORA 167, NS LOAD 2371
NS-NB=-200; NB-NE=300; CBX=543; ONI=773 ONS=863
1 PHASE FAULT ON L5041 AT 91H OPENS FROM 99H IN 9 CYCLE
91H-523 BREAKER FAILS NO BBU INSTALLED; ALL TC OFF
FILE: c108d-91H-523_BBU_mrect-2013WP-NS-import-200.out
CHNL# 79: [POWER IR141-DIGBY]
CHNL# 78: [POWER IR137-STATIA]
CHNL# 77: [POWER IR114-GLENDHU]
CHNL# 76: [POWER IR84-DALHOUSIE]
CHNL# 75: [POWER IR82_NUTTBY]
CHNL# 74: [POWER IR45_AMHERST]
TIME (SECONDS)
TUE, JAN 27 2009 15:56
NS WIND MW

2013 WINTER PEAK STORA 167, NS LOAD 2371
NS-NB=-200; NB-NE=300; CBX=543; ONI=773 ONS=863
1 PHASE FAULT ON L5041 AT 91H OPENS FROM 99H IN 9 CYCLE
91H-523 BREAKER FAILS NO BBU INSTALLED; ALL TC OFF
FILE: c108d-91H-523_BBU_mrect-2013WP-NS-import-200.out
CHNL# 133: [VOLT199125 [ONSLOW 345.00]]
CHNL# 132: [VOLT199120 [HOPEWELL 345.00]]
CHNL# 131: [VOLT199045 [WOODBINE345.00]]
CHNL# 130: [VOLT190320 [SALBRY 345.00]]
CHNL# 128: [VOLT190004 [KESWICK 345.00]]
CHNL# 127: [VOLT 70002 [ORRINGTN345.00]]
TIME (SECONDS)
TUE, JAN 27 2009 15:56
"345KV VOLTAGE"

2013 WINTER PEAK STORA 167, NS LOAD 2371
NS-NB=-200; NB-NE=300; CBX=543; ONI=773 ONS=863
1 PHASE FAULT ON L5041 AT 91H OPENS FROM 99H IN 9 CYCLE
91H-523 BREAKER FAILS NO BBU INSTALLED; ALL TC OFF
FILE: c108d-91H-523_BBU_mrect-2013WP-NS-import-200.out
CHNL# 125: 60*(1+[FREQ199125 [ONSLOW 345.00]])
CHNL# 124: 60*(1+[FREQ199120 [HOPEWELL 345.00]])
CHNL# 123: 60*(1+[FREQ199045 [WOODBINE345.00]])
CHNL# 122: 60*(1+[FREQ190320 [SALBRY 345.00]])
CHNL# 121: 60*(1+[FREQ190197 [C.COVE 345.00]])
CHNL# 120: 60*(1+[FREQ 70002 [ORRINGTN345.00]])
TIME (SECONDS)
TUE, JAN 27 2009 15:56
FREQUENCY HZ

2013 WINTER PEAK STORA 167, NS LOAD 2371
NS-NB=-200; NB-NE=300; CBX=543; ONI=773 ONS=863
1 PHASE FAULT ON L5041 AT 91H OPENS FROM 99H IN 9 CYCLE
91H-523 BREAKER FAILS NO BBU INSTALLED; ALL TC OFF
FILE: c108d-91H-523_BBU_mrect-2013WP-NS-import-200.out
CHNL# 146: [VOLT199280 [TUSKET A138.00]]
CHNL# 145: [VOLT199193 [1H-WAS 138.00]]
CHNL# 144: [VOLT199165 [TUFTCOVE138.00]]
CHNL# 143: [VOLT199138: [SPRNGHILL138.00]]
CHNL# 142: [VOLT199090 [50N-TREN138.00]]
CHNL# 141: [VOLT199051 [HASTINGS138.00]]
1.2000
0.70000
0.0
1.0000
2.0000
3.0000
4.0000
5.0000
6.0000
7.0000
8.0000
9.0000
10.000
TIME (SECONDS)
TUE, JAN 27 2009 15:56
138KV BUS VOLTS

2013 WINTER PEAK STORA 167, NS LOAD 2371
NS-NB=-200; NB-NE=300; CBX=543; ONI=773 ONS=863
1 PHASE FAULT ON L5041 AT 91H OPENS FROM 99H IN 9 CYCLE
91H-523 BREAKER FAILS NO BBU INSTALLED; ALL TC OFF
FILE: c108d-91H-523_BBU_mrect-2013WP-NS-import-200.out
CHNL# 140: [VOLT199240 [BWATER A230.00]]
CHNL# 139: [VOLT199200 [BRUSHY 230.00]]
CHNL# 138: [VOLT199130 [ONSLOW 230.00]]
CHNL# 137: [VOLT199050 [HASTINGS230.00]]
CHNL# 136: [VOLT199044 [PT.ACONI230.00]]
CHNL# 135: [VOLT199000 [LINGAN 230.00]]
1.2000
0.70000
0.0
1.0000
2.0000
3.0000
4.0000
5.0000
6.0000
7.0000
8.0000
9.0000
10.000
TIME (SECONDS)
TUE, JAN 27 2009 15:56
230KV BUS VOLTS

2013 WINTER PEAK STORA 167, NS LOAD 2371
NS-NB=-200; NB-NE=300; CBX=543; ONI=773 ONS=863
1 PHASE FAULT ON L5041 AT 91H OPENS FROM 99H IN 9 CYCLE
91H-523 BREAKER FAILS NO BBU INSTALLED; ALL TC OFF
FILE: c108d-91H-523_BBU_mrect-2013WP-NS-import-200.out
CHNL# 217: [L6533MW]
CHNL# 215: [L6503MW]
CHNL# 197: [L8003MW]
CHNL# 195: [L8004MW]
CHNL# 193: [L8001MW]
CHNL# 221: [L3001MW]
250.00
500.00
1000.0
0.0
-250.0
-1000.
0.0
1.0000
2.0000
3.0000
4.0000
5.0000
6.0000
7.0000
8.0000
9.0000
10.000
TIME (SECONDS)
TUE, JAN 27 2009 15:56
LINE FLOW MW

2013 WINTER PEAK STORA 167, NS LOAD 2371
NS-NB=-200; NB-NE=300; CBX=543; ONI=773 ONS=863
1 PHASE FAULT ON L5041 AT 91H OPENS FROM 99H IN 9 CYCLE
91H-523 BREAKER FAILS NO BBU INSTALLED; ALL TC OFF
FILE: c108d-91H-523_BBU_mrect-2013WP-NS-import-200.out
CHNL# 154: [IR141-DIGBYH69.0 VOLTS]
CHNL# 153: [IR137-STATIG25.0 VOLTS]
CHNL# 152: [IR114-GLENDH138.0 VOLTS]
CHNL# 151: [IR84-DALHOHV230.0 VOLTS]
CHNL# 150: [IR82 NUTBHV69.0 VOLTS]
CHNL# 149: [IR45 AMHERTP138.0 VOLTS]
1.2000
0.70000
0.0
1.0000
2.0000
3.0000
4.0000
5.0000
6.0000
7.0000
8.0000
9.0000
10.000
TIME (SECONDS)
TUE, JAN 27 2009 15:56
WIND BUS VOLTS

2013 WINTER PEAK STORA 167, NS LOAD 2371
NS-NB=-200; NB-NE=300; CBX=543; ONI=773 ONS=863
1 PHASE FAULT ON 101H-B62 101H-600 BREAKER FAILS
BBU OPERTES IN 15 CYCLES ENTIRE BUS NO RECLOSING
FILE: c109-101h-600_BBU_mrecl-2013WP-NS-import-200.out
CHNL# 20: [ANGL199169 [TUFTCV3 14.400] [3]] [ANGL156661 [DARL G1 22.000] [1]
CHNL# 17: [ANGL199086 [TRENTON613.800] [6]] [ANGL156661 [DARL G1 22.000] [1]
CHNL# 16: [ANGL199085 [TRENTN5 13.800] [5]] [ANGL156661 [DARL G1 22.000] [1]
CHNL# 15: [ANGL199061 [TMP1 STO13.800] [1]] [ANGL156661 [DARL G1 22.000] [1]
CHNL# 13: [ANGL199043 [ACONIG1 20.000] [1]] [ANGL156661 [DARL G1 22.000] [1]
CHNL# 11: [ANGL199001 [LINGAN1 14.400] [1]] [ANGL156661 [DARL G1 22.000] [1]
100.00
-100.0
50.000
-150.0
0.0
1.0000
2.0000
3.0000
4.0000
5.0000
6.0000
7.0000
8.0000
9.0000
10.000
TIME (SECONDS)
TUE, JAN 27 2009 15:56
NS ANGLE

2013 WINTER PEAK STORA 167, NS LOAD 2371
NS-NB=-200; NB-NE=300; CBX=543; ONI=773 ONS=863
1 PHASE FAULT ON 101H-B62 101H-600 BREAKER FAILS
BBU OPERTES IN 15 CYCLES ENTIRE BUS NO RECLOSING
FILE: c109-101h-600_BBU_mrecl-2013WP-NS-import-200.out
CHNL# 10: [ANGL190472 [BLLDNG2 19.000] [1]] [ANGL156661 [DARL G1 22.000] [1]
CHNL# 6: [ANGL190456 [LEPRG1 26.000] [1]] [ANGL156661 [DARL G1 22.000] [1]
CHNL# 5: [ANGL190450 [MACTG1 13.800] [1]] [ANGL156661 [DARL G1 22.000] [1]
CHNL# 3: [ANGL126652 [RAV 3 22.000] [1]] [ANGL156661 [DARL G1 22.000] [1]
CHNL# 2: [ANGL101063 [MYST G7 22.000] [1]] [ANGL156661 [DARL G1 22.000] [1]
CHNL# 1: [ANGL100060 [MIS GT1 18.000] [1]] [ANGL156661 [DARL G1 22.000] [1]
100.00
-100.0
0.0
1.0000
2.0000
3.0000
4.0000
5.0000
6.0000
7.0000
8.0000
9.0000
10.000
TIME (SECONDS)
TUE, JAN 27 2009 15:56
"NE,NY,NB ANGLE"

2013 WINTER PEAK STORA 167, NS LOAD 2371
NS-NB=-200; NB-NE=300; CBX=543; ONI=773 ONS=863
1 PHASE FAULT ON 101H-B62 101H-600 BREAKER FAILS
BBU OPERTES IN 15 CYCLES ENTIRE BUS NO RECLOSING
FILE: c109-101h-600_BBU_mrecl-2013WP-NS-import-200.out
CHNL# 59: [POWR199169 [TUFTCV3 14.400] [3]]
CHNL# 56: [POWR199086 [TRENTON613.800] [6]]
CHNL# 55: [POWR199085 [TRENTN5 13.800] [5]]
CHNL# 54: [POWR199061 [TMP1 STO13.800] [1]]
CHNL# 52: [POWR199043 [ACONIG1 20.000] [1]]
CHNL# 50: [POWR199001 [LINGAN1 14.400] [1]]
2.5000
1.0000
-1.500
0.0
1.0000
2.0000
3.0000
4.0000
5.0000
6.0000
7.0000
8.0000
9.0000
10.000
TIME (SECONDS)
TUE, JAN 27 2009 15:56
NS MW

2013 WINTER PEAK STORA 167, NS LOAD 2371
NS-NB=-200; NB-NE=300; CBX=543; ONI=773 ONS=863
1 PHASE FAULT ON 101H-B62 101H-600 BREAKER FAILS
BBU OPERTES IN 15 CYCLES ENTIRE BUS NO RECLOSING
FILE: c109-101h-600_BBU_mrecl-2013WP-NS-import-200.out
CHNL# 49: [POWER190472 [BLLDNG2 19.000] [1]]
CHNL# 45: [POWER190456 [LEPRG1 26.000] [1]]
CHNL# 44: [POWER190450 [MACTG1 13.800] [1]]
CHNL# 42: [POWER126652 [RAV 3 22.000] [1]]
CHNL# 41: [POWER101063 [MYST G7 22.000] [1]]
CHNL# 40: [POWER100060 [MIS GT1 18.000] [1]]
7.0000
9.0000
5.0000
0.0
6.5000
1.0000
2.0000
4.0000
1.0000
2.0000
3.0000
4.0000
5.0000
6.0000
7.0000
8.0000
9.0000
10.000
TIME (SECONDS)
TUE, JAN 27 2009 15:56
"NE,NY,NB POWER"

NS WIND MV

NS WIND MW

"345KV VOLTAGE"

FREQUENCY HZ

2013 WINTER PEAK STORA 167, NS LOAD 2371
NS-NB=-200; NB-NE=300; CBX=543; ONI=773 ONS=863
1 PHASE FAULT ON 101H-B62 101H-600 BREAKER FAILS
BBU OPERTES IN 15 CYCLES ENTIRE BUS NO RECLOSING
FILE: c109-101h-600_BBU_mecl-2013WP-NS-import-200.out
CHNL# 146: [VOLT199280 [TUSKET A138.00]]
CHNL# 145: [VOLT199193 [HWAS 138.00]]
CHNL# 144: [VOLT199165 [TUFTCOVE138.00]]
CHNL# 143: [VOLT199138 [SPRNGHILL138.00]]
CHNL# 142: [VOLT199090 [SON-TREN138.00]]
CHNL# 141: [VOLT199051 [HASTINGS138.00]]
TIME (SECONDS)
TUE, JAN 27 2009 15:56
138KV BUS VOLTS

2013 WINTER PEAK STORA 167, NS LOAD 2371
NS-NB=-200; NB-NE=300; CBX=543; ONI=773 ONS=863
1 PHASE FAULT ON 101H-B62 101H-600 BREAKER FAILS
BBU OPERTES IN 15 CYCLES ENTIRE BUS NO RECLOSING
FILE: c109-101h-600_BBU_mecl-2013WP-NS-import-200.out
CHNL# 140: [VOLT199240 [BWATER A230.00]]
CHNL# 139: [VOLT199200 [BRUSHY 230.00]]
CHNL# 138: [VOLT199130 [ONSLOW 230.00]]
CHNL# 137: [VOLT199050 [HASTINGS230.00]]
CHNL# 136: [VOLT199044 [PT.ACONI230.00]]
CHNL# 135: [VOLT199000 [LINGAN 230.00]]
TIME (SECONDS)
TUE, JAN 27 2009 15:56
230KV BUS VOLTS

2013 WINTER PEAK STORA 167, NS LOAD 2371
NS-NB=-200; NB-NE=300; CBX=543; ONI=773 ONS=863
1 PHASE FAULT ON 101H-B62 101H-600 BREAKER FAILS
BBU OPERTES IN 15 CYCLES ENTIRE BUS NO RECLOSING
FILE: c109-101h-600_BBU_mecl-2013WP-NS-import-200.out
CHNL# 217: [L6533MW]
CHNL# 215: [L6503MW]
CHNL# 197: [L8003MW]
CHNL# 195: [L8004MW]
CHNL# 193: [L8001MW]
CHNL# 221: [L3001MW]
TIME (SECONDS)
TUE, JAN 27 2009 15:56
LINE FLOW MW

2013 WINTER PEAK STORA 167, NS LOAD 2371
NS-NB=-200; NB-NE=300; CBX=543; ONI=773 ONS=863
1 PHASE FAULT ON 101H-B62 101H-600 BREAKER FAILS
BBU OPERTES IN 15 CYCLES ENTIRE BUS NO RECLOSING
FILE: c109-101h-600_BBU_mecl-2013WP-NS-import-200.out
CHNL# 154: [IR141-DIGBYH69.0 VOLTS]
CHNL# 153: [IR137-STATIG25.0 VOLTS]
CHNL# 152: [IR114-GLENDH138.0 VOLTS]
CHNL# 151: [IR84-DALHOHV230.0 VOLTS]
CHNL# 150: [IR82_NUTBHV69.0 VOLTS]
CHNL# 149: [IR45_AMHERTP138.0 VOLTS]
TIME (SECONDS)
TUE, JAN 27 2009 15:56
WIND BUS VOLTS

2013 WINTER PEAK STORA 167, NS LOAD 2371
NS-NB=-200; NB-NE=300; CBX=543; ONI=773 ONS=863
1 PHASE FAULT ON L6009 AT 108H 108H-609 BREAKER FAILS
BBU OPERTES IN 15 CYCLES B2 NO RECLOSING; ALL BS ON
FILE: c110a-108h-609_BBU_nrect-2013WP-NS-import-200.out
CHNL# 20: [ANGL199169 [TUFTCV3 14.400] [3]] [ANGL156661 [DARL G1 22.000] [1]
CHNL# 17: [ANGL199086 [TRENTON613.800] [6]] [ANGL156661 [DARL G1 22.000] [1]
CHNL# 16: [ANGL199085 [TRENTN5 13.800] [5]] [ANGL156661 [DARL G1 22.000] [1]
CHNL# 15: [ANGL199061 [TMP1 STO13.800] [1]] [ANGL156661 [DARL G1 22.000] [1]
CHNL# 13: [ANGL199043 [ACONIG1 20.000] [1]] [ANGL156661 [DARL G1 22.000] [1]
CHNL# 11: [ANGL199001 [LINGAN1 14.400] [1]] [ANGL156661 [DARL G1 22.000] [1]
TIME (SECONDS)
TUE, JAN 27 2009 15:56
NS ANGLE

2013 WINTER PEAK STORA 167, NS LOAD 2371
NS-NB=-200; NB-NE=300; CBX=543; ONI=773 ONS=863
1 PHASE FAULT ON L6009 AT 108H 108H-609 BREAKER FAILS
BBU OPERTES IN 15 CYCLES B2 NO RECLOSING; ALL BS ON
FILE: c110a-108h-609_BBU_nrect-2013WP-NS-import-200.out
CHNL# 10: [ANGL190472 [BLLDNG2 19.000] [1]] [ANGL156661 [DARL G1 22.000] [1]
CHNL# 6: [ANGL190456 [LEPRG1 26.000] [1]] [ANGL156661 [DARL G1 22.000] [1]
CHNL# 5: [ANGL190450 [MACTG1 13.800] [1]] [ANGL156661 [DARL G1 22.000] [1]
CHNL# 3: [ANGL126652 [RAV 3 22.000] [1]] [ANGL156661 [DARL G1 22.000] [1]
CHNL# 2: [ANGL101063 [MYST G7 22.000] [1]] [ANGL156661 [DARL G1 22.000] [1]
CHNL# 1: [ANGL100060 [MIS GT1 18.000] [1]] [ANGL156661 [DARL G1 22.000] [1]
TIME (SECONDS)
TUE, JAN 27 2009 15:56
"NE,NY,NB ANGLE"

2013 WINTER PEAK STORA 167, NS LOAD 2371
NS-NB=-200; NB-NE=300; CBX=543; ONI=773 ONS=863
1 PHASE FAULT ON L6009 AT 108H 108H-609 BREAKER FAILS
BBU OPERTES IN 15 CYCLES B2 NO RECLOSING; ALL BS ON
FILE: c110a-108h-609_BBU_nrect-2013WP-NS-import-200.out
CHNL# 59: [POWR199169 [TUFTCV3 14.400] [3]]
CHNL# 56: [POWR199086 [TRENTON613.800] [6]]
CHNL# 55: [POWR199085 [TRENTN5 13.800] [5]]
CHNL# 54: [POWR199061 [TMP1 STO13.800] [1]]
CHNL# 52: [POWR199043 [ACONIG1 20.000] [1]]
CHNL# 50: [POWR199001 [LINGAN1 14.400] [1]]
TIME (SECONDS)
TUE, JAN 27 2009 15:56
NS MW

2013 WINTER PEAK STORA 167, NS LOAD 2371
NS-NB=-200; NB-NE=300; CBX=543; ONI=773 ONS=863
1 PHASE FAULT ON L6009 AT 108H 108H-609 BREAKER FAILS
BBU OPERTES IN 15 CYCLES B2 NO RECLOSING; ALL BS ON
FILE: c110a-108h-609_BBU_nrect-2013WP-NS-import-200.out
CHNL# 49: [POWER190472 [BLLDNG2 19.000] [1]]
CHNL# 45: [POWER190456 [LEPRG1 26.000] [1]]
CHNL# 44: [POWER190450 [MACTG1 13.800] [1]]
CHNL# 42: [POWER126652 [RAV 3 22.000] [1]]
CHNL# 41: [POWER101063 [MYST G7 22.000] [1]]
CHNL# 40: [POWER100060 [MIS GT1 18.000] [1]]
TIME (SECONDS)
TUE, JAN 27 2009 15:56
"NE,NY,NB POWER"

2013 WINTER PEAK STORA 167, NS LOAD 2371
NS-NB=-200; NB-NE=300; CBX=543; ONI=773 ONS=863
1 PHASE FAULT ON L6009 AT 108H 108H-609 BREAKER FAILS
BBU OPERTES IN 15 CYCLES B2 NO RECLOSING; ALL BS ON
FILE: c110a-108h-609_BBU_nrect-2013WP-NS-import-200.out
CHNL# 119: [VARS IR141-DIGBY]
CHNL# 118: [VARS IR137-STATIA]
CHNL# 117: [VARS IR114-GLENDHU]
CHNL# 116: [VARS IR84-DALHOUSIE]
CHNL# 115: [VARS IR82_NUTTBY]
CHNL# 114: [VARS IR45_AMHERST]
TIME (SECONDS)
TUE, JAN 27 2009 15:56
NS WIND MV

2013 WINTER PEAK STORA 167, NS LOAD 2371
NS-NB=-200; NB-NE=300; CBX=543; ONI=773 ONS=863
1 PHASE FAULT ON L6009 AT 108H 108H-609 BREAKER FAILS
BBU OPERTES IN 15 CYCLES B2 NO RECLOSING; ALL BS ON
FILE: c110a-108h-609_BBU_nrect-2013WP-NS-import-200.out
CHNL# 79: [POWER IR141-DIGBY]
CHNL# 78: [POWER IR137-STATIA]
CHNL# 77: [POWER IR114-GLENDHU]
CHNL# 76: [POWER IR84-DALHOUSIE]
CHNL# 75: [POWER IR82_NUTTBY]
CHNL# 74: [POWER IR45_AMHERST]
TIME (SECONDS)
TUE, JAN 27 2009 15:56
NS WIND MW

2013 WINTER PEAK STORA 167, NS LOAD 2371
NS-NB=-200; NB-NE=300; CBX=543; ONI=773 ONS=863
1 PHASE FAULT ON L6009 AT 108H 108H-609 BREAKER FAILS
BBU OPERTES IN 15 CYCLES B2 NO RECLOSING; ALL BS ON
FILE: c110a-108h-609_BBU_nrect-2013WP-NS-import-200.out
CHNL# 133: [VOLT199125 [ONSLOW 345.00]]
CHNL# 132: [VOLT199120 [HOPEWELL 345.00]]
CHNL# 131: [VOLT199045 [WOODBINE345.00]]
CHNL# 130: [VOLT190320 [SALBRY 345.00]]
CHNL# 128: [VOLT190004 [KESWICK 345.00]]
CHNL# 127: [VOLT 70002 [ORRINGTN345.00]]
TIME (SECONDS)
TUE, JAN 27 2009 15:56
"345KV VOLTAGE"

2013 WINTER PEAK STORA 167, NS LOAD 2371
NS-NB=-200; NB-NE=300; CBX=543; ONI=773 ONS=863
1 PHASE FAULT ON L6009 AT 108H 108H-609 BREAKER FAILS
BBU OPERTES IN 15 CYCLES B2 NO RECLOSING; ALL BS ON
FILE: c110a-108h-609_BBU_nrect-2013WP-NS-import-200.out
CHNL# 125: 60*(1+[FREQ199125 [ONSLOW 345.00]])
CHNL# 124: 60*(1+[FREQ199120 [HOPEWELL 345.00]])
CHNL# 123: 60*(1+[FREQ199045 [WOODBINE345.00]])
CHNL# 122: 60*(1+[FREQ190320 [SALBRY 345.00]])
CHNL# 121: 60*(1+[FREQ190197 [C.COVE 345.00]])
CHNL# 120: 60*(1+[FREQ 70002 [ORRINGTN345.00]])
TIME (SECONDS)
TUE, JAN 27 2009 15:56
FREQUENCY HZ

2013 WINTER PEAK STORA 167, NS LOAD 2371
NS-NB=-200; NB-NE=300; CBX=543; ONI=773 ONS=863
1 PHASE FAULT ON L6009 AT 108H 108H-609 BREAKER FAILS
BBU OPERTES IN 15 CYCLES B2 NO RECLOSING; ALL BS ON
FILE: c110a-108h-609_BBU_nrect-2013WP-NS-import-200.out
CHNL# 146: [VOLT199280 [TUSKET A138.00]]
CHNL# 145: [VOLT199193 [HHWAS 138.00]]
CHNL# 144: [VOLT199165 [TUFTCOVE138.00]]
CHNL# 143: [VOLT199138: [SPRNGHILL138.00]]
CHNL# 142: [VOLT199090 [SON-TREN138.00]]
CHNL# 141: [VOLT199051 [HASTINGS138.00]]
1.2000
0.70000
0.0
1.0000
2.0000
3.0000
4.0000
5.0000
6.0000
7.0000
8.0000
9.0000
10.000
TIME (SECONDS)
TUE, JAN 27 2009 15:56
138KV BUS VOLTS

2013 WINTER PEAK STORA 167, NS LOAD 2371
NS-NB=-200; NB-NE=300; CBX=543; ONI=773 ONS=863
1 PHASE FAULT ON L6009 AT 108H 108H-609 BREAKER FAILS
BBU OPERTES IN 15 CYCLES B2 NO RECLOSING; ALL BS ON
FILE: c110a-108h-609_BBU_nrect-2013WP-NS-import-200.out
CHNL# 140: [VOLT199240 [BWATER A230.00]]
CHNL# 139: [VOLT199200 [BRUSHY 230.00]]
CHNL# 138: [VOLT199130 [ONSLOW 230.00]]
CHNL# 137: [VOLT199050 [HASTINGS230.00]]
CHNL# 136: [VOLT199044 [PT.ACONI230.00]]
CHNL# 135: [VOLT199000 [LINGAN 230.00]]
1.2000
0.70000
0.0
1.0000
2.0000
3.0000
4.0000
5.0000
6.0000
7.0000
8.0000
9.0000
10.000
TIME (SECONDS)
TUE, JAN 27 2009 15:56
230KV BUS VOLTS

2013 WINTER PEAK STORA 167, NS LOAD 2371
NS-NB=-200; NB-NE=300; CBX=543; ONI=773 ONS=863
1 PHASE FAULT ON L6009 AT 108H 108H-609 BREAKER FAILS
BBU OPERTES IN 15 CYCLES B2 NO RECLOSING; ALL BS ON
FILE: c110a-108h-609_BBU_nrect-2013WP-NS-import-200.out
CHNL# 217: [L6513MW]
CHNL# 215: [L6503MW]
CHNL# 197: [L8003MW]
CHNL# 195: [L8004MW]
CHNL# 193: [L8001MW]
CHNL# 221: [L3001MW]
250.00
500.00
1000.0
0.0
-250.0
-1000.
0.0
1.0000
2.0000
3.0000
4.0000
5.0000
6.0000
7.0000
8.0000
9.0000
10.000
TIME (SECONDS)
TUE, JAN 27 2009 15:56
LINE FLOW MW

2013 WINTER PEAK STORA 167, NS LOAD 2371
NS-NB=-200; NB-NE=300; CBX=543; ONI=773 ONS=863
1 PHASE FAULT ON L6009 AT 108H 108H-609 BREAKER FAILS
BBU OPERTES IN 15 CYCLES B2 NO RECLOSING; ALL BS ON
FILE: c110a-108h-609_BBU_nrect-2013WP-NS-import-200.out
CHNL# 154: [IR141-DIGBYH69.0 VOLTS]
CHNL# 153: [IR137-STATIG25.0 VOLTS]
CHNL# 152: [IR114-GLENDH138.0 VOLTS]
CHNL# 151: [IR84-DALHOHV230.0 VOLTS]
CHNL# 150: [IR82 NUTBHV69.0 VOLTS]
CHNL# 149: [IR45 AMHERTP138.0 VOLTS]
1.2000
0.70000
0.0
1.0000
2.0000
3.0000
4.0000
5.0000
6.0000
7.0000
8.0000
9.0000
10.000
TIME (SECONDS)
TUE, JAN 27 2009 15:56
WIND BUS VOLTS

2013 WINTER PEAK STORA 167, NS LOAD 2371
NS-NB=-200; NB-NE=300; CBX=543; ONI=773 ONS=863
1 PHASE FAULT ON L6009 AT 108H 108H-609 BREAKER FAILS
BBU OPERTES IN 15 CYCLES B2 NO RECLOSING NO BS ON
FILE: c110b-108h-609_BBU_nrec-2013WP-NS-import-200.out
CHNL#S 20:4 [ANGL199169 [TUFTCV3 14.400] [3]] [ANGL156661 [DARL G1 22.000] [1
CHNL#S 17:4 [ANGL199086 [TRENTON613.800] [6]] [ANGL156661 [DARL G1 22.000] [1
CHNL#S 16:4 [ANGL199085 [TRENTN5 13.800] [5]] [ANGL156661 [DARL G1 22.000] [1
CHNL#S 15:4 [ANGL199061 [TMP1 STO13.800] [1]] [ANGL156661 [DARL G1 22.000] [1
CHNL#S 13:4 [ANGL199043 [ACONIG1 20.000] [1]] [ANGL156661 [DARL G1 22.000] [1
CHNL#S 11:4 [ANGL199001 [LINGAN1 14.400] [1]] [ANGL156661 [DARL G1 22.000] [1
TIME (SECONDS)
TUE, JAN 27 2009 15:56
NS ANGLE

2013 WINTER PEAK STORA 167, NS LOAD 2371
NS-NB=-200; NB-NE=300; CBX=543; ONI=773 ONS=863
1 PHASE FAULT ON L6009 AT 108H 108H-609 BREAKER FAILS
BBU OPERTES IN 15 CYCLES B2 NO RECLOSING NO BS ON
FILE: c110b-108h-609_BBU_nrec-2013WP-NS-import-200.out
CHNL#S 10:4 [ANGL190472 [BLLDNG2 19.000] [1]] [ANGL156661 [DARL G1 22.000] [1
CHNL#S 6:4 [ANGL190456 [LEPRG1 26.000] [1]] [ANGL156661 [DARL G1 22.000] [1
CHNL#S 5:4 [ANGL190450 [MACTG1 13.800] [1]] [ANGL156661 [DARL G1 22.000] [1
CHNL#S 3:4 [ANGL126652 [RAV 3 22.000] [1]] [ANGL156661 [DARL G1 22.000] [1
CHNL#S 2:4 [ANGL101063 [MYST G7 22.000] [1]] [ANGL156661 [DARL G1 22.000] [1
CHNL#S 1:4 [ANGL100060 [MIS GT1 18.000] [1]] [ANGL156661 [DARL G1 22.000] [1
TIME (SECONDS)
TUE, JAN 27 2009 15:56
"NE,NY,NB ANGLE"

2013 WINTER PEAK STORA 167, NS LOAD 2371
NS-NB=-200; NB-NE=300; CBX=543; ONI=773 ONS=863
1 PHASE FAULT ON L6009 AT 108H 108H-609 BREAKER FAILS
BBU OPERTES IN 15 CYCLES B2 NO RECLOSING NO BS ON
FILE: c110b-108h-609_BBU_nrec-2013WP-NS-import-200.out
CHNL# 59: [POWER199169 [TUFTCV3 14.400] [3]]
CHNL# 56: [POWER199086 [TRENTON613.800] [6]]
CHNL# 55: [POWER199085 [TRENTN5 13.800] [5]]
CHNL# 54: [POWER199061 [TMP1 STO13.800] [1]]
CHNL# 52: [POWER199043 [ACONIG1 20.000] [1]]
CHNL# 50: [POWER199001 [LINGAN1 14.400] [1]]
TIME (SECONDS)
TUE, JAN 27 2009 15:56
NS MW

2013 WINTER PEAK STORA 167, NS LOAD 2371
NS-NB=-200; NB-NE=300; CBX=543; ONI=773 ONS=863
1 PHASE FAULT ON L6009 AT 108H 108H-609 BREAKER FAILS
BBU OPERTES IN 15 CYCLES B2 NO RECLOSING NO BS ON
FILE: c110b-108h-609_BBU_nrec-2013WP-NS-import-200.out
CHNL# 49: [POWER190472 [BLLDNG2 19.000] [1]]
CHNL# 45: [POWER190456 [LEPRG1 26.000] [1]]
CHNL# 44: [POWER190450 [MACTG1 13.800] [1]]
CHNL# 42: [POWER126652 [RAV 3 22.000] [1]]
CHNL# 41: [POWER101063 [MYST G7 22.000] [1]]
CHNL# 40: [POWER100060 [MIS GT1 18.000] [1]]
TIME (SECONDS)
TUE, JAN 27 2009 15:56
"NE,NY,NB POWER"

2013 WINTER PEAK STORA 167, NS LOAD 2371
NS-NB=-200; NB-NE=300; CBX=543; ONI=773 ONS=863
1 PHASE FAULT ON L6009 AT 108H 108H-609 BREAKER FAILS
BBU OPERTES IN 15 CYCLES B2 NO RECLOSING NO BS ON
FILE: c110b-108h-609_BBU_nrec-2013WP-NS-import-200.out
CHNL# 119: [VARS IR141-DIGBY]
CHNL# 118: [VARS IR137-STATIA]
CHNL# 117: [VARS IR114-GLENDHU]
CHNL# 116: [VARS IR84-DALHOUSIE]
CHNL# 115: [VARS IR82_NUTTBY]
CHNL# 114: [VARS IR45_AMHERST]
TIME (SECONDS)
TUE, JAN 27 2009 15:56
NS WIND MV

2013 WINTER PEAK STORA 167, NS LOAD 2371
NS-NB=-200; NB-NE=300; CBX=543; ONI=773 ONS=863
1 PHASE FAULT ON L6009 AT 108H 108H-609 BREAKER FAILS
BBU OPERTES IN 15 CYCLES B2 NO RECLOSING NO BS ON
FILE: c110b-108h-609_BBU_nrec-2013WP-NS-import-200.out
CHNL# 79: [POWER IR141-DIGBY]
CHNL# 78: [POWER IR137-STATIA]
CHNL# 77: [POWER IR114-GLENDHU]
CHNL# 76: [POWER IR84-DALHOUSIE]
CHNL# 75: [POWER IR82_NUTTBY]
CHNL# 74: [POWER IR45_AMHERST]
TIME (SECONDS)
TUE, JAN 27 2009 15:56
NS WIND MW

2013 WINTER PEAK STORA 167, NS LOAD 2371
NS-NB=-200; NB-NE=300; CBX=543; ONI=773 ONS=863
1 PHASE FAULT ON L6009 AT 108H 108H-609 BREAKER FAILS
BBU OPERTES IN 15 CYCLES B2 NO RECLOSING NO BS ON
FILE: c110b-108h-609_BBU_nrec-2013WP-NS-import-200.out
CHNL# 133: [VOLT199125 [ONSLOW 345.00]]
CHNL# 132: [VOLT199120 [HOPEWELL 345.00]]
CHNL# 131: [VOLT199045 [WOODBINE345.00]]
CHNL# 130: [VOLT190320 [SALBRY 345.00]]
CHNL# 128: [VOLT190004 [KESWICK 345.00]]
CHNL# 127: [VOLT 70002 [ORRINGTN345.00]]
TIME (SECONDS)
TUE, JAN 27 2009 15:56
"345KV VOLTAGE"

2013 WINTER PEAK STORA 167, NS LOAD 2371
NS-NB=-200; NB-NE=300; CBX=543; ONI=773 ONS=863
1 PHASE FAULT ON L6009 AT 108H 108H-609 BREAKER FAILS
BBU OPERTES IN 15 CYCLES B2 NO RECLOSING NO BS ON
FILE: c110b-108h-609_BBU_nrec-2013WP-NS-import-200.out
CHNL# 125: 60*(1+[FREQ199125 [ONSLOW 345.00]])
CHNL# 124: 60*(1+[FREQ199120 [HOPEWELL 345.00]])
CHNL# 123: 60*(1+[FREQ199045 [WOODBINE345.00]])
CHNL# 122: 60*(1+[FREQ190320 [SALBRY 345.00]])
CHNL# 121: 60*(1+[FREQ190197 [C.COVE 345.00]])
CHNL# 120: 60*(1+[FREQ 70002 [ORRINGTN345.00]])
TIME (SECONDS)
TUE, JAN 27 2009 15:56
FREQUENCY HZ

2013 WINTER PEAK STORA 167, NS LOAD 2371
NS-NB=-200; NB-NE=300; CBX=543; ONI=773 ONS=863
1 PHASE FAULT ON L6009 AT 108H 108H-609 BREAKER FAILS
BBU OPERTES IN 15 CYCLES B2 NO RECLOSING NO BS ON
FILE: c110b-108h-609_BBU_nrect-2013WP-NS-import-200.out
CHNL# 146: [VOLT199280 [TUSKET A138.00]]
CHNL# 145: [VOLT199193 [HHWAS 138.00]]
CHNL# 144: [VOLT199165 [TUFTCOVE138.00]]
CHNL# 143: [VOLT199138 [SPRNGHILL138.00]]
CHNL# 142: [VOLT199090 [SON-TREN138.00]]
CHNL# 141: [VOLT199051 [HASTINGS138.00]]
TIME (SECONDS)
TUE, JAN 27 2009 15:56
138KV BUS VOLTS

2013 WINTER PEAK STORA 167, NS LOAD 2371
NS-NB=-200; NB-NE=300; CBX=543; ONI=773 ONS=863
1 PHASE FAULT ON L6009 AT 108H 108H-609 BREAKER FAILS
BBU OPERTES IN 15 CYCLES B2 NO RECLOSING NO BS ON
FILE: c110b-108h-609_BBU_nrect-2013WP-NS-import-200.out
CHNL# 140: [VOLT199240 [BWATER A230.00]]
CHNL# 139: [VOLT199200 [BRUSHY 230.00]]
CHNL# 138: [VOLT199130 [ONSLOW 230.00]]
CHNL# 137: [VOLT199050 [HASTINGS230.00]]
CHNL# 136: [VOLT199044 [PT.ACONI230.00]]
CHNL# 135: [VOLT199000 [LINGAN 230.00]]
TIME (SECONDS)
TUE, JAN 27 2009 15:56
230KV BUS VOLTS

2013 WINTER PEAK STORA 167, NS LOAD 2371
NS-NB=-200; NB-NE=300; CBX=543; ONI=773 ONS=863
1 PHASE FAULT ON L6009 AT 108H 108H-609 BREAKER FAILS
BBU OPERTES IN 15 CYCLES B2 NO RECLOSING NO BS ON
FILE: c110b-108h-609_BBU_nrect-2013WP-NS-import-200.out
CHNL# 217: [L6513MW]
CHNL# 215: [L6503MW]
CHNL# 197: [L8003MW]
CHNL# 195: [L8004MW]
CHNL# 193: [L8001MW]
CHNL# 221: [L3001MW]
TIME (SECONDS)
TUE, JAN 27 2009 15:56
LINE FLOW MW

2013 WINTER PEAK STORA 167, NS LOAD 2371
NS-NB=-200; NB-NE=300; CBX=543; ONI=773 ONS=863
1 PHASE FAULT ON L6009 AT 108H 108H-609 BREAKER FAILS
BBU OPERTES IN 15 CYCLES B2 NO RECLOSING NO BS ON
FILE: c110b-108h-609_BBU_nrect-2013WP-NS-import-200.out
CHNL# 154: [IR141-DIGBYH69.0 VOLTS]
CHNL# 153: [IR137-STATIG25.0 VOLTS]
CHNL# 152: [IR114-GLENDH138.0 VOLTS]
CHNL# 151: [IR84-DALHOHV230.0 VOLTS]
CHNL# 150: [IR82_NUTBHV69.0 VOLTS]
CHNL# 149: [IR45_AMHERTP138.0 VOLTS]
TIME (SECONDS)
TUE, JAN 27 2009 15:56
WIND BUS VOLTS

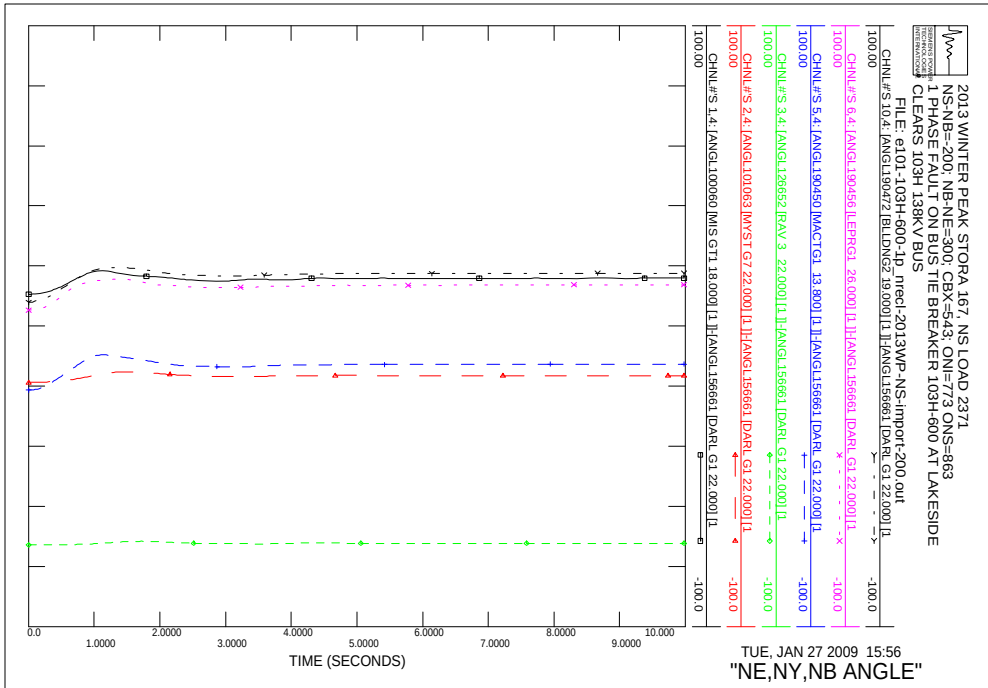
2013 WINTER PEAK STORA 167, NS LOAD 2371
NS-NB=-200; NB-NE=300; CBX=543; ONI=773 ONS=863
1 PHASE FAULT ON BUS TIE BREAKER 103H-600 AT LAKESIDE
CLEARS 103H 138KV BUS
FILE: e101-103H-600-1p_nrecl-2013WP-NS-import-200.out
CHNL#'S 10,4: [ANGL190472 [BLLDNG2 19.000] [1]]-[ANGL156661 [DARL G1 22.000] [1
CHNL#'S 6,4: [ANGL190456 [LEPRG1 26.000] [1]]-[ANGL156661 [DARL G1 22.000] [1
CHNL#'S 5,4: [ANGL190450 [MACTG1 13.800] [1]]-[ANGL156661 [DARL G1 22.000] [1
CHNL#'S 3,4: [ANGL126652 [RAV 3 22.000] [1]]-[ANGL156661 [DARL G1 22.000] [1
CHNL#'S 2,4: [ANGL101063 [MYST G7 22.000] [1]]-[ANGL156661 [DARL G1 22.000] [1
CHNL#'S 1,4: [ANGL100060 [MIS GT1 18.000] [1]]-[ANGL156661 [DARL G1 22.000] [1
TIME (SECONDS)
TUE, JAN 27 2009 15:56
"NE,NY,NB ANGLE"

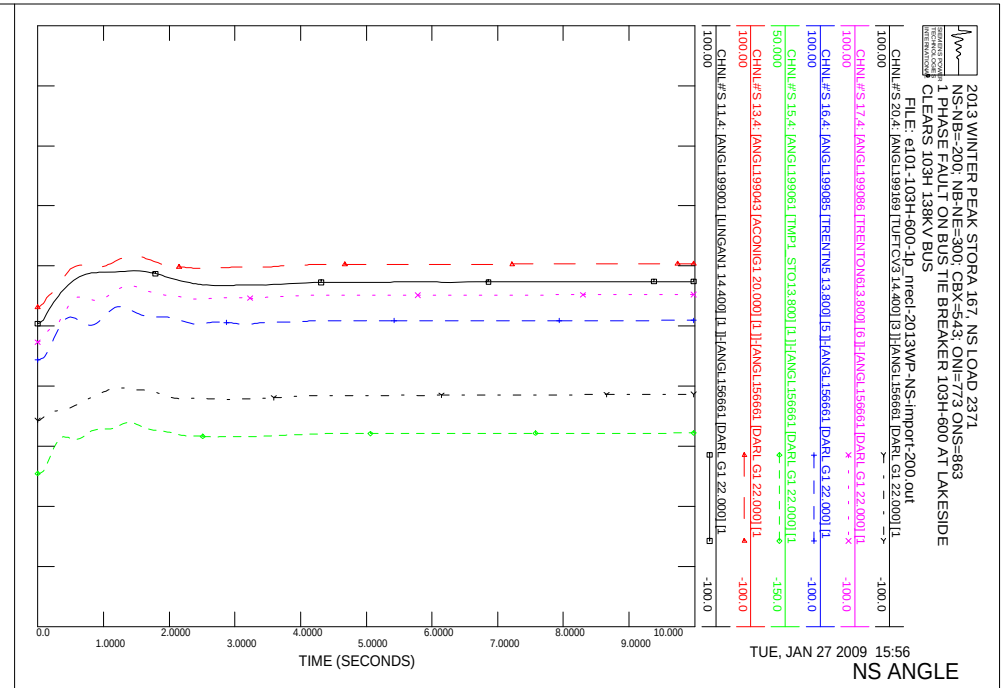
2013 WINTER PEAK STORA 167, NS LOAD 2371
NS-NB=-200; NB-NE=300; CBX=543; ONI=773 ONS=863
1 PHASE FAULT ON BUS TIE BREAKER 103H-600 AT LAKESIDE
CLEARS 103H 138KV BUS
FILE: e101-103H-600-1p_nrecl-2013WP-NS-import-200.out
CHNL#'S 20,4: [ANGL199169 [TUFTCV3 14.400] [3]]-[ANGL156661 [DARL G1 22.000] [1
CHNL#'S 17,4: [ANGL199086 [TRENTON613.800] [6]]-[ANGL156661 [DARL G1 22.000] [1
CHNL#'S 16,4: [ANGL199085 [TRENTN5 13.800] [5]]-[ANGL156661 [DARL G1 22.000] [1
CHNL#'S 15,4: [ANGL199061 [TMP1 STO13.800] [1]]-[ANGL156661 [DARL G1 22.000] [1
CHNL#'S 13,4: [ANGL199043 [ACONIG1 20.000] [1]]-[ANGL156661 [DARL G1 22.000] [1
CHNL#'S 11,4: [ANGL199001 [LINGAN1 14.400] [1]]-[ANGL156661 [DARL G1 22.000] [1
TIME (SECONDS)
TUE, JAN 27 2009 15:56
NS ANGLE

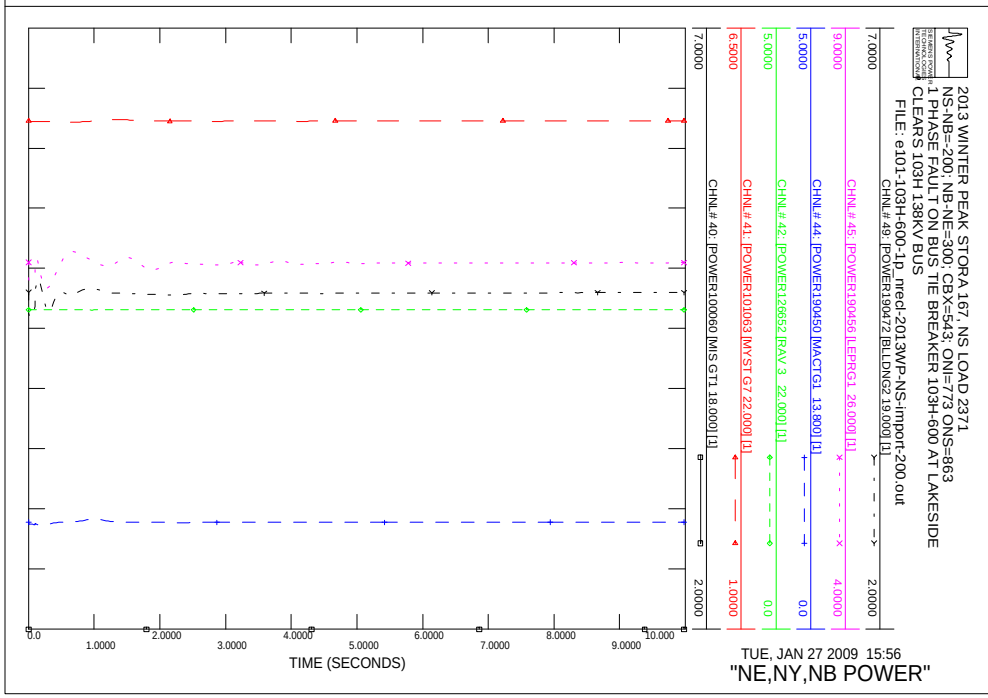
2013 WINTER PEAK STORA 167, NS LOAD 2371
NS-NB=-200; NB-NE=300; CBX=543; ONI=773 ONS=863
1 PHASE FAULT ON BUS TIE BREAKER 103H-600 AT LAKESIDE
CLEARS 103H 138KV BUS
FILE: e101-103H-600-1p_nrecl-2013WP-NS-import-200.out
CHNL# 49: [POWER190472 [BLLDNG2 19.000] [1]]
CHNL# 45: [POWER190456 [LEPRG1 26.000] [1]]
CHNL# 44: [POWER190450 [MACTG1 13.800] [1]]
CHNL# 42: [POWER126652 [RAV 3 22.000] [1]]
CHNL# 41: [POWER101063 [MYST G7 22.000] [1]]
CHNL# 40: [POWER100060 [MIS GT1 18.000] [1]]
TIME (SECONDS)
TUE, JAN 27 2009 15:56
"NE,NY,NB POWER"

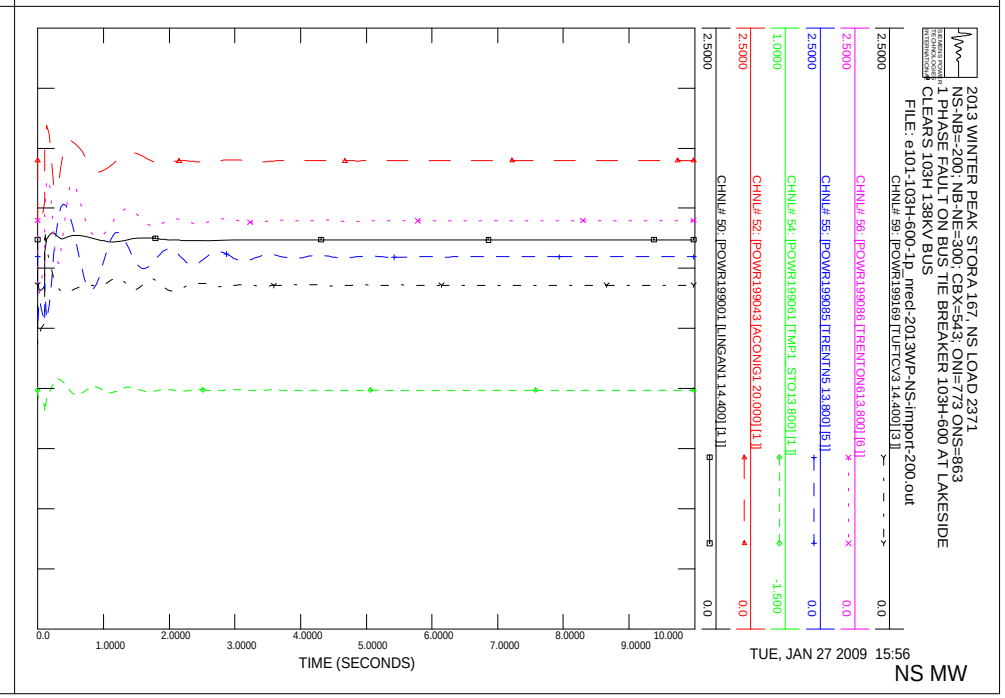
2013 WINTER PEAK STORA 167, NS LOAD 2371
NS-NB=-200; NB-NE=300; CBX=543; ONI=773 ONS=863
1 PHASE FAULT ON BUS TIE BREAKER 103H-600 AT LAKESIDE
CLEARS 103H 138KV BUS
FILE: e101-103H-600-1p_nrecl-2013WP-NS-import-200.out
CHNL# 59: [POWR199169 [TUFTCV3 14.400] [3]]
CHNL# 56: [POWR199086 [TRENTON613.800] [6]]
CHNL# 55: [POWR199085 [TRENTN5 13.800] [5]]
CHNL# 54: [POWR199061 [TMP1 STO13.800] [1]]
CHNL# 52: [POWR199043 [ACONIG1 20.000] [1]]
CHNL# 50: [POWR199001 [LINGAN1 14.400] [1]]
TIME (SECONDS)
TUE, JAN 27 2009 15:56
NS MW

NS WIND MV

NS WIND MW

"345KV VOLTAGE"

FREQUENCY HZ

2013 WINTER PEAK STORA 167, NS LOAD 2371
NS-NB=-200; NB-NE=300; CBX=543; ONI=773 ONS=863
1 PHASE FAULT ON BUS TIE BREAKER 103H-600 AT LAKESIDE
CLEARS 103H 138KV BUS
FILE: e101-103H-600-1p_nrecl-2013WP-NS-import-200.out
CHNL# 146: [VOLT199280 [TUSKET A138.00]]
CHNL# 145: [VOLT199193 [HHWAS 138.00]]
CHNL# 144: [VOLT199165 [TUFTCOVE138.00]]
CHNL# 143: [VOLT199138 [SPRNGHILL138.00]]
CHNL# 142: [VOLT199090 [SON-TREN138.00]]
CHNL# 141: [VOLT199051 [HASTINGS138.00]]
1.2000
0.70000
0.0
1.0000
2.0000
3.0000
4.0000
5.0000
6.0000
7.0000
8.0000
9.0000
10.000
TIME (SECONDS)
TUE, JAN 27 2009 15:56
138KV BUS VOLTS

2013 WINTER PEAK STORA 167, NS LOAD 2371
NS-NB=-200; NB-NE=300; CBX=543; ONI=773 ONS=863
1 PHASE FAULT ON BUS TIE BREAKER 103H-600 AT LAKESIDE
CLEARS 103H 138KV BUS
FILE: e101-103H-600-1p_nrecl-2013WP-NS-import-200.out
CHNL# 140: [VOLT199240 [BWATER A230.00]]
CHNL# 139: [VOLT199200 [BRUSHY 230.00]]
CHNL# 138: [VOLT199130 [ONSLOW 230.00]]
CHNL# 137: [VOLT199050 [HASTINGS230.00]]
CHNL# 136: [VOLT199044 [PT.ACONI230.00]]
CHNL# 135: [VOLT199000 [LINGAN 230.00]]
1.2000
0.70000
0.0
1.0000
2.0000
3.0000
4.0000
5.0000
6.0000
7.0000
8.0000
9.0000
10.000
TIME (SECONDS)
TUE, JAN 27 2009 15:56
230KV BUS VOLTS

2013 WINTER PEAK STORA 167, NS LOAD 2371
NS-NB=-200; NB-NE=300; CBX=543; ONI=773 ONS=863
1 PHASE FAULT ON BUS TIE BREAKER 103H-600 AT LAKESIDE
CLEARS 103H 138KV BUS
FILE: e101-103H-600-1p_nrecl-2013WP-NS-import-200.out
CHNL# 217: [L6533NWM]
CHNL# 215: [L6503MVI]
CHNL# 197: [L8003MVI]
CHNL# 195: [L8004MVI]
CHNL# 193: [L8001MVI]
CHNL# 221: [L3001MVI]
250.00
500.00
1000.0
0.0
-250.0
-1000.
0.0
1.0000
2.0000
3.0000
4.0000
5.0000
6.0000
7.0000
8.0000
9.0000
10.000
TIME (SECONDS)
TUE, JAN 27 2009 15:56
LINE FLOW MW

2013 WINTER PEAK STORA 167, NS LOAD 2371
NS-NB=-200; NB-NE=300; CBX=543; ONI=773 ONS=863
1 PHASE FAULT ON BUS TIE BREAKER 103H-600 AT LAKESIDE
CLEARS 103H 138KV BUS
FILE: e101-103H-600-1p_nrecl-2013WP-NS-import-200.out
CHNL# 154: [IR141-DIGBYH69.0 VOLTS]
CHNL# 153: [IR137-STATIG25.0 VOLTS]
CHNL# 152: [IR114-GLENDH138.0 VOLTS]
CHNL# 151: [IR84-DALHOHV230.0 VOLTS]
CHNL# 150: [IR82_NUTBHV69.0 VOLTS]
CHNL# 149: [IR45_AMHERTP138.0 VOLTS]
1.2000
0.70000
0.0
1.0000
2.0000
3.0000
4.0000
5.0000
6.0000
7.0000
8.0000
9.0000
10.000
TIME (SECONDS)
TUE, JAN 27 2009 15:56
WIND BUS VOLTS

2013 WINTER PEAK STORA 167, NS LOAD 2371
NS-NB=-200; NB-NE=300; CBX=543; ONI=773 ONS=863
1 PHASE FAULT ON BREAKER 47C-602 AT STORA
CLEARS 2 TMP
FILE: e102-47C-602-1p_nrecl-2013WP-NS-import-200.out
CHNL#S 20.4: [ANGL199169 [TUFTCV3 14.400] [3]] [ANGL156661 [DARL G1 22.000] [1
CHNL#S 17.4: [ANGL199086 [TRENTON613.800] [6]] [ANGL156661 [DARL G1 22.000] [1
CHNL#S 16.4: [ANGL199085 [TRENTN5 13.800] [5]] [ANGL156661 [DARL G1 22.000] [1
CHNL#S 15.4: [ANGL199061 [TMP1 STO13.800] [1]] [ANGL156661 [DARL G1 22.000] [1
CHNL#S 13.4: [ANGL199043 [ACONIG1 20.000] [1]] [ANGL156661 [DARL G1 22.000] [1
CHNL#S 11.4: [ANGL199001 [LINGAN1 14.400] [1]] [ANGL156661 [DARL G1 22.000] [1
TIME (SECONDS)
TUE, JAN 27 2009 15:56
NS ANGLE

2013 WINTER PEAK STORA 167, NS LOAD 2371
NS-NB=-200; NB-NE=300; CBX=543; ONI=773 ONS=863
1 PHASE FAULT ON BREAKER 47C-602 AT STORA
CLEARS 2 TMP
FILE: e102-47C-602-1p_nrecl-2013WP-NS-import-200.out
CHNL#S 10.4: [ANGL190472 [BLLDNG2 19.000] [1]] [ANGL156661 [DARL G1 22.000] [1
CHNL#S 6.4: [ANGL190456 [LEPRG1 26.000] [1]] [ANGL156661 [DARL G1 22.000] [1
CHNL#S 5.4: [ANGL190450 [MACTG1 13.800] [1]] [ANGL156661 [DARL G1 22.000] [1
CHNL#S 3.4: [ANGL126652 [RAV 3 22.000] [1]] [ANGL156661 [DARL G1 22.000] [1
CHNL#S 2.4: [ANGL101063 [MYST G7 22.000] [1]] [ANGL156661 [DARL G1 22.000] [1
CHNL#S 1.4: [ANGL100060 [MIS GT1 18.000] [1]] [ANGL156661 [DARL G1 22.000] [1
TIME (SECONDS)
TUE, JAN 27 2009 15:56
"NE,NY,NB ANGLE"

2013 WINTER PEAK STORA 167, NS LOAD 2371
NS-NB=-200; NB-NE=300; CBX=543; ONI=773 ONS=863
1 PHASE FAULT ON BREAKER 47C-602 AT STORA
CLEARS 2 TMP
FILE: e102-47C-602-1p_nrecl-2013WP-NS-import-200.out
CHNL# 59: [POWER199169 [TUFTCV3 14.400] [3]]
CHNL# 56: [POWER199086 [TRENTON613.800] [6]]
CHNL# 55: [POWER199085 [TRENTN5 13.800] [5]]
CHNL# 54: [POWER199061 [TMP1 STO13.800] [1]]
CHNL# 52: [POWER199043 [ACONIG1 20.000] [1]]
CHNL# 50: [POWER199001 [LINGAN1 14.400] [1]]
TIME (SECONDS)
TUE, JAN 27 2009 15:56
NS MW

2013 WINTER PEAK STORA 167, NS LOAD 2371
NS-NB=-200; NB-NE=300; CBX=543; ONI=773 ONS=863
1 PHASE FAULT ON BREAKER 47C-602 AT STORA
CLEARS 2 TMP
FILE: e102-47C-602-1p_nrecl-2013WP-NS-import-200.out
CHNL# 49: [POWER190472 [BLLDNG2 19.000] [1]]
CHNL# 45: [POWER190456 [LEPRG1 26.000] [1]]
CHNL# 44: [POWER190450 [MACTG1 13.800] [1]]
CHNL# 42: [POWER126652 [RAV 3 22.000] [1]]
CHNL# 41: [POWER101063 [MYST G7 22.000] [1]]
CHNL# 40: [POWER100060 [MIS GT1 18.000] [1]]
TIME (SECONDS)
TUE, JAN 27 2009 15:56
"NE,NY,NB POWER"

2013 WINTER PEAK STORA 167, NS LOAD 2371
NS-NB=-200; NB-NE=300; CBX=543; ONI=773 ONS=863
1 PHASE FAULT ON BREAKER 47C-602 AT STORA
CLEARS 2 TMP
FILE: e102-47C-602-1p_nrecl-2013WP-NS-import-200.out
CHNL# 119: [VARS IR141-DIGBY]
CHNL# 118: [VARS IR137-STATIA]
CHNL# 117: [VARS IR114-GLENDHU]
CHNL# 116: [VARS IR84-DALHOUSIE]
CHNL# 115: [VARS IR82_NUTTBY]
CHNL# 114: [VARS IR45_AMHERST]
TIME (SECONDS)
TUE, JAN 27 2009 15:56
NS WIND MV

2013 WINTER PEAK STORA 167, NS LOAD 2371
NS-NB=-200; NB-NE=300; CBX=543; ONI=773 ONS=863
1 PHASE FAULT ON BREAKER 47C-602 AT STORA
CLEARS 2 TMP
FILE: e102-47C-602-1p_nrecl-2013WP-NS-import-200.out
CHNL# 79: [POWER IR141-DIGBY]
CHNL# 78: [POWER IR137-STATIA]
CHNL# 77: [POWER IR114-GLENDHU]
CHNL# 76: [POWER IR84-DALHOUSIE]
CHNL# 75: [POWER IR82_NUTTBY]
CHNL# 74: [POWER IR45_AMHERST]
TIME (SECONDS)
TUE, JAN 27 2009 15:56
NS WIND MW

2013 WINTER PEAK STORA 167, NS LOAD 2371
NS-NB=-200; NB-NE=300; CBX=543; ONI=773 ONS=863
1 PHASE FAULT ON BREAKER 47C-602 AT STORA
CLEARS 2 TMP
FILE: e102-47C-602-1p_nrecl-2013WP-NS-import-200.out
CHNL# 133: [VOLT199125 [ONSLOW 345.00]]
CHNL# 132: [VOLT199120 [HOPEWELL 345.00]]
CHNL# 131: [VOLT199045 [WOODBINE345.00]]
CHNL# 130: [VOLT190320 [SALBRY 345.00]]
CHNL# 128: [VOLT190004 [KESWICK 345.00]]
CHNL# 127: [VOLT 70002 [ORRINGTN345.00]]
TIME (SECONDS)
TUE, JAN 27 2009 15:56
"345KV VOLTAGE"

2013 WINTER PEAK STORA 167, NS LOAD 2371
NS-NB=-200; NB-NE=300; CBX=543; ONI=773 ONS=863
1 PHASE FAULT ON BREAKER 47C-602 AT STORA
CLEARS 2 TMP
FILE: e102-47C-602-1p_nrecl-2013WP-NS-import-200.out
CHNL# 125: 60*(1+[FREQ199125 [ONSLOW 345.00]])
CHNL# 124: 60*(1+[FREQ199120 [HOPEWELL 345.00]])
CHNL# 123: 60*(1+[FREQ199045 [WOODBINE345.00]])
CHNL# 122: 60*(1+[FREQ190320 [SALBRY 345.00]])
CHNL# 121: 60*(1+[FREQ190197 [C.COVE 345.00]])
CHNL# 120: 60*(1+[FREQ 70002 [ORRINGTN345.00]])
TIME (SECONDS)
TUE, JAN 27 2009 15:56
FREQUENCY HZ

2013 WINTER PEAK STORA 167, NS LOAD 2371
NS-NB=-200; NB-NE=300; CBX=543; ONI=773 ONS=863
1 PHASE FAULT ON BREAKER 47C-602 AT STORA
CLEARS 2 TMP
FILE: e102-47C-602-1p_nrecl-2013WP-NS-import-200.out
CHNL# 146: [VOLT199280 [TUSKET A138.00]]
CHNL# 145: [VOLT199193 [HHWAS 138.00]]
CHNL# 144: [VOLT199165 [TUFTCOVE138.00]]
CHNL# 143: [VOLT199138: [SPRNGHILL138.00]]
CHNL# 142: [VOLT199090 [SON-TREN138.00]]
CHNL# 141: [VOLT199051 [HASTINGS138.00]]
TIME (SECONDS)
TUE, JAN 27 2009 15:56
138KV BUS VOLTS

2013 WINTER PEAK STORA 167, NS LOAD 2371
NS-NB=-200; NB-NE=300; CBX=543; ONI=773 ONS=863
1 PHASE FAULT ON BREAKER 47C-602 AT STORA
CLEARS 2 TMP
FILE: e102-47C-602-1p_nrecl-2013WP-NS-import-200.out
CHNL# 140: [VOLT199240 [BWATER A230.00]]
CHNL# 139: [VOLT199200 [BRUSHY 230.00]]
CHNL# 138: [VOLT199130 [ONSLOW 230.00]]
CHNL# 137: [VOLT199050 [HASTINGS230.00]]
CHNL# 136: [VOLT199044 [PT.ACONI230.00]]
CHNL# 135: [VOLT199000 [LINGAN 230.00]]
TIME (SECONDS)
TUE, JAN 27 2009 15:56
230KV BUS VOLTS

2013 WINTER PEAK STORA 167, NS LOAD 2371
NS-NB=-200; NB-NE=300; CBX=543; ONI=773 ONS=863
1 PHASE FAULT ON BREAKER 47C-602 AT STORA
CLEARS 2 TMP
FILE: e102-47C-602-1p_nrecl-2013WP-NS-import-200.out
CHNL# 217: [L6533MW]
CHNL# 215: [L6503MW]
CHNL# 197: [L8003MW]
CHNL# 195: [L8004MW]
CHNL# 193: [L8001MW]
CHNL# 221: [L3001MW]
TIME (SECONDS)
TUE, JAN 27 2009 15:56
LINE FLOW MW

2013 WINTER PEAK STORA 167, NS LOAD 2371
NS-NB=-200; NB-NE=300; CBX=543; ONI=773 ONS=863
1 PHASE FAULT ON BREAKER 47C-602 AT STORA
CLEARS 2 TMP
FILE: e102-47C-602-1p_nrecl-2013WP-NS-import-200.out
CHNL# 154: [IR141-DIGBYH69.0 VOLTS]
CHNL# 153: [IR137-STATIG25.0 VOLTS]
CHNL# 152: [IR114-GLENDH138.0 VOLTS]
CHNL# 151: [IR84-DALHOHV230.0 VOLTS]
CHNL# 150: [IR82-NUTBHV69.0 VOLTS]
CHNL# 149: [IR45-AMHERTP138.0 VOLTS]
TIME (SECONDS)
TUE, JAN 27 2009 15:56
WIND BUS VOLTS

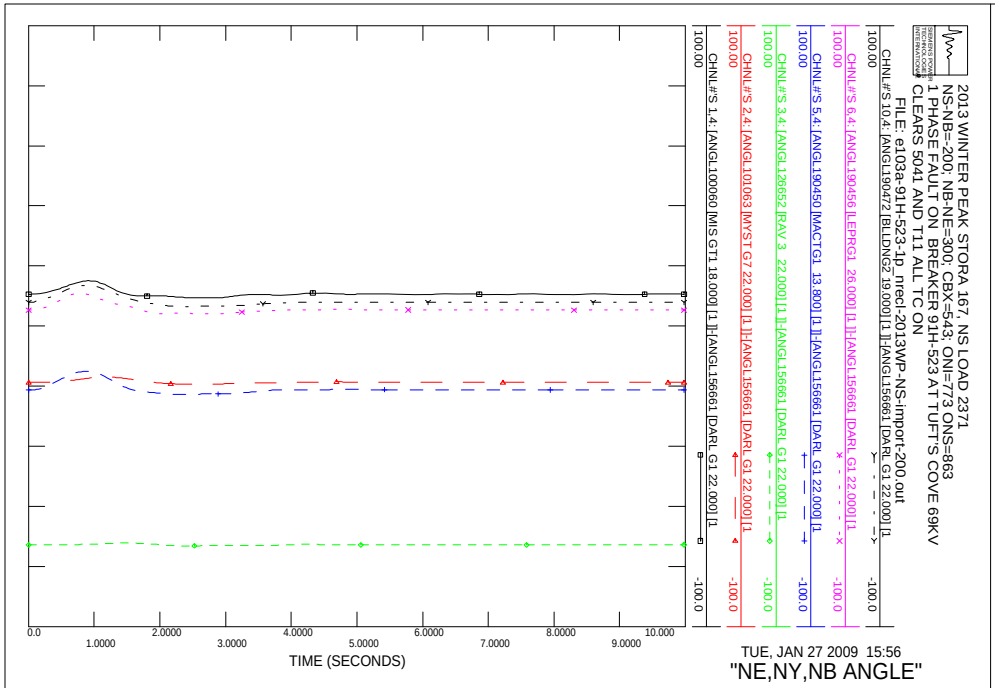
2013 WINTER PEAK STORA 167, NS LOAD 2371
NS-NB=-200; NB-NE=300; CBX=543; ONI=773 ONS=863
1 PHASE FAULT ON BREAKER 91H-523 AT TUFT'S COVE 69KV
CLEARS 5041 AND T11 ALL TC ON
FILE: e103a-91H-523-1p_nrecl-2013WP-NS-import-200.out
CHNL#'S 10,4: [ANGL190472 [BLLDNG2 19.000] [1]]-[ANGL156661 [DARL G1 22.000] [1
CHNL#'S 6,4: [ANGL190456 [LEPRG1 26.000] [1]]-[ANGL156661 [DARL G1 22.000] [1
CHNL#'S 5,4: [ANGL190450 [MACTG1 13.800] [1]]-[ANGL156661 [DARL G1 22.000] [1
CHNL#'S 3,4: [ANGL126652 [RAV 3 22.000] [1]]-[ANGL156661 [DARL G1 22.000] [1
CHNL#'S 2,4: [ANGL101063 [MYST G7 22.000] [1]]-[ANGL156661 [DARL G1 22.000] [1
CHNL#'S 1,4: [ANGL100060 [MIS GT1 18.000] [1]]-[ANGL156661 [DARL G1 22.000] [1
TIME (SECONDS)
TUE, JAN 27 2009 15:56
"NE,NY,NB ANGLE"

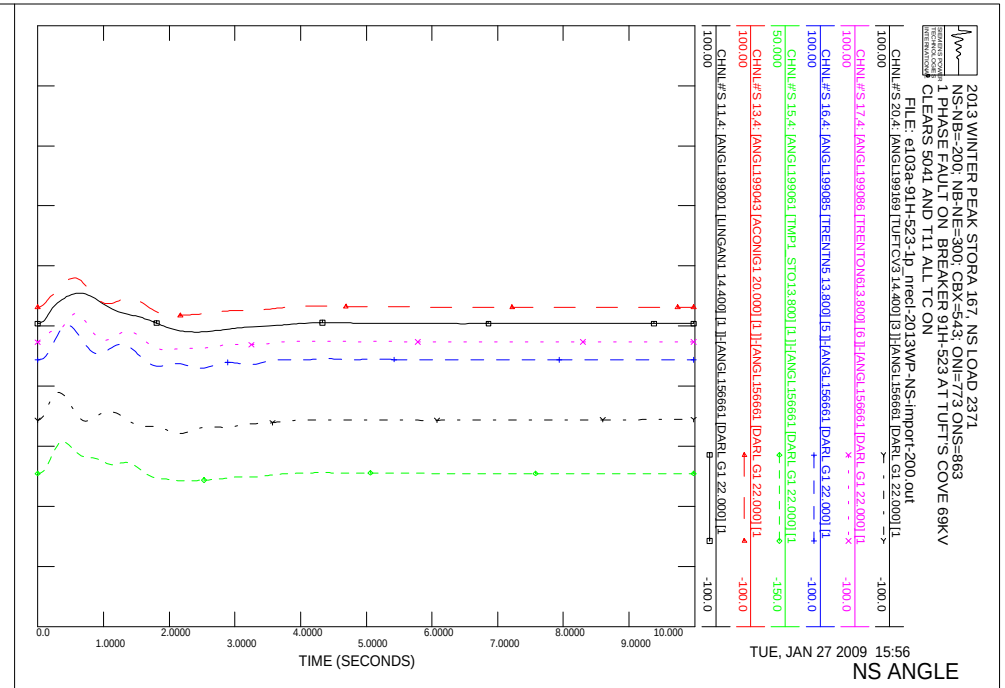
2013 WINTER PEAK STORA 167, NS LOAD 2371
NS-NB=-200; NB-NE=300; CBX=543; ONI=773 ONS=863
1 PHASE FAULT ON BREAKER 91H-523 AT TUFT'S COVE 69KV
CLEARS 5041 AND T11 ALL TC ON
FILE: e103a-91H-523-1p_nrecl-2013WP-NS-import-200.out
CHNL#'S 20,4: [ANGL199169 [TUFTCV3 14.400] [3]]-[ANGL156661 [DARL G1 22.000] [1
CHNL#'S 17,4: [ANGL199086 [TRENTON613.800] [6]]-[ANGL156661 [DARL G1 22.000] [1
CHNL#'S 16,4: [ANGL199085 [TRENTN5 13.800] [5]]-[ANGL156661 [DARL G1 22.000] [1
CHNL#'S 15,4: [ANGL199061 [TMP1 STO13.800] [1]]-[ANGL156661 [DARL G1 22.000] [1
CHNL#'S 13,4: [ANGL199043 [ACONIG1 20.000] [1]]-[ANGL156661 [DARL G1 22.000] [1
CHNL#'S 11,4: [ANGL199001 [LINGAN1 14.400] [1]]-[ANGL156661 [DARL G1 22.000] [1
TIME (SECONDS)
TUE, JAN 27 2009 15:56
NS ANGLE

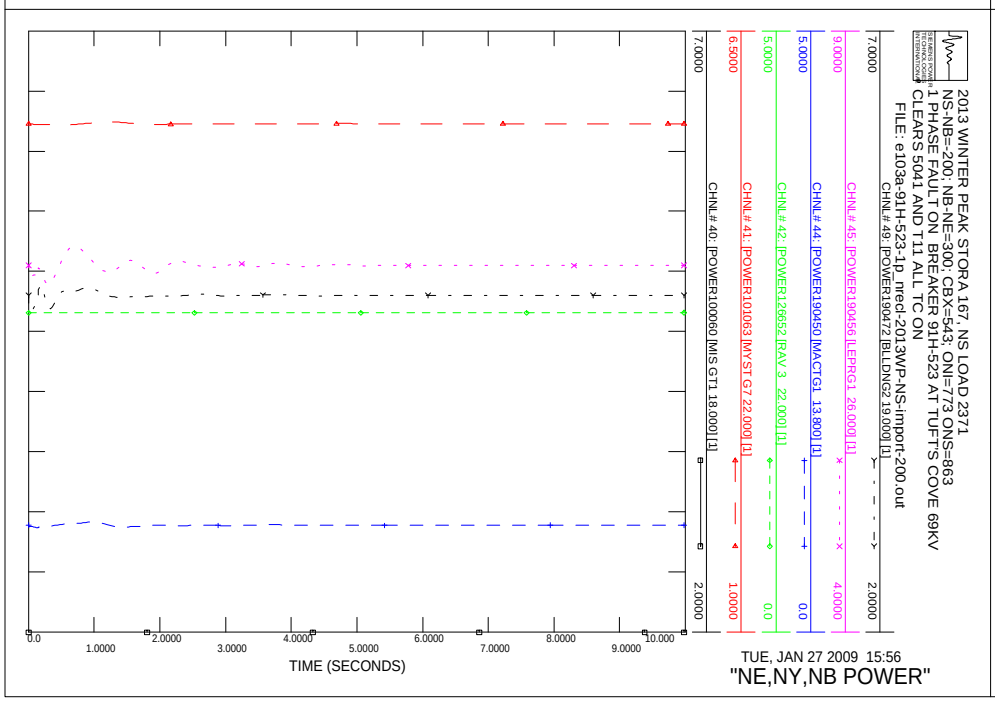
2013 WINTER PEAK STORA 167, NS LOAD 2371
NS-NB=-200; NB-NE=300; CBX=543; ONI=773 ONS=863
1 PHASE FAULT ON BREAKER 91H-523 AT TUFT'S COVE 69KV
CLEARS 5041 AND T11 ALL TC ON
FILE: e103a-91H-523-1p_nrecl-2013WP-NS-import-200.out
CHNL# 49: [POWER190472 [BLLDNG2 19.000] [1]]
CHNL# 45: [POWER190456 [LEPRG1 26.000] [1]]
CHNL# 44: [POWER190450 [MACTG1 13.800] [1]]
CHNL# 42: [POWER126652 [RAV 3 22.000] [1]]
CHNL# 41: [POWER101063 [MYST G7 22.000] [1]]
CHNL# 40: [POWER100060 [MIS GT1 18.000] [1]]
TIME (SECONDS)
TUE, JAN 27 2009 15:56
"NE,NY,NB POWER"

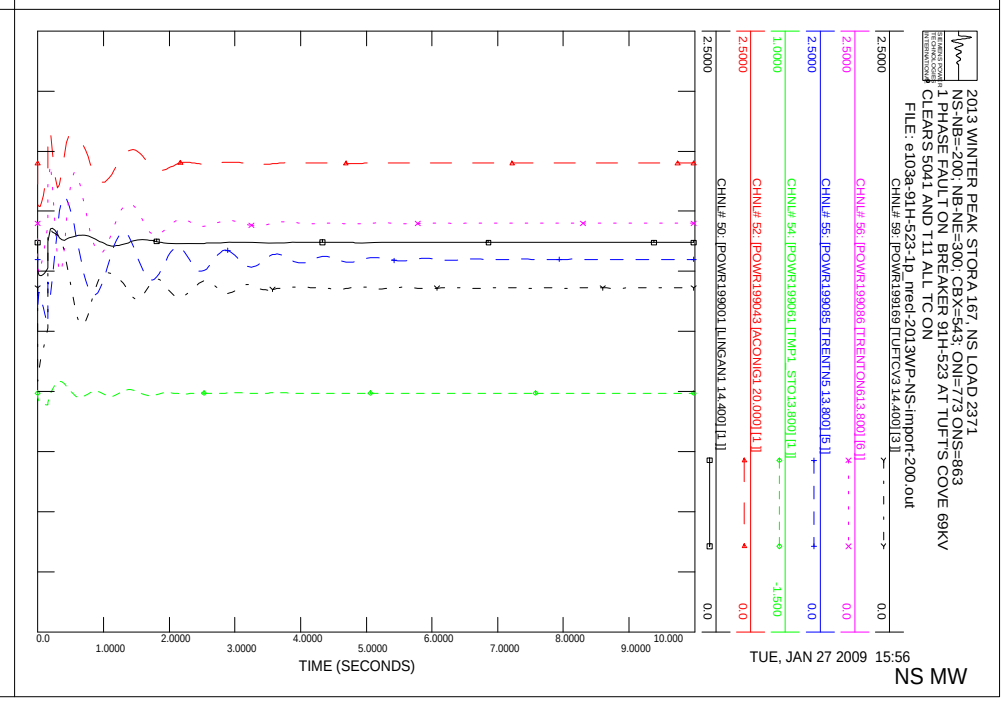
2013 WINTER PEAK STORA 167, NS LOAD 2371
NS-NB=-200; NB-NE=300; CBX=543; ONI=773 ONS=863
1 PHASE FAULT ON BREAKER 91H-523 AT TUFT'S COVE 69KV
CLEARS 5041 AND T11 ALL TC ON
FILE: e103a-91H-523-1p_nrecl-2013WP-NS-import-200.out
CHNL# 59: [POWR199169 [TUFTCV3 14.400] [3]]
CHNL# 56: [POWR199086 [TRENTON613.800] [6]]
CHNL# 55: [POWR199085 [TRENTN5 13.800] [5]]
CHNL# 54: [POWR199061 [TMP1 STO13.800] [1]]
CHNL# 52: [POWR199043 [ACONIG1 20.000] [1]]
CHNL# 50: [POWR199001 [LINGAN1 14.400] [1]]
TIME (SECONDS)
TUE, JAN 27 2009 15:56
NS MW

2013 WINTER PEAK STORA 167, NS LOAD 2371
NS-NB=-200; NB-NE=300; CBX=543; ONI=773 ONS=863
1 PHASE FAULT ON BREAKER 91H-523 AT TUFT'S COVE 69KV
CLEARS 5041 AND T11 ALL TC ON
FILE: e103a-91H-523-1p_nrecl-2013WP-NS-import-200.out
CHNL# 119: [VARS IR141-DIGBY]
CHNL# 118: [VARS IR137-STATIA]
CHNL# 117: [VARS IR114-GLENDHU]
CHNL# 116: [VARS IR84-DALHOUSIE]
CHNL# 115: [VARS IR82_NUTTBY]
CHNL# 114: [VARS IR45_AMHERST]
0.50000
-0.5000
TIME (SECONDS)
TUE, JAN 27 2009 15:56
NS WIND MV

2013 WINTER PEAK STORA 167, NS LOAD 2371
NS-NB=-200; NB-NE=300; CBX=543; ONI=773 ONS=863
1 PHASE FAULT ON BREAKER 91H-523 AT TUFT'S COVE 69KV
CLEARS 5041 AND T11 ALL TC ON
FILE: e103a-91H-523-1p_nrecl-2013WP-NS-import-200.out
CHNL# 79: [POWER IR141-DIGBY]
CHNL# 78: [POWER IR137-STATIA]
CHNL# 77: [POWER IR114-GLENDHU]
CHNL# 76: [POWER IR84-DALHOUSIE]
CHNL# 75: [POWER IR82_NUTTBY]
CHNL# 74: [POWER IR45_AMHERST]
1.0000
0.0
TIME (SECONDS)
TUE, JAN 27 2009 15:56
NS WIND MW

2013 WINTER PEAK STORA 167, NS LOAD 2371
NS-NB=-200; NB-NE=300; CBX=543; ONI=773 ONS=863
1 PHASE FAULT ON BREAKER 91H-523 AT TUFT'S COVE 69KV
CLEARS 5041 AND T11 ALL TC ON
FILE: e103a-91H-523-1p_nrecl-2013WP-NS-import-200.out
CHNL# 133: [VOLT199125 [ONSLOW 345.00]]
CHNL# 132: [VOLT199120 [HOPEWELL 345.00]]
CHNL# 131: [VOLT199045 [WOODBINE345.00]]
CHNL# 130: [VOLT190320 [SALBRY 345.00]]
CHNL# 128: [VOLT190004 [KESWICK 345.00]]
CHNL# 127: [VOLT 70002 [ORRINGTN345.00]]
1.1000
0.90000
TIME (SECONDS)
TUE, JAN 27 2009 15:56
"345KV VOLTAGE"

2013 WINTER PEAK STORA 167, NS LOAD 2371
NS-NB=-200; NB-NE=300; CBX=543; ONI=773 ONS=863
1 PHASE FAULT ON BREAKER 91H-523 AT TUFT'S COVE 69KV
CLEARS 5041 AND T11 ALL TC ON
FILE: e103a-91H-523-1p_nrecl-2013WP-NS-import-200.out
CHNL# 125: 60*(1+[FREQ199125 [ONSLOW 345.00]])
CHNL# 124: 60*(1+[FREQ199120 [HOPEWELL 345.00]])
CHNL# 123: 60*(1+[FREQ199045 [WOODBINE345.00]])
CHNL# 122: 60*(1+[FREQ190320 [SALBRY 345.00]])
CHNL# 121: 60*(1+[FREQ190197 [C.COVE 345.00]])
CHNL# 120: 60*(1+[FREQ 70002 [ORRINGTN345.00]])
60.500
59.500
TIME (SECONDS)
TUE, JAN 27 2009 15:56
FREQUENCY HZ

2013 WINTER PEAK STORA 167, NS LOAD 2371
NS-NB=-200; NB-NE=300; CBX=543; ONI=773 ONS=863
1 PHASE FAULT ON BREAKER 91H-523 AT TUFT'S COVE 69KV
CLEARS 5041 AND T11 ALL TC ON
FILE: e103a-91H-523-1p_nrecl-2013WP-NS-import-200.out
CHNL# 146: [VOLT199280 [TUSKET A138.00]]
CHNL# 145: [VOLT199193 [HHWAS 138.00]]
CHNL# 144: [VOLT199165 [TUFT COVE138.00]]
CHNL# 143: [VOLT199138 [SPRNGHILL138.00]]
CHNL# 142: [VOLT199090 [50N-TREN138.00]]
CHNL# 141: [VOLT199051 [HASTINGS138.00]]
TIME (SECONDS)
TUE, JAN 27 2009 15:56
138KV BUS VOLTS

2013 WINTER PEAK STORA 167, NS LOAD 2371
NS-NB=-200; NB-NE=300; CBX=543; ONI=773 ONS=863
1 PHASE FAULT ON BREAKER 91H-523 AT TUFT'S COVE 69KV
CLEARS 5041 AND T11 ALL TC ON
FILE: e103a-91H-523-1p_nrecl-2013WP-NS-import-200.out
CHNL# 140: [VOLT199240 [BWATER A230.00]]
CHNL# 139: [VOLT199200 [BRUSHY 230.00]]
CHNL# 138: [VOLT199130 [ONSLOW 230.00]]
CHNL# 137: [VOLT199050 [HASTINGS230.00]]
CHNL# 136: [VOLT199044 [PT.ACONI230.00]]
CHNL# 135: [VOLT199000 [LINGAN 230.00]]
TIME (SECONDS)
TUE, JAN 27 2009 15:56
230KV BUS VOLTS

2013 WINTER PEAK STORA 167, NS LOAD 2371
NS-NB=-200; NB-NE=300; CBX=543; ONI=773 ONS=863
1 PHASE FAULT ON BREAKER 91H-523 AT TUFT'S COVE 69KV
CLEARS 5041 AND T11 ALL TC ON
FILE: e103a-91H-523-1p_nrecl-2013WP-NS-import-200.out
CHNL# 217: [L6533MW]
CHNL# 215: [L6503MW]
CHNL# 197: [L8003MW]
CHNL# 195: [L8004MW]
CHNL# 193: [L8001MW]
CHNL# 221: [L3001MW]
TIME (SECONDS)
TUE, JAN 27 2009 15:56
LINE FLOW MW

2013 WINTER PEAK STORA 167, NS LOAD 2371
NS-NB=-200; NB-NE=300; CBX=543; ONI=773 ONS=863
1 PHASE FAULT ON BREAKER 91H-523 AT TUFT'S COVE 69KV
CLEARS 5041 AND T11 ALL TC ON
FILE: e103a-91H-523-1p_nrecl-2013WP-NS-import-200.out
CHNL# 154: [IR141-DIGBYH69.0 VOLTS]
CHNL# 153: [IR137-STATIG25.0 VOLTS]
CHNL# 152: [IR114-GLENDH138.0 VOLTS]
CHNL# 151: [IR84-DALHOHV230.0 VOLTS]
CHNL# 150: [IR82-NUTBHV69.0 VOLTS]
CHNL# 149: [IR45-AMHERTP138.0 VOLTS]
TIME (SECONDS)
TUE, JAN 27 2009 15:56
WIND BUS VOLTS

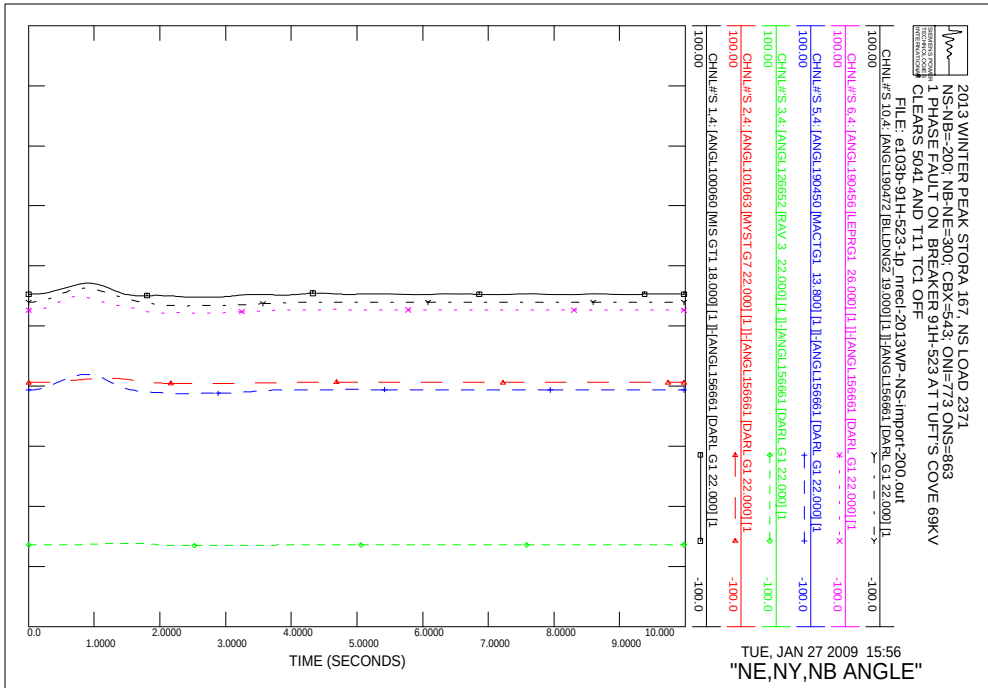
2013 WINTER PEAK STORA 167, NS LOAD 2371
NS-NB=-200; NB-NE=300; CBX=543; ONI=773 ONS=863
1 PHASE FAULT ON BREAKER 91H-523 AT TUFT'S COVE 69KV
CLEARS 5041 AND T11 TC1 OFF
FILE: e103b-91H-523-1p_nrecl-2013WP-NS-import-200.out
CHNL#'S 10,4: [ANGL190472 [BLLDNG2 19.000] [1]]-[ANGL156661 [DARL G1 22.000] [1
CHNL#'S 6,4: [ANGL190456 [LEPRG1 26.000] [1]]-[ANGL156661 [DARL G1 22.000] [1
CHNL#'S 5,4: [ANGL190450 [MACTG1 13.800] [1]]-[ANGL156661 [DARL G1 22.000] [1
CHNL#'S 3,4: [ANGL126652 [RAV 3 22.000] [1]]-[ANGL156661 [DARL G1 22.000] [1
CHNL#'S 2,4: [ANGL101063 [MYST G7 22.000] [1]]-[ANGL156661 [DARL G1 22.000] [1
CHNL#'S 1,4: [ANGL100060 [MIS GT1 18.000] [1]]-[ANGL156661 [DARL G1 22.000] [1
100.00
-100.0
TIME (SECONDS)
TUE, JAN 27 2009 15:56
"NE,NY,NB ANGLE"

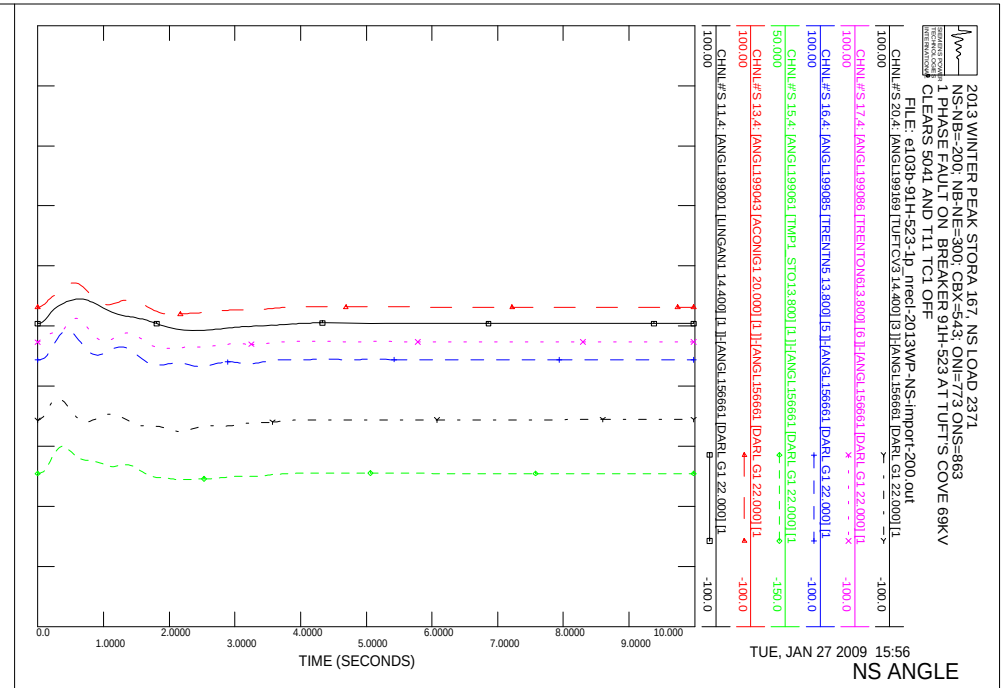
2013 WINTER PEAK STORA 167, NS LOAD 2371
NS-NB=-200; NB-NE=300; CBX=543; ONI=773 ONS=863
1 PHASE FAULT ON BREAKER 91H-523 AT TUFT'S COVE 69KV
CLEARS 5041 AND T11 TC1 OFF
FILE: e103b-91H-523-1p_nrecl-2013WP-NS-import-200.out
CHNL#'S 20,4: [ANGL199169 [TUFTCV3 14.400] [3]]-[ANGL156661 [DARL G1 22.000] [1
CHNL#'S 17,4: [ANGL199086 [TRENTON613.800] [6]]-[ANGL156661 [DARL G1 22.000] [1
CHNL#'S 16,4: [ANGL199085 [TRENTN5 13.800] [5]]-[ANGL156661 [DARL G1 22.000] [1
CHNL#'S 15,4: [ANGL199061 [TMP1 STO13.800] [1]]-[ANGL156661 [DARL G1 22.000] [1
CHNL#'S 13,4: [ANGL199043 [ACONIG1 20.000] [1]]-[ANGL156661 [DARL G1 22.000] [1
CHNL#'S 11,4: [ANGL199001 [LINGAN1 14.400] [1]]-[ANGL156661 [DARL G1 22.000] [1
100.00
-100.0
-150.0
TIME (SECONDS)
TUE, JAN 27 2009 15:56
NS ANGLE

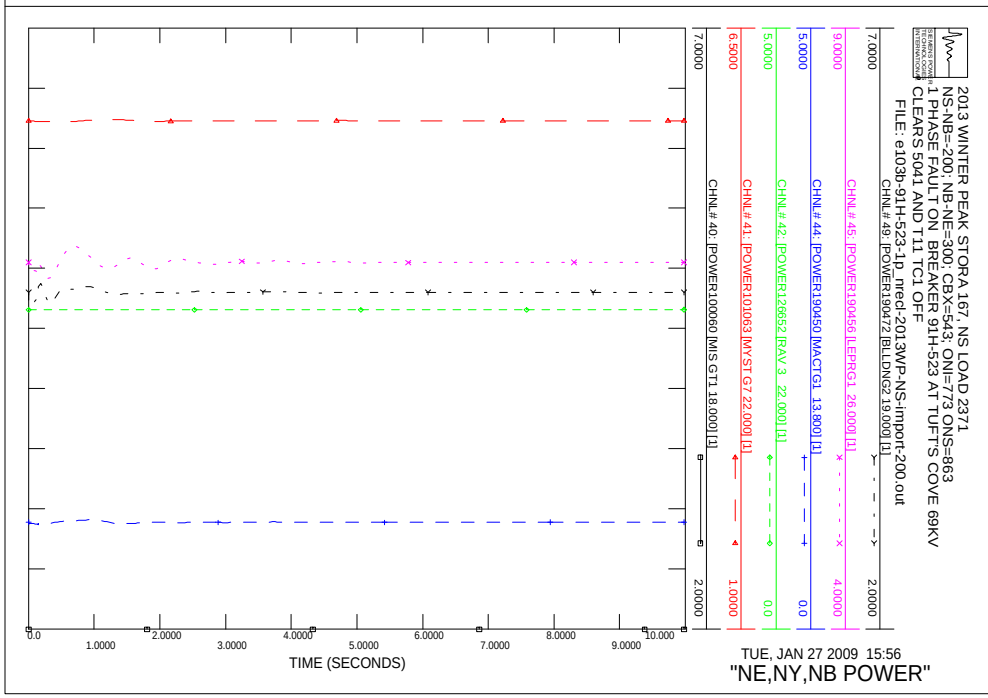
2013 WINTER PEAK STORA 167, NS LOAD 2371
NS-NB=-200; NB-NE=300; CBX=543; ONI=773 ONS=863
1 PHASE FAULT ON BREAKER 91H-523 AT TUFT'S COVE 69KV
CLEARS 5041 AND T11 TC1 OFF
FILE: e103b-91H-523-1p_nrecl-2013WP-NS-import-200.out
CHNL# 49: [POWER190472 [BLLDNG2 19.000] [1]]
CHNL# 45: [POWER190456 [LEPRG1 26.000] [1]]
CHNL# 44: [POWER190450 [MACTG1 13.800] [1]]
CHNL# 42: [POWER126652 [RAV 3 22.000] [1]]
CHNL# 41: [POWER101063 [MYST G7 22.000] [1]]
CHNL# 40: [POWER100060 [MIS GT1 18.000] [1]]
7.0000
2.0000
6.5000
1.0000
5.0000
0.0
4.0000
TIME (SECONDS)
TUE, JAN 27 2009 15:56
"NE,NY,NB POWER"

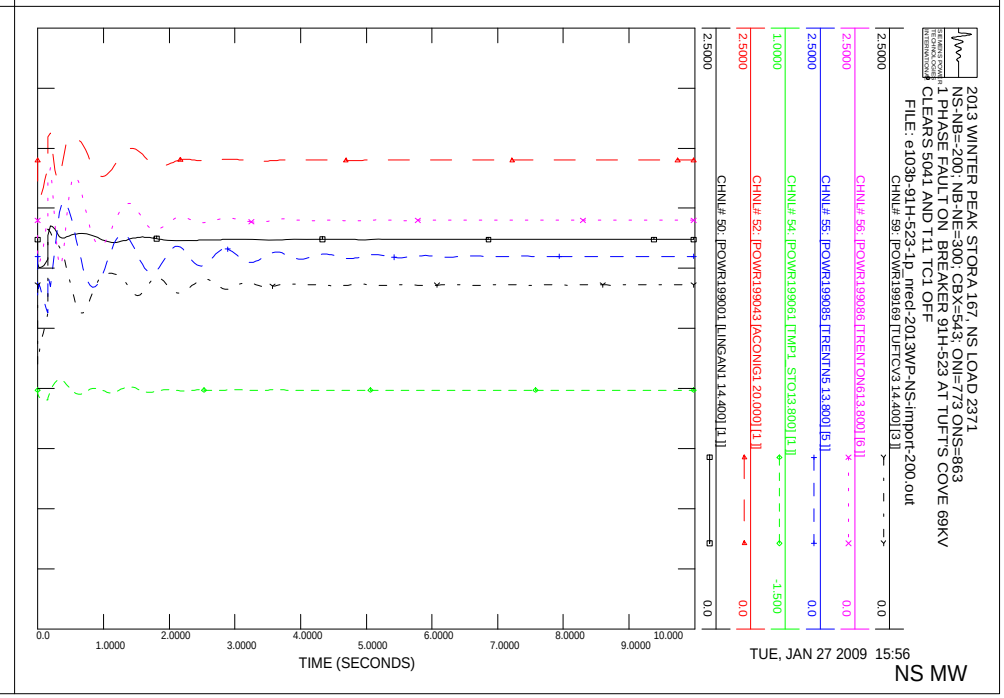
2013 WINTER PEAK STORA 167, NS LOAD 2371
NS-NB=-200; NB-NE=300; CBX=543; ONI=773 ONS=863
1 PHASE FAULT ON BREAKER 91H-523 AT TUFT'S COVE 69KV
CLEARS 5041 AND T11 TC1 OFF
FILE: e103b-91H-523-1p_nrecl-2013WP-NS-import-200.out
CHNL# 59: [POWR199169 [TUFTCV3 14.400] [3]]
CHNL# 56: [POWR199086 [TRENTON613.800] [6]]
CHNL# 55: [POWR199085 [TRENTN5 13.800] [5]]
CHNL# 54: [POWR199061 [TMP1 STO13.800] [1]]
CHNL# 52: [POWR199043 [ACONIG1 20.000] [1]]
CHNL# 50: [POWR199001 [LINGAN1 14.400] [1]]
2.5000
0.0
-1.500
TIME (SECONDS)
TUE, JAN 27 2009 15:56
NS MW

2013 WINTER PEAK STORA 167, NS LOAD 2371
NS-NB=-200; NB-NE=300; CBX=543; ONI=773 ONS=863
1 PHASE FAULT ON BREAKER 91H-523 AT TUFT'S COVE 69KV
CLEARS 5041 AND T11 TC1 OFF
FILE: e103b-91H-523-1p_nrect-2013WP-NS-import-200.out
CHNL# 119: [VARS IR141-DIGBY] 0.50000 -0.5000
CHNL# 118: [VARS IR137-STATIA] 0.50000 -0.5000
CHNL# 117: [VARS IR114-GLENDHU] 0.50000 -0.5000
CHNL# 116: [VARS IR84-DALHOUSIE] 0.50000 -0.5000
CHNL# 115: [VARS IR82_NUTTBY] 0.50000 -0.5000
CHNL# 114: [VARS IR45_AMHERST] 0.50000 -0.5000
0.0 1.0000 2.0000 3.0000 4.0000 5.0000 6.0000 7.0000 8.0000 9.0000 10.000
TIME (SECONDS)
TUE, JAN 27 2009 15:56
NS WIND MV

2013 WINTER PEAK STORA 167, NS LOAD 2371
NS-NB=-200; NB-NE=300; CBX=543; ONI=773 ONS=863
1 PHASE FAULT ON BREAKER 91H-523 AT TUFT'S COVE 69KV
CLEARS 5041 AND T11 TC1 OFF
FILE: e103b-91H-523-1p_nrect-2013WP-NS-import-200.out
CHNL# 79: [POWER IR141-DIGBY] 1.0000 0.0
CHNL# 78: [POWER IR137-STATIA] 1.0000 0.0
CHNL# 77: [POWER IR114-GLENDHU] 1.0000 0.0
CHNL# 76: [POWER IR84-DALHOUSIE] 1.0000 0.0
CHNL# 75: [POWER IR82_NUTTBY] 1.0000 0.0
CHNL# 74: [POWER IR45_AMHERST] 1.0000 0.0
0.0 1.0000 2.0000 3.0000 4.0000 5.0000 6.0000 7.0000 8.0000 9.0000 10.000
TIME (SECONDS)
TUE, JAN 27 2009 15:56
NS WIND MW

2013 WINTER PEAK STORA 167, NS LOAD 2371
NS-NB=-200; NB-NE=300; CBX=543; ONI=773 ONS=863
1 PHASE FAULT ON BREAKER 91H-523 AT TUFT'S COVE 69KV
CLEARS 5041 AND T11 TC1 OFF
FILE: e103b-91H-523-1p_nrect-2013WP-NS-import-200.out
CHNL# 133: [VOLT199125 [ONSLOW 345.00]] 1.1000 0.90000
CHNL# 132: [VOLT199120 [HOPEWELL 345.00]] 1.1000 0.90000
CHNL# 131: [VOLT199045 [WOODBINE345.00]] 1.1000 0.90000
CHNL# 130: [VOLT190320 [SALBRY 345.00]] 1.1000 0.90000
CHNL# 128: [VOLT190004 [KESWICK 345.00]] 1.1000 0.90000
CHNL# 127: [VOLT 70002 [ORRINGTN345.00]] 1.1000 0.90000
0.0 1.0000 2.0000 3.0000 4.0000 5.0000 6.0000 7.0000 8.0000 9.0000 10.000
TIME (SECONDS)
TUE, JAN 27 2009 15:56
"345KV VOLTAGE"

2013 WINTER PEAK STORA 167, NS LOAD 2371
NS-NB=-200; NB-NE=300; CBX=543; ONI=773 ONS=863
1 PHASE FAULT ON BREAKER 91H-523 AT TUFT'S COVE 69KV
CLEARS 5041 AND T11 TC1 OFF
FILE: e103b-91H-523-1p_nrect-2013WP-NS-import-200.out
CHNL# 125: 60*(1+[FREQ199125 [ONSLOW 345.00]]) 60.500 59.500
CHNL# 124: 60*(1+[FREQ199120 [HOPEWELL 345.00]]) 60.500 59.500
CHNL# 123: 60*(1+[FREQ199045 [WOODBINE345.00]]) 60.500 59.500
CHNL# 122: 60*(1+[FREQ190320 [SALBRY 345.00]]) 60.500 59.500
CHNL# 121: 60*(1+[FREQ190197 [C.COVE 345.00]]) 60.500 59.500
CHNL# 120: 60*(1+[FREQ 70002 [ORRINGTN345.00]]) 60.500 59.500
0.0 1.0000 2.0000 3.0000 4.0000 5.0000 6.0000 7.0000 8.0000 9.0000 10.000
TIME (SECONDS)
TUE, JAN 27 2009 15:56
FREQUENCY HZ

2013 WINTER PEAK STORA 167, NS LOAD 2371
NS-NB=-200; NB-NE=300; CBX=543; ONI=773 ONS=863
1 PHASE FAULT ON BREAKER 91H-523 AT TUFT'S COVE 69KV
CLEARS 5041 AND T11 TC1 OFF
FILE: e103b-91H-523-1p_nrec1-2013WP-NS-import-200.out
CHNL# 146: [VOLT199280 [TUSKET A138.00]]
CHNL# 145: [VOLT199193 [1H-WAS 138.00]]
CHNL# 144: [VOLT199165 [TUFT COVE138.00]]
CHNL# 143: [VOLT199135 [SPRNGHILL138.00]]
CHNL# 142: [VOLT199090 [50N-TREN138.00]]
CHNL# 141: [VOLT199051 [HASTINGS138.00]]
1.2000
0.70000
0.0
1.0000
2.0000
3.0000
4.0000
5.0000
6.0000
7.0000
8.0000
9.0000
10.0000
TIME (SECONDS)
TUE, JAN 27 2009 15:56
138KV BUS VOLTS

2013 WINTER PEAK STORA 167, NS LOAD 2371
NS-NB=-200; NB-NE=300; CBX=543; ONI=773 ONS=863
1 PHASE FAULT ON BREAKER 91H-523 AT TUFT'S COVE 69KV
CLEARS 5041 AND T11 TC1 OFF
FILE: e103b-91H-523-1p_nrec1-2013WP-NS-import-200.out
CHNL# 140: [VOLT199240 [BWATER A230.00]]
CHNL# 139: [VOLT199200 [BRUSHY 230.00]]
CHNL# 138: [VOLT199130 [ONSLOW 230.00]]
CHNL# 137: [VOLT199050 [HASTINGS230.00]]
CHNL# 136: [VOLT199044 [PT.ACONI230.00]]
CHNL# 135: [VOLT199000 [LINGAN 230.00]]
1.2000
0.70000
0.0
1.0000
2.0000
3.0000
4.0000
5.0000
6.0000
7.0000
8.0000
9.0000
10.0000
TIME (SECONDS)
TUE, JAN 27 2009 15:56
230KV BUS VOLTS

2013 WINTER PEAK STORA 167, NS LOAD 2371
NS-NB=-200; NB-NE=300; CBX=543; ONI=773 ONS=863
1 PHASE FAULT ON BREAKER 91H-523 AT TUFT'S COVE 69KV
CLEARS 5041 AND T11 TC1 OFF
FILE: e103b-91H-523-1p_nrec1-2013WP-NS-import-200.out
CHNL# 217: [L6533MW]
CHNL# 215: [L6503MW]
CHNL# 197: [L8003MW]
CHNL# 195: [L8004MW]
CHNL# 193: [L8001MW]
CHNL# 221: [L3001MW]
250.00
500.00
1000.0
0.0
-250.0
-1000.
0.0
1.0000
2.0000
3.0000
4.0000
5.0000
6.0000
7.0000
8.0000
9.0000
10.0000
TIME (SECONDS)
TUE, JAN 27 2009 15:56
LINE FLOW MW

2013 WINTER PEAK STORA 167, NS LOAD 2371
NS-NB=-200; NB-NE=300; CBX=543; ONI=773 ONS=863
1 PHASE FAULT ON BREAKER 91H-523 AT TUFT'S COVE 69KV
CLEARS 5041 AND T11 TC1 OFF
FILE: e103b-91H-523-1p_nrec1-2013WP-NS-import-200.out
CHNL# 154: [IR141-DIGBYH69.0 VOLTS]
CHNL# 153: [IR137-STATIG25.0 VOLTS]
CHNL# 152: [IR114-GLENDH138.0 VOLTS]
CHNL# 151: [IR84-DALHOHV230.0 VOLTS]
CHNL# 150: [IR82-NUTBHV69.0 VOLTS]
CHNL# 149: [IR45-AMHERTP138.0 VOLTS]
1.2000
0.70000
0.0
1.0000
2.0000
3.0000
4.0000
5.0000
6.0000
7.0000
8.0000
9.0000
10.0000
TIME (SECONDS)
TUE, JAN 27 2009 15:56
WIND BUS VOLTS

2013 WINTER PEAK STORA 167, NS LOAD 2371
NS-NB=-200; NB-NE=300; CBX=543; ONI=773 ONS=863
1 PHASE FAULT ON BREAKER 91H-523 AT TUFT'S COVE 69KV
CLEARS 5041 AND T11 TC1 AND 2 OFF
FILE: e103c-91H-523-1p_nrect-2013WP-NS-import-200.out
CHNL# 20: [ANGL199169 [TUFTCV3 14.400] [3]] [ANGL156661 [DARL G1 22.000] [1]
CHNL# 17: [ANGL199086 [TRENTON613.800] [6]] [ANGL156661 [DARL G1 22.000] [1]
CHNL# 16: [ANGL199085 [TRENTN5 13.800] [5]] [ANGL156661 [DARL G1 22.000] [1]
CHNL# 15: [ANGL199061 [TMP1 STO13.800] [1]] [ANGL156661 [DARL G1 22.000] [1]
CHNL# 13: [ANGL199043 [ACONIG1 20.000] [1]] [ANGL156661 [DARL G1 22.000] [1]
CHNL# 11: [ANGL199001 [LINGAN1 14.400] [1]] [ANGL156661 [DARL G1 22.000] [1]
TIME (SECONDS)
TUE, JAN 27 2009 15:56
NS ANGLE

2013 WINTER PEAK STORA 167, NS LOAD 2371
NS-NB=-200; NB-NE=300; CBX=543; ONI=773 ONS=863
1 PHASE FAULT ON BREAKER 91H-523 AT TUFT'S COVE 69KV
CLEARS 5041 AND T11 TC1 AND 2 OFF
FILE: e103c-91H-523-1p_nrect-2013WP-NS-import-200.out
CHNL# 10: [ANGL190472 [BLLDNG2 19.000] [1]] [ANGL156661 [DARL G1 22.000] [1]
CHNL# 6: [ANGL190456 [LEPRG1 26.000] [1]] [ANGL156661 [DARL G1 22.000] [1]
CHNL# 5: [ANGL190450 [MACTG1 13.800] [1]] [ANGL156661 [DARL G1 22.000] [1]
CHNL# 3: [ANGL126652 [RAV 3 22.000] [1]] [ANGL156661 [DARL G1 22.000] [1]
CHNL# 2: [ANGL101063 [MYST G7 22.000] [1]] [ANGL156661 [DARL G1 22.000] [1]
CHNL# 1: [ANGL100060 [MIS GT1 18.000] [1]] [ANGL156661 [DARL G1 22.000] [1]
TIME (SECONDS)
TUE, JAN 27 2009 15:56
"NE,NY,NB ANGLE"

2013 WINTER PEAK STORA 167, NS LOAD 2371
NS-NB=-200; NB-NE=300; CBX=543; ONI=773 ONS=863
1 PHASE FAULT ON BREAKER 91H-523 AT TUFT'S COVE 69KV
CLEARS 5041 AND T11 TC1 AND 2 OFF
FILE: e103c-91H-523-1p_nrect-2013WP-NS-import-200.out
CHNL# 59: [POWER199169 [TUFTCV3 14.400] [3]]
CHNL# 56: [POWER199086 [TRENTON613.800] [6]]
CHNL# 55: [POWER199085 [TRENTN5 13.800] [5]]
CHNL# 54: [POWER199061 [TMP1 STO13.800] [1]]
CHNL# 52: [POWER199043 [ACONIG1 20.000] [1]]
CHNL# 50: [POWER199001 [LINGAN1 14.400] [1]]
TIME (SECONDS)
TUE, JAN 27 2009 15:56
NS MW

2013 WINTER PEAK STORA 167, NS LOAD 2371
NS-NB=-200; NB-NE=300; CBX=543; ONI=773 ONS=863
1 PHASE FAULT ON BREAKER 91H-523 AT TUFT'S COVE 69KV
CLEARS 5041 AND T11 TC1 AND 2 OFF
FILE: e103c-91H-523-1p_nrect-2013WP-NS-import-200.out
CHNL# 49: [POWER190472 [BLLDNG2 19.000] [1]]
CHNL# 45: [POWER190456 [LEPRG1 26.000] [1]]
CHNL# 44: [POWER190450 [MACTG1 13.800] [1]]
CHNL# 42: [POWER126652 [RAV 3 22.000] [1]]
CHNL# 41: [POWER101063 [MYST G7 22.000] [1]]
CHNL# 40: [POWER100060 [MIS GT1 18.000] [1]]
TIME (SECONDS)
TUE, JAN 27 2009 15:56
"NE,NY,NB POWER"

2013 WINTER PEAK STORA 167, NS LOAD 2371
NS-NB=-200; NB-NE=300; CBX=543; ONI=773 ONS=863
1 PHASE FAULT ON BREAKER 91H-523 AT TUFT'S COVE 69KV
CLEARS 5041 AND T11 TC1 AND 2 OFF
FILE: e103c-91H-523-1p_nrec-2013WP-NS-import-200.out
CHNL# 119: [VARS IR141-DIGBY]
CHNL# 118: [VARS IR137-STATIA]
CHNL# 117: [VARS IR114-GLENDHU]
CHNL# 116: [VARS IR84-DALHOUSIE]
CHNL# 115: [VARS IR82_NUTTBY]
CHNL# 114: [VARS IR45_AMHERST]
TIME (SECONDS)
TUE, JAN 27 2009 15:57
NS WIND MV

2013 WINTER PEAK STORA 167, NS LOAD 2371
NS-NB=-200; NB-NE=300; CBX=543; ONI=773 ONS=863
1 PHASE FAULT ON BREAKER 91H-523 AT TUFT'S COVE 69KV
CLEARS 5041 AND T11 TC1 AND 2 OFF
FILE: e103c-91H-523-1p_nrec-2013WP-NS-import-200.out
CHNL# 79: [POWER IR141-DIGBY]
CHNL# 78: [POWER IR137-STATIA]
CHNL# 77: [POWER IR114-GLENDHU]
CHNL# 76: [POWER IR84-DALHOUSIE]
CHNL# 75: [POWER IR82_NUTTBY]
CHNL# 74: [POWER IR45_AMHERST]
TIME (SECONDS)
TUE, JAN 27 2009 15:57
NS WIND MW

2013 WINTER PEAK STORA 167, NS LOAD 2371
NS-NB=-200; NB-NE=300; CBX=543; ONI=773 ONS=863
1 PHASE FAULT ON BREAKER 91H-523 AT TUFT'S COVE 69KV
CLEARS 5041 AND T11 TC1 AND 2 OFF
FILE: e103c-91H-523-1p_nrec-2013WP-NS-import-200.out
CHNL# 133: [VOLT199125 [ONSLOW 345.00]]
CHNL# 132: [VOLT199120 [HOPEWELL 345.00]]
CHNL# 131: [VOLT199045 [WOODBINE345.00]]
CHNL# 130: [VOLT190320 [SALBRY 345.00]]
CHNL# 128: [VOLT190004 [KESWICK 345.00]]
CHNL# 127: [VOLT 70002 [ORRINGTN345.00]]
TIME (SECONDS)
TUE, JAN 27 2009 15:57
"345KV VOLTAGE"

2013 WINTER PEAK STORA 167, NS LOAD 2371
NS-NB=-200; NB-NE=300; CBX=543; ONI=773 ONS=863
1 PHASE FAULT ON BREAKER 91H-523 AT TUFT'S COVE 69KV
CLEARS 5041 AND T11 TC1 AND 2 OFF
FILE: e103c-91H-523-1p_nrec-2013WP-NS-import-200.out
CHNL# 125: 60*(1+[FREQ199125 [ONSLOW 345.00]])
CHNL# 124: 60*(1+[FREQ199120 [HOPEWELL 345.00]])
CHNL# 123: 60*(1+[FREQ199045 [WOODBINE345.00]])
CHNL# 122: 60*(1+[FREQ190320 [SALBRY 345.00]])
CHNL# 121: 60*(1+[FREQ190197 [C.COVE 345.00]])
CHNL# 120: 60*(1+[FREQ 70002 [ORRINGTN345.00]])
TIME (SECONDS)
TUE, JAN 27 2009 15:57
FREQUENCY HZ

2013 WINTER PEAK STORA 167, NS LOAD 2371
NS-NB=-200; NB-NE=300; CBX=543; ONI=773 ONS=863
1 PHASE FAULT ON BREAKER 91H-523 AT TUFT'S COVE 69KV
CLEARS 5041 AND T11 TC1 AND 2 OFF
FILE: e103c-91H-523-1p_nrec-2013WP-NS-import-200.out
CHNL# 146: [VOLT199280 TUSKET A138.00]
CHNL# 145: [VOLT199193 [1H-WAS 138.00]
CHNL# 144: [VOLT199165 TUFT COVE138.00]
CHNL# 143: [VOLT199138 SPRNGHILL138.00]
CHNL# 142: [VOLT199090 [50N-TREN138.00]
CHNL# 141: [VOLT199051 [HASTINGS138.00]
TIME (SECONDS)
TUE, JAN 27 2009 15:57
138KV BUS VOLTS

2013 WINTER PEAK STORA 167, NS LOAD 2371
NS-NB=-200; NB-NE=300; CBX=543; ONI=773 ONS=863
1 PHASE FAULT ON BREAKER 91H-523 AT TUFT'S COVE 69KV
CLEARS 5041 AND T11 TC1 AND 2 OFF
FILE: e103c-91H-523-1p_nrec-2013WP-NS-import-200.out
CHNL# 140: [VOLT199240 [BWATER A230.00]
CHNL# 139: [VOLT199200 [BRUSHY 230.00]
CHNL# 138: [VOLT199130 [ONSLOW 230.00]]
CHNL# 137: [VOLT199050 [HASTINGS230.00]]
CHNL# 136: [VOLT199044 [PT.ACONI230.00]]
CHNL# 135: [VOLT199000 [LINGAN 230.00]]
TIME (SECONDS)
TUE, JAN 27 2009 15:57
230KV BUS VOLTS

2013 WINTER PEAK STORA 167, NS LOAD 2371
NS-NB=-200; NB-NE=300; CBX=543; ONI=773 ONS=863
1 PHASE FAULT ON BREAKER 91H-523 AT TUFT'S COVE 69KV
CLEARS 5041 AND T11 TC1 AND 2 OFF
FILE: e103c-91H-523-1p_nrec-2013WP-NS-import-200.out
CHNL# 217: [L6513NMW]
CHNL# 215: [L6503MW]
CHNL# 197: [L8003MW]
CHNL# 195: [L8004MW]
CHNL# 193: [L8001MW]
CHNL# 221: [L3001MW]
TIME (SECONDS)
TUE, JAN 27 2009 15:57
LINE FLOW MW

2013 WINTER PEAK STORA 167, NS LOAD 2371
NS-NB=-200; NB-NE=300; CBX=543; ONI=773 ONS=863
1 PHASE FAULT ON BREAKER 91H-523 AT TUFT'S COVE 69KV
CLEARS 5041 AND T11 TC1 AND 2 OFF
FILE: e103c-91H-523-1p_nrec-2013WP-NS-import-200.out
CHNL# 154: [IR141-DIGBYH69.0 VOLTS]
CHNL# 153: [IR137-STATIG25.0 VOLTS]
CHNL# 152: [IR114-GLENDH138.0 VOLTS]
CHNL# 151: [IR84-DALHOHV230.0 VOLTS]
CHNL# 150: [IR82 NUTBHV69.0 VOLTS]
CHNL# 149: [IR45 AMHERTP138.0 VOLTS]
TIME (SECONDS)
TUE, JAN 27 2009 15:57
WIND BUS VOLTS

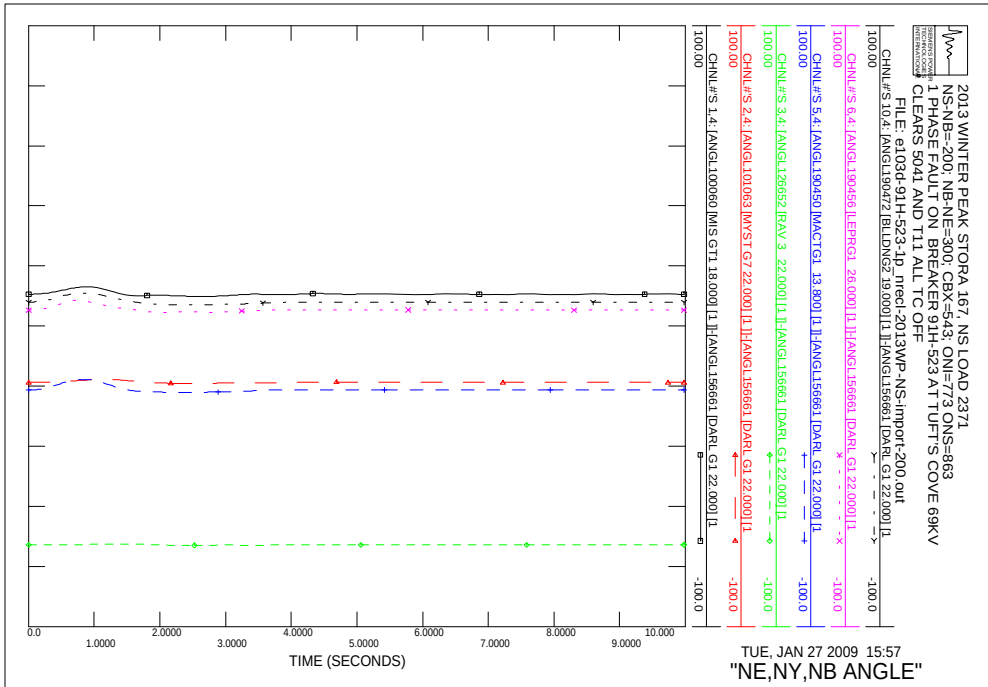
2013 WINTER PEAK STORA 167, NS LOAD 2371
NS-NB=-200; NB-NE=300; CBX=543; ONI=773 ONS=863
1 PHASE FAULT ON BREAKER 91H-523 AT TUFT'S COVE 69KV
CLEARS 5041 AND T11 ALL TC OFF
FILE: e103d-91H-523-1p_nrecl-2013WP-NS-import-200.out
CHNL#'S 10,4: [ANGL190472 [BLLDNG2 19.000] [1]]-[ANGL156661 [DARL G1 22.000] [1
CHNL#'S 6,4: [ANGL190456 [LEPRG1 26.000] [1]]-[ANGL156661 [DARL G1 22.000] [1
CHNL#'S 5,4: [ANGL190450 [MACTG1 13.800] [1]]-[ANGL156661 [DARL G1 22.000] [1
CHNL#'S 3,4: [ANGL126652 [RAV 3 22.000] [1]]-[ANGL156661 [DARL G1 22.000] [1
CHNL#'S 2,4: [ANGL101063 [MYST G7 22.000] [1]]-[ANGL156661 [DARL G1 22.000] [1
CHNL#'S 1,4: [ANGL100060 [MIS GT1 18.000] [1]]-[ANGL156661 [DARL G1 22.000] [1
100.00
-100.0
0.0
1.0000
2.0000
3.0000
4.0000
5.0000
6.0000
7.0000
8.0000
9.0000
10.000
TIME (SECONDS)
TUE, JAN 27 2009 15:57
"NE,NY,NB ANGLE"

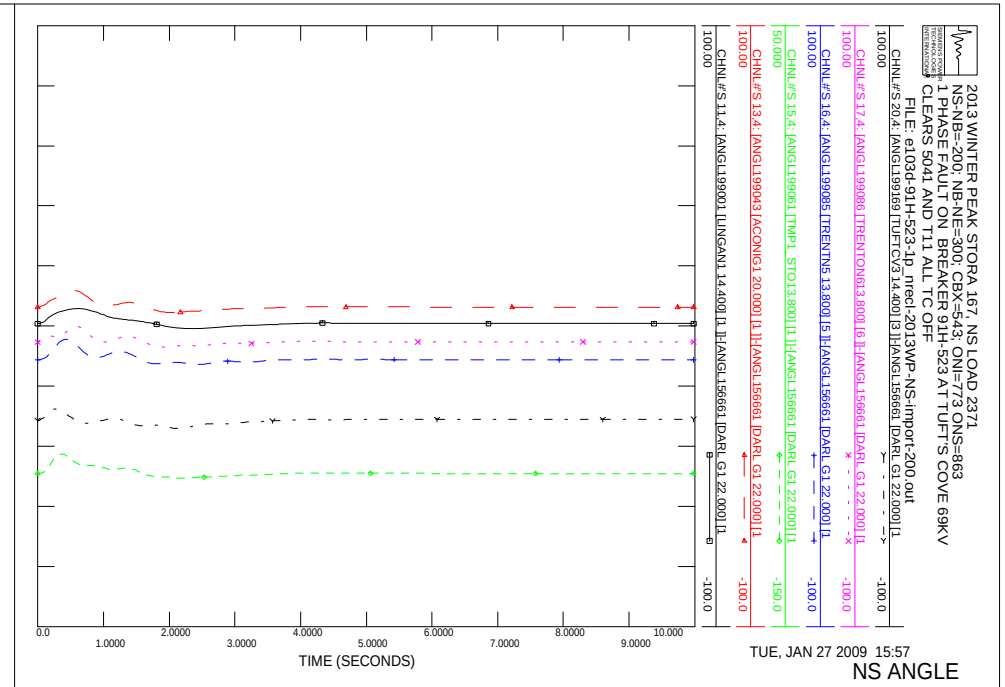
2013 WINTER PEAK STORA 167, NS LOAD 2371
NS-NB=-200; NB-NE=300; CBX=543; ONI=773 ONS=863
1 PHASE FAULT ON BREAKER 91H-523 AT TUFT'S COVE 69KV
CLEARS 5041 AND T11 ALL TC OFF
FILE: e103d-91H-523-1p_nrecl-2013WP-NS-import-200.out
CHNL#'S 20,4: [ANGL199169 [TUFTCV3 14.400] [3]]-[ANGL156661 [DARL G1 22.000] [1
CHNL#'S 17,4: [ANGL199086 [TRENTON613.800] [6]]-[ANGL156661 [DARL G1 22.000] [1
CHNL#'S 16,4: [ANGL199085 [TRENTN5 13.800] [5]]-[ANGL156661 [DARL G1 22.000] [1
CHNL#'S 15,4: [ANGL199061 [TMP1 STO13.800] [1]]-[ANGL156661 [DARL G1 22.000] [1
CHNL#'S 13,4: [ANGL199043 [ACONIG1 20.000] [1]]-[ANGL156661 [DARL G1 22.000] [1
CHNL#'S 11,4: [ANGL199001 [LINGAN1 14.400] [1]]-[ANGL156661 [DARL G1 22.000] [1
100.00
-100.0
50.000
-150.0
0.0
1.0000
2.0000
3.0000
4.0000
5.0000
6.0000
7.0000
8.0000
9.0000
10.000
TIME (SECONDS)
TUE, JAN 27 2009 15:57
NS ANGLE

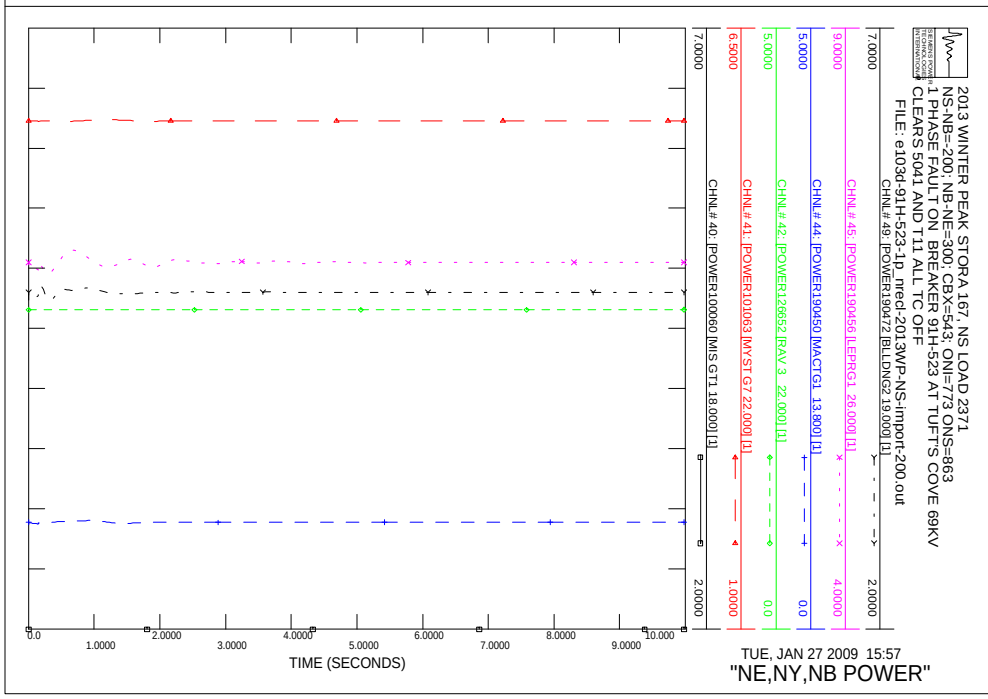
2013 WINTER PEAK STORA 167, NS LOAD 2371
NS-NB=-200; NB-NE=300; CBX=543; ONI=773 ONS=863
1 PHASE FAULT ON BREAKER 91H-523 AT TUFT'S COVE 69KV
CLEARS 5041 AND T11 ALL TC OFF
FILE: e103d-91H-523-1p_nrecl-2013WP-NS-import-200.out
CHNL# 49: [POWER190472 [BLLDNG2 19.000] [1]]
CHNL# 45: [POWER190456 [LEPRG1 26.000] [1]]
CHNL# 44: [POWER190450 [MACTG1 13.800] [1]]
CHNL# 42: [POWER126652 [RAV 3 22.000] [1]]
CHNL# 41: [POWER101063 [MYST G7 22.000] [1]]
CHNL# 40: [POWER100060 [MIS GT1 18.000] [1]]
7.0000
2.0000
9.0000
4.0000
5.0000
0.0
6.5000
1.0000
0.0
1.0000
2.0000
3.0000
4.0000
5.0000
6.0000
7.0000
8.0000
9.0000
10.000
TIME (SECONDS)
TUE, JAN 27 2009 15:57
"NE,NY,NB POWER"

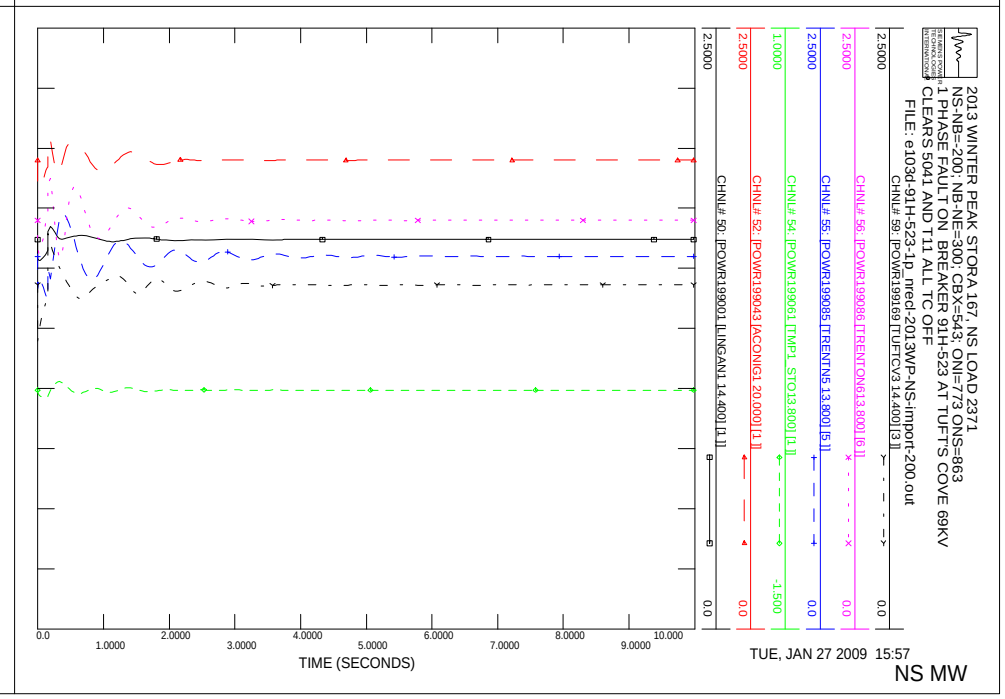
2013 WINTER PEAK STORA 167, NS LOAD 2371
NS-NB=-200; NB-NE=300; CBX=543; ONI=773 ONS=863
1 PHASE FAULT ON BREAKER 91H-523 AT TUFT'S COVE 69KV
CLEARS 5041 AND T11 ALL TC OFF
FILE: e103d-91H-523-1p_nrecl-2013WP-NS-import-200.out
CHNL# 59: [POWR199169 [TUFTCV3 14.400] [3]]
CHNL# 56: [POWR199086 [TRENTON613.800] [6]]
CHNL# 55: [POWR199085 [TRENTN5 13.800] [5]]
CHNL# 54: [POWR199061 [TMP1 STO13.800] [1]]
CHNL# 52: [POWR199043 [ACONIG1 20.000] [1]]
CHNL# 50: [POWR199001 [LINGAN1 14.400] [1]]
2.5000
0.0
1.0000
-1.500
0.0
1.0000
2.0000
3.0000
4.0000
5.0000
6.0000
7.0000
8.0000
9.0000
10.000
TIME (SECONDS)
TUE, JAN 27 2009 15:57
NS MW

NS WIND MV

NS WIND MW

"345KV VOLTAGE"

FREQUENCY HZ

2013 WINTER PEAK STORA 167, NS LOAD 2371
NS-NB=-200; NB-NE=300; CBX=543; ONI=773 ONS=863
1 PHASE FAULT ON BREAKER 91H-523 AT TUFT'S COVE 69KV
CLEARS 5041 AND T11 ALL TC OFF
FILE: e103d-91H-523-1p_nrecl-2013WP-NS-import-200.out
CHNL# 146: [VOLT199280 [TUSKET A138.00]]
CHNL# 145: [VOLT199193 [1H-WAS 138.00]]
CHNL# 144: [VOLT199165 [TUFT COVE138.00]]
CHNL# 143: [VOLT199138: [SPRNGHILL138.00]]
CHNL# 142: [VOLT199090 [50N-TREN138.00]]
CHNL# 141: [VOLT199051 [HASTINGS138.00]]
1.2000
0.70000
0.0
1.0000
2.0000
3.0000
4.0000
5.0000
6.0000
7.0000
8.0000
9.0000
10.000
TIME (SECONDS)
TUE, JAN 27 2009 15:57
138KV BUS VOLTS

2013 WINTER PEAK STORA 167, NS LOAD 2371
NS-NB=-200; NB-NE=300; CBX=543; ONI=773 ONS=863
1 PHASE FAULT ON BREAKER 91H-523 AT TUFT'S COVE 69KV
CLEARS 5041 AND T11 ALL TC OFF
FILE: e103d-91H-523-1p_nrecl-2013WP-NS-import-200.out
CHNL# 140: [VOLT199240 [BWATER A230.00]]
CHNL# 139: [VOLT199200 [BRUSHY 230.00]]
CHNL# 138: [VOLT199130 [ONSLOW 230.00]]
CHNL# 137: [VOLT199050 [HASTINGS230.00]]
CHNL# 136: [VOLT199044 [PT.ACONI230.00]]
CHNL# 135: [VOLT199000 [LINGAN 230.00]]
1.2000
0.70000
0.0
1.0000
2.0000
3.0000
4.0000
5.0000
6.0000
7.0000
8.0000
9.0000
10.000
TIME (SECONDS)
TUE, JAN 27 2009 15:57
230KV BUS VOLTS

2013 WINTER PEAK STORA 167, NS LOAD 2371
NS-NB=-200; NB-NE=300; CBX=543; ONI=773 ONS=863
1 PHASE FAULT ON BREAKER 91H-523 AT TUFT'S COVE 69KV
CLEARS 5041 AND T11 ALL TC OFF
FILE: e103d-91H-523-1p_nrecl-2013WP-NS-import-200.out
CHNL# 217: [L6533NWV]
CHNL# 215: [L6503MWV]
CHNL# 197: [L8003MWV]
CHNL# 195: [L8004MWV]
CHNL# 193: [L8001MWV]
CHNL# 221: [L3001MWV]
250.00
500.00
1000.0
0.0
-250.0
-1000.
TIME (SECONDS)
TUE, JAN 27 2009 15:57
LINE FLOW MW

2013 WINTER PEAK STORA 167, NS LOAD 2371
NS-NB=-200; NB-NE=300; CBX=543; ONI=773 ONS=863
1 PHASE FAULT ON BREAKER 91H-523 AT TUFT'S COVE 69KV
CLEARS 5041 AND T11 ALL TC OFF
FILE: e103d-91H-523-1p_nrecl-2013WP-NS-import-200.out
CHNL# 154: [IR141-DIGBYH69.0 VOLTS]
CHNL# 153: [IR137-STATIG25.0 VOLTS]
CHNL# 152: [IR114-GLENDH138.0 VOLTS]
CHNL# 151: [IR84-DALHOHV230.0 VOLTS]
CHNL# 150: [IR82 NUTBHV69.0 VOLTS]
CHNL# 149: [IR45 AMHERTP138.0 VOLTS]
1.2000
0.70000
0.0
1.0000
2.0000
3.0000
4.0000
5.0000
6.0000
7.0000
8.0000
9.0000
10.000
TIME (SECONDS)
TUE, JAN 27 2009 15:57
WIND BUS VOLTS

2013 WINTER PEAK STORA 167, NS LOAD 2371
NS-NB=-200; NB-NE=300; CBX=543; ONI=773 ONS=863
1 PHASE FAULT ON BREAKER 104H-600 AT BURNSIDE 138KV
CLEARS BUS; ALL BURNSIDE ON
FILE: e104a-104H-600-1p_mrecl-2013WP-NS-import-200.out
CHNL# 20: [ANGL199169 [TUFTCV3 14.400] [3]] [ANGL156661 [DARL G1 22.000] [1]
CHNL# 17: [ANGL199086 [TRENTON6 13.800] [6]] [ANGL156661 [DARL G1 22.000] [1]
CHNL# 16: [ANGL199085 [TRENTN5 13.800] [5]] [ANGL156661 [DARL G1 22.000] [1]
CHNL# 15: [ANGL199061 [TMP1 STO 13.800] [1]] [ANGL156661 [DARL G1 22.000] [1]
CHNL# 13: [ANGL199043 [ACONIG1 20.000] [1]] [ANGL156661 [DARL G1 22.000] [1]
CHNL# 11: [ANGL199001 [LINGAN1 14.400] [1]] [ANGL156661 [DARL G1 22.000] [1]
TIME (SECONDS)
TUE, JAN 27 2009 15:57
NS ANGLE

2013 WINTER PEAK STORA 167, NS LOAD 2371
NS-NB=-200; NB-NE=300; CBX=543; ONI=773 ONS=863
1 PHASE FAULT ON BREAKER 104H-600 AT BURNSIDE 138KV
CLEARS BUS; ALL BURNSIDE ON
FILE: e104a-104H-600-1p_mrecl-2013WP-NS-import-200.out
CHNL# 10: [ANGL190472 [BLLDNG2 19.000] [1]] [ANGL156661 [DARL G1 22.000] [1]
CHNL# 6: [ANGL190456 [LEPRG1 26.000] [1]] [ANGL156661 [DARL G1 22.000] [1]
CHNL# 5: [ANGL190450 [MACTG1 13.800] [1]] [ANGL156661 [DARL G1 22.000] [1]
CHNL# 3: [ANGL126652 [RAV 3 22.000] [1]] [ANGL156661 [DARL G1 22.000] [1]
CHNL# 2: [ANGL101063 [MYST G7 22.000] [1]] [ANGL156661 [DARL G1 22.000] [1]
CHNL# 1: [ANGL100060 [MIS GT1 18.000] [1]] [ANGL156661 [DARL G1 22.000] [1]
TIME (SECONDS)
TUE, JAN 27 2009 15:57
"NE,NY,NB ANGLE"

2013 WINTER PEAK STORA 167, NS LOAD 2371
NS-NB=-200; NB-NE=300; CBX=543; ONI=773 ONS=863
1 PHASE FAULT ON BREAKER 104H-600 AT BURNSIDE 138KV
CLEARS BUS; ALL BURNSIDE ON
FILE: e104a-104H-600-1p_mrecl-2013WP-NS-import-200.out
CHNL# 59: [POWR199169 [TUFTCV3 14.400] [3]]
CHNL# 56: [POWR199086 [TRENTON6 13.800] [6]]
CHNL# 55: [POWR199085 [TRENTN5 13.800] [5]]
CHNL# 54: [POWR199061 [TMP1 STO 13.800] [1]]
CHNL# 52: [POWR199043 [ACONIG1 20.000] [1]]
CHNL# 50: [POWR199001 [LINGAN1 14.400] [1]]
TIME (SECONDS)
TUE, JAN 27 2009 15:57
NS MW

2013 WINTER PEAK STORA 167, NS LOAD 2371
NS-NB=-200; NB-NE=300; CBX=543; ONI=773 ONS=863
1 PHASE FAULT ON BREAKER 104H-600 AT BURNSIDE 138KV
CLEARS BUS; ALL BURNSIDE ON
FILE: e104a-104H-600-1p_mrecl-2013WP-NS-import-200.out
CHNL# 49: [POWER190472 [BLLDNG2 19.000] [1]]
CHNL# 45: [POWER190456 [LEPRG1 26.000] [1]]
CHNL# 44: [POWER190450 [MACTG1 13.800] [1]]
CHNL# 42: [POWER126652 [RAV 3 22.000] [1]]
CHNL# 41: [POWER101063 [MYST G7 22.000] [1]]
CHNL# 40: [POWER100060 [MIS GT1 18.000] [1]]
TIME (SECONDS)
TUE, JAN 27 2009 15:57
"NE,NY,NB POWER"

2013 WINTER PEAK STORA 167, NS LOAD 2371
NS-NB=-200; NB-NE=300; CBX=543; ONI=773 ONS=863
1 PHASE FAULT ON BREAKER 104H-600 AT BURNSIDE 138KV
CLEARS BUS; ALL BURNSIDE ON
FILE: e104a-104H-600-1p_mecl-2013WP-NS-import-200.out
CHNL# 119: [VARS IR141-DIGBY]
CHNL# 118: [VARS IR137-STATIA]
CHNL# 117: [VARS IR114-GLENDHU]
CHNL# 116: [VARS IR84-DALHOUSIE]
CHNL# 115: [VARS IR82_NUTTBY]
CHNL# 114: [VARS IR45_AMHERST]
TIME (SECONDS)
TUE, JAN 27 2009 15:57
NS WIND MV

2013 WINTER PEAK STORA 167, NS LOAD 2371
NS-NB=-200; NB-NE=300; CBX=543; ONI=773 ONS=863
1 PHASE FAULT ON BREAKER 104H-600 AT BURNSIDE 138KV
CLEARS BUS; ALL BURNSIDE ON
FILE: e104a-104H-600-1p_mecl-2013WP-NS-import-200.out
CHNL# 79: [POWER IR141-DIGBY]
CHNL# 78: [POWER IR137-STATIA]
CHNL# 77: [POWER IR114-GLENDHU]
CHNL# 76: [POWER IR84-DALHOUSIE]
CHNL# 75: [POWER IR82_NUTTBY]
CHNL# 74: [POWER IR45_AMHERST]
TIME (SECONDS)
TUE, JAN 27 2009 15:57
NS WIND MW

2013 WINTER PEAK STORA 167, NS LOAD 2371
NS-NB=-200; NB-NE=300; CBX=543; ONI=773 ONS=863
1 PHASE FAULT ON BREAKER 104H-600 AT BURNSIDE 138KV
CLEARS BUS; ALL BURNSIDE ON
FILE: e104a-104H-600-1p_mecl-2013WP-NS-import-200.out
CHNL# 133: [VOLT199125 [ONSLOW 345.00]]
CHNL# 132: [VOLT199120 [HOPEWELL 345.00]]
CHNL# 131: [VOLT199045 [WOODBINE345.00]]
CHNL# 130: [VOLT190320 [SALBRY 345.00]]
CHNL# 128: [VOLT190004 [KESWICK 345.00]]
CHNL# 127: [VOLT 70002 [ORRINGTN345.00]]
TIME (SECONDS)
TUE, JAN 27 2009 15:57
"345KV VOLTAGE"

2013 WINTER PEAK STORA 167, NS LOAD 2371
NS-NB=-200; NB-NE=300; CBX=543; ONI=773 ONS=863
1 PHASE FAULT ON BREAKER 104H-600 AT BURNSIDE 138KV
CLEARS BUS; ALL BURNSIDE ON
FILE: e104a-104H-600-1p_mecl-2013WP-NS-import-200.out
CHNL# 125: 60*(1+[FREQ199125 [ONSLOW 345.00]])
CHNL# 124: 60*(1+[FREQ199120 [HOPEWELL 345.00]])
CHNL# 123: 60*(1+[FREQ199045 [WOODBINE345.00]])
CHNL# 122: 60*(1+[FREQ190320 [SALBRY 345.00]])
CHNL# 121: 60*(1+[FREQ190197 [C.COVE 345.00]])
CHNL# 120: 60*(1+[FREQ 70002 [ORRINGTN345.00]])
TIME (SECONDS)
TUE, JAN 27 2009 15:57
FREQUENCY HZ

2013 WINTER PEAK STORA 167, NS LOAD 2371
NS-NB=-200; NB-NE=300; CBX=543; ONI=773 ONS=863
1 PHASE FAULT ON BREAKER 104H-600 AT BURNSIDE 138KV
CLEARS BUS; ALL BURNSIDE ON
FILE: e104a-104H-600-1p_mrecl-2013WP-NS-import-200.out
CHNL# 146: [VOLT199280 [TUSKET A138.00]]
CHNL# 145: [VOLT199193 [HHWAS 138.00]]
CHNL# 144: [VOLT199165 [TUFTCOVE138.00]]
CHNL# 143: [VOLT199138 [SPRNGHILL138.00]]
CHNL# 142: [VOLT199090 [SON-TREN138.00]]
CHNL# 141: [VOLT199051 [HASTINGS138.00]]
TIME (SECONDS)
TUE, JAN 27 2009 15:57
138KV BUS VOLTS

2013 WINTER PEAK STORA 167, NS LOAD 2371
NS-NB=-200; NB-NE=300; CBX=543; ONI=773 ONS=863
1 PHASE FAULT ON BREAKER 104H-600 AT BURNSIDE 138KV
CLEARS BUS; ALL BURNSIDE ON
FILE: e104a-104H-600-1p_mrecl-2013WP-NS-import-200.out
CHNL# 140: [VOLT199240 [BWATER A230.00]]
CHNL# 139: [VOLT199200 [BRUSHY 230.00]]
CHNL# 138: [VOLT199130 [ONSLOW 230.00]]
CHNL# 137: [VOLT199050 [HASTINGS230.00]]
CHNL# 136: [VOLT199044 [PT.ACONI230.00]]
CHNL# 135: [VOLT199000 [LINGAN 230.00]]
TIME (SECONDS)
TUE, JAN 27 2009 15:57
230KV BUS VOLTS

2013 WINTER PEAK STORA 167, NS LOAD 2371
NS-NB=-200; NB-NE=300; CBX=543; ONI=773 ONS=863
1 PHASE FAULT ON BREAKER 104H-600 AT BURNSIDE 138KV
CLEARS BUS; ALL BURNSIDE ON
FILE: e104a-104H-600-1p_mrecl-2013WP-NS-import-200.out
CHNL# 217: [L6533MW]
CHNL# 215: [L6503MW]
CHNL# 197: [L8003MW]
CHNL# 195: [L8004MW]
CHNL# 193: [L8001MW]
CHNL# 221: [L3001MW]
TIME (SECONDS)
TUE, JAN 27 2009 15:57
LINE FLOW MW

2013 WINTER PEAK STORA 167, NS LOAD 2371
NS-NB=-200; NB-NE=300; CBX=543; ONI=773 ONS=863
1 PHASE FAULT ON BREAKER 104H-600 AT BURNSIDE 138KV
CLEARS BUS; ALL BURNSIDE ON
FILE: e104a-104H-600-1p_mrecl-2013WP-NS-import-200.out
CHNL# 154: [IR141-DIGBYH69.0 VOLTS]
CHNL# 153: [IR137-STATIG25.0 VOLTS]
CHNL# 152: [IR114-GLENDH138.0 VOLTS]
CHNL# 151: [IR84-DALHOHV230.0 VOLTS]
CHNL# 150: [IR82 NUTBHV69.0 VOLTS]
CHNL# 149: [IR45 AMHERTP138.0 VOLTS]
TIME (SECONDS)
TUE, JAN 27 2009 15:57
WIND BUS VOLTS

2013 WINTER PEAK STORA 167, NS LOAD 2371
NS-NB=-200; NB-NE=300; CBX=543; ONI=773 ONS=863
1 PHASE FAULT ON BREAKER 104H-600 AT BURNSIDE 138KV
CLEARS BUS; ALL BURNSIDE OFF
FILE: e104b-104H-600-1p_mrecl-2013WP-NS-import-200.out
CHNL# 20: [ANGL199169 [TUFTCV3 14.400] [3]] [ANGL156661 [DARL G1 22.000] [1]
CHNL# 17: [ANGL199086 [TRENTON613.800] [6]] [ANGL156661 [DARL G1 22.000] [1]
CHNL# 16: [ANGL199085 [TRENTN5 13.800] [5]] [ANGL156661 [DARL G1 22.000] [1]
CHNL# 15: [ANGL199061 [TMP1 STO13.800] [1]] [ANGL156661 [DARL G1 22.000] [1]
CHNL# 13: [ANGL199043 [ACONIG1 20.000] [1]] [ANGL156661 [DARL G1 22.000] [1]
CHNL# 11: [ANGL199001 [LINGAN1 14.400] [1]] [ANGL156661 [DARL G1 22.000] [1]
TIME (SECONDS)
TUE, JAN 27 2009 15:57
NS ANGLE

2013 WINTER PEAK STORA 167, NS LOAD 2371
NS-NB=-200; NB-NE=300; CBX=543; ONI=773 ONS=863
1 PHASE FAULT ON BREAKER 104H-600 AT BURNSIDE 138KV
CLEARS BUS; ALL BURNSIDE OFF
FILE: e104b-104H-600-1p_mrecl-2013WP-NS-import-200.out
CHNL# 10: [ANGL190472 [BLLDNG2 19.000] [1]] [ANGL156661 [DARL G1 22.000] [1]
CHNL# 6: [ANGL190456 [LEPRG1 26.000] [1]] [ANGL156661 [DARL G1 22.000] [1]
CHNL# 5: [ANGL190450 [MACTG1 13.800] [1]] [ANGL156661 [DARL G1 22.000] [1]
CHNL# 3: [ANGL126652 [RAV 3 22.000] [1]] [ANGL156661 [DARL G1 22.000] [1]
CHNL# 2: [ANGL101063 [MYST G7 22.000] [1]] [ANGL156661 [DARL G1 22.000] [1]
CHNL# 1: [ANGL100060 [MIS GT1 18.000] [1]] [ANGL156661 [DARL G1 22.000] [1]
TIME (SECONDS)
TUE, JAN 27 2009 15:57
"NE,NY,NB ANGLE"

2013 WINTER PEAK STORA 167, NS LOAD 2371
NS-NB=-200; NB-NE=300; CBX=543; ONI=773 ONS=863
1 PHASE FAULT ON BREAKER 104H-600 AT BURNSIDE 138KV
CLEARS BUS; ALL BURNSIDE OFF
FILE: e104b-104H-600-1p_mrecl-2013WP-NS-import-200.out
CHNL# 59: [POWR199169 [TUFTCV3 14.400] [3]]
CHNL# 56: [POWR199086 [TRENTON613.800] [6]]
CHNL# 55: [POWR199085 [TRENTN5 13.800] [5]]
CHNL# 54: [POWR199061 [TMP1 STO13.800] [1]]
CHNL# 52: [POWR199043 [ACONIG1 20.000] [1]]
CHNL# 50: [POWR199001 [LINGAN1 14.400] [1]]
TIME (SECONDS)
TUE, JAN 27 2009 15:57
NS MW

2013 WINTER PEAK STORA 167, NS LOAD 2371
NS-NB=-200; NB-NE=300; CBX=543; ONI=773 ONS=863
1 PHASE FAULT ON BREAKER 104H-600 AT BURNSIDE 138KV
CLEARS BUS; ALL BURNSIDE OFF
FILE: e104b-104H-600-1p_mrecl-2013WP-NS-import-200.out
CHNL# 49: [POWER190472 [BLLDNG2 19.000] [1]]
CHNL# 45: [POWER190456 [LEPRG1 26.000] [1]]
CHNL# 44: [POWER190450 [MACTG1 13.800] [1]]
CHNL# 42: [POWER126652 [RAV 3 22.000] [1]]
CHNL# 41: [POWER101063 [MYST G7 22.000] [1]]
CHNL# 40: [POWER100060 [MIS GT1 18.000] [1]]
TIME (SECONDS)
TUE, JAN 27 2009 15:57
"NE,NY,NB POWER"

2013 WINTER PEAK STORA 167, NS LOAD 2371
NS-NB=-200; NB-NE=300; CBX=543; ONI=773 ONS=863
1 PHASE FAULT ON BREAKER 104H-600 AT BURNSIDE 138KV
CLEARS BUS; ALL BURNSIDE OFF
FILE: e104b-104H-600-1p_mecl-2013WP-NS-import-200.out
CHNL# 119: [VARS IR141-DIGBY]
CHNL# 118: [VARS IR137-STATIA]
CHNL# 117: [VARS IR114-GLENDHU]
CHNL# 116: [VARS IR84-DALHOUSIE]
CHNL# 115: [VARS IR82_NUTTBY]
CHNL# 114: [VARS IR45_AMHERST]
TIME (SECONDS)
TUE, JAN 27 2009 15:57
NS WIND MV

2013 WINTER PEAK STORA 167, NS LOAD 2371
NS-NB=-200; NB-NE=300; CBX=543; ONI=773 ONS=863
1 PHASE FAULT ON BREAKER 104H-600 AT BURNSIDE 138KV
CLEARS BUS; ALL BURNSIDE OFF
FILE: e104b-104H-600-1p_mecl-2013WP-NS-import-200.out
CHNL# 79: [POWER IR141-DIGBY]
CHNL# 78: [POWER IR137-STATIA]
CHNL# 77: [POWER IR114-GLENDHU]
CHNL# 76: [POWER IR84-DALHOUSIE]
CHNL# 75: [POWER IR82_NUTTBY]
CHNL# 74: [POWER IR45_AMHERST]
TIME (SECONDS)
TUE, JAN 27 2009 15:57
NS WIND MW

2013 WINTER PEAK STORA 167, NS LOAD 2371
NS-NB=-200; NB-NE=300; CBX=543; ONI=773 ONS=863
1 PHASE FAULT ON BREAKER 104H-600 AT BURNSIDE 138KV
CLEARS BUS; ALL BURNSIDE OFF
FILE: e104b-104H-600-1p_mecl-2013WP-NS-import-200.out
CHNL# 133: [VOLT199125 [ONSLOW 345.00]]
CHNL# 132: [VOLT199120 [HOPEWELL 345.00]]
CHNL# 131: [VOLT199045 [WOODBINE345.00]]
CHNL# 130: [VOLT190320 [SALBRY 345.00]]
CHNL# 128: [VOLT190004 [KESWICK 345.00]]
CHNL# 127: [VOLT 70002 [ORRINGTN345.00]]
TIME (SECONDS)
TUE, JAN 27 2009 15:57
"345KV VOLTAGE"

2013 WINTER PEAK STORA 167, NS LOAD 2371
NS-NB=-200; NB-NE=300; CBX=543; ONI=773 ONS=863
1 PHASE FAULT ON BREAKER 104H-600 AT BURNSIDE 138KV
CLEARS BUS; ALL BURNSIDE OFF
FILE: e104b-104H-600-1p_mecl-2013WP-NS-import-200.out
CHNL# 125: 60*(1+[FREQ199125 [ONSLOW 345.00]])
CHNL# 124: 60*(1+[FREQ199120 [HOPEWELL 345.00]])
CHNL# 123: 60*(1+[FREQ199045 [WOODBINE345.00]])
CHNL# 122: 60*(1+[FREQ190320 [SALBRY 345.00]])
CHNL# 121: 60*(1+[FREQ190197 [C.COVE 345.00]])
CHNL# 120: 60*(1+[FREQ 70002 [ORRINGTN345.00]])
TIME (SECONDS)
TUE, JAN 27 2009 15:57
FREQUENCY HZ

2013 WINTER PEAK STORA 167, NS LOAD 2371
NS-NB=-200; NB-NE=300; CBX=543; ONI=773 ONS=863
1 PHASE FAULT ON BREAKER 104H-600 AT BURNSIDE 138KV
CLEARS BUS; ALL BURNSIDE OFF
FILE: e104b-104H-600-1p_mrecl-2013WP-NS-import-200.out
CHNL# 146: [VOLT199280 [TUSKET A138.00]]
CHNL# 145: [VOLT199193 [HHWAS 138.00]]
CHNL# 144: [VOLT199165 [TUFTCOVE138.00]]
CHNL# 143: [VOLT199138 [SPRNGHILL138.00]]
CHNL# 142: [VOLT199090 [SON-TREN138.00]]
CHNL# 141: [VOLT199051 [HASTINGS138.00]]
1.2000
0.70000
0.0
1.0000
2.0000
3.0000
4.0000
5.0000
6.0000
7.0000
8.0000
9.0000
10.000
TIME (SECONDS)
TUE, JAN 27 2009 15:57
138KV BUS VOLTS

2013 WINTER PEAK STORA 167, NS LOAD 2371
NS-NB=-200; NB-NE=300; CBX=543; ONI=773 ONS=863
1 PHASE FAULT ON BREAKER 104H-600 AT BURNSIDE 138KV
CLEARS BUS; ALL BURNSIDE OFF
FILE: e104b-104H-600-1p_mrecl-2013WP-NS-import-200.out
CHNL# 140: [VOLT199240 [BWATER A230.00]]
CHNL# 139: [VOLT199200 [BRUSHY 230.00]]
CHNL# 138: [VOLT199130 [ONSLOW 230.00]]
CHNL# 137: [VOLT199050 [HASTINGS230.00]]
CHNL# 136: [VOLT199044 [PT.ACONI230.00]]
CHNL# 135: [VOLT199000 [LINGAN 230.00]]
1.2000
0.70000
0.0
1.0000
2.0000
3.0000
4.0000
5.0000
6.0000
7.0000
8.0000
9.0000
10.000
TIME (SECONDS)
TUE, JAN 27 2009 15:57
230KV BUS VOLTS

2013 WINTER PEAK STORA 167, NS LOAD 2371
NS-NB=-200; NB-NE=300; CBX=543; ONI=773 ONS=863
1 PHASE FAULT ON BREAKER 104H-600 AT BURNSIDE 138KV
CLEARS BUS; ALL BURNSIDE OFF
FILE: e104b-104H-600-1p_mrecl-2013WP-NS-import-200.out
CHNL# 217: [L6533NMW]
CHNL# 215: [L6503MW]
CHNL# 197: [L8003MW]
CHNL# 195: [L8004MW]
CHNL# 193: [L8001MW]
CHNL# 221: [L3001MW]
250.00
-250.0
500.00
0.0
1000.0
-1000.
TIME (SECONDS)
TUE, JAN 27 2009 15:57
LINE FLOW MW

2013 WINTER PEAK STORA 167, NS LOAD 2371
NS-NB=-200; NB-NE=300; CBX=543; ONI=773 ONS=863
1 PHASE FAULT ON BREAKER 104H-600 AT BURNSIDE 138KV
CLEARS BUS; ALL BURNSIDE OFF
FILE: e104b-104H-600-1p_mrecl-2013WP-NS-import-200.out
CHNL# 154: [IR141-DIGBYH69.0 VOLTS]
CHNL# 153: [IR137-STATIG25.0 VOLTS]
CHNL# 152: [IR114-GLENDH138.0 VOLTS]
CHNL# 151: [IR84-DALHOHV230.0 VOLTS]
CHNL# 150: [IR82_NUTBHV69.0 VOLTS]
CHNL# 149: [IR45_AMHERTP138.0 VOLTS]
1.2000
0.70000
0.0
1.0000
2.0000
3.0000
4.0000
5.0000
6.0000
7.0000
8.0000
9.0000
10.000
TIME (SECONDS)
TUE, JAN 27 2009 15:57
WIND BUS VOLTS

2013 WINTER PEAK STORA 167, NS LOAD 2371
NS-NB=-200; NB-NE=300; CBX=543; ONI=773 ONS=863
1 PHASE FAULT ON BUS B61 AT HOPEWELL
CLEARS BUS AND TRANSFORMER, OPEN ENDS L8003 TRIP L8004
FILE: g101-79N-B61-SPS_delay_nrecl-2013WP-NS-import-200.out
CHNL#S 20:4: [ANGL199169 [TUFTCV3 14.400] [3]] [ANGL156661 [DARL G1 22.000] [1]]
CHNL#S 17:4: [ANGL199086 [TRENTON613.800] [6]] [ANGL156661 [DARL G1 22.000] [1]]
CHNL#S 16:4: [ANGL199085 [TRENTN5 13.800] [5]] [ANGL156661 [DARL G1 22.000] [1]]
CHNL#S 15:4: [ANGL199061 [TMP1 STO13.800] [1]] [ANGL156661 [DARL G1 22.000] [1]]
CHNL#S 13:4: [ANGL199043 [ACONIG1 20.000] [1]] [ANGL156661 [DARL G1 22.000] [1]]
CHNL#S 11:4: [ANGL199001 [LINGAN1 14.400] [1]] [ANGL156661 [DARL G1 22.000] [1]]
100.00
-100.0
0.0
1.0000
2.0000
3.0000
4.0000
5.0000
6.0000
7.0000
8.0000
9.0000
10.000
TIME (SECONDS)
TUE, JAN 27 2009 15:57
NS ANGLE

2013 WINTER PEAK STORA 167, NS LOAD 2371
NS-NB=-200; NB-NE=300; CBX=543; ONI=773 ONS=863
1 PHASE FAULT ON BUS B61 AT HOPEWELL
CLEARS BUS AND TRANSFORMER, OPEN ENDS L8003 TRIP L8004
FILE: g101-79N-B61-SPS_delay_nrecl-2013WP-NS-import-200.out
CHNL#S 10:4: [ANGL190472 [BLLDNG2 19.000] [1]] [ANGL156661 [DARL G1 22.000] [1]]
CHNL#S 6:4: [ANGL190456 [LEPRG1 26.000] [1]] [ANGL156661 [DARL G1 22.000] [1]]
CHNL#S 5:4: [ANGL190450 [MACTG1 13.800] [1]] [ANGL156661 [DARL G1 22.000] [1]]
CHNL#S 3:4: [ANGL126652 [RAV 3 22.000] [1]] [ANGL156661 [DARL G1 22.000] [1]]
CHNL#S 2:4: [ANGL101063 [MYST G7 22.000] [1]] [ANGL156661 [DARL G1 22.000] [1]]
CHNL#S 1:4: [ANGL100060 [MIS GT1 18.000] [1]] [ANGL156661 [DARL G1 22.000] [1]]
100.00
-100.0
0.0
1.0000
2.0000
3.0000
4.0000
5.0000
6.0000
7.0000
8.0000
9.0000
10.000
TIME (SECONDS)
TUE, JAN 27 2009 15:57
"NE,NY,NB ANGLE"

2013 WINTER PEAK STORA 167, NS LOAD 2371
NS-NB=-200; NB-NE=300; CBX=543; ONI=773 ONS=863
1 PHASE FAULT ON BUS B61 AT HOPEWELL
CLEARS BUS AND TRANSFORMER, OPEN ENDS L8003 TRIP L8004
FILE: g101-79N-B61-SPS_delay_nrecl-2013WP-NS-import-200.out
CHNL# 59: [POWER199169 [TUFTCV3 14.400] [3]]
CHNL# 56: [POWER199086 [TRENTON613.800] [6]]
CHNL# 55: [POWER199085 [TRENTN5 13.800] [5]]
CHNL# 54: [POWER199061 [TMP1 STO13.800] [1]]
CHNL# 52: [POWER199043 [ACONIG1 20.000] [1]]
CHNL# 50: [POWER199001 [LINGAN1 14.400] [1]]
2.5000
-1.500
0.0
1.0000
2.0000
3.0000
4.0000
5.0000
6.0000
7.0000
8.0000
9.0000
10.000
TIME (SECONDS)
TUE, JAN 27 2009 15:57
NS MW

2013 WINTER PEAK STORA 167, NS LOAD 2371
NS-NB=-200; NB-NE=300; CBX=543; ONI=773 ONS=863
1 PHASE FAULT ON BUS B61 AT HOPEWELL
CLEARS BUS AND TRANSFORMER, OPEN ENDS L8003 TRIP L8004
FILE: g101-79N-B61-SPS_delay_nrecl-2013WP-NS-import-200.out
CHNL# 49: [POWER190472 [BLLDNG2 19.000] [1]]
CHNL# 45: [POWER190456 [LEPRG1 26.000] [1]]
CHNL# 44: [POWER190450 [MACTG1 13.800] [1]]
CHNL# 42: [POWER126652 [RAV 3 22.000] [1]]
CHNL# 41: [POWER101063 [MYST G7 22.000] [1]]
CHNL# 40: [POWER100060 [MIS GT1 18.000] [1]]
7.0000
4.0000
0.0
1.0000
2.0000
3.0000
4.0000
5.0000
6.0000
7.0000
8.0000
9.0000
10.000
TIME (SECONDS)
TUE, JAN 27 2009 15:57
"NE,NY,NB POWER"

NS WIND MV

NS WIND MW

"345KV VOLTAGE"

FREQUENCY HZ

2013 WINTER PEAK STORA 167, NS LOAD 2371
NS-NB=-200; NB-NE=300; CBX=543; ONI=773 ONS=863
1 PHASE FAULT ON BUS B61 AT HOPEWELL
CLEARS BUS AND TRANSFORMER, OPEN ENDS L8003 TRIP L8004
FILE: g101-79N-B61-SPS_delay_nrecl-2013WP-NS-import-200.out
CHNL# 146: [VOLT199280 [TUSKET A138.00]] 1.2000 0.70000
CHNL# 145: [VOLT199193 [HHWAS 138.00]] 1.2000 0.70000
CHNL# 144: [VOLT199165 [TUFTCOVE138.00]] 1.2000 0.70000
CHNL# 143: [VOLT199138 [SPRNGHIL138.00]] 1.2000 0.70000
CHNL# 142: [VOLT199090 [50N-TREN138.00]] 1.2000 0.70000
CHNL# 141: [VOLT199051 [HASTINGS138.00]] 1.2000 0.70000
0.0 1.0000 2.0000 3.0000 4.0000 5.0000 6.0000 7.0000 8.0000 9.0000 10.000
TIME (SECONDS)
TUE, JAN 27 2009 15:57
138KV BUS VOLTS

2013 WINTER PEAK STORA 167, NS LOAD 2371
NS-NB=-200; NB-NE=300; CBX=543; ONI=773 ONS=863
1 PHASE FAULT ON BUS B61 AT HOPEWELL
CLEARS BUS AND TRANSFORMER, OPEN ENDS L8003 TRIP L8004
FILE: g101-79N-B61-SPS_delay_nrecl-2013WP-NS-import-200.out
CHNL# 140: [VOLT199240 [BWATER A230.00]] 1.2000 0.70000
CHNL# 139: [VOLT199200 [BRUSHY 230.00]] 1.2000 0.70000
CHNL# 138: [VOLT199130 [ONSLOW 230.00]] 1.2000 0.70000
CHNL# 137: [VOLT199050 [HASTINGS230.00]] 1.2000 0.70000
CHNL# 136: [VOLT199044 [PT.ACONI230.00]] 1.2000 0.70000
CHNL# 135: [VOLT199000 [LINGAN 230.00]] 1.2000 0.70000
0.0 1.0000 2.0000 3.0000 4.0000 5.0000 6.0000 7.0000 8.0000 9.0000 10.000
TIME (SECONDS)
TUE, JAN 27 2009 15:57
230KV BUS VOLTS

2013 WINTER PEAK STORA 167, NS LOAD 2371
NS-NB=-200; NB-NE=300; CBX=543; ONI=773 ONS=863
1 PHASE FAULT ON BUS B61 AT HOPEWELL
CLEARS BUS AND TRANSFORMER, OPEN ENDS L8003 TRIP L8004
FILE: g101-79N-B61-SPS_delay_nrecl-2013WP-NS-import-200.out
CHNL# 217: [L6533NWV] 250.00 -250.0
CHNL# 215: [L6503MVI] 500.00 0.0
CHNL# 197: [L8003MVI] 1000.0 0.0
CHNL# 195: [L8004MVI] 500.00 0.0
CHNL# 193: [L8001MVI] 1000.0 -1000.
CHNL# 221: [L3001MVI] 1000.0 -1000.
0.0 1.0000 2.0000 3.0000 4.0000 5.0000 6.0000 7.0000 8.0000 9.0000 10.000
TIME (SECONDS)
TUE, JAN 27 2009 15:57
LINE FLOW MW

2013 WINTER PEAK STORA 167, NS LOAD 2371
NS-NB=-200; NB-NE=300; CBX=543; ONI=773 ONS=863
1 PHASE FAULT ON BUS B61 AT HOPEWELL
CLEARS BUS AND TRANSFORMER, OPEN ENDS L8003 TRIP L8004
FILE: g101-79N-B61-SPS_delay_nrecl-2013WP-NS-import-200.out
CHNL# 154: [IR141-DIGBYH69.0 VOLTS] 1.2000 0.70000
CHNL# 153: [IR137-STATIG25.0 VOLTS] 1.2000 0.70000
CHNL# 152: [IR114-GLENDH138.0 VOLTS] 1.2000 0.70000
CHNL# 151: [IR84-DALHOHV230.0 VOLTS] 1.2000 0.70000
CHNL# 150: [IR82_NUTBHV69.0 VOLTS] 1.2000 0.70000
CHNL# 149: [IR45_AMHERTP138.0 VOLTS] 1.2000 0.70000
0.0 1.0000 2.0000 3.0000 4.0000 5.0000 6.0000 7.0000 8.0000 9.0000 10.000
TIME (SECONDS)
TUE, JAN 27 2009 15:57
WIND BUS VOLTS